AUTHENTICATED
U.S. GOVERNMENT
INFORMATION
GPO

SUBCHAPTER C—AIR PROGRAMS (CONTINUED)

PART 63—NATIONAL EMISSION STANDARDS FOR HAZARDOUS AIR POLLUTANTS FOR SOURCE CATEGORIES (CONTINUED)

Subpart QQQ—National Emission Standards for Hazardous Air Pollutants for Primary Copper Smelting

WHAT THIS SUBPART COVERS

Sec.
63.1440 What is the purpose of this subpart?
63.1441 Am I subject to this subpart?
63.1442 What parts of my plant does this subpart cover?
63.1443 When do I have to comply with this subpart?

EMISSION LIMITATIONS AND WORK PRACTICE STANDARDS

63.1444 What emissions limitations and work practice standards must I meet for my copper concentrate dryers, smelting furnaces, slag cleaning vessels, and copper converter departments?
63.1445 What work practice standards must I meet for my fugitive dust sources?
63.1446 What alternative emission limitation may I meet for my combined gas streams?

OPERATION AND MAINTENANCE REQUIREMENTS

63.1447 What are my operation and maintenance requirements?

GENERAL COMPLIANCE REQUIREMENTS

63.1448 What are my general requirements for complying with this subpart?

INITIAL COMPLIANCE REQUIREMENTS

63.1449 By what date must I conduct performance tests or other initial compliance demonstrations?
63.1450 What test methods and other procedures must I use to demonstrate initial compliance with the emission limitations?
63.1451 How do I demonstrate initial compliance with the emission limitations, work practice standards, and operation and maintenance requirements that apply to me?

CONTINUOUS COMPLIANCE REQUIREMENTS

63.1452 What are my monitoring requirements?
63.1453 How do I demonstrate continuous compliance with the emission limitations, work practice standards, and operations and maintenance requirements that apply to me?

NOTIFICATIONS, REPORTS AND RECORDS

63.1454 What notifications must I submit and when?
63.1455 What reports must I submit and when?
63.1456 What records must I keep and how long must I keep my records?

OTHER REQUIREMENTS AND INFORMATION

63.1457 What part of the General Provisions apply to me?
63.1458 Who implements and enforces this subpart?
63.1459 What definitions apply to this subpart?

TABLE 1 TO SUBPART QQQ OF PART 63—APPLICABILITY OF GENERAL PROVISIONS TO SUBPART QQQ.
FIGURE 1 TO SUBPART QQQ OF PART 63—DATA SUMMARY SHEET FOR DETERMINATION OF AVERAGE OPACITY.

Subpart RRR—National Emission Standards for Hazardous Air Pollutants for Secondary Aluminum Production

GENERAL

63.1500 Applicability.
63.1501 Dates.
63.1502 [Reserved]
63.1503 Definitions.
63.1504 [Reserved]

EMISSION STANDARDS AND OPERATING REQUIREMENTS

63.1505 Emission standards for affected sources and emission nits.
63.1506 Operating requirements.
63.1507–63.1509 [Reserved]

MONITORING AND COMPLIANCE PROVISIONS

63.1510 Monitoring requirements.
63.1511 Performance test/compliance demonstration general requirements.
63.1512 Performance test/compliance demonstration requirements and procedures.
63.1513 Equations for determining compliance.
63.1514 Change of furnace classification.

NOTIFICATIONS, REPORTS, AND RECORDS

63.1515 Notifications.
63.1516 Reports.
63.1517 Records.

OTHER

63.1518 Applicability of general provisions.

sfrattini on LAPJZKW1R2 with $$_JOB
VerDate Sep<11>2014 09:16 Apr 04, 2023 Jkt 256165 PO 00000 Frm 00015 Fmt 8010 Sfmt 8010 Q:\40\256165.XXX PC31

63.1519 Implementation and enforcement.
63.1520 [Reserved]

TABLE 1 TO SUBPART RRR OF PART 63—EMISSION STANDARDS FOR NEW AND EXISTING AFFECTED SOURCES

TABLE 2 TO SUBPART RRR OF PART 63—SUMMARY OF OPERATING REQUIREMENTS FOR NEW AND EXISTING AFFECTED SOURCES AND EMISSION UNITS

TABLE 3 TO SUBPART RRR OF PART 63—SUMMARY OF MONITORING REQUIREMENTS FOR NEW AND EXISTING AFFECTED SOURCES AND EMISSION UNITS

APPENDIX A TO SUBPART RRR OF PART 63—GENERAL PROVISIONS APPLICABILITY TO SUBPART RRR

Subpart SSS [Reserved]

Subpart TTT—National Emission Standards for Hazardous Air Pollutants for Primary Lead Smelting

63.1541 Applicability.
63.1542 Definitions.
63.1543 Standards for process and process fugitive sources.
63.1544 Standards for fugitive dust sources.
63.1545 Compliance dates.
63.1546 Performance testing.
63.1547 Monitoring requirements.
63.1548 Notification requirements.
63.1549 Recordkeeping and reporting requirements.
63.1550 Delegation of authority.
63.1551 Affirmative defense for exceedance of emission limit during malfunction.

TABLE 1 TO SUBPART TTT OF PART 63—GENERAL PROVISIONS APPLICABILITY TO SUBPART TTT

Subpart UUU—National Emission Standards for Hazardous Air Pollutants for Petroleum Refineries: Catalytic Cracking Units, Catalytic Reforming Units, and Sulfur Recovery Units

WHAT THIS SUBPART COVERS

63.1560 What is the purpose of this subpart?
63.1561 Am I subject to this subpart?
63.1562 What parts of my plant are covered by this subpart?
63.1563 When do I have to comply with this subpart?

CATALYTIC CRACKING UNITS, CATALYTIC REFORMING UNITS, SULFUR RECOVERY UNITS, AND BYPASS LINES

63.1564 What are my requirements for metal HAP emissions from catalytic cracking units?
63.1565 What are my requirements for organic HAP emissions from catalytic cracking units?
63.1566 What are my requirements for organic HAP emissions from catalytic reforming units?
63.1567 What are my requirements for inorganic HAP emissions from catalytic reforming units?
63.1568 What are my requirements for HAP emissions from sulfur recovery units?
63.1569 What are my requirements for HAP emissions from bypass lines?

GENERAL COMPLIANCE REQUIREMENTS

63.1570 What are my general requirements for complying with this subpart?
63.1571 How and when must I conduct a performance test or other initial compliance demonstration?
63.1572 What are my monitoring installation, operation, and maintenance requirements?
63.1573 What are my monitoring alternatives?

NOTIFICATIONS, REPORTS, AND RECORDS

63.1574 What notifications must I submit and when?
63.1575 What reports must I submit and when?
63.1576 What records must I keep, in what form, and for how long?

OTHER REQUIREMENTS AND INFORMATION

63.1577 What parts of the General Provisions apply to me?
63.1578 Who implements and enforces this subpart?
63.1579 What definitions apply to this subpart?

TABLE 1 TO SUBPART UUU OF PART 63—METAL HAP EMISSION LIMITS FOR CATALYTIC CRACKING UNITS

TABLE 2 TO SUBPART UUU OF PART 63—OPERATING LIMITS FOR METAL HAP EMISSIONS FROM CATALYTIC CRACKING UNITS

TABLE 3 TO SUBPART UUU OF PART 63—CONTINUOUS MONITORING SYSTEMS FOR METAL HAP EMISSIONS FROM CATALYTIC CRACKING UNITS

TABLE 4 TO SUBPART UUU OF PART 63—REQUIREMENTS FOR PERFORMANCE TESTS FOR METAL HAP EMISSIONS FROM CATALYTIC CRACKING UNITS

TABLE 5 TO SUBPART UUU OF PART 63—INITIAL COMPLIANCE WITH METAL HAP EMISSION LIMITS FOR CATALYTIC CRACKING UNITS

TABLE 6 TO SUBPART UUU OF PART 63—CONTINUOUS COMPLIANCE WITH METAL HAP EMISSION LIMITS FOR CATALYTIC CRACKING UNITS

TABLE 7 TO SUBPART UUU OF PART 63—CONTINUOUS COMPLIANCE WITH OPERATING LIMITS FOR METAL HAP EMISSIONS FROM CATALYTIC CRACKING UNITS

sfrattini on LAPJZKW1R2 with $$_JOB
VerDate Sep<11>2014 09:16 Apr 04, 2023 Jkt 256165 PO 00000 Frm 00016 Fmt 8010 Sfmt 8010 Q:\40\256165.XXX PC31

TABLE 8 TO SUBPART UUU OF PART 63—ORGANIC HAP EMISSION LIMITS FOR CATALYTIC CRACKING UNITS
TABLE 9 TO SUBPART UUU OF PART 63—OPERATING LIMITS FOR ORGANIC HAP EMISSIONS FROM CATALYTIC CRACKING UNITS
TABLE 10 TO SUBPART UUU OF PART 63—CONTINUOUS MONITORING SYSTEMS FOR ORGANIC HAP EMISSIONS FROM CATALYTIC CRACKING UNITS
TABLE 11 TO SUBPART UUU OF PART 63—REQUIREMENTS FOR PERFORMANCE TESTS FOR ORGANIC HAP EMISSIONS FROM CATALYTIC CRACKING UNITS NOT SUBJECT TO NEW SOURCE PERFORMANCE STANDARD (NSPS) FOR CARBON MONOXIDE (CO)
TABLE 12 TO SUBPART UUU OF PART 63—INITIAL COMPLIANCE WITH ORGANIC HAP EMISSION LIMITS FOR CATALYTIC CRACKING UNITS
TABLE 13 TO SUBPART UUU OF PART 63—CONTINUOUS COMPLIANCE WITH ORGANIC HAP EMISSION LIMITS FOR CATALYTIC CRACKING UNITS
TABLE 14 TO SUBPART UUU OF PART 63—CONTINUOUS COMPLIANCE WITH OPERATING LIMITS FOR ORGANIC HAP EMISSIONS FROM CATALYTIC CRACKING UNITS
TABLE 15 TO SUBPART UUU OF PART 63—ORGANIC HAP EMISSION LIMITS FOR CATALYTIC REFORMING UNITS
TABLE 16 TO SUBPART UUU OF PART 63—OPERATING LIMITS FOR ORGANIC HAP EMISSIONS FROM CATALYTIC REFORMING UNITS
TABLE 17 TO SUBPART UUU OF PART 63—CONTINUOUS MONITORING SYSTEMS FOR ORGANIC HAP EMISSIONS FROM CATALYTIC REFORMING UNITS
TABLE 18 TO SUBPART UUU OF PART 63—REQUIREMENTS FOR PERFORMANCE TESTS FOR ORGANIC HAP EMISSIONS FROM CATALYTIC REFORMING UNITS
TABLE 19 TO SUBPART UUU OF PART 63—INITIAL COMPLIANCE WITH ORGANIC HAP EMISSION LIMITS FOR CATALYTIC REFORMING UNITS
TABLE 20 TO SUBPART UUU OF PART 63—CONTINUOUS COMPLIANCE WITH ORGANIC HAP EMISSION LIMITS FOR CATALYTIC REFORMING UNITS
TABLE 21 TO SUBPART UUU OF PART 63—CONTINUOUS COMPLIANCE WITH OPERATING LIMITS FOR ORGANIC HAP EMISSIONS FROM CATALYTIC REFORMING UNITS
TABLE 22 TO SUBPART UUU OF PART 63—INORGANIC HAP EMISSION LIMITS FOR CATALYTIC REFORMING UNITS
TABLE 23 TO SUBPART UUU OF PART 63—OPERATING LIMITS FOR INORGANIC HAP EMISSION LIMITATIONS FOR CATALYTIC REFORMING UNITS
TABLE 24 TO SUBPART UUU OF PART 63—CONTINUOUS MONITORING SYSTEMS FOR INORGANIC HAP EMISSIONS FROM CATALYTIC REFORMING UNITS
TABLE 25 TO SUBPART UUU OF PART 63—REQUIREMENTS FOR PERFORMANCE TESTS FOR INORGANIC HAP EMISSIONS FROM CATALYTIC REFORMING UNITS
TABLE 26 TO SUBPART UUU OF PART 63—INITIAL COMPLIANCE WITH INORGANIC HAP EMISSION LIMITS FOR CATALYTIC REFORMING UNITS
TABLE 27 TO SUBPART UUU OF PART 63—CONTINUOUS COMPLIANCE WITH INORGANIC HAP EMISSION LIMITS FOR CATALYTIC REFORMING UNITS
TABLE 28 TO SUBPART UUU OF PART 63—CONTINUOUS COMPLIANCE WITH OPERATING LIMITS FOR INORGANIC HAP EMISSIONS FROM CATALYTIC REFORMING UNITS
TABLE 29 TO SUBPART UUU OF PART 63—HAP EMISSION LIMITS FOR SULFUR RECOVERY UNITS
TABLE 30 TO SUBPART UUU OF PART 63—OPERATING LIMITS FOR HAP EMISSIONS FROM SULFUR RECOVERY UNITS
TABLE 31 TO SUBPART UUU OF PART 63—CONTINUOUS MONITORING SYSTEMS FOR HAP EMISSIONS FROM SULFUR RECOVERY UNITS
TABLE 32 TO SUBPART UUU OF PART 63—REQUIREMENTS FOR PERFORMANCE TESTS FOR HAP EMISSIONS FROM SULFUR RECOVERY UNITS NOT SUBJECT TO THE NEW SOURCE PERFORMANCE STANDARDS (NSPS) FOR SULFUR OXIDES
TABLE 33 TO SUBPART UUU OF PART 63—INITIAL COMPLIANCE WITH HAP EMISSION LIMITS FOR SULFUR RECOVERY UNITS
TABLE 34 TO SUBPART UUU OF PART 63—CONTINUOUS COMPLIANCE WITH HAP EMISSION LIMITS FOR SULFUR RECOVERY UNITS
TABLE 35 TO SUBPART UUU OF PART 63—CONTINUOUS COMPLIANCE WITH OPERATING LIMITS FOR HAP EMISSIONS FROM SULFUR RECOVERY UNITS
TABLE 36 TO SUBPART UUU OF PART 63—WORK PRACTICE STANDARDS FOR HAP EMISSIONS FROM BYPASS LINES
TABLE 37 TO SUBPART UUU OF PART 63—REQUIREMENTS FOR PERFORMANCE TESTS FOR BYPASS LINES
TABLE 38 TO SUBPART UUU OF PART 63—INITIAL COMPLIANCE WITH WORK PRACTICE STANDARDS FOR HAP EMISSIONS FROM BYPASS LINES
TABLE 39 TO SUBPART UUU OF PART 63—CONTINUOUS COMPLIANCE WITH WORK PRACTICE STANDARDS FOR HAP EMISSIONS FROM BYPASS LINES
TABLE 40 TO SUBPART UUU OF PART 63—REQUIREMENTS FOR INSTALLATION, OPERATION, AND MAINTENANCE OF CONTINUOUS OPACITY MONITORING SYSTEMS AND CONTINUOUS EMISSION MONITORING SYSTEMS
TABLE 41 TO SUBPART UUU OF PART 63—REQUIREMENTS FOR INSTALLATION, OPERATION, AND MAINTENANCE OF CONTINUOUS PARAMETER MONITORING SYSTEMS
TABLE 42 TO SUBPART UUU OF PART 63—ADDITIONAL INFORMATION FOR INITIAL NOTIFICATION OF COMPLIANCE STATUS
TABLE 43 TO SUBPART UUU OF PART 63—REQUIREMENTS FOR REPORTS

sfrattini on LAPJZKW1R2 with $$_JOB
VerDate Sep<11>2014 09:16 Apr 04, 2023 Jkt 256165 PO 00000 Frm 00017 Fmt 8010 Sfmt 8010 Q:\40\256165.XXX PC31

TABLE 44 TO SUBPART UUU OF PART 63—APPLICABILITY OF NESHAP GENERAL PROVISIONS TO SUBPART UUU
APPENDIX A TO SUBPART UUU OF PART 63—DETERMINATION OF METAL CONCENTRATION ON CATALYST PARTICLES (INSTRUMENTAL ANALYZER PROCEDURE)

Subpart VVV—National Emission Standards for Hazardous Air Pollutants: Publicly Owned Treatment Works

APPLICABILITY

63.1580 Am I subject to this subpart?
63.1581 Does the subpart distinguish between different types of POTW treatment plants?

REQUIREMENTS FOR GROUP 1 POTW TREATMENT PLANTS

63.1582 [Reserved]
63.1583 What are the emission points and control requirements for a Group 1 POTW treatment plant?
63.1584 [Reserved]
63.1585 How does a Group 1 POTW treatment plant demonstrate compliance?

REQUIREMENTS FOR GROUP 1 AND GROUP 2 POTW TREATMENT PLANTS

63.1586 What are the emission points and control requirements for a Group 1 or Group 2 POTW?
63.1587 When do I have to comply?
63.1588 How do Group 1 and Group 2 POTW treatment plants demonstrate compliance?
63.1589 What records must I keep?
63.1590 What reports must I submit?
63.1591 What are my notification requirements?
63.1592 Which General Provisions apply to my POTW treatment plant?
63.1593 [Reserved]
63.1594 Who enforces this subpart?
63.1595 List of definitions.
TABLE 1 TO SUBPART VVV OF PART 63—APPLICABILITY OF 40 CFR PART 63 GENERAL PROVISIONS TO SUBPART VVV
TABLE 2 TO SUBPART VVV OF PART 63—COMPLIANCE DATES AND REQUIREMENTS

Subpart WWW [Reserved]

Subpart XXX—National Emission Standards for Hazardous Air Pollutants for Ferroalloys Production: Ferromanganese and Silicomanganese

63.1620 Am I subject to this subpart?
63.1621 What are my compliance dates?
63.1622 What definitions apply to this subpart?
63.1623 What are the emissions standards for new, reconstructed and existing facilities?
63.1624 What are the operational and work practice standards for new, reconstructed, and existing facilities?
63.1625 What are the performance test and compliance requirements for new, reconstructed, and existing facilities?
63.1626 What monitoring requirements must I meet?
63.1627 What notification requirements must I meet?
63.1628 What recordkeeping and reporting requirements must I meet?
63.1629 Who implements and enforces this subpart?
63.1630–63.1649 [Reserved]
63.1650 Applicability and compliance dates.
63.1651 Definitions.
63.1652 Emission standards.
63.1653 Opacity standards.
63.1654 Operational and work practice standards.
63.1655 Maintenance requirements.
63.1656 Performance testing, test methods, and compliance demonstrations.
63.1657 Monitoring requirements.
63.1658 Notification requirements.
63.1659 Reporting requirements.
63.1660 Recordkeeping requirements.
63.1661 Implementation and enforcement.
63.1662–63.1679 [Reserved]
TABLE 1 TO SUBPART XXX OF PART 63—GENERAL PROVISIONS APPLICABILITY TO SUBPART XXX

Subpart AAAA—National Emission Standards for Hazardous Air Pollutants: Municipal Solid Waste Landfills

WHAT THIS SUBPART COVERS

63.1930 What is the purpose of this subpart?
63.1935 Am I subject to this subpart?
63.1940 What is the affected source of this subpart?
63.1945 When do I have to comply with this subpart?
63.1947 When do I have to comply with this subpart if I own or operate a bioreactor?
63.1950 When am I no longer required to comply with this subpart?
63.1952 When am I no longer required to comply with the requirements of this subpart if I own or operate a bioreactor?

STANDARDS

63.1955 What requirements must I meet?
63.1957 Requirements for gas collection and control system installation and removal
63.1958 Operational standards for collection and control systems.
63.1959 NMOC calculation procedures.
63.1960 Compliance provisions.
63.1961 Monitoring of operations.
63.1962 Specifications for active collection systems.

sfrattini on LAPJZKW1R2 with $$_JOB
VerDate Sep<11>2014 09:16 Apr 04, 2023 Jkt 256165 PO 00000 Frm 00018 Fmt 8010 Sfmt 8010 Q:\40\256165.XXX PC31

GENERAL AND CONTINUING COMPLIANCE REQUIREMENTS

63.1964 How is compliance determined?
63.1965 What is a deviation?
63.1975 How do I calculate the 3-hour block average used to demonstrate compliance?

NOTIFICATIONS, RECORDS, AND REPORTS

63.1981 What reports must I submit?
63.1982 What records and reports must I submit and keep for bioreactors or liquids addition other than leachate?
63.1983 What records must I keep?

OTHER REQUIREMENTS AND INFORMATION

63.1985 Who enforces this subpart?
63.1990 What definitions apply to this subpart?
TABLE 1 TO SUBPART AAAA OF PART 63—APPLICABILITY OF NESHAP GENERAL PROVISIONS TO SUBPART AAAA

Subpart BBBB [Reserved]

Subpart CCCC—National Emission Standards for Hazardous Air Pollutants: Manufacturing of Nutritional Yeast

WHAT THIS SUBPART COVERS

63.2130 What is the purpose of this subpart?
63.2131 Am I subject to this subpart?
63.2132 What parts of my plant does this subpart cover?
63.2133 When do I have to comply with this subpart?

EMISSION LIMITATIONS

63.2140 What emission limitations must I meet?

GENERAL COMPLIANCE REQUIREMENTS

63.2150 What are my general requirements for complying with this subpart?

TESTING AND INITIAL COMPLIANCE REQUIREMENTS

63.2160 By what date must I conduct an initial compliance demonstration?
63.2161 What performance tests and other procedures must I use if I monitor brew ethanol?
63.2162 When must I conduct subsequent performance tests if I monitor brew ethanol?
63.2163 If I monitor fermenter exhaust, what are my monitoring installation, operation, and maintenance requirements?
63.2164 If I monitor brew ethanol, what are my monitoring installation, operation, and maintenance requirements?
63.2165 How do I demonstrate initial compliance with the emission limitations if I monitor fermenter exhaust?

CONTINUOUS COMPLIANCE REQUIREMENTS

63.2170 How do I monitor and collect data to demonstrate continuous compliance?
63.2171 How do I demonstrate continuous compliance with the emission limitations?

NOTIFICATION, REPORTS, AND RECORDS

63.2180 What notifications must I submit and when?
63.2181 What reports must I submit and when?
63.2182 What records must I keep?
63.2183 In what form and how long must I keep my records?

OTHER REQUIREMENTS AND INFORMATION

63.2190 What parts of the General Provisions apply to me?
63.2191 Who implements and enforces this subpart?
63.2192 What definitions apply to this subpart?
TABLE 1 TO SUBPART CCCC OF PART 63—EMISSION LIMITATIONS
TABLE 2 TO SUBPART CCCC OF PART 63—REQUIREMENTS FOR PERFORMANCE TESTS IF YOU MONITOR BREW ETHANOL
TABLE 3 TO SUBPART CCCC OF PART 63—INITIAL COMPLIANCE WITH EMISSION LIMITATIONS
TABLE 4 TO SUBPART CCCC OF PART 63—CONTINUOUS COMPLIANCE WITH EMISSION LIMITATIONS
TABLE 5 TO SUBPART CCCC OF PART 63—REQUIREMENTS FOR REPORTS
TABLE 6 TO SUBPART CCCC OF PART 63—APPLICABILITY OF GENERAL PROVISIONS TO SUBPART CCCC
TABLE 7 TO SUBPART CCCC OF PART 63—EMISSION LIMITATION APPLICABILITY TIMELINE
TABLE 8 TO SUBPART CCCC OF PART 63—MONITORING SYSTEM REQUIREMENTS TIMELINE

Subpart DDDD—National Emission Standards for Hazardous Air Pollutants: Plywood and Composite Wood Products

WHAT THIS SUBPART COVERS

63.2230 What is the purpose of this subpart?
63.2231 Does this subpart apply to me?
63.2232 What parts of my plant does this subpart cover?
63.2233 When do I have to comply with this subpart?

COMPLIANCE OPTIONS, OPERATING REQUIREMENTS, AND WORK PRACTICE REQUIREMENTS

63.2240 What are the compliance options and operating requirements and how must I meet them?
63.2241 What are the work practice requirements and how must I meet them?

sfrattini on LAPJZKW1R2 with $$_JOB
VerDate Sep<11>2014 09:16 Apr 04, 2023 Jkt 256165 PO 00000 Frm 00019 Fmt 8010 Sfmt 8010 Q:\40\256165.XXX PC31

GENERAL COMPLIANCE REQUIREMENTS

63.2250 What are the general requirements?
63.2251 What are the requirements for the routine control device maintenance exemption?
63.2252 What are the requirements for process units that have no control or work practice requirements?

INITIAL COMPLIANCE REQUIREMENTS

63.2260 How do I demonstrate initial compliance with the compliance options, operating requirements, and work practice requirements?
63.2261 By what date must I conduct performance tests or other initial compliance demonstrations?
63.2262 How do I conduct performance tests and establish operating requirements?
63.2263 Initial compliance demonstration for a dry rotary dryer.
63.2264 Initial compliance demonstration for a hardwood veneer dryer.
63.2265 Initial compliance demonstration for a softwood veneer dryer.
63.2266 Initial compliance demonstration for a veneer redryer.
63.2267 Initial compliance demonstration for a reconstituted wood product press or board cooler.
63.2268 Initial compliance demonstration for a wet control device.
63.2269 What are my monitoring installation, operation, and maintenance requirements?

CONTINUOUS COMPLIANCE REQUIREMENTS

63.2270 How do I monitor and collect data to demonstrate continuous compliance?
63.2271 How do I demonstrate continuous compliance with the compliance options, operating requirements, and work practice requirements?

NOTIFICATIONS, REPORTS, AND RECORDS

63.2280 What notifications must I submit and when?
63.2281 What reports must I submit and when?
63.2282 What records must I keep?
63.2283 In what form and how long must I keep my records?

OTHER REQUIREMENTS AND INFORMATION

63.2290 What parts of the general provisions apply to me?
63.2291 Who implements and enforces this subpart?
63.2292 What definitions apply to this subpart?

TABLE 1A TO SUBPART DDDD OF PART 63—PRODUCTION-BASED COMPLIANCE OPTIONS
TABLE 1B TO SUBPART DDDD OF PART 63—ADD-ON CONTROL SYSTEMS COMPLIANCE OPTIONS
TABLE 2 TO SUBPART DDDD OF PART 63—OPERATING REQUIREMENTS
TABLE 3 TO SUBPART DDDD OF PART 63—WORK PRACTICE REQUIREMENTS
TABLE 4 TO SUBPART DDDD OF PART 63—REQUIREMENTS FOR PERFORMANCE TESTS
TABLE 5 TO SUBPART DDDD OF PART 63—PERFORMANCE TESTING AND INITIAL COMPLIANCE DEMONSTRATIONS FOR THE COMPLIANCE OPTIONS AND OPERATING REQUIREMENTS
TABLE 6 TO SUBPART DDDD OF PART 63—INITIAL COMPLIANCE DEMONSTRATIONS FOR WORK PRACTICE REQUIREMENTS
TABLE 7 TO SUBPART DDDD OF PART 63—CONTINUOUS COMPLIANCE WITH THE COMPLIANCE OPTIONS AND OPERATING REQUIREMENTS
TABLE 8 TO SUBPART DDDD OF PART 63—CONTINUOUS COMPLIANCE WITH THE WORK PRACTICE REQUIREMENTS
TABLE 9 TO SUBPART DDDD OF PART 63—REQUIREMENTS FOR REPORTS
TABLE 10 TO SUBPART DDDD OF PART 63—APPLICABILITY OF GENERAL PROVISIONS TO THIS SUBPART
APPENDIX A TO SUBPART DDDD OF PART 63—ALTERNATIVE PROCEDURE TO DETERMINE CAPTURE EFFICIENCY FROM ENCLOSURES AROUND HOT PRESSES IN THE PLYWOOD AND COMPOSITE WOOD PRODUCTS INDUSTRY USING SULFUR HEXAFLUORIDE TRACER GAS

Subpart EEEE—National Emission Standards for Hazardous Air Pollutants: Organic Liquids Distribution (Non-Gasoline)

WHAT THIS SUBPART COVERS

63.2330 What is the purpose of this subpart?
63.2334 Am I subject to this subpart?
63.2338 What parts of my plant does this subpart cover?
63.2342 When do I have to comply with this subpart?
63.2343 What are my requirements for emission sources not requiring control?

EMISSION LIMITATIONS, OPERATING LIMITS, AND WORK PRACTICE STANDARDS

63.2346 What emission limitations, operating limits, and work practice standards must I meet?

GENERAL COMPLIANCE REQUIREMENTS

63.2350 What are my general requirements for complying with this subpart?

TESTING AND INITIAL COMPLIANCE REQUIREMENTS

63.2354 What performance tests, design evaluations, and performance evaluations must I conduct?
63.2358 By what date must I conduct performance tests or other initial compliance demonstrations?

sfrattini on LAPJZKW1R2 with $$_JOB
VerDate Sep<11>2014 09:16 Apr 04, 2023 Jkt 256165 PO 00000 Frm 00020 Fmt 8010 Sfmt 8010 Q:\40\256165.XXX PC31

63.2362 When must I conduct subsequent performance tests?
63.2366 What are my monitoring installation, operation, and maintenance requirements?
63.2370 How do I demonstrate initial compliance with the emission limitations, operating limits, and work practice standards?

CONTINUOUS COMPLIANCE REQUIREMENTS

63.2374 When do I monitor and collect data to demonstrate continuous compliance and how do I use the collected data?
63.2378 How do I demonstrate continuous compliance with the emission limitations, operating limits, and work practice standards?
63.2380 What are my requirements for certain flares?

NOTIFICATIONS, REPORTS, AND RECORDS

63.2382 What notifications must I submit and when and what information should be submitted?
63.2386 What reports must I submit and when and what information is to be submitted in each?
63.2390 What records must I keep?
63.2394 In what form and how long must I keep my records?

OTHER REQUIREMENTS AND INFORMATION

63.2396 What compliance options do I have if part of my plant is subject to both this subpart and another subpart?
63.2398 What parts of the General Provisions apply to me?
63.2402 Who implements and enforces this subpart?
63.2406 What definitions apply to this subpart?

TABLE 1 TO SUBPART EEEE OF PART 63—ORGANIC HAZARDOUS AIR POLLUTANTS
TABLE 2 TO SUBPART EEEE OF PART 63—EMISSION LIMITS
TABLE 2B TO SUBPART EEEE OF PART 63—EMISSION LIMITS FOR STORAGE TANKS AT CERTAIN EXISTING AFFECTED SOURCES
TABLE 3 TO SUBPART EEEE OF PART 63—OPERATING LIMITS—HIGH THROUGHPUT TRANSFER RACKS
TABLE 4 TO SUBPART EEEE OF PART 63—WORK PRACTICE STANDARDS
TABLE 5 TO SUBPART EEEE OF PART 63—REQUIREMENTS FOR PERFORMANCE TESTS AND DESIGN EVALUATIONS
TABLE 6 TO SUBPART EEEE OF PART 63—INITIAL COMPLIANCE WITH EMISSION LIMITS
TABLE 7 TO SUBPART EEEE OF PART 63—INITIAL COMPLIANCE WITH WORK PRACTICE STANDARDS
TABLE 8 TO SUBPART EEEE OF PART 63—CONTINUOUS COMPLIANCE WITH EMISSION LIMITS
TABLE 9 TO SUBPART EEEE OF PART 63—CONTINUOUS COMPLIANCE WITH OPERATING LIMITS—HIGH THROUGHPUT TRANSFER RACKS
TABLE 10 TO SUBPART EEEE OF PART 63—CONTINUOUS COMPLIANCE WITH WORK PRACTICE STANDARDS
TABLE 11 TO SUBPART EEEE OF PART 63—REQUIREMENTS FOR REPORTS
TABLE 12 TO SUBPART EEEE OF PART 63—APPLICABILITY OF GENERAL PROVISIONS TO SUBPART EEEE

Subpart FFFF—National Emission Standards for Hazardous Air Pollutants: Miscellaneous Organic Chemical Manufacturing

WHAT THIS SUBPART COVERS

63.2430 What is the purpose of this subpart?
63.2435 Am I subject to the requirements in this subpart?
63.2440 What parts of my plant does this subpart cover?

COMPLIANCE DATES

63.2445 When do I have to comply with this subpart?

EMISSION LIMITS, WORK PRACTICE STANDARDS, AND COMPLIANCE REQUIREMENTS

63.2450 What are my general requirements for complying with this subpart?
63.2455 What requirements must I meet for continuous process vents?
63.2460 What requirements must I meet for batch process vents?
63.2465 What requirements must I meet for process vents that emit hydrogen halide and halogen HAP or HAP metals?
63.2470 What requirements must I meet for storage tanks?
63.2475 What requirements must I meet for transfer racks?
63.2480 What requirements must I meet for equipment leaks?
63.2485 What requirements must I meet for wastewater streams and liquid streams in open systems within an MCPU?
63.2490 What requirements must I meet for heat exchange systems?
63.2492 How do I determine whether my process vent, storage tank, or equipment is in ethylene oxide service?
63.2493 What requirements must I meet for process vents, storage tanks, or equipment that are in ethylene oxide service?

ALTERNATIVE MEANS OF COMPLIANCE

63.2495 How do I comply with the pollution prevention standard?
63.2500 How do I comply with emissions averaging?
63.2505 How do I comply with the alternative standard?

sfrattini on LAPJZKW1R2 with $$_JOB
VerDate Sep<11>2014 09:16 Apr 04, 2023 Jkt 256165 PO 00000 Frm 00021 Fmt 8010 Sfmt 8010 Q:\40\256165.XXX PC31

NOTIFICATIONS, REPORTS, AND RECORDS

63.2515 What notifications must I submit and when?
63.2520 What reports must I submit and when?
63.2525 What records must I keep?

OTHER REQUIREMENTS AND INFORMATION

63.2535 What compliance options do I have if part of my plant is subject to both this subpart and another subpart?
63.2540 What parts of the General Provisions apply to me?
63.2545 Who implements and enforces this subpart?
63.2550 What definitions apply to this subpart?

TABLE 1 TO SUBPART FFFF OF PART 63—EMISSION LIMITS AND WORK PRACTICE STANDARDS FOR CONTINUOUS PROCESS VENTS
TABLE 2 TO SUBPART FFFF OF PART 63—EMISSION LIMITS AND WORK PRACTICE STANDARDS FOR BATCH PROCESS VENTS
TABLE 3 TO SUBPART FFFF OF PART 63—EMISSION LIMITS FOR HYDROGEN HALIDE AND HALOGEN HAP EMISSIONS OR HAP METALS EMISSIONS FROM PROCESS VENTS
TABLE 4 TO SUBPART FFFF OF PART 63—EMISSION LIMITS FOR STORAGE TANKS
TABLE 5 TO SUBPART FFFF OF PART 63—EMISSION LIMITS AND WORK PRACTICE STANDARDS FOR TRANSFER RACKS
TABLE 6 TO SUBPART FFFF OF PART 63—REQUIREMENTS FOR EQUIPMENT LEAKS
TABLE 7 TO SUBPART FFFF OF PART 63—REQUIREMENTS FOR WASTEWATER STREAMS AND LIQUID STREAMS IN OPEN SYSTEMS WITHIN AN MCPU
TABLE 8 TO SUBPART FFFF OF PART 63—PARTIALLY SOLUBLE HAZARDOUS AIR POLLUTANTS
TABLE 9 TO SUBPART FFFF OF PART 63—SOLUBLE HAZARDOUS AIR POLLUTANTS
TABLE 10 TO SUBPART FFFF OF PART 63—WORK PRACTICE STANDARDS FOR HEAT EXCHANGE SYSTEMS
TABLE 11 TO SUBPART FFFF OF PART 63—REQUIREMENTS FOR REPORTS
TABLE 12 TO SUBPART FFFF OF PART 63—APPLICABILITY OF GENERAL PROVISIONS TO SUBPART FFFF

Subpart GGGG—National Emission Standards for Hazardous Air Pollutants: Solvent Extraction for Vegetable Oil Production

WHAT THIS SUBPART COVERS

63.2830 What is the purpose of this subpart?
63.2831 Where can I find definitions of key words used in this subpart?
63.2832 Am I subject to this subpart?
63.2833 Is my source categorized as existing or new?
63.2834 When do I have to comply with the standards in this subpart?

STANDARDS

63.2840 What emission requirements must I meet?

COMPLIANCE REQUIREMENTS

63.2850 How do I comply with the hazardous air pollutant emission standards?
63.2851 What is a plan for demonstrating compliance?
63.2852 What is a startup, shutdown, and malfunction plan?
63.2853 How do I determine the actual solvent loss?
63.2854 How do I determine the weighted average volume fraction of HAP in the actual solvent loss?
63.2855 How do I determine the quantity of oilseed processed?

NOTIFICATIONS, REPORTS, AND RECORDS

63.2860 What notifications must I submit and when?
63.2861 What reports must I submit and when?
63.2862 What records must I keep?
63.2863 In what form and how long must I keep my records?

OTHER REQUIREMENTS AND INFORMATION

63.2870 What parts of the General Provisions apply to me?
63.2871 Who implements and enforces this subpart?
63.2872 What definitions apply to this subpart?

Subpart HHHH—National Emission Standards for Hazardous Air Pollutants for Wet-Formed Fiberglass Mat Production

WHAT THIS SUBPART COVERS

63.2980 What is the purpose of this subpart?
63.2981 Does this subpart apply to me?
63.2982 What parts of my plant does this subpart cover?

EMISSION LIMITATIONS

63.2983 What emission limits must I meet?
63.2984 What operating limits must I meet?
63.2985 When do I have to comply with these standards?
63.2986 How do I comply with the standards?

OPERATION, MAINTENANCE, AND MONITORING PLAN

63.2987 What must my operation, maintenance, and monitoring (OMM) plan include?
63.2988 [Reserved]
63.2989 How do I change my (OMM) plan?
63.2990 Can I conduct short-term experimental production runs that cause parameters to deviate from operating limits?

sfrattini on LAPJZKW1R2 with $$_JOB
VerDate Sep<11>2014 09:16 Apr 04, 2023 Jkt 256165 PO 00000 Frm 00022 Fmt 8010 Sfmt 8010 Q:\40\256165.XXX PC31

TESTING AND INITIAL COMPLIANCE REQUIREMENTS

63.2991 When must I conduct performance tests?
63.2992 How do I conduct a performance test?
63.2993 What test methods must I use in conducting performance tests?
63.2994 How do I verify the performance of monitoring equipment?
63.2995 What equations must I use to determine compliance?

MONITORING REQUIREMENTS

63.2996 What must I monitor?
63.2997 What are the requirements for monitoring devices?

NOTIFICATIONS, REPORTS, AND RECORDS

63.2998 What records must I maintain?
63.2999 In what form and for how long must I maintain records?
63.3000 What notifications and reports must I submit?

OTHER REQUIREMENTS AND INFORMATION

63.3001 What sections of the general provisions apply to me?
63.3002 Who implements and enforces this subpart?
63.3003 [Reserved]
63.3004 What definitions apply to this subpart?
63.3005–63.3079 [Reserved]

TABLE 1 TO SUBPART HHHH OF PART 63—MINIMUM REQUIREMENTS FOR MONITORING AND RECORDKEEPING

TABLE 2 TO SUBPART HHHH OF PART 63—APPLICABILITY OF GENERAL PROVISIONS (40 CFR PART 63, SUBPART A) TO SUBPART HHHH

APPENDIX A TO SUBPART HHHH OF PART 63—METHOD FOR DETERMINING FREE-FORMALDEHYDE IN UREA-FORMALDEHYDE RESINS BY SODIUM SULFITE (ICED & COOLED)

APPENDIX B TO SUBPART HHHH OF PART 63—METHOD FOR THE DETERMINATION OF LOSS-ON-IGNITION

Subpart IIII—National Emission Standards for Hazardous Air Pollutants: Surface Coating of Automobiles and Light-Duty Trucks

WHAT THIS SUBPART COVERS

63.3080 What is the purpose of this subpart?
63.3081 Am I subject to this subpart?
63.3082 What parts of my plant does this subpart cover?
63.3083 When do I have to comply with this subpart?

EMISSION LIMITATIONS

63.3090 What emission limits must I meet for a new or reconstructed affected source?
63.3091 What emission limits must I meet for an existing affected source?
63.3092 How must I control emissions from my electrodeposition primer system if I want to comply with the combined primer-surfacer, topcoat, final repair, glass bonding primer, and glass bonding adhesive emission limit?
63.3093 What operating limits must I meet?
63.3094 What work practice standards must I meet?

GENERAL COMPLIANCE REQUIREMENTS

63.3100 What are my general requirements for complying with this subpart?
63.3101 What parts of the General Provisions apply to me?

NOTIFICATIONS, REPORTS, AND RECORDS

63.3110 What notifications must I submit?
63.3120 What reports must I submit?
63.3130 What records must I keep?
63.3131 In what form and for how long must I keep my records?

COMPLIANCE REQUIREMENTS FOR ADHESIVE, SEALER, AND DEADENER

63.3150 By what date must I conduct the initial compliance demonstration?
63.3151 How do I demonstrate initial compliance with the emission limitations?
63.3152 How do I demonstrate continuous compliance with the emission limitations?

COMPLIANCE REQUIREMENTS FOR THE COMBINED ELECTRODEPOSITION PRIMER, PRIMER-SURFACER, TOPCOAT, FINAL REPAIR, GLASS BONDING PRIMER, AND GLASS BONDING ADHESIVE EMISSION LIMITATIONS

63.3160 By what date must I conduct initial performance tests and other initial compliance demonstrations?
63.3161 How do I demonstrate initial compliance?
63.3162 [Reserved]
63.3163 How do I conduct periodic performance tests and demonstrate continuous compliance with the emission limitations?
63.3164 What are the general requirements for performance tests?
63.3165 How do I determine the emission capture system efficiency?
63.3166 How do I determine the add-on control device emission destruction or removal efficiency?
63.3167 How do I establish the add-on control device operating limits during performance tests?

sfrattini on LAPJZKW1R2 with $$_JOB
VerDate Sep<11>2014 09:16 Apr 04, 2023 Jkt 256165 PO 00000 Frm 00023 Fmt 8010 Sfmt 8010 Q:\40\256165.XXX PC31

63.3168 What are the requirements for continuous parameter monitoring system installation, operation, and maintenance?
63.3169 What are the requirements for a capture system or add-on control device which is not taken into account when demonstrating compliance with the applicable emission limitations?

COMPLIANCE REQUIREMENTS FOR THE COMBINED PRIMER-SURFACER, TOPCOAT, FINAL REPAIR, GLASS BONDING PRIMER, AND GLASS BONDING ADHESIVE EMISSION LIMITATIONS AND THE SEPARATE ELECTRODEPOSITION PRIMER EMISSION LIMITATIONS

63.3170 By what date must I conduct performance tests and other initial compliance demonstrations?
63.3171 How do I demonstrate initial compliance?
63.3172 [Reserved]
63.3173 How do I demonstrate continuous compliance with the emission limitations?
63.3174 What are the requirements for a capture system or add-on control device which is not taken into account when demonstrating compliance with the applicable emission limitations?

OTHER REQUIREMENTS AND INFORMATION

63.3175 Who implements and enforces this subpart?
63.3176 What definitions apply to this subpart?

TABLES TO SUBPART IIII OF PART 63

TABLE 1 TO SUBPART IIII OF PART 63—OPERATING LIMITS FOR CAPTURE SYSTEMS AND ADD-ON CONTROL DEVICES
TABLE 2 TO SUBPART IIII OF PART 63—APPLICABILITY OF GENERAL PROVISIONS TO SUBPART IIII OF PART 63
TABLE 3 TO SUBPART IIII OF PART 63—DEFAULT ORGANIC HAP MASS FRACTION FOR SOLVENTS AND SOLVENT BLENDS
TABLE 4 TO SUBPART IIII OF PART 63—DEFAULT ORGANIC HAP MASS FRACTION FOR PETROLEUM SOLVENT GROUPS
TABLE 5 TO SUBPART IIII OF PART 63—LIST OF HAP THAT MUST BE COUNTED TOWARD TOTAL ORGANIC HAP CONTENT IF PRESENT AT 0.1 PERCENT OR MORE BY MASS
APPENDIX A TO SUBPART IIII OF PART 63—DETERMINATION OF CAPTURE EFFICIENCY OF AUTOMOBILE AND LIGHT-DUTY TRUCK SPRAY BOOTH EMISSIONS FROM SOLVENT-BORNE COATINGS USING PANEL TESTING

Subpart JJJJ—National Emission Standards for Hazardous Air Pollutants: Paper and Other Web Coating

WHAT THIS SUBPART COVERS

63.3280 What is in this subpart?
63.3290 Does this subpart apply to me?
63.3300 Which of my emission sources are affected by this subpart?
63.3310 What definitions are used in this subpart?

EMISSION STANDARDS AND COMPLIANCE DATES

63.3320 What emission standards must I meet?
63.3321 What operating limits must I meet?
63.3330 When must I comply?

GENERAL REQUIREMENTS FOR COMPLIANCE WITH THE EMISSION STANDARDS AND FOR MONITORING AND PERFORMANCE TESTS

63.3340 What general requirements must I meet to comply with the standards?
63.3350 If I use a control device to comply with the emission standards what monitoring must I do?
63.3360 What performance tests must I conduct?

REQUIREMENTS FOR SHOWING COMPLIANCE

63.3370 How do I demonstrate compliance with the emission standards?

NOTIFICATIONS, REPORTS, AND RECORDS

63.3400 What notifications and reports must I submit?
63.3410 What records must I keep?

DELEGATION OF AUTHORITY

63.3420 What authorities may be delegated to the States?

TABLE 1 TO SUBPART JJJJ OF PART 63—OPERATING LIMITS IF USING ADD-ON CONTROL DEVICES AND CAPTURE SYSTEM
TABLE 2 TO SUBPART JJJJ OF PART 63—APPLICABILITY OF 40 CFR PART 63 GENERAL PROVISIONS TO SUBPART JJJJ

Subpart KKKK—National Emission Standards for Hazardous Air Pollutants: Surface Coating of Metal Cans

WHAT THIS SUBPART COVERS

63.3480 What is the purpose of this subpart?
63.3481 Am I subject to this subpart?
63.3482 What parts of my plant does this subpart cover?
63.3483 When do I have to comply with this subpart?

EMISSION LIMITATIONS

63.3490 What emission limits must I meet?
63.3491 What are my options for meeting the emission limits?
63.3492 What operating limits must I meet?
63.3493 What work practice standards must I meet?

sfrattini on LAPJZKW1R2 with $$_JOB
VerDate Sep<11>2014 09:16 Apr 04, 2023 Jkt 256165 PO 00000 Frm 00024 Fmt 8010 Sfmt 8010 Q:\40\256165.XXX PC31

GENERAL COMPLIANCE REQUIREMENTS

63.3500 What are my general requirements for complying with this subpart?
63.3501 What parts of the General Provisions apply to me?

NOTIFICATIONS, REPORTS, AND RECORDS

63.3510 What notifications must I submit?
63.3511 What reports must I submit?
63.3512 What records must I keep?
63.3513 In what form and for how long must I keep my records?

COMPLIANCE REQUIREMENTS FOR THE COMPLIANT MATERIAL OPTION

63.3520 By what date must I conduct the initial compliance demonstration?
63.3521 How do I demonstrate initial compliance with the emission limitations?
63.3522 How do I demonstrate continuous compliance with the emission limitations?

COMPLIANCE REQUIREMENTS FOR THE EMISSION RATE WITHOUT ADD-ON CONTROLS OPTION

63.3530 By what date must I conduct the initial compliance demonstration?
63.3531 How do I demonstrate initial compliance with the emission limitations?
63.3532 How do I demonstrate continuous compliance with the emission limitations?

COMPLIANCE REQUIREMENTS FOR THE EMISSION RATE WITH ADD-ON CONTROLS OPTION

63.3540 By what date must I conduct performance tests and initial compliance demonstrations?
63.3541 How do I demonstrate initial compliance?
63.3542 How do I demonstrate continuous compliance with the emission limitations?
63.3543 What are the general requirements for performance tests?
63.3544 How do I determine the emission capture system efficiency?
63.3545 How do I determine the add-on control device emission destruction or removal efficiency?
63.3546 How do I establish the emission capture system and add-on control device operating limits during the performance test?
63.3547 What are the requirements for continuous parameter monitoring system installation, operation, and maintenance?

COMPLIANCE REQUIREMENTS FOR THE CONTROL EFFICIENCY/OUTLET CONCENTRATION OPTION

63.3550 By what date must I conduct performance tests and initial compliance demonstrations?
63.3551 How do I demonstrate initial compliance?
63.3552 How do I demonstrate continuous compliance with the emission limitations?
63.3553 What are the general requirements for performance tests?
63.3554 How do I determine the emission capture system efficiency?
63.3555 How do I determine the outlet THC emissions and add-on control device emission destruction or removal efficiency?
63.3556 How do I establish the emission capture system and add-on control device operating limits during the performance test?
63.3557 What are the requirements for continuous parameter monitoring system installation, operation, and maintenance?

OTHER REQUIREMENTS AND INFORMATION

63.3560 Who implements and enforces this subpart?
63.3561 What definitions apply to this subpart?

TABLE 1 TO SUBPART KKKK OF PART 63—EMISSION LIMITS FOR NEW OR RECONSTRUCTED AFFECTED SOURCES
TABLE 2 TO SUBPART KKKK OF PART 63—EMISSION LIMITS FOR EXISTING AFFECTED SOURCES
TABLE 3 TO SUBPART KKKK OF PART 63—EMISSION LIMITS FOR AFFECTED SOURCES USING THE CONTROL EFFICIENCY/OUTLET CONCENTRATION COMPLIANCE OPTION
TABLE 4 TO SUBPART KKKK OF PART 63—OPERATING LIMITS IF USING THE EMISSION RATE WITH ADD-ON CONTROLS OPTION OR THE CONTROL EFFICIENCY/OUTLET CONCENTRATION COMPLIANCE OPTION
TABLE 5 TO SUBPART KKKK OF PART 63—APPLICABILITY OF GENERAL PROVISIONS TO SUBPART KKKK
TABLE 6 TO SUBPART KKKK OF PART 63—DEFAULT ORGANIC HAP MASS FRACTION FOR SOLVENTS AND SOLVENT BLENDS
TABLE 7 TO SUBPART KKKK OF PART 63—DEFAULT ORGANIC HAP MASS FRACTION FOR PETROLEUM SOLVENT GROUPS
TABLE 8 TO SUBPART KKKK OF PART 63—LIST OF HAZARDOUS AIR POLLUTANTS THAT MUST BE COUNTED TOWARD TOTAL ORGANIC HAP CONTENT IF PRESENT AT 0.1 PERCENT OR MORE BY MASS

Subpart MMMM—National Emission Standards for Hazardous Air Pollutants for Surface Coating of Miscellaneous Metal Parts and Products

WHAT THIS SUBPART COVERS

63.3880 What is the purpose of this subpart?
63.3881 Am I subject to this subpart?
63.3882 What parts of my plant does this subpart cover?
63.3883 When do I have to comply with this subpart?

sfrattini on LAPJZKW1R2 with $$_JOB
VerDate Sep<11>2014 09:16 Apr 04, 2023 Jkt 256165 PO 00000 Frm 00025 Fmt 8010 Sfmt 8010 Q:\40\256165.XXX PC31

EMISSION LIMITATIONS

63.3890 What emission limits must I meet?
63.3891 What are my options for meeting the emission limits?
63.3892 What operating limits must I meet?
63.3893 What work practice standards must I meet?

GENERAL COMPLIANCE REQUIREMENTS

63.3900 What are my general requirements for complying with this subpart?
63.3901 What parts of the General Provisions apply to me?

NOTIFICATIONS, REPORTS, AND RECORDS

63.3910 What notifications must I submit?
63.3920 What reports must I submit?
63.3930 What records must I keep?
63.3931 In what form and for how long must I keep my records?

COMPLIANCE REQUIREMENTS FOR THE COMPLIANT MATERIAL OPTION

63.3940 By what date must I conduct the initial compliance demonstration?
63.3941 How do I demonstrate initial compliance with the emission limitations?
63.3942 How do I demonstrate continuous compliance with the emission limitations?

COMPLIANCE REQUIREMENTS FOR THE EMISSION RATE WITHOUT ADD-ON CONTROLS OPTION

63.3950 By what date must I conduct the initial compliance demonstration?
63.3951 How do I demonstrate initial compliance with the emission limitations?
63.3952 How do I demonstrate continuous compliance with the emission limitations?

COMPLIANCE REQUIREMENTS FOR THE EMISSION RATE WITH ADD-ON CONTROLS OPTION

63.3960 By what date must I conduct performance tests and other initial compliance demonstrations?
63.3961 How do I demonstrate initial compliance?
63.3962 [Reserved]
63.3963 How do I demonstrate continuous compliance with the emission limitations?
63.3964 What are the general requirements for performance tests?
63.3965 How do I determine the emission capture system efficiency?
63.3966 How do I determine the add-on control device emission destruction or removal efficiency?
63.3967 How do I establish the emission capture system and add-on control device operating limits during the performance test?
63.3968 What are the requirements for continuous parameter monitoring system installation, operation, and maintenance?

OTHER REQUIREMENTS AND INFORMATION

63.3980 Who implements and enforces this subpart?
63.3981 What definitions apply to this subpart?

TABLE 1 TO SUBPART MMMM OF PART 63—OPERATING LIMITS IF USING THE EMISSION RATE WITH ADD-ON CONTROLS OPTION
TABLE 2 TO SUBPART MMMM OF PART 63—APPLICABILITY OF GENERAL PROVISIONS TO SUBPART MMMM OF PART 63
TABLE 3 TO SUBPART MMMM OF PART 63—DEFAULT ORGANIC HAP MASS FRACTION FOR SOLVENTS AND SOLVENT BLENDS
TABLE 4 TO SUBPART MMMM OF PART 63—DEFAULT ORGANIC HAP MASS FRACTION FOR PETROLEUM SOLVENT GROUPS
TABLE 5 TO SUBPART MMMM OF PART 63—LIST OF HAP THAT MUST BE COUNTED TOWARD TOTAL ORGANIC HAP CONTENT IF PRESENT AT 0.1 PERCENT OR MORE BY MASS
APPENDIX A TO SUBPART MMMM OF PART 63—ALTERNATIVE CAPTURE EFFICIENCY AND DESTRUCTION EFFICIENCY MEASUREMENT AND CAPTURE EFFICIENCY MONITORING PROCEDURES FOR MAGNET WIRE COATING OPERATIONS

Subpart NNNN—National Emission Standards for Hazardous Air Pollutants: Surface Coating of Large Appliances

WHAT THIS SUBPART COVERS

63.4080 What is the purpose of this subpart?
63.4081 Am I subject to this subpart?
63.4082 What parts of my plant does this subpart cover?
63.4083 When do I have to comply with this subpart?

EMISSION LIMITATIONS

63.4090 What emission limits must I meet?
63.4091 What are my options for meeting the emission limits?
63.4092 What operating limits must I meet?
63.4093 What work practice standards must I meet?

GENERAL COMPLIANCE REQUIREMENTS

63.4100 What are my general requirements for complying with this subpart?
63.4101 What parts of the General Provisions apply to me?

NOTIFICATIONS, REPORTS, AND RECORDS

63.4110 What notifications must I submit?
63.4120 What reports must I submit?
63.4121 What are my electronic reporting requirements?
63.4130 What records must I keep?

sfrattini on LAPJZKW1R2 with $$_JOB
VerDate Sep<11>2014 09:16 Apr 04, 2023 Jkt 256165 PO 00000 Frm 00026 Fmt 8010 Sfmt 8010 Q:\40\256165.XXX PC31

63.4131 In what form and for how long must I keep my records?

COMPLIANCE REQUIREMENTS FOR THE COMPLIANT MATERIAL OPTION

63.4140 By what date must I conduct the initial compliance demonstration?
63.4141 How do I demonstrate initial compliance with the emission limitations?
63.4142 How do I demonstrate continuous compliance with the emission limitations?

COMPLIANCE REQUIREMENTS FOR THE EMISSION RATE WITHOUT ADD-ON CONTROLS OPTION

63.4150 By what date must I conduct the initial compliance demonstration?
63.4151 How do I demonstrate initial compliance with the emission limitations?
63.4152 How do I demonstrate continuous compliance with the emission limitations?

COMPLIANCE REQUIREMENTS FOR THE EMISSION RATE WITH ADD-ON CONTROLS OPTION

63.4160 By what date must I conduct initial performance tests and other initial compliance demonstrations?
63.4161 How do I demonstrate initial compliance?
63.4162 [Reserved]
63.4163 How do I conduct periodic performance tests and demonstrate continuous compliance with the emission limitations?
63.4164 What are the general requirements for performance tests?
63.4165 How do I determine the emission capture system efficiency?
63.4166 How do I determine the add-on control device emission destruction or removal efficiency?
63.4167 How do I establish the emission capture system and add-on control device operating limits during performance tests?
63.4168 What are the requirements for continuous parameter monitoring system installation, operation, and maintenance?

OTHER REQUIREMENTS AND INFORMATION

63.4180 Who implements and enforces this subpart?
63.4181 What definitions apply to this subpart?
TABLE 1 TO SUBPART NNNN OF PART 63—OPERATING LIMITS IF USING THE EMISSION RATE WITH ADD-ON CONTROLS OPTION
TABLE 2 TO SUBPART NNNN OF PART 63—APPLICABILITY OF GENERAL PROVISIONS TO SUBPART NNNN
TABLE 3 TO SUBPART NNNN OF PART 63—DEFAULT ORGANIC HAP MASS FRACTION FOR SOLVENTS AND SOLVENT BLENDS
TABLE 4 TO SUBPART NNNN OF PART 63—DEFAULT ORGANIC MASS FRACTION FOR PETROLEUM SOLVENT GROUPS
TABLE 5 TO SUBPART NNNN OF PART 63—LIST OF HAZARDOUS AIR POLLUTANTS THAT MUST BE COUNTED TOWARD TOTAL ORGANIC HAP CONTENT IF PRESENT AT 0.1 PERCENT OR MORE BY MASS

Subpart OOOO—National Emission Standards for Hazardous Air Pollutants: Printing, Coating, and Dyeing of Fabrics and Other Textiles

WHAT THIS SUBPART COVERS

63.4280 What is the purpose of this subpart?
63.4281 Am I subject to this subpart?
63.4282 What parts of my plant does this subpart cover?
63.4283 When do I have to comply with this subpart?

EMISSION LIMITATIONS

63.4290 What emission limits must I meet?
63.4291 What are my options for meeting the emission limits?
63.4292 What operating limits must I meet?
63.4293 What work practice standards must I meet?

GENERAL COMPLIANCE REQUIREMENTS

63.4300 What are my general requirements for complying with this subpart?
63.4301 What parts of the General Provisions apply to me?

NOTIFICATIONS, REPORTS, AND RECORDS

63.4310 What notifications must I submit?
63.4311 What reports must I submit?
63.4312 What records must I keep?
63.4313 In what form and for how long must I keep my records?

COMPLIANCE REQUIREMENTS FOR THE COMPLIANT MATERIAL OPTION

63.4320 By what date must I conduct the initial compliance demonstration?
63.4321 How do I demonstrate initial compliance with the emission limitations?
63.4322 How do I demonstrate continuous compliance with the emission limitations?

COMPLIANCE REQUIREMENTS FOR THE EMISSION RATE WITHOUT ADD-ON CONTROLS OPTION

63.4330 By what date must I conduct the initial compliance demonstration?
63.4331 How do I demonstrate initial compliance with the emission limitations?
63.4332 How do I demonstrate continuous compliance with the emission limitations?

sfrattini on LAPJZKW1R2 with $$_JOB
VerDate Sep<11>2014 09:16 Apr 04, 2023 Jkt 256165 PO 00000 Frm 00027 Fmt 8010 Sfmt 8010 Q:\40\256165.XXX PC31

COMPLIANCE REQUIREMENTS FOR THE EMISSION RATE WITH ADD-ON CONTROLS OPTION

63.4340 By what date must I conduct initial performance tests and other initial compliance demonstrations?
63.4341 How do I demonstrate initial compliance?
63.4342 How do I conduct periodic performance tests and demonstrate continuous compliance with the emission limitations?

COMPLIANCE REQUIREMENTS FOR THE ORGANIC HAP OVERALL CONTROL EFFICIENCY AND OXIDIZER OUTLET ORGANIC HAP CONCENTRATION OPTIONS

63.4350 By what date must I conduct performance tests and other initial compliance demonstrations?
63.4351 How do I demonstrate initial compliance?
63.4352 How do I demonstrate continuous compliance with the emission limitations?

PERFORMANCE TESTING AND MONITORING REQUIREMENTS

63.4360 What are the general requirements for performance tests?
63.4361 How do I determine the emission capture system efficiency?
63.4362 How do I determine the add-on control device emission destruction or removal efficiency?
63.4363 How do I establish the add-on control device operating limits during the performance test?
63.4364 What are the requirements for CPMS installation, operation, and maintenance?

OTHER REQUIREMENTS AND INFORMATION

63.4370 Who implements and enforces this subpart?
63.4371 What definitions apply to this subpart?

TABLE 1 TO SUBPART OOOO OF PART 63—EMISSION LIMITS FOR NEW OR RECONSTRUCTED AND EXISTING AFFECTED SOURCES IN THE PRINTING, COATING, AND DYEING OF FABRICS AND OTHER TEXTILES SOURCE CATEGORY
TABLE 2 TO SUBPART OOOO OF PART 63—OPERATING LIMITS IF USING ADD-ON CONTROL DEVICES AND CAPTURE SYSTEM
TABLE 3 TO SUBPART OOOO OF PART 63—APPLICABILITY OF GENERAL PROVISIONS TO SUBPART OOOO
TABLE 4 TO SUBPART OOOO OF PART 63—DEFAULT ORGANIC HAP MASS FRACTION FOR SOLVENTS AND SOLVENT BLENDS
TABLE 5 TO SUBPART OOOO OF PART 63—DEFAULT ORGANIC HAP MASS FRACTION FOR PETROLEUM SOLVENT GROUPS
TABLE 6 TO SUBPART OOOO OF PART 63—LIST OF HAZARDOUS AIR POLLUTANTS THAT MUST BE COUNTED TOWARD TOTAL ORGANIC HAP CONTENT IF PRESENT AT 0.1 PERCENT OR MORE BY MASS

Subpart PPPP—National Emission Standards for Hazardous Air Pollutants for Surface Coating of Plastic Parts and Products

WHAT THIS SUBPART COVERS

63.4480 What is the purpose of this subpart?
63.4481 Am I subject to this subpart?
63.4482 What parts of my plant does this subpart cover?
63.4483 When do I have to comply with this subpart?

EMISSION LIMITATIONS

63.4490 What emission limits must I meet?
63.4491 What are my options for meeting the emission limits?
63.4492 What operating limits must I meet?
63.4493 What work practice standards must I meet?

GENERAL COMPLIANCE REQUIREMENTS

63.4500 What are my general requirements for complying with this subpart?
63.4501 What parts of the General Provisions apply to me?

NOTIFICATIONS, REPORTS, AND RECORDS

63.4510 What notifications must I submit?
63.4520 What reports must I submit?
63.4530 What records must I keep?
63.4531 In what form and for how long must I keep my records?

COMPLIANCE REQUIREMENTS FOR THE COMPLIANT MATERIAL OPTION

63.4540 By what date must I conduct the initial compliance demonstration?
63.4541 How do I demonstrate initial compliance with the emission limitations?
63.4542 How do I demonstrate continuous compliance with the emission limitations?

COMPLIANCE REQUIREMENTS FOR THE EMISSION RATE WITHOUT ADD-ON CONTROLS OPTION

63.4550 By what date must I conduct the initial compliance demonstration?
63.4551 How do I demonstrate initial compliance with the emission limitations?
63.4552 How do I demonstrate continuous compliance with the emission limitations?

COMPLIANCE REQUIREMENTS FOR THE EMISSION RATE WITH ADD-ON CONTROLS OPTION

63.4560 By what date must I conduct performance tests and initial compliance demonstrations?

sfrattini on LAPJZKW1R2 with $$_JOB
VerDate Sep<11>2014 09:16 Apr 04, 2023 Jkt 256165 PO 00000 Frm 00028 Fmt 8010 Sfmt 8010 Q:\40\256165.XXX PC31

63.4561 How do I demonstrate initial compliance?
63.4562 [Reserved]
63.4563 How do I demonstrate continuous compliance with the emission limitations?
63.4564 What are the general requirements for performance tests?
63.4565 How do I determine the emission capture system efficiency?
63.4566 How do I determine the add-on control device emission destruction or removal efficiency?
63.4567 How do I establish the emission capture system and add-on control device operating limits during the performance test?
63.4568 What are the requirements for continuous parameter monitoring system installation, operation, and maintenance?

OTHER REQUIREMENTS AND INFORMATION

63.4580 Who implements and enforces this subpart?
63.4581 What definitions apply to this subpart?

TABLE 1 TO SUBPART PPPP OF PART 63—OPERATING LIMITS IF USING THE EMISSION RATE WITH ADD-ON CONTROLS OPTION
TABLE 2 TO SUBPART PPPP OF PART 63—APPLICABILITY OF GENERAL PROVISIONS TO SUBPART PPPP OF PART 63
TABLE 3 TO SUBPART PPPP OF PART 63—DEFAULT ORGANIC HAP MASS FRACTION FOR SOLVENTS AND SOLVENT BLENDS
TABLE 4 TO SUBPART PPPP OF PART 63—DEFAULT ORGANIC HAP MASS FRACTION FOR PETROLEUM SOLVENT GROUPS
TABLE 5 TO SUBPART PPPP OF PART 63—LIST OF HAP THAT MUST BE COUNTED TOWARD TOTAL ORGANIC HAP CONTENT IF PRESENT AT 0.1 PERCENT OR MORE BY MASS
APPENDIX A TO SUBPART PPPP OF PART 63—DETERMINATION OF WEIGHT VOLATILE MATTER CONTENT AND WEIGHT SOLIDS CONTENT OF REACTIVE ADHESIVES

Subpart QQQQ—National Emission Standards for Hazardous Air Pollutants: Surface Coating of Wood Building Products

WHAT THIS SUBPART COVERS

63.4680 What is the purpose of this subpart?
63.4681 Am I subject to this subpart?
63.4682 What parts of my plant does this subpart cover?
63.4683 When do I have to comply with this subpart?

EMISSION LIMITATIONS

63.4690 What emission limits must I meet?
63.4691 What are my options for meeting the emission limits?
63.4692 What operating limits must I meet?
63.4693 What work practice standards must I meet?

GENERAL COMPLIANCE REQUIREMENTS

63.4700 What are my general requirements for complying with this subpart?
63.4701 What parts of the General Provisions apply to me?

NOTIFICATIONS, REPORTS, AND RECORDS

63.4710 What notifications must I submit?
63.4720 What reports must I submit?
63.4730 What records must I keep?
63.4731 In what form and for how long must I keep my records?

COMPLIANCE REQUIREMENTS FOR THE COMPLIANT MATERIAL OPTION

63.4740 By what date must I conduct the initial compliance demonstration?
63.4741 How do I demonstrate initial compliance with the emission limitations?
63.4742 How do I demonstrate continuous compliance with the emission limitations?

COMPLIANCE REQUIREMENTS FOR THE EMISSION RATE WITHOUT ADD-ON CONTROLS OPTION

63.4750 By what date must I conduct the initial compliance demonstration?
63.4751 How do I demonstrate initial compliance with the emission limitations?
63.4752 How do I demonstrate continuous compliance with the emission limitations?

COMPLIANCE REQUIREMENTS FOR THE EMISSION RATE WITH ADD-ON CONTROLS OPTION

63.4760 By what date must I conduct performance tests and other initial compliance demonstrations?
63.4761 How do I demonstrate initial compliance?
63.4762 [Reserved]
63.4763 How do I demonstrate continuous compliance with the emission limitations?
63.4764 What are the general requirements for performance tests?
63.4765 How do I determine the emission capture system efficiency?
63.4766 How do I determine the add-on control device emission destruction or removal efficiency?
63.4767 How do I establish the emission capture system and add-on control device operating limits during the performance test?
63.4768 What are the requirements for continuous parameter monitoring system installation, operation, and maintenance?

OTHER REQUIREMENTS AND INFORMATION

63.4780 Who implements and enforces this subpart?
63.4781 What definitions apply to this subpart?

sfrattini on LAPJZKW1R2 with $$_JOB
VerDate Sep<11>2014 09:16 Apr 04, 2023 Jkt 256165 PO 00000 Frm 00029 Fmt 8010 Sfmt 8010 Q:\40\256165.XXX PC31

TABLE 1 TO SUBPART QQQQ OF PART 63—EMISSION LIMITS FOR NEW OR RECONSTRUCTED AFFECTED SOURCES
TABLE 2 TO SUBPART QQQQ OF PART 63—EMISSION LIMITS FOR EXISTING AFFECTED SOURCES
TABLE 3 TO SUBPART QQQQ OF PART 63—OPERATING LIMITS IF USING THE EMISSION RATE WITH ADD-ON CONTROLS OPTION
TABLE 4 TO SUBPART QQQQ OF PART 63—APPLICABILITY OF GENERAL PROVISIONS TO SUBPART QQQQ OF PART 63
TABLE 5 TO SUBPART QQQQ OF PART 63—DEFAULT ORGANIC HAP MASS FRACTION FOR SOLVENTS AND SOLVENT BLENDS
TABLE 6 TO SUBPART QQQQ OF PART 63—DEFAULT ORGANIC HAP MASS FRACTION FOR PETROLEUM SOLVENT GROUPS

Subpart RRRR—National Emission Standards for Hazardous Air Pollutants: Surface Coating of Metal Furniture

WHAT THIS SUBPART COVERS

63.4880 What is the purpose of this subpart?
63.4881 Am I subject to this subpart?
63.4882 What parts of my plant does this subpart cover?
63.4883 When do I have to comply with this subpart?

EMISSION LIMITATIONS

63.4890 What Emission Limits Must I Meet?
63.4891 What are my options for demonstrating compliance with the emission limits?
63.4892 What operating limits must I meet?
63.4893 What work practice standards must I meet?

GENERAL COMPLIANCE REQUIREMENTS

63.4900 What are my general requirements for complying with this subpart?
63.4901 What parts of the General Provisions apply to me?

NOTIFICATIONS, REPORTS, AND RECORDS

63.4910 What notifications must I submit?
63.4920 What reports must I submit?
63.4921 What are my electronic reporting requirements?
63.4930 What records must I keep?
63.4931 In what form and for how long must I keep my records?

COMPLIANCE REQUIREMENTS FOR THE COMPLIANT MATERIAL OPTION

63.4940 By what date must I conduct the initial compliance demonstration?
63.4941 How do I demonstrate initial compliance with the emission limitations?
63.4942 How do I demonstrate continuous compliance with the emission limitations?

COMPLIANCE REQUIREMENTS FOR THE EMISSION RATE WITHOUT ADD-ON CONTROLS OPTION

63.4950 By what date must I conduct the initial compliance demonstration?
63.4951 How do I demonstrate initial compliance with the emission limitations?
63.4952 How do I demonstrate continuous compliance with the emission limitations?

COMPLIANCE REQUIREMENTS FOR THE EMISSION RATE WITH ADD-ON CONTROLS OPTION

63.4960 By what date must I conduct initial performance tests and other initial compliance demonstrations?
63.4961 How do I demonstrate initial compliance?
63.4962 How do I conduct periodic performance tests and demonstrate continuous compliance with the emission limitations?
63.4963 What are the general requirements for performance tests?
63.4964 How do I determine the emission capture system efficiency?
63.4965 How do I determine the add-on control device emission destruction or removal efficiency?
63.4966 How do I establish the emission capture system and add-on control device operating limits during performance tests?
63.4967 What are the requirements for continuous parameter monitoring system installation, operation, and maintenance?

OTHER REQUIREMENTS AND INFORMATION

63.4980 Who implements and enforces this subpart?
63.4981 What definitions apply to this subpart?
TABLE 1 TO SUBPART RRRR OF PART 63—OPERATING LIMITS IF USING THE EMISSION RATE WITH ADD-ON CONTROLS OPTION
TABLE 2 TO SUBPART RRRR OF PART 63—APPLICABILITY OF GENERAL PROVISIONS TO SUBPART RRRR
TABLE 3 TO SUBPART RRRR OF PART 63—DEFAULT ORGANIC HAP MASS FRACTION FOR SOLVENTS AND SOLVENT BLENDS
TABLE 4 TO SUBPART RRRR OF PART 63—DEFAULT ORGANIC HAP MASS FRACTION FOR PETROLEUM SOLVENT GROUPS
TABLE 5 TO SUBPART RRRR OF PART 63—LIST OF HAZARDOUS AIR POLLUTANTS THAT MUST BE COUNTED TOWARD TOTAL ORGANIC HAP CONTENT IF PRESENT AT 0.1 PERCENT OR MORE BY MASS

Subpart SSSS—National Emission Standards for Hazardous Air Pollutants: Surface Coating of Metal Coil

WHAT THIS SUBPART COVERS

63.5080 What is in this subpart?

sfrattini on LAPJZKW1R2 with $$_JOB
VerDate Sep<11>2014 09:16 Apr 04, 2023 Jkt 256165 PO 00000 Frm 00030 Fmt 8010 Sfmt 8010 Q:\40\256165.XXX PC31

63.5090 Does this subpart apply to me?
63.5100 Which of my emissions sources are affected by this subpart?
63.5110 What special definitions are used in this subpart?

EMISSION STANDARDS AND COMPLIANCE DATES

63.5120 What emission standards must I meet?
63.5121 What operating limits must I meet?
63.5130 When must I comply?

GENERAL REQUIREMENTS FOR COMPLIANCE WITH THE EMISSION STANDARDS AND FOR MONITORING AND PERFORMANCE TESTS

63.5140 What general requirements must I meet to comply with the standards?
63.5150 If I use a control device to comply with the emission standards, what monitoring must I do?
63.5160 What performance tests must I complete?

REQUIREMENTS FOR SHOWING COMPLIANCE

63.5170 How do I demonstrate compliance with the standards?

REPORTING AND RECORDKEEPING

63.5180 What reports must I submit?
63.5181 What are my electronic reporting requirements?
63.5190 What records must I maintain?

DELEGATION OF AUTHORITY

63.5200 What authorities may be delegated to the States?
63.5201–63.5209 [Reserved]

TABLE 1 TO SUBPART SSSS OF PART 63—OPERATING LIMITS IF USING ADD-ON CONTROL DEVICES AND CAPTURE SYSTEM
TABLE 2 TO SUBPART SSSS OF PART 63—APPLICABILITY OF GENERAL PROVISIONS TO SUBPART SSSS
TABLE 3 TO SUBPART SSSS OF PART 63—LIST OF HAZARDOUS AIR POLLUTANTS THAT MUST BE COUNTED TOWARD TOTAL ORGANIC HAP CONTENT IF PRESENT AT 0.1 PERCENT OR MORE BY MASS

Subpart TTTT—National Emission Standards for Hazardous Air Pollutants for Leather Finishing Operations

WHAT THIS SUBPART COVERS

63.5280 What is the purpose of this subpart?
63.5285 Am I subject to this subpart?
63.5290 What parts of my facility does this subpart cover?
63.5295 When do I have to comply with this subpart?

STANDARDS

63.5305 What emission standards must I meet?

COMPLIANCE REQUIREMENTS

63.5320 How does my affected major source comply with the HAP emission standards?
63.5325 What is a plan for demonstrating compliance and when must I have one in place?
63.5330 How do I determine the compliance ratio?
63.5335 How do I determine the actual HAP loss?
63.5340 How do I determine the allowable HAP loss?
63.5345 How do I distinguish between the two upholstery product process operations?
63.5350 How do I distinguish between the water-resistant/specialty and nonwater-resistant leather product process operations?
63.5355 How do I monitor and collect data to demonstrate continuous compliance?
63.5360 How do I demonstrate continuous compliance with the emission standards?

TESTING AND INITIAL COMPLIANCE REQUIREMENTS

63.5375 When must I conduct a performance test or initial compliance demonstration?
63.5380 How do I conduct performance tests?
63.5385 How do I measure the quantity of finish applied to the leather?
63.5390 How do I measure the HAP content of a finish?
63.5395 How do I measure the density of a finish?
63.5400 How do I measure the quantity of leather processed?

NOTIFICATIONS, REPORTS, AND RECORDS

63.5415 What notifications must I submit and when?
63.5420 What reports must I submit and when?
63.5425 When must I start recordkeeping to determine my compliance ratio?
63.5430 What records must I keep?
63.5435 In what form and how long must I keep my records?

OTHER REQUIREMENTS AND INFORMATION

63.5450 What parts of the General Provisions apply to me?
63.5455 Who administers this subpart?
63.5460 What definitions apply to this subpart?

FIGURE 1 TO SUBPART TTTT OF PART 63—EXAMPLE LOGS FOR RECORDING LEATHER FINISH USE AND HAP CONTENT
TABLE 1 TO SUBPART TTTT OF PART 63—LEATHER FINISHING HAP EMISSION LIMITS FOR DETERMINING THE ALLOWABLE HAP LOSS

sfrattini on LAPJZKW1R2 with $$_JOB
VerDate Sep<11>2014 09:16 Apr 04, 2023 Jkt 256165 PO 00000 Frm 00031 Fmt 8010 Sfmt 8010 Q:\40\256165.XXX PC31

TABLE 2 TO SUBPART TTTT OF PART 63—APPLICABILITY OF GENERAL PROVISIONS TO SUBPART TTTT

Subpart UUUU—National Emission Standards for Hazardous Air Pollutants for Cellulose Products Manufacturing

WHAT THIS SUBPART COVERS

63.5480 What is the purpose of this subpart?
63.5485 Am I subject to this subpart?
63.5490 What parts of my plant does this subpart cover?
63.5495 When do I have to comply with this subpart?

EMISSION LIMITS, OPERATING LIMITS, AND WORK PRACTICE STANDARDS

63.5505 What emission limits, operating limits, and work practice standards must I meet?

GENERAL COMPLIANCE REQUIREMENTS

63.5515 What are my general requirements for complying with this subpart?

TESTING AND INITIAL COMPLIANCE REQUIREMENTS

63.5530 How do I demonstrate initial compliance with the emission limits and work practice standards?
63.5535 What performance tests and other procedures must I use?
63.5540 By what date must I conduct a performance test or other initial compliance demonstration?
63.5541 When must I conduct subsequent performance tests?
63.5545 What are my monitoring installation, operation, and maintenance requirements?

CONTINUOUS COMPLIANCE REQUIREMENTS

63.5555 How do I demonstrate continuous compliance with the emission limits, operating limits, and work practice standards?
63.5560 How do I monitor and collect data to demonstrate continuous compliance?

NOTIFICATIONS, REPORTS, AND RECORDS

63.5575 What notifications must I submit and when?
63.5580 What reports must I submit and when?
63.5585 What records must I keep?
63.5590 In what form and how long must I keep my records?

OTHER REQUIREMENTS AND INFORMATION

63.5595 What compliance options do I have if part of my affected source is subject to both this subpart and another subpart?
63.5600 What other requirements apply to me?
63.5605 Who implements and enforces this subpart?
63.5610 What definitions apply to this subpart?

TABLE 1 TO SUBPART UUUU OF PART 63—EMISSION LIMITS AND WORK PRACTICE STANDARDS
TABLE 2 TO SUBPART UUUU OF PART 63—OPERATING LIMITS
TABLE 3 TO SUBPART UUUU OF PART 63—INITIAL COMPLIANCE WITH EMISSION LIMITS AND WORK PRACTICE STANDARDS
TABLE 4 TO SUBPART UUUU OF PART 63—REQUIREMENTS FOR PERFORMANCE TESTS
TABLE 5 TO SUBPART UUUU OF PART 63—CONTINUOUS COMPLIANCE WITH EMISSION LIMITS AND WORK PRACTICE STANDARDS
TABLE 6 TO SUBPART UUUU OF PART 63—CONTINUOUS COMPLIANCE WITH OPERATING LIMITS
TABLE 7 TO SUBPART UUUU OF PART 63—NOTIFICATIONS
TABLE 8 TO SUBPART UUUU OF PART 63—REPORTING REQUIREMENTS
TABLE 9 TO SUBPART UUUU OF PART 63—RECORDKEEPING REQUIREMENTS
TABLE 10 TO SUBPART UUUU OF PART 63—APPLICABILITY OF GENERAL PROVISIONS TO SUBPART UUUU

Subpart VVVV—National Emission Standards for Hazardous Air Pollutants for Boat Manufacturing

WHAT THE SUBPART COVERS

63.5680 What is the purpose of this subpart?
63.5683 Does this subpart apply to me?
63.5686 How do I demonstrate that my facility is not a major source?
63.5689 What parts of my facility are covered by this subpart?
63.5692 How do I know if my boat manufacturing facility is a new source or an existing source?
63.5695 When must I comply with this subpart?

STANDARDS FOR OPEN MOLDING RESIN AND GEL COAT OPERATIONS

63.5698 What emission limit must I meet for open molding resin and gel coat operations?
63.5701 What are my options for complying with the open molding emission limit?
63.5704 What are the general requirements for complying with the open molding emission limit?
63.5707 What is an implementation plan for open molding operations and when do I need to prepare one?
63.5710 How do I demonstrate compliance using emissions averaging?
63.5713 How do I demonstrate compliance using compliant materials?
63.5714 How do I demonstrate compliance if I use filled resins?

sfrattini on LAPJZKW1R2 with $$_JOB
VerDate Sep<11>2014 09:16 Apr 04, 2023 Jkt 256165 PO 00000 Frm 00032 Fmt 8010 Sfmt 8010 Q:\40\256165.XXX PC31

DEMONSTRATING COMPLIANCE FOR OPEN MOLDING OPERATIONS CONTROLLED BY ADD-ON CONTROL DEVICES

63.5715 What operating limits must I meet?
63.5716 When must I conduct a performance test?
63.5719 How do I conduct a performance test?
63.5722 How do I use the performance test data to demonstrate initial compliance?
63.5725 What are the requirements for monitoring and demonstrating continuous compliance?

STANDARDS FOR CLOSED MOLDING RESIN OPERATIONS

63.5728 What standards must I meet for closed molding resin operations?

STANDARDS FOR RESIN AND GEL COAT MIXING OPERATIONS

63.5731 What standards must I meet for resin and gel coat mixing operations?

STANDARDS FOR RESIN AND GEL COAT APPLICATION EQUIPMENT CLEANING OPERATIONS

63.5734 What standards must I meet for resin and gel coat application equipment cleaning operations?
63.5737 How do I demonstrate compliance with the resin and gel coat application equipment cleaning standards?

STANDARDS FOR CARPET AND FABRIC ADHESIVE OPERATIONS

63.5740 What emission limit must I meet for carpet and fabric adhesive operations?

STANDARDS FOR ALUMINUM RECREATIONAL BOAT SURFACE COATING OPERATIONS

63.5743 What standards must I meet for aluminum recreational boat surface coating operations?
63.5746 How do I demonstrate compliance with the emission limits for aluminum wipedown solvents and aluminum coatings?
63.5749 How do I calculate the organic HAP content of aluminum wipedown solvents?
63.5752 How do I calculate the organic HAP content of aluminum recreational boat surface coatings?
63.5753 How do I calculate the combined organic HAP content of aluminum wipedown solvents and aluminum recreational boat surface coatings?
63.5755 How do I demonstrate compliance with the aluminum recreational boat surface coating spray gun cleaning work practice standards?

METHODS FOR DETERMINING HAZARDOUS AIR POLLUTANT CONTENT

63.5758 How do I determine the organic HAP content of materials?

NOTIFICATIONS, REPORTS, AND RECORDS

63.5761 What notifications must I submit and when?
63.5764 What reports must I submit and when?
63.5765 How do I submit my reports?
63.5767 What records must I keep?
63.5770 In what form and for how long must I keep my records?

OTHER INFORMATION YOU NEED TO KNOW

63.5773 What parts of the General Provisions apply to me?
63.5776 Who implements and enforces this subpart?

DEFINITIONS

63.5779 What definitions apply to this subpart?

TABLE 1 TO SUBPART VVVV OF PART 63—COMPLIANCE DATES FOR NEW AND EXISTING BOAT MANUFACTURING FACILITIES
TABLE 2 TO SUBPART VVVV OF PART 63—ALTERNATIVE HAP CONTENT REQUIREMENTS FOR OPEN MOLDING RESIN AND GEL COAT OPERATIONS
TABLE 3 TO SUBPART VVVV OF PART 63—MACT MODEL POINT VALUE FORMULAS FOR OPEN MOLDING OPERATIONS
TABLE 4 TO SUBPART VVVV OF PART 63—OPERATING LIMITS IF USING AN ADD-ON CONTROL DEVICE FOR OPEN MOLDING OPERATIONS
TABLE 5 TO SUBPART VVVV OF PART 63—DEFAULT ORGANIC HAP CONTENTS OF SOLVENTS AND SOLVENT BLENDS
TABLE 6 TO SUBPART VVVV OF PART 63—DEFAULT ORGANIC HAP CONTENTS OF PETROLEUM SOLVENT GROUPS
TABLE 7 TO SUBPART VVVV OF PART 63—APPLICABILITY AND TIMING OF NOTIFICATIONS
TABLE 8 TO SUBPART VVVV OF PART 63—APPLICABILITY OF GENERAL PROVISIONS (40 CFR PART 63, SUBPART A) TO SUBPART VVVV

Subpart WWWW—National Emissions Standards for Hazardous Air Pollutants: Reinforced Plastic Composites Production

WHAT THIS SUBPART COVERS

63.5780 What is the purpose of this subpart?
63.5785 Am I subject to this subpart?
63.5787 What if I also manufacture fiberglass boats or boat parts?
63.5790 What parts of my plant does this subpart cover?
63.5795 How do I know if my reinforced plastic composites production facility is a new affected source or an existing affected source?

sfrattini on LAPJZKW1R2 with $$_JOB
VerDate Sep<11>2014 09:16 Apr 04, 2023 Jkt 256165 PO 00000 Frm 00033 Fmt 8010 Sfmt 8010 Q:\40\256165.XXX PC31

CALCULATING ORGANIC HAP EMISSIONS FACTORS FOR OPEN MOLDING AND CENTRIFUGAL CASTING

63.5796 What are the organic HAP emissions factor equations in Table 1 to this subpart and how are they used in this subpart?
63.5797 How do I determine the organic HAP content of my resins and gel coats?
63.5798 What if I want to use, or I manufacture, an application technology (new or existing) whose organic HAP emissions characteristics are not represented by the equations in Table 1 to this subpart?
63.5799 How do I calculate my facility's organic HAP emissions on a tpy basis for purposes of determining which paragraphs of § 63.5805 apply?

COMPLIANCE DATES AND STANDARDS

63.5800 When do I have to comply with this subpart?
63.5805 What standards must I meet to comply with this subpart?

OPTIONS FOR MEETING STANDARDS

63.5810 What are my options for meeting the standards for open molding and centrifugal casting operations at new and existing sources?
63.5820 What are my options for meeting the standards for continuous lamination/casting operations?
63.5830 What are my options for meeting the standards for pultrusion operations subject to the 60 weight percent organic HAP emissions reductions requirement?

GENERAL COMPLIANCE REQUIREMENTS

63.5835 What are my general requirements for complying with this subpart?

TESTING AND INITIAL COMPLIANCE REQUIREMENTS

63.5840 By what date must I conduct a performance test or other initial compliance demonstration?
63.5845 When must I conduct subsequent performance tests?
63.5850 How do I conduct performance tests, performance evaluations, and design evaluations?
63.5855 What are my monitor installation and operation requirements?
63.5860 How do I demonstrate initial compliance with the standards?

EMISSIONS FACTOR, PERCENT REDUCTION, AND CAPTURE EFFICIENCY CALCULATION PROCEDURES FOR CONTINUOUS LAMINATION/CASTING OPERATIONS

63.5865 What data must I generate to demonstrate compliance with the standards for continuous lamination/casting operations?
63.5870 How do I calculate annual uncontrolled and controlled organic HAP emissions from my wet-out area(s) and from my oven(s) for continuous lamination/casting operations?
63.5875 How do I determine the capture efficiency of the enclosure on my wet-out area and the capture efficiency of my oven(s) for continuous lamination/casting operations?
63.5880 How do I determine how much neat resin plus is applied to the line and how much neat gel coat plus is applied to the line for continuous lamination/casting operations?
63.5885 How do I calculate percent reduction to demonstrate compliance for continuous lamination/casting operations?
63.5890 How do I calculate an organic HAP emissions factor to demonstrate compliance for continuous lamination/casting operations?

CONTINUOUS COMPLIANCE REQUIREMENTS

63.5895 How do I monitor and collect data to demonstrate continuous compliance?
63.5900 How do I demonstrate continuous compliance with the standards?

NOTIFICATIONS, REPORTS, AND RECORDS

63.5905 What notifications must I submit and when?
63.5910 What reports must I submit and when?
63.5912 How do I submit my reports?
63.5915 What records must I keep?
63.5920 In what form and how long must I keep my records?

OTHER REQUIREMENTS AND INFORMATION

63.5925 What parts of the General Provisions apply to me?
63.5930 Who implements and enforces this subpart?
63.5935 What definitions apply to this subpart?

TABLE 1 TO SUBPART WWWW OF PART 63—EQUATIONS TO CALCULATE ORGANIC HAP EMISSIONS FACTORS FOR SPECIFIC OPEN MOLDING AND CENTRIFUGAL CASTING PROCESS STREAMS
TABLE 2 TO SUBPART WWWW OF PART 63—COMPLIANCE DATES FOR NEW AND EXISTING REINFORCED PLASTIC COMPOSITES FACILITIES
TABLE 3 TO SUBPART WWWW OF PART 63—ORGANIC HAP EMISSIONS LIMITS FOR EXISTING OPEN MOLDING SOURCES, NEW OPEN MOLDING SOURCES EMITTING LESS THAN 100 TPY OF HAP, AND NEW AND EXISTING CENTRIFUGAL CASTING AND CONTINUOUS LAMINATION/CASTING SOURCES THAT EMIT LESS THAN 100 TPY OF HAP
TABLE 4 TO SUBPART WWWW OF PART 63—WORK PRACTICE STANDARDS

sfrattini on LAPJZKW1R2 with $$_JOB
VerDate Sep<11>2014 09:16 Apr 04, 2023 Jkt 256165 PO 00000 Frm 00034 Fmt 8010 Sfmt 8010 Q:\40\256165.XXX PC31

TABLE 5 TO SUBPART WWWW OF PART 63—ALTERNATIVE ORGANIC HAP EMISSIONS LIMITS FOR OPEN MOLDING, CENTRIFUGAL CASTING, AND SMC MANUFACTURING OPERATIONS WHERE THE STANDARDS ARE BASED ON A 95 PERCENT REDUCTION REQUIREMENT
TABLE 6 TO SUBPART WWWW OF PART 63—BASIC REQUIREMENTS FOR PERFORMANCE TESTS, PERFORMANCE EVALUATIONS, AND DESIGN EVALUATIONS FOR NEW AND EXISTING SOURCES USING ADD-ON CONTROL DEVICES
TABLE 7 TO SUBPART WWWW OF PART 63—OPTIONS ALLOWING USE OF THE SAME RESIN ACROSS DIFFERENT OPERATIONS THAT USE THE SAME RESIN TYPE
TABLE 8 TO SUBPART WWWW OF PART 63—INITIAL COMPLIANCE WITH ORGANIC HAP EMISSIONS LIMITS
TABLE 9 TO SUBPART WWWW OF PART 63—INITIAL COMPLIANCE WITH WORK PRACTICE STANDARDS.
TABLE 10 TO SUBPART WWWW OF PART 63—DATA REQUIREMENTS FOR NEW AND EXISTING CONTINUOUS LAMINATION LINES AND CONTINUOUS CASTING LINES COMPLYING WITH A PERCENT REDUCTION LIMIT ON A PER LINE BASIS
TABLE 11 TO SUBPART WWWW OF PART 63—DATA REQUIREMENTS FOR NEW AND EXISTING CONTINUOUS LAMINATION AND CONTINUOUS CASTING LINES COMPLYING WITH A PERCENT REDUCTION LIMIT OR A LBS/TON LIMIT ON AN AVERAGING BASIS
TABLE 12 TO SUBPART WWWW OF PART 63—DATA REQUIREMENTS FOR NEW AND EXISTING CONTINUOUS LAMINATION LINES AND CONTINUOUS CASTING LINES COMPLYING WITH A LBS/TON ORGANIC HAP EMISSIONS LIMIT ON A PER LINE BASIS
TABLE 13 TO SUBPART WWWW OF PART 63—APPLICABILITY AND TIMING OF NOTIFICATIONS
TABLE 14 TO SUBPART WWWW OF PART 63—REQUIREMENTS FOR REPORTS
TABLE 15 TO SUBPART WWWW OF PART 63—APPLICABILITY OF GENERAL PROVISIONS (SUBPART A) TO SUBPART WWWW OF PART 63
APPENDIX A TO SUBPART WWWW OF PART 63—TEST METHOD FOR DETERMINING VAPOR SUPPRESSANT EFFECTIVENESS

Subpart XXXX—National Emission Standards for Hazardous Air Pollutants: Rubber Tire Manufacturing

WHAT THIS SUBPART COVERS

63.5980 What is the purpose of this subpart?
63.5981 Am I subject to this subpart?
63.5982 What parts of my facility does this subpart cover?
63.5983 When do I have to comply with this subpart?

EMISSION LIMITS FOR TIRE PRODUCTION AFFECTED SOURCES

63.5984 What emission limits must I meet for tire production affected sources?
63.5985 What are my alternatives for meeting the emission limits for tire production affected sources?

EMISSION LIMITS FOR TIRE CORD PRODUCTION AFFECTED SOURCES

63.5986 What emission limits must I meet for tire cord production affected sources?
63.5987 What are my alternatives for meeting the emission limits for tire cord production affected sources?

EMISSION LIMITATIONS FOR PUNCTURE SEALANT APPLICATION AFFECTED SOURCES

63.5988 What emission limitations must I meet for puncture sealant application affected sources?
63.5989 What are my alternatives for meeting the emission limitations for puncture sealant application affected sources?

GENERAL COMPLIANCE REQUIREMENTS

63.5990 What are my general requirements for complying with this subpart?

GENERAL TESTING AND INITIAL COMPLIANCE REQUIREMENTS

63.5991 By what date must I conduct an initial compliance demonstration or performance test?
63.5992 When must I conduct subsequent performance tests?
63.5993 What performance tests and other procedures must I use?

TESTING AND INITIAL COMPLIANCE REQUIREMENTS FOR TIRE PRODUCTION AFFECTED SOURCES

63.5994 How do I conduct tests and procedures for tire production affected sources?
63.5995 What are my monitoring installation, operation, and maintenance requirements?
63.5996 How do I demonstrate initial compliance with the emission limits for tire production affected sources?

TESTING AND INITIAL COMPLIANCE REQUIREMENTS FOR TIRE CORD PRODUCTION AFFECTED SOURCES

63.5997 How do I conduct tests and procedures for tire cord production affected sources?
63.5998 What are my monitoring installation, operation, and maintenance requirements?
63.5999 How do I demonstrate initial compliance with the emission limits for tire cord production affected sources?

sfrattini on LAPJZKW1R2 with $$_JOB
VerDate Sep<11>2014 09:16 Apr 04, 2023 Jkt 256165 PO 00000 Frm 00035 Fmt 8010 Sfmt 8010 Q:\40\256165.XXX PC31

TESTING AND INITIAL COMPLIANCE REQUIREMENTS FOR PUNCTURE SEALANT APPLICATION AFFECTED SOURCES

63.6000 How do I conduct tests and procedures for puncture sealant application affected sources?
63.6001 What are my monitoring installation, operation, and maintenance requirements?
63.6002 How do I demonstrate initial compliance with the emission limits for puncture sealant application affected sources?

CONTINUOUS COMPLIANCE REQUIREMENTS FOR TIRE PRODUCTION AFFECTED SOURCES

63.6003 How do I monitor and collect data to demonstrate continuous compliance with the emission limits for tire production affected sources?
63.6004 How do I demonstrate continuous compliance with the emission limits for tire production affected sources?

CONTINUOUS COMPLIANCE REQUIREMENTS FOR TIRE CORD PRODUCTION AFFECTED SOURCES

63.6005 How do I monitor and collect data to demonstrate continuous compliance with the emission limits for tire cord production affected sources?
63.6006 How do I demonstrate continuous compliance with the emission limits for tire cord production affected sources?

CONTINUOUS COMPLIANCE REQUIREMENTS FOR PUNCTURE SEALANT APPLICATION AFFECTED SOURCES

63.6007 How do I monitor and collect data to demonstrate continuous compliance with the emission limitations for puncture sealant application affected sources?
63.6008 How do I demonstrate continuous compliance with the emission limitations for puncture sealant application affected sources?

NOTIFICATIONS, REPORTS, AND RECORDS

63.6009 What notifications must I submit and when?
63.6010 What reports must I submit and when?
63.6011 What records must I keep?
63.6012 In what form and how long must I keep my records?

OTHER REQUIREMENTS AND INFORMATION

63.6013 What parts of the General Provisions apply to me?
63.6014 Who implements and enforces this subpart?
63.6015 What definitions apply to this subpart?

TABLE 1 TO SUBPART XXXX OF PART 63—EMISSION LIMITS FOR TIRE PRODUCTION AFFECTED SOURCES
TABLE 2 TO SUBPART XXXX OF PART 63—EMISSION LIMITS FOR TIRE CORD PRODUCTION AFFECTED SOURCES
TABLE 3 TO SUBPART XXXX OF PART 63—EMISSION LIMITS FOR PUNCTURE SEALANT APPLICATION AFFECTED SOURCES
TABLE 4 TO SUBPART XXXX OF PART 63—OPERATING LIMITS FOR PUNCTURE SEALANT APPLICATION CONTROL DEVICES
TABLE 5 TO SUBPART XXXX OF PART 63—REQUIREMENTS FOR PERFORMANCE TESTS
TABLE 6 TO SUBPART XXXX OF PART 63—INITIAL COMPLIANCE WITH THE EMISSION LIMITS FOR TIRE PRODUCTION AFFECTED SOURCES
TABLE 7 TO SUBPART XXXX OF PART 63—INITIAL COMPLIANCE WITH THE EMISSION LIMITS FOR TIRE CORD PRODUCTION AFFECTED SOURCES
TABLE 8 TO SUBPART XXXX OF PART 63—INITIAL COMPLIANCE WITH THE EMISSION LIMITS FOR PUNCTURE SEALANT APPLICATION AFFECTED SOURCES
TABLE 9 TO SUBPART XXXX OF PART 63—MINIMUM DATA FOR CONTINUOUS COMPLIANCE WITH THE EMISSION LIMITS FOR TIRE PRODUCTION AFFECTED SOURCES
TABLE 10 TO SUBPART XXXX OF PART 63—CONTINUOUS COMPLIANCE WITH THE EMISSION LIMITS FOR TIRE PRODUCTION AFFECTED SOURCES
TABLE 11 TO SUBPART XXXX OF PART 63—MINIMUM DATA FOR CONTINUOUS COMPLIANCE WITH THE EMISSION LIMITS FOR TIRE CORD PRODUCTION AFFECTED SOURCES
TABLE 12 TO SUBPART XXXX OF PART 63—CONTINUOUS COMPLIANCE WITH THE EMISSION LIMITS FOR TIRE CORD PRODUCTION AFFECTED SOURCES
TABLE 13 TO SUBPART XXXX OF PART 63—MINIMUM DATA FOR CONTINUOUS COMPLIANCE WITH THE EMISSION LIMITATIONS FOR PUNCTURE SEALANT APPLICATION AFFECTED SOURCES
TABLE 14 TO SUBPART XXXX OF PART 63—CONTINUOUS COMPLIANCE WITH THE EMISSION LIMITATIONS FOR PUNCTURE SEALANT APPLICATION AFFECTED SOURCES
TABLE 15 TO SUBPART XXXX OF PART 63—REQUIREMENTS FOR REPORTS
TABLE 16 TO SUBPART XXXX OF PART 63—SELECTED HAZARDOUS AIR POLLUTANTS
TABLE 17 TO SUBPART XXXX OF PART 63—APPLICABILITY OF GENERAL PROVISIONS TO THIS SUBPART XXXX

Subpart YYYY—National Emission Standards for Hazardous Air Pollutants for Stationary Combustion Turbines

WHAT THIS SUBPART COVERS

63.6080 What is the purpose of subpart YYYY?
63.6085 Am I subject to this subpart?
63.6090 What parts of my plant does this subpart cover?

sfrattini on LAPJZKW1R2 with $$_JOB
VerDate Sep<11>2014 09:16 Apr 04, 2023 Jkt 256165 PO 00000 Frm 00036 Fmt 8010 Sfmt 8010 Q:\40\256165.XXX PC31

63.6092 Are duct burners and waste heat recovery units covered by subpart YYYY?
63.6095 When do I have to comply with this subpart?

EMISSION AND OPERATING LIMITATIONS

63.6100 What emission and operating limitations must I meet?

GENERAL COMPLIANCE REQUIREMENTS

63.6105 What are my general requirements for complying with this subpart?

TESTING AND INITIAL COMPLIANCE REQUIREMENTS

63.6110 By what date must I conduct the initial performance tests or other initial compliance demonstrations?
63.6115 When must I conduct subsequent performance tests?
63.6120 What performance tests and other procedures must I use?
63.6125 What are my monitor installation, operation, and maintenance requirements?
63.6130 How do I demonstrate initial compliance with the emission and operating limitations?

CONTINUOUS COMPLIANCE REQUIREMENTS

63.6135 How do I monitor and collect data to demonstrate continuous compliance?
63.6140 How do I demonstrate continuous compliance with the emission and operating limitations?

NOTIFICATIONS, REPORTS, AND RECORDS

63.6145 What notifications must I submit and when?
63.6150 What reports must I submit and when?
63.6155 What records must I keep?
63.6160 In what form and how long must I keep my records?

OTHER REQUIREMENTS AND INFORMATION

63.6165 What parts of the General Provisions apply to me?
63.6170 Who implements and enforces this subpart?
63.6175 What definitions apply to this subpart?

TABLE 1 TO SUBPART YYYY OF PART 63—EMISSION LIMITATIONS
TABLE 2 TO SUBPART YYYY OF PART 63—OPERATING LIMITATIONS
TABLE 3 TO SUBPART YYYY OF PART 63—REQUIREMENTS FOR PERFORMANCE TESTS AND INITIAL COMPLIANCE DEMONSTRATIONS
TABLE 4 TO SUBPART YYYY OF PART 63—INITIAL COMPLIANCE WITH EMISSION LIMITATIONS
TABLE 5 TO SUBPART YYYY OF PART 63—CONTINUOUS COMPLIANCE WITH OPERATING LIMITATIONS
TABLE 6 TO SUBPART YYYY OF PART 63—REQUIREMENTS FOR REPORTS
TABLE 7 TO SUBPART YYYY OF PART 63—APPLICABILITY OF GENERAL PROVISIONS TO SUBPART YYYY

AUTHORITY: 42 U.S.C. 7401 *et seq.*

SOURCE: 57 FR 61992, Dec. 29, 1992, unless otherwise noted.

Subpart QQQ—National Emission Standards for Hazardous Air Pollutants for Primary Copper Smelting

SOURCE: 67 FR 40491, June 12, 2002, unless otherwise noted.

WHAT THIS SUBPART COVERS

§ 63.1440 What is the purpose of this subpart?

This subpart establishes national emission standards for hazardous air pollutants (NESHAP) for primary copper smelters. This subpart also establishes requirements to demonstrate initial and continuous compliance with all applicable emission limitations, work practice standards, and operation and maintenance requirements in this subpart.

§ 63.1441 Am I subject to this subpart?

You are subject to this subpart if you own or operate a primary copper smelter that is (or is part of) a major source of hazardous air pollutant (HAP) emissions and your primary copper smelter uses batch copper converters as defined in § 63.1459. Your primary copper smelter is a major source of HAP if it emits or has the potential to emit any single HAP at the rate of 10 tons or more per year or any combination of HAP at a rate of 25 tons or more per year.

[85 FR 73900, Nov. 19, 2020]

§ 63.1442 What parts of my plant does this subpart cover?

(a) This subpart applies to each new and existing affected source at your primary copper smelter. The affected sources are each copper concentrate dryer, each smelting furnace, each slag cleaning vessel, each copper converter department, and the entire group of fugitive emission sources, as defined in § 63.1459.

sfrattini on LAPJZKW1R2 with $$_JOB
VerDate Sep<11>2014 09:16 Apr 04, 2023 Jkt 256165 PO 00000 Frm 00037 Fmt 8010 Sfmt 8010 Q:\40\256165.XXX PC31

(b) An affected source at your primary copper smelter is existing if you commenced construction or reconstruction of the affected source before April 20, 1998.

(c) An affected source at your primary copper smelter is new if you commenced construction or reconstruction of the affected source on or after April 20, 1998. An affected source is reconstructed if it meets the definition of ''reconstruction'' in § 63.2.

§ 63.1443 When do I have to comply with this subpart?

(a) If you have an existing affected source, you must comply with each emission limitation, work practice standard, and operation and maintenance requirement in this subpart that applies to you no later than June 13, 2005.

(b) If you have a new affected source and its initial startup date is on or before June 12, 2002, you must comply with each emission limitation, work practice standard, and operation and maintenance requirement in this subpart that applies to you by June 12, 2002.

(c) If you have a new affected source and its initial startup date is after June 12, 2002, you must comply with each emission limitation, work practice standard, and operation and maintenance requirement in this subpart that applies to you upon initial startup.

(d) If your primary copper smelter is an area source that becomes a major source of HAP, the compliance dates listed in paragraphs (d)(1) and (2) of this section apply to you.

(1) Any portion of the existing primary copper smelter that is a new affected source or a new reconstructed source must be in compliance with this subpart upon startup.

(2) All other parts of the primary copper smelter must be in compliance with this subpart no later than 3 years after it becomes a major source.

(e) You must meet the notification and schedule requirements in § 63.1454. Several of these notifications must be submitted before the compliance date for your affected source.

EMISSION LIMITATIONS AND WORK PRACTICE STANDARDS

§ 63.1444 What emissions limitations and work practice standards must I meet for my copper concentrate dryers, smelting furnaces, slag cleaning vessels, and copper converter departments?

(a) *Copper concentrate dryers.* For each copper concentrate dryer, you must comply with the emission limitation in paragraph (a)(1) or (2) of this section that applies to you.

(1) For each existing copper concentrate dryer, you must not cause to be discharged to the atmosphere from the dryer vent any gases that contain total particulate matter in excess of 50 milligrams per dry standard cubic meter (mg/dscm) as measured using the test methods specified in § 63.1450(a).

(2) For each new copper concentrate dryer, you must not cause to be discharged to the atmosphere from the dryer vent any gases that contain total particulate matter in excess of 23 mg/dscm as measured using the test methods specified in § 63.1450(a).

(b) *Smelting furnaces.* For each smelting furnace, you must comply with the emission limitations and work practice standards in paragraphs (b)(1) and (2) of this section.

(1) For each smelting furnace, you must not cause to be discharged to the atmosphere any process off-gas that contains nonsulfuric acid particulate matter in excess of 6.2 mg/dscm as measured using the test methods specified in § 63.1450(b). Process off-gas from a smelting furnace is generated when copper ore concentrates and fluxes are being smelted to form molten copper matte and slag layers.

(2) For each smelting furnace, you must control the process fugitive emissions released when tapping copper matte or slag from the smelting furnace according to paragraphs (b)(2)(i) and (ii) of this section.

(i) At all times when copper matte or slag is tapped from the smelting furnace, you must operate a capture system that collects the gases and fumes released from the tapping port in use.

sfrattini on LAPJZKW1R2 with $$_JOB
VerDate Sep<11>2014 09:16 Apr 04, 2023 Jkt 256165 PO 00000 Frm 00038 Fmt 8010 Sfmt 8010 Q:\40\256165.XXX PC31

The design and placement of this capture system must be such that the tapping port opening, launder, and receiving vessel (e.g., ladle, slag pot) are positioned within the confines or influence of the capture system's ventilation draft during those times when the copper matte or slag is flowing from the tapping port opening.

(ii) You must not cause to be discharged to the atmosphere from the capture system used to comply with paragraph (b)(2)(i) of this section any gases that contain total particulate matter in excess of 23 mg/dscm as measured using the test methods specified in § 63.1450(a).

(c) *Slag cleaning vessels.* For each slag cleaning vessel, you must comply with the emission limitations and work practice standards in paragraphs (c)(1) through (3) of this section that apply to you.

(1) For each slag cleaning vessel, except as provided for in paragraph (c)(2) of this section, you must not cause to be discharged to the atmosphere any process off-gas that contains nonsulfuric acid particulate matter in excess of 6.2 mg/dscm as measured using the test methods specified in § 63.1450(b).

(2) As an alternative to complying with the emission limit for nonsulfuric acid particulate matter in paragraph (c)(1) of this section, for each existing slag cleaning vessel you may choose to comply with the emission limit for total particulate matter specified in this paragraph (c)(2). You must not cause to be discharged to the atmosphere any process off-gas that contains total particulate matter in excess of 46 mg/dscm as measured using the test methods specified in § 63.1450(a).

(3) For each slag cleaning vessel, you must control process fugitive emissions released when tapping copper matte or slag from the slag cleaning vessel according to paragraphs (c)(3)(i) and (ii) of this section.

(i) At all times when copper matte or slag is tapped from the slag cleaning vessel, you must operate a capture system that collects the gases and fumes released from the tapping port in use. The design and placement of this capture system must be such that the tapping port opening, launder, and receiving vessel (e.g., ladle, slag pot) are positioned within the confines or influence of the capture system's ventilation draft during those times when the copper matte or slag is flowing from the tapping port opening.

(ii) You must not cause to be discharged to the atmosphere from the capture system used to comply with paragraph (c)(3)(i) of this section any gases that contain total particulate matter in excess of 23 mg/dscm as measured using the test methods specified in § 63.1450(a).

(d) *Existing copper converter departments.* For each existing copper converter department, you must comply with the emission limitations and work practice standards in paragraphs (d)(1) through (6) of this section that apply to you.

(1) You must operate a capture system that collects the process off gas vented from each batch copper converter. At all times when one or more batch copper converters are blowing, you must operate the capture system according to the written operation and maintenance plan that has been prepared according to the requirements in § 63.1447(b).

(2) If your copper converter department uses Pierce-Smith converters, the capture system design must include use of a primary hood that covers the entire mouth of the converter vessel when the copper converter is positioned for blowing. Additional hoods (e.g., secondary hoods) or other capture devices must be included in the capture system design as needed to achieve the opacity limit in paragraph (d)(4) of this section. The capture system design may use multiple intake and duct segments through which the ventilation rates are controlled independently of each other, and individual duct segments may be connected to separate control devices.

(3) If your copper converter department uses Hoboken converters, the capture system must collect all process off-gas vented during blowing through the side-flue intake on each converter vessel.

(4) You must operate the capture system such that any visible emissions exiting the roof monitors or roof exhaust fans on the building housing the copper converter department meet the

sfrattini on LAPJZKW1R2 with $$_JOB
VerDate Sep<11>2014 09:16 Apr 04, 2023 Jkt 256165 PO 00000 Frm 00039 Fmt 8010 Sfmt 8010 Q:\40\256165.XXX PC31

opacity limit as specified in paragraphs (d)(4)(i) and (ii) of this section.

(i) The opacity of any visible emissions exiting the roof monitors or roof exhaust fans on the building housing the copper converter department must not exceed 4 percent as determined by a performance test conducted according to § 63.1450(c).

(ii) The opacity limit in paragraph (d)(4)(i) of this section applies only at those times when a performance test is conducted according to § 63.1450(c). The requirements for compliance with opacity and visible emission standards specified in § 63.6(h) do not apply to this opacity limit.

(5) You must not cause to be discharged to the atmosphere from any Pierce-Smith converter primary hood capture system or Hoboken converter side-flue intake capture system any process off-gas that contains nonsulfuric acid particulate matter in excess of 6.2 mg/dscm as measured using the test methods specified in § 63.1450(b).

(6) You must not cause to be discharged to the atmosphere from any secondary capture system any gases that contain total particulate matter in excess of 23 mg/dscm as measured using the test methods specified in § 63.1450(a).

(e) *New copper converter departments.* For each new copper converter department for which construction commenced on or after April 20, 1998, the use of batch copper converters is prohibited.

(f) *Baghouses.* For each baghouse applied to meet any total particulate matter emission limit in paragraphs (a) through (d) of this section, you must operate the baghouse such that the bag leak detection system does not alarm for more than 5 percent of the total operating time in any semiannual reporting period.

(g) *Venturi wet scrubbers.* For each venturi wet scrubber applied to meet any total particulate matter emission limit in paragraphs (a) through (d) of this section, you must maintain the hourly average pressure drop and scrubber water flow rate at or above the minimum levels established during the initial or subsequent performance test.

(h) *Other control devices.* For each control device other than a baghouse or venturi wet scrubber applied to meet any total particulate matter emission limit in paragraphs (a) through (d) of this section, you must operate the control device as specified in paragraphs (h)(1) and (2) of this section.

(1) You must select one or more operating parameters, as appropriate for the control device design, that can be used as representative and reliable indicators of the control device operation.

(2) You must maintain the hourly average value for each of the selected parameters at or above the minimum level or at or below the maximum level, as appropriate for the selected parameter, established during the initial or subsequent performance test.

§ 63.1445 What work practice standards must I meet for my fugitive dust sources?

(a) You must control particulate matter emissions from fugitive dust sources at your primary copper smelter by operating according to a written fugitive dust control plan that has been approved by the designated authority. For the purpose of complying with this paragraph (a) you may use an existing fugitive dust control plan provided that the plan complies with the requirements of this section. A fugitive dust control plan is considered to be approved if the plan has been incorporated in your applicable State implementation plan, and the document addresses the fugitive dust sources specified in paragraph (b) of this section and includes the information specified in paragraph (c) of this section.

(b) Your fugitive dust control plan must address each of the fugitive dust emission sources listed in paragraphs (b)(1) through (6) of this section that are located at your primary copper smelter.

(1) On-site roadways used by trucks or other motor vehicles (e.g., front-end loaders) when transporting bulk quantities of fugitive dust materials. Paved roads and parking areas that are not used by these vehicles do not need to be included in the plan (e.g., employee and visitor parking lots).

sfrattini on LAPJZKW1R2 with $$_JOB
VerDate Sep<11>2014 09:16 Apr 04, 2023 Jkt 256165 PO 00000 Frm 00040 Fmt 8010 Sfmt 8010 Q:\40\256165.XXX PC31

(2) Unloading of fugitive dust materials from trucks or railcars.

(3) Outdoor piles used for storage of fugitive dust materials.

(4) Bedding areas used for blending copper concentrate and other feed constituents.

(5) Each transfer point in conveying systems used to transport fugitive dust materials. These points include, but are not limited to, transfer of material from one conveyor belt to another and transfer of material to a hopper or bin.

(6) Other site-specific sources of fugitive dust emissions that the Administrator or delegated permitting authority designate to be included in your fugitive dust control plan.

(c) Your fugitive dust control plan must describe the control measures you use to control fugitive dust emissions from each source addressed in the plan, as applicable and appropriate for your site conditions. Examples of control measures include, but are not limited to, locating the source inside a building or other enclosure, installing and operating a local hood capture system over the source and venting the captured gas stream to a control device, placing material stockpiles below grade, installing wind screens or wind fences around the source, spraying water on the source as weather conditions require, applying appropriate dust suppression agents on the source, or combinations of these control measures.

(d) The requirement for you to operate according to a written fugitive dust control plan must be incorporated in your operating permit that is issued by the designated permitting authority under part 70 of this chapter. A copy of your fugitive dust control plan must be sent to the designated permitting authority on or before the compliance date for your primary copper smelter, as specified in §63.1443.

§63.1446 What alternative emission limitation may I meet for my combined gas streams?

(a) For situations where you combine gas streams from two or more affected sources for discharge to the atmosphere through a single vent, you may choose to meet the requirements in paragraph (b) of this section as an alternative to complying with the individual total particulate matter emission limits specified in §63.1444 that apply to you. This alternative emission limit for a combined gas stream may be used for any combination of the affected source gas steams specified in paragraphs (a)(1) through (5) of this section.

(1) Gas stream discharged from a copper concentrate dryer vent that would otherwise be subject to §63.1444(a)(1) or (2);

(2) Gas stream discharged from a smelting furnace capture system that would otherwise be subject to §63.1444(b)(2)(ii);

(3) Process off-gas stream discharged from a slag cleaning vessel that would otherwise be subject to §63.1444(c)(2);

(4) Gas stream discharged from a slag cleaning vessel capture system that would otherwise be subject to §63.1444(c)(3)(ii); and

(5) Gas stream discharged from a batch copper converter secondary capture system that would otherwise be subject to §63.1444(d)(5).

(b) You must meet the requirements specified in paragraphs (b)(1) and (2) of this section for the combined gas stream discharged through a single vent.

(1) For each combined gas stream discharged through a single vent, you must not cause to be discharged to the atmosphere any gases that contain total particulate matter in excess of the emission limit calculated using the procedure in paragraph (b)(2) of this section and measured using the test methods specified in §63.1450(a).

(2) You must calculate the alternative total particulate matter emission limit for your combined gas stream using Equation 1 of this section. The volumetric flow rate value for each of the individual affected source gas streams that you use for Equation 1 (i.e., the flow rate of the gas stream discharged from the affected source but before this gas stream is combined with the other gas streams) is to be the average of the volumetric flow rates measured using the test method specified in §63.1450(a)(1)(ii):

sfrattini on LAPJZKW1R2 with $$_JOB
VerDate Sep<11>2014 09:16 Apr 04, 2023 Jkt 256165 PO 00000 Frm 00041 Fmt 8010 Sfmt 8010 Q:\40\256165.XXX PC31

$$E_{Alt} = \frac{E_d Q_d + E_{sv} Q_{sv} + E_{scvp} Q_{scvp} + E_{scvf} Q_{scvf} + E_{cc} Q_{cc}}{Q_d + Q_{sv} + Q_{scvp} + Q_{scvf} + Q_{cc}} \quad \text{(Eq. 1)}$$

Where

E_{Alt} = Alternative total particulate matter emission limit for the combined gas stream discharged to atmosphere through a single vent (mg/dscm);

E_d = Total particulate matter emission limit applicable to copper concentrate dryer as specified in § 63.1444(a)(1) or (2) (mg/dscm);

Q_d = Copper concentrate dryer exhaust gas stream volumetric flow rate before being combined with other gas streams (dscm);

E_{sv} = Total particulate matter emission limit for smelting furnace capture system as specified in § 63.1444(b)(2)(ii) (mg/dscm);

Q_{sv} = Smelting furnace capture system exhaust gas stream volumetric flow rate before being combined with other gas streams (dscm);

E_{scvp} = Total particulate matter emission limit for slag cleaning vessel process off-gas as specified in § 63.1444(c)(2) (mg/dscm);

Q_{scvp} = Slag cleaning vessel process off-gas volumetric flow rate before being combined with other gas streams (dscm);

E_{scvf} = Total particulate matter emission limit for slag cleaning vessel capture system as specified in § 63.1444(c)(3)(ii) (mg/dscm);

Q_{scvf} = Slag cleaning vessel capture system exhaust gas stream volumetric flow rate before being combined with other gas streams (dscm);

E_{cc} = Total particulate emission limit for the batch copper converter secondary capture system as specified in § 63.1544(d)(5) (mg/dscm); and

Q_{cc} = Batch copper converter capture system exhaust gas stream volumetric flow rate before being combined with other gas streams (dscm).

(c) For each baghouse applied to meet any total particulate matter emission limit in paragraph (b) of this section, you must operate the baghouse such that the bag leak detection system does not alarm for more than 5 percent of the total operating time in any semiannual reporting period.

(d) For each venturi wet scrubber applied to meet any total particulate matter emission limit in paragraph (b) of this section, you must maintain the hourly average pressure drop and scrubber water flow rate at or above the minimum levels established during the initial or subsequent performance test.

(e) For each control device other than a baghouse or venturi wet scrubber applied to meet any total particulate matter emission limit in paragraph (b) of this section, you must operate the control device as specified in paragraphs (e)(1) and (2) of this section.

(1) You must select one or more operating parameters, as appropriate for the control device design, that can be used as representative and reliable indicators of the control device operation.

(2) You must maintain the hourly average value for each of the selected parameters at or above the minimum level or at or below the maximum level, as appropriate for the selected parameter, established during the initial or subsequent performance test.

OPERATION AND MAINTENANCE REQUIREMENTS

§ 63.1447 What are my operation and maintenance requirements?

(a) As required by § 63.6(e)(1)(i), you must always operate and maintain your affected source, including air pollution control and monitoring equipment, in a manner consistent with good air pollution control practices for minimizing emissions at least to the levels required by this subpart.

(b) You must prepare and operate at all times according to a written operation and maintenance plan for each capture system and control device subject to standards in § 63.1444 or § 63.1446. The plan must address the requirements in paragraphs (b)(1) through (3) of this section as applicable to the capture system or control device.

(1) *Preventative maintenance.* You must perform preventative maintenance for each capture system and control device according to written procedures specified in your operation and maintenance plan. The procedures must include a preventative maintenance schedule that is consistent with

sfrattini on LAPJZKW1R2 with $$_JOB
VerDate Sep<11>2014 09:16 Apr 04, 2023 Jkt 256165 PO 00000 Frm 00042 Fmt 8010 Sfmt 8010 Q:\40\256165.XXX PC31
ER12JN02.025

the manufacturer's instructions for routine and long-term maintenance.

(2) *Capture system inspections.* You must conduct monthly inspections of the equipment components of the capture system that can affect the performance of the system to collect the gases and fumes emitted from the affected source (e.g., hoods, exposed ductwork, dampers, fans) according to written procedures specified in your operation and maintenance plan. The inspection procedure must include the requirements in paragraphs (b)(2)(i) through (iii) of this section as applicable to the capture system or control device.

(i) Observations of the physical appearance of the equipment to confirm the physical integrity of the equipment (e.g., verify by visual inspection no holes in ductwork or hoods, no flow constrictions caused by dents, or accumulated dust in ductwork).

(ii) Inspection, and if necessary testing, of equipment components to confirm that the component is operating as intended (e.g., verify by appropriate measures that flow or pressure sensors, damper plates, automated damper switches and motors are operating according to manufacture or engineering design specifications).

(iii) In the event that a defective or damaged component is detected during an inspection, you must initiate corrective action according to written procedures specified in your operation and maintenance plan to correct the defect or deficiency as soon as practicable.

(3) *Copper converter department capture system operating limits.* You must establish, according to the requirements in paragraph (b)(3)(i) through (iii) of this section, operating limits for the capture system that are representative and reliable indicators of the performance of capture system when it is used to collect the process off-gas vented from batch copper converters during blowing.

(i) Select operating limit parameters appropriate for the capture system design that are representative and reliable indicators of the performance of the capture system when it is used to collect the process off-gas vented from batch copper converters during blowing. At a minimum, you must use appropriate operating limit parameters that indicate the level of the ventilation draft and the damper position settings for the capture system when operating to collect the process off-gas from the batch copper converters during blowing. Appropriate operating limit parameters for ventilation draft include, but are not limited to, volumetric flow rate through each separately ducted hood, total volumetric flow rate at the inlet to control device to which the capture system is vented, fan motor amperage, or static pressure. Any parameter for damper position setting may be used that indicates the duct damper position relative to the fully open setting.

(ii) For each operating limit parameter selected in paragraph (b)(3)(i) of this section, designate the value or setting for the parameter at which the capture system operates during batch copper converter blowing. If your blister copper production operations allow for more than one batch copper converter to be operating simultaneously in the blowing mode, designate the value or setting for the parameter at which the capture system operates during each possible batch copper converter blowing configuration that you may operate at your smelter (i.e., the operating limits with one converter blowing, with two converters blowing, with three converters blowing, as applicable to your smelter).

(iii) Include documentation in the plan to support your selection of the operating limits established for the capture system. This documentation must include a description of the capture system design, a description of the capture system operation during blister copper production, a description of each selected operating limit parameter, a rationale for why you chose the parameter, a description of the method used to monitor the parameter according to the requirements in §63.1452(a), and the data used to set the value or setting for the parameter for each of your batch copper converter configurations.

(4) *Baghouse leak detection corrective actions.* In the event a bag leak detection system alarm is triggered, you

sfrattini on LAPJZKW1R2 with $$_JOB
VerDate Sep<11>2014 09:16 Apr 04, 2023 Jkt 256165 PO 00000 Frm 00043 Fmt 8010 Sfmt 8010 Q:\40\256165.XXX PC31

must initiate corrective action according to written procedures specified in your operation and maintenance plan to determine the cause of the alarm within 1 hour of the alarm, initiate corrective action to correct the cause of the problem within 24 hours of the alarm, and complete the corrective action as soon as practicable. Corrective actions may include, but are not limited to, the activities listed in paragraphs (b)(3)(i) through (vi) of this section.

(i) Inspecting the baghouse for air leaks, torn or broken bags or filter media, or any other condition that may cause an increase in emissions.

(ii) Sealing off defective bags or filter media.

(iii) Replacing defective bags or filter media or otherwise repairing the control device.

(iv) Sealing off a defective baghouse compartment.

(v) Cleaning the bag leak detection system probe, or otherwise repair the bag leak detection system.

(vi) Shutting down the process producing the particulate emissions.

GENERAL COMPLIANCE REQUIREMENTS

§ 63.1448 What are my general requirements for complying with this subpart?

(a) You must be in compliance with the emission limitations, work practice standards, and operation and maintenance requirements in this subpart at all times, except during periods of startup, shutdown, and malfunction as defined in § 63.2.

(b) During the period between the compliance date specified for your affected source in § 63.1443, and the date upon which continuous monitoring systems have been installed and certified and any applicable operating limits have been set, you must maintain a log detailing the operation and maintenance of the process and emissions control equipment.

(c) You must develop a written startup, shutdown, and malfunction plan according to the provisions in § 63.6(e)(3).

[57 FR 61992, Dec. 29, 1992, as amended at 71 FR 20461, Apr. 20, 2006]

INITIAL COMPLIANCE REQUIREMENTS

§ 63.1449 By what dates must I conduct performance tests or other initial compliance demonstrations?

(a) As required in § 63.7(a)(2), you must conduct a performance test within 180 calendar days of the compliance date that is specified in § 63.1443 for your affected source to demonstrate initial compliance with each emission and opacity limit in §§ 63.1443 and 63.1446 that applies to you.

(b) For each work practice standard and operation and maintenance requirement that applies to you where initial compliance is not demonstrated using a performance test or opacity observation, you must demonstrate initial compliance within 30 calendar days after the compliance date that is specified for your affected source in § 63.1443.

§ 63.1450 What test methods and other procedures must I use to demonstrate initial compliance with the emission limitations?

(a) *Total particulate matter emission limits.* You must conduct each performance test to determine compliance with the total particulate matter emission limits in § 63.1444 or § 63.1446 that apply to you according to the requirements for representative test conditions specified in § 63.7(e)(1) and using the test methods and procedures in paragraphs (a)(1) through (5) of this section.

(1) Determine the concentration of total particulate matter according to the test methods in appendix A to part 60 of this chapter as specified in paragraphs (a)(1)(i) through (iii) of this section.

(i) Method 1 to select sampling port locations and the number of traverse points. Sampling ports must be located at the outlet of the control device and prior to any releases to the atmosphere.

(ii) Method 2, 2F, or 2G to determine the volumetric flow rate of the stack gas.

(iii) Method 3, 3A, or 3B to determine the dry molecular weight of the stack gas.

(iv) Method 4 to determine the moisture content of the stack gas.

(v) Method 5, 5D, or 17, as applicable, to determine the concentration of total

sfrattini on LAPJZKW1R2 with $$_JOB
VerDate Sep<11>2014 09:16 Apr 04, 2023 Jkt 256165 PO 00000 Frm 00044 Fmt 8010 Sfmt 8010 Q:\40\256165.XXX PC31

particulate matter. You can also use ASTM D4536–96 incorporated by reference in §63.14 as an alternative to the sampling equipment and operating procedures in Method 5 or 17 when testing a positive pressure baghouse, but you must use the sample traverse location and number of sampling points described in Method 5D.

(2) As an alternative to using the applicable method specified in paragraph (a)(1)(v) of this section, you may determine total particulate matter emissions from the control device using Method 29 in appendix A of part 60 of this chapter provided that you follow the procedures and precautions prescribed in Method 29. If the control device is a positive pressure baghouse, you must also follow the measurement procedure specified in sections 4.1 through 4.3 of Method 5D.

(3) You must conduct three separate test runs for each performance test. Each test run must have a minimum sampling time of 60 minutes and a minimum sampling volume of 0.85 dscm. For the purpose of determining compliance with the applicable total particulate matter emission limit, the arithmetic mean of the results for the three separate test runs is used.

(4) For a venturi wet scrubber applied to emissions from an affected source and subject to operating limits in §63.1444(g) or §63.1446(d) for pressure drop and scrubber water flow rate, you must establish site-specific operating limits according to the procedures in paragraph (a)(4)(i) and (ii) of this section.

(i) Using the continuous parameter monitoring system (CPMS) required in §63.1452, measure and record the pressure drop and scrubber water flow rate during each run of the particulate matter performance test.

(ii) Compute and record the hourly average pressure drop and scrubber water flow rate for each individual test run. Your operating limits are the lowest average pressure drop and scrubber water flow rate value in any of the three runs that meet the applicable emission limit.

(5) For a control device other than a baghouse or venturi wet scrubber applied to emissions from an affected source and subject to site-specific operating limit(s) in §63.1444(h) or §63.1446(e) for appropriate, site-specific operating parameters that are representative and reliable indicators of the control device performance, you must establish a site-specific operating limit(s) according to the procedures in paragraph (a)(5)(i) through (iv) of this section.

(i) Select one or more operating parameters, as appropriate for the control device design, that can be used as representative and reliable indicators of the control device operation.

(ii) Using the CPMS required in §63.1452, measure and record the selected operating parameters for the control device during each run of the total particulate matter performance test.

(iii) Compute and record the hourly average value for each of the selected operating parameters for each individual test run. Your operating limits are the lowest value or the highest value, as appropriate for the selected operating parameter, measured in any of the three runs that meet the applicable emission limit.

(iv) You must prepare written documentation to support your selection of the operating parameters used for the control device. This documentation must include a description of each selected parameter, a rationale for why you chose the parameter, a description of the method used to monitor the parameter, and the data recorded during the performance test and used to set the operating limit(s).

(b) *Nonsulfuric acid particulate matter emission limits.* You must conduct each performance test to determine compliance with the nonsulfuric acid particulate matter emission limits in §63.1444 that apply to you according to the requirements for representative test conditions specified in §63.7(e)(1) and using the test methods and procedures in paragraphs (b)(1) and (2) of this section.

(1) Determine the concentration of nonsulfuric acid particulate matter according to the test methods in appendix A to part 60 of this chapter as specified in paragraphs (b)(1)(i) through (v) of this section.

(i) Method 1 to select sampling port locations and the number of traverse points. Sampling ports must be located

sfrattini on LAPJZKW1R2 with $$_JOB
VerDate Sep<11>2014 09:16 Apr 04, 2023 Jkt 256165 PO 00000 Frm 00045 Fmt 8010 Sfmt 8010 Q:\40\256165.XXX PC31

at the outlet of the control device and prior to any releases to the atmosphere.

(ii) Method 2, 2F, or 2G to determine the volumetric flow rate of the stack gas.

(iii) Method 3, 3A, or 3B to determine the dry molecular weight of the stack gas.

(iv) Method 4 to determine the moisture content of the stack gas.

(v) Method 5B to determine the nonsulfuric acid particulate matter emissions.

(2) You must conduct three separate test runs for each performance test. Each test run must have a minimum sampling time of 240 minutes and a minimum sampling volume of 3.4 dscm. For the purpose of determining compliance with the nonsulfuric acid particulate matter emission limit, the arithmetic mean of the results for the three separate test runs is used.

(c) *Copper converter department capture system opacity limit*. You must conduct each performance test to determine compliance with the opacity limit in § 63.1444 using the test methods and procedures in paragraphs (c)(1) through (9) of this section.

(1) You must conduct the performance test during the period when the primary copper smelter is operating under conditions representative of the smelter's normal blister copper production rate. You may not conduct a performance test during periods of startup, shutdown, or malfunction. Before conducting the performance test, you must prepare a written test plan specifying the copper production conditions to be maintained throughout the opacity observation period and including a copy of the written documentation you have prepared according to paragraph (a)(3) of this section to support the established operating limits for the copper converter department capture system. You must submit a copy of the test plan for review and approval by the Administrator or delegated authority. During the observation period, you must collect appropriate process information and copper converter department capture system operating information to prepare documentation sufficient to verify that all opacity observations were made during the copper production and capture system operating conditions specified in the approved test plan.

(2) You must notify the Administrator or delegated authority before conducting the opacity observations to allow the Administrator or delegated authority the opportunity to have authorized representatives attend the test. Written notification of the location and scheduled date for conducting the opacity observations must be received by the Administrator on or before 30 calendar days before this scheduled date.

(3) You must gather the data needed for determining compliance with the opacity limit using qualified visible emission observers and process monitors as described in paragraphs (c)(3)(i) and (ii) of this section.

(i) Opacity observations must be performed by a sufficient number of qualified visible emission observers to obtain two complete concurrent sets of opacity readings for the required observation period. Each visible emission observer must be certified as a qualified observer by the procedure specified in section 3 of Method 9 in appendix A of part 60 of this chapter. The entire set of readings during the required observation period does not need to be made by the same two observers. More than two observers may be used to allow for substitutions and provide for observer rest breaks. The owner or operator must obtain proof of current visible emission reading certification for each observer.

(ii) A person (or persons) familiar with the copper production operations conducted at the smelter must serve as the indoor process monitor. The indoor process monitor is stationed at a location inside the building housing the batch copper converters such that he or she can visually observe and record operations that occur in the batch copper converter aisle during the times that the visible emission observers are making opacity readings. More than one indoor process monitor may be used to allow for substitutions and provide for rest breaks.

(4) You must make all opacity observations using Method 9 in appendix A to part 60 of this chapter and following

sfrattini on LAPJZKW1R2 with $$_JOB
VerDate Sep<11>2014 09:16 Apr 04, 2023 Jkt 256165 PO 00000 Frm 00046 Fmt 8010 Sfmt 8010 Q:\40\256165.XXX PC31

the procedures described in paragraphs (c)(4)(i) and (ii) of this section.

(i) Each visible emission observer must make his or her readings at a position from the outside of the building that houses the copper converter department such that the observer's line-of-sight is approximately perpendicular to the longer axis of the converter building, and the observer has an unobstructed view of the building roof monitor sections or roof exhaust fan outlets that are positioned over each of the batch copper converters inside the building. Opacity readings can only be made during those times when the observer's position meets the sun orientation and other conditions specified in section 2.1 of Method 9.

(ii) At 15-second intervals, each visible emission observer views the building roof monitor sections or roof exhaust fan outlets that are positioned over each of the batch copper converters inside the building and reads the opacity of the visible plumes. If no plume is visible, the observer records zero as the opacity value for the 15-second interval. In situations when it is possible for an observer to distinguish two or more visible emission plumes from the building roof monitor sections or roof exhaust fan outlets, the observer must identify, to the extent feasible, the plume having the highest opacity and record his or her opacity reading for that plume as the opacity value for the 15-second interval.

(5) You must make opacity observations for a period of sufficient duration to obtain a minimum of 120 1-minute intervals during which at least one copper converter is blowing and no interferences have occurred from other copper production events, as specified in paragraph (c)(7) of this section, which generate visible emissions inside the building that potentially can interfere with the visible emissions from the converter capture systems as seen by the outside observers. To obtain the required number of 1-minute intervals, the observation period may be divided into two or more segments performed on the same day or on different days if conditions prevent the required number of opacity readings from being obtained during one continuous time period. Examples of these conditions include, but are not limited to, changes in the sun's orientation relative to visible emission observers' positions such that the Method 9 conditions are no longer met or an unexpected thunder storm. If the total observation period is divided into two or more segments, all opacity observations must be made during the same set of copper production conditions described in your approved test plan as required by paragraph (c)(1) of this section.

(6) You must gather indoor process information during all times that the visible emission observers are making opacity readings outside the building housing the copper converter department. The indoor process monitor must continually observe the operations occurring in the copper converter department and prepare a written record of his or her observations using the procedure specified in paragraphs (c)(6)(i) through (iv) of this section.

(i) At the beginning of each observation period or segment, the clock time setting on the watch or clock to be used by the indoor process monitor must be synchronized with the clock time settings for the timepieces to be used by the outdoor opacity observers.

(ii) During each period or segment when opacity readings are being made by the visible emission observers, the indoor process monitor must continuously observe the operations occurring in the copper converter department and record his or her observations in a log book, on data sheets, or other type of permanent written format.

(iii) When a batch copper converter is blowing, a record must be prepared for the converter that includes, but is not limited to, the clock times for when blowing begins and when blowing ends and the converter blowing rate. This information may be recorded by the indoor process monitor or by a separate, automated computer data system.

(iv) The process monitor must record each event other than converter blowing that occurs in or nearby the converter aisle that he or she observes to generate visible emissions inside the building. The recorded entry for each event must include, but is not limited to, a description of the event and the clock times when the event begins and when the event ends.

sfrattini on LAPJZKW1R2 with $$_JOB
VerDate Sep<11>2014 09:16 Apr 04, 2023 Jkt 256165 PO 00000 Frm 00047 Fmt 8010 Sfmt 8010 Q:\40\256165.XXX PC31

(7) You must prepare a summary of the data for the entire observation period using the information recorded during the observation period by the outdoor visible emission observers and the indoor process monitor and the procedure specified in paragraphs (c)(7)(i) through (iv) of this section.

(i) Using the field data sheets, identify the 1-minute clock times for which a total of eight opacity readings were made and recorded by both observers at 15-second intervals according to the test procedures (i.e., a total of four opacity values have been recorded for the 1-minute interval by each of the two observers). Calculate the average of the eight 15-second interval readings recorded on the field data sheets by the two observers during the clock time minute interval (add the four consecutive 15-second interval opacity readings made by Observer A during the specified clock time minute, plus the four consecutive 15-second interval opacity readings made by Observer B during the same clock time minute, and divide the resulting total by eight). Record the clock time and the opacity average for the 1-minute interval on a data summary sheet. Figure 1 of this subpart shows an example of the format for the data summary sheet you may use, but are not required to use.

(ii) Using the data summary sheets prepared according to paragraph (c)(7)(i) of this section and the process information recorded according to paragraph (c)(6)(iii) of this section, identify those 1-minute intervals for which at least one of the batch copper converters was blowing.

(iii) Using the data summary sheets prepared according to paragraph (c)(7)(ii) of this section and the process information recorded according to paragraph (c)(6)(iv) of this section, identify the 1-minute intervals during which at least one copper converter was blowing but none of the interference events listed in paragraphs (c)(7)(iii)(A) through (F) of this section occurred. Other ancillary activities not listed but conducted in or adjacent to the converter aisle during the opacity observations are not considered to be interference events (e.g., converter aisle cleaning, placement of smoking ladles or skulls on the converter aisle floor).

(A) Charging of copper matte, reverts, or other materials to a batch copper converter;

(B) Skimming slag or other molten materials from a batch copper converter;

(C) Pouring of blister copper or other molten materials from a batch copper converter;

(D) Return of slag or other molten materials to the flash smelting furnace or slag cleaning vessel;

(E) Roll-out or roll-in of the batch copper converter; or

(F) Smoke and fumes generated inside the converter building by operation of the smelting furnace, the slag cleaning vessel (if used), anode refining and casting processes that drift into the copper converter department.

(iv) Using the data summary sheets prepared according to paragraph (c)(7)(iii) of this section, up to five 1-minute intervals following an interference event may be eliminated from data used for the compliance determination calculation specified in paragraph (c)(8) of this section by applying a time delay factor. The time delay factor must be a constant number of minutes not to exceed 5 minutes that is added to the clock time recorded when cessation of the interference event occurs. The same time delay factor must be used for all interference events (i.e., a constant time delay factor for the smelter of 1 minute, 2 minutes, 3 minutes, 4 minutes, or 5 minutes). The number of minutes to be used for the time delay factor is determined based on the site-specific equipment and converter building configuration. An explanation of the rationale for selecting the value used for the time delay factor must be prepared and included in the test report.

(8) You must use the data summary prepared in paragraph (c)(7) of this section to calculate the average opacity value for a minimum of 120 1-minute intervals during which at least one copper converter was blowing with no interference events as determined according to paragraphs (c)(7)(iii) and (iv) of this section. Average opacity is calculated using Equation 1 of this section:

sfrattini on LAPJZKW1R2 with $$_JOB
VerDate Sep<11>2014 09:16 Apr 04, 2023 Jkt 256165 PO 00000 Frm 00048 Fmt 8010 Sfmt 8010 Q:\40\256165.XXX PC31

$$VE_{ave} = \frac{1}{n}\sum_{i=1}^{n} VE_i \qquad \text{(Eq. 1)}$$

Where

VE_{ave} = Average opacity to be used for compliance determination (percent);

n = Total number of 1-minute intervals during which at least one copper converter was blowing with no interference events as determined according to paragraphs (c)(7)(iii) and (iv) of this section (at least 120 1-minute intervals);

i = 1-minute interval ''i'' during which at least one copper converter was blowing with no interference events as determined according to paragraphs (c)(7)(iii) and (iv) of this section; and

VE_i = Average opacity value calculated for the eight opacity readings recorded during 1-minute interval ''i'' (percent).

(9) You must certify that the copper converter department capture system operated during the performance test at the operating limits established in your capture system operation and maintenance plan using the procedure specified in paragraphs (c)(9)(i) through (iv) of this section.

(i) Concurrent with all opacity observations, measure and record values for each of the operating limit parameters in your capture system operation and maintenance plan according to the monitoring requirements specified in § 63.1452(a).

(ii) For any dampers that are manually set and remain in the same position at all times the capture system is operating, the damper position must be visually checked and recorded at the beginning and end of each opacity observation period segment.

(iii) Review the recorded monitoring data. Identify and explain any times during batch copper converter blowing when the capture system operated outside the applicable operating limits.

(iv) Certify in your performance test report that during all observation period segments, the copper converter department capture system was operating at the values or settings established in your capture system operation and maintenance plan.

§ 63.1451 How do I demonstrate initial compliance with the emission limitations, work practice standards, and operation and maintenance requirements that apply to me?

(a) *Total particulate matter emission limits*. For each copper concentrate dryer, smelting furnace, slag cleaning vessel, and copper converter department subject to a total particulate matter emission limits in § 63.1444 or § 63.1446 that applies to you, you have demonstrated initial compliance if you meet both of the conditions in paragraphs (a)(1) and (2) of this section.

(1) The average concentration of total particulate matter from a control device applied to emissions from the affected source, measured according to the performance test procedures in § 63.1450(a), did not exceed the applicable emission limit.

(2) You have submitted a notification of compliance status according to the requirements in § 63.1454(e).

(b) *Nonsulfuric acid particulate matter emissions limits*. For each smelting furnace, slag cleaning vessel, and copper converter departments subject to the nonsulfuric acid particulate matter emissions limit in § 63.1444 as applies to you, you have demonstrated initial compliance if you meet both of the conditions in paragraphs (b)(1) and (2) of this section.

(1) The average concentration of nonsulfuric acid particulate matter in the process off-gas discharged from the affected source, measured according to the performance test procedures in § 63.1450(b), did not exceed 6.2 mg/dscm.

(2) You have submitted a notification of compliance status according to the requirements in § 63.1454(e).

(c) For each existing copper converter department subject to the opacity limit in § 63.1444, you have demonstrated initial compliance if you meet both of the conditions in paragraphs (c)(1) and (2) of this section.

(1) The opacity of visible emissions exiting the roof monitors or roof exhaust fans on the building housing the copper converter department measured according to the performance test procedures in § 63.1450(c), did not exceed 4 percent opacity.

sfrattini on LAPJZKW1R2 with $$_JOB
VerDate Sep<11>2014 09:16 Apr 04, 2023 Jkt 256165 PO 00000 Frm 00049 Fmt 8010 Sfmt 8010 Q:\40\256165.XXX PC31
ER12JN02.026

(2) You have submitted a notification of compliance status according to the requirements in § 63.1454(e).

(d) *Copper converter department capture systems.* You have demonstrated initial compliance of the copper converter department capture system if you meet all of the conditions in paragraphs (d)(1) through (4) of this section.

(1) Prepared the capture system operation and maintenance plan according to the requirements of paragraph (a) of this section;

(2) Conducted an initial performance test according to the procedures of § 63.1450(c) demonstrating the opacity of any visible emissions exiting the roof monitors or roof exhaust fans on the building housing the copper converter department does not exceed 4 percent opacity;

(3) Included in your notification of compliance status a copy of your written capture system operation and maintenance plan and have certified in your notification of compliance status that you will operate the copper converter department capture system at all times during blowing at the values or settings established for the operating limits in that plan; and

(4) Submitted a notification of compliance status according to the requirements in § 63.1454(e).

(e) *Baghouses.* For each baghouse subject to operating limits in § 63.1444(f) or § 63.1446(c), you have demonstrated initial compliance if you meet all of the conditions in paragraphs (e)(1) through (3) of this section.

(1) You have included in your written operation and maintenance plan required under § 63.1447(b) detailed descriptions of the procedures you use for inspection, maintenance, bag leak detection, and corrective action for the baghouse.

(2) You have certified in your notification of compliance status that you will operate the baghouse according to your written operation and maintenance plan.

(3) You have submitted the notification of compliance status according to the requirements in § 63.1454(e).

(f) *Venturi wet scrubbers.* For each venturi wet scrubber subject to operating limits in § 63.1444(g) or § 63.1446(d), you have demonstrated initial compliance if you meet all of the conditions in paragraphs (f)(1) through (3) of this section.

(1) Established site-specific operating limits for pressure drop and scrubber water flow rate and have a record of the pressure drop and scrubber water flow rate measured during the performance test you conduct to demonstrate initial compliance with paragraph (a) of this section.

(2) Certified in your notification of compliance status that you will operate the venturi wet scrubber within the established operating limits for pressure drop and scrubber water flow rate.

(3) Submitted a notification of compliance status according to the requirements in § 63.1454(e).

(g) *Other control devices.* For each control device other than a baghouse or venturi wet scrubber subject to operating limits in § 63.1444(h) or § 63.1446(e), you have demonstrated initial compliance if you meet all of the conditions in paragraphs (g)(1) through (4) of this section.

(1) Selected one or more operating parameters, as appropriate for the control device design, that can be used as representative and reliable indicators of the control device operation.

(2) Established site-specific operating limits for each of the selected operating parameters based on values measured during the performance test you conduct to demonstrate initial compliance with paragraph (a) of this section and have prepared written documentation according to the requirements in § 63.1450(a)(5)(iv).

(3) Included in your notification of compliance status a copy of the written documentation you have prepared to demonstrate compliance with paragraph (g)(2) of this section and have certified in your notification of compliance status that you will operate the control device within the established operating limits.

(4) Submitted a notification of compliance status according to the requirements in § 63.1454(e).

(h) *Fugitive dust sources.* For all fugitive dust sources subject to work practice standards in § 63.1445, you have demonstrated initial compliance if you meet all of the conditions in paragraphs (i)(1) through (3) of this section.

sfrattini on LAPJZKW1R2 with $$_JOB
VerDate Sep<11>2014 09:16 Apr 04, 2023 Jkt 256165 PO 00000 Frm 00050 Fmt 8010 Sfmt 8010 Q:\40\256165.XXX PC31

(1) Prepared a written fugitive dust control plan according to the requirements in §63.1454 and it has been approved by the designated authority.

(2) Certified in your notification of compliance status that you will control emissions from the fugitive dust sources according to the procedures in the approved plan.

(3) Submitted the notification of compliance status according to the requirements in §63.1454(e).

(i) *Operation and maintenance requirements.* You have demonstrated initial compliance with the operation and maintenance requirements that apply to you if you meet all of the conditions in paragraphs (i)(1) through (3) of this section.

(1) Prepared an operation and maintenance plan according to the requirements in §63.1454(b).

(2) Certified in your notification of compliance status that you will operate each capture system and control device according to the procedures in the plan.

(3) Submitted the notification of compliance status according to the requirements in §63.1454(e).

CONTINUOUS COMPLIANCE REQUIREMENTS

§63.1452 What are my monitoring requirements?

(a) *Copper converter department capture systems.* For each operating limit established under your capture system operation and maintenance plan, you must install, operate, and maintain an appropriate monitoring device according the requirements in paragraphs (a)(1) though (6) of this section to measure and record the operating limit value or setting at all times the copper converter department capture system is operating during batch copper converter blowing. Dampers that are manually set and remain in the same position at all times the capture system is operating are exempted from the requirements of this paragraph (a).

(1) Install the monitoring device, associated sensor(s), and recording equipment according to the manufacturers' specifications. Locate the sensor(s) used for monitoring in or as close to a position that provides a representative measurement of the parameter being monitored.

(2) If a flow measurement device is used to monitor the operating limit parameter, you must meet the requirements in paragraph (a)(2)(i) through (iv) of this section.

(i) Locate the flow sensor and other necessary equipment such as straightening vanes in a position that provides a representative flow.

(ii) Use a flow sensor with a minimum tolerance of 2 percent of the flow rate.

(iii) Reduce swirling flow or abnormal velocity distributions due to upstream and downstream disturbances.

(iv) Conduct a flow sensor calibration check at least semiannually.

(3) If a pressure measurement device is used to monitor the operating limit parameter, you must meet the requirements in paragraph (a)(3)(i) through (v) of this section.

(i) Locate the pressure sensor(s) in or as close to a position that provides a representative measurement of the pressure.

(ii) Minimize or eliminate pulsating pressure, vibration, and internal and external corrosion.

(iii) Use a gauge with a minimum tolerance of 0.5 inch of water or a transducer with a minimum tolerance of 1 percent of the pressure range.

(iv) Check pressure tap pluggage daily.

(v) Using a manometer, check gauge calibration quarterly and transducer calibration monthly.

(4) Conduct calibration and validation checks any time the sensor exceeds the manufacturer's specifications or you install a new sensor.

(5) At least monthly, inspect all components for integrity, all electrical connections for continuity, and all mechanical connections for leakage.

(6) Record the results of each inspection, calibration, and validation check.

(b) *Baghouses.* For each baghouse subject to the operating limit in §63.1444(f) or §63.1446(c) for the bag leak detection system alarm, you must at all times monitor the relative change in particulate matter loadings using a bag leak detection system according to the requirements in paragraph (b)(1) of this

sfrattini on LAPJZKW1R2 with $$_JOB
VerDate Sep<11>2014 09:16 Apr 04, 2023 Jkt 256165 PO 00000 Frm 00051 Fmt 8010 Sfmt 8010 Q:\40\256165.XXX PC31

section and conduct regular inspections according to the requirements in paragraph (b)(2) of this section.

(1) You must install, operate, and maintain each bag leak detection system according to the requirements in paragraphs (b)(1)(i) through (vii) of this section.

(i) The system must be certified by the manufacturer to be capable of detecting emissions of particulate matter at concentrations of 10 milligrams per actual cubic meter (0.0044 grains per actual cubic foot) or less.

(ii) The system must provide output of relative changes in particulate matter loadings.

(iii) The system must be equipped with an alarm that will sound when an increase in relative particulate loadings is detected over a preset level. The alarm must be located such that it can be heard by the appropriate plant personnel.

(iv) Each system that works based on the triboelectric effect must be installed, operated, and maintained in a manner consistent with the guidance document, ''Fabric Filter Bag Leak Detection Guidance,'' EPA–454/R–98–015, September 1997. You may obtain a copy of this guidance document by contacting the National Technical Information Service (NTIS) at 800–553–6847. You may install, operate, and maintain other types of bag leak detection systems in a manner consistent with the manufacturer's written specifications and recommendations.

(v) To make the initial adjustment of the system, establish the baseline output by adjusting the sensitivity (range) and the averaging period of the device. Then, establish the alarm set points and the alarm delay time.

(vi) Following the initial adjustment, do not adjust the sensitivity or range, averaging period, alarm set points, or alarm delay time, except as detailed in your operation and maintenance plan. Do not increase the sensitivity by more than 100 percent or decrease the sensitivity by more than 50 percent over a 365-day period unless a responsible official certifies, in writing, that the baghouse has been inspected and found to be in good operating condition.

(vii) Where multiple detectors are required, the system's instrumentation and alarm may be shared among detectors.

(2) You must conduct baghouse inspections at their specified frequencies according to the requirements in paragraphs (b)(2)(i) through (viii) of this section.

(i) Monitor the pressure drop across each baghouse cell each day to ensure pressure drop is within the normal operating range identified in the manual.

(ii) Confirm that dust is being removed from hoppers through weekly visual inspections or other means of ensuring the proper functioning of removal mechanisms.

(iii) Check the compressed air supply for pulse-jet baghouses each day.

(iv) Monitor cleaning cycles to ensure proper operation using an appropriate methodology.

(v) Check bag cleaning mechanisms for proper functioning through monthly visual inspection or equivalent means.

(vi) Make monthly visual checks of bag tension on reverse air and shaker-type baghouses to ensure that bags are not kinked (kneed or bent) or laying on their sides. You do not have to make this check for shaker-type baghouses using self-tensioning (spring-loaded) devices.

(vii) Confirm the physical integrity of the baghouse through quarterly visual inspections of the baghouse interior for air leaks.

(viii) Inspect fans for wear, material buildup, and corrosion through quarterly visual inspections, vibration detectors, or equivalent means.

(c) *Venturi wet scrubbers.* For each venturi wet scrubber subject to the operating limits for pressure drop and scrubber water flow rate in § 63.1444(g) or § 63.1446(d), you must at all times monitor the hourly average pressure drop and water flow rate using a CPMS. You must install, operate, and maintain each CPMS according to the requirements in paragraphs (c)(1) and (2) of this section.

(1) For the pressure drop CPMS, you must meet the requirements in paragraphs (c)(1)(i) through (vi) of this section.

(i) Locate the pressure sensor(s) in or as close to a position that provides a representative measurement of the

sfrattini on LAPJZKW1R2 with $$_JOB
VerDate Sep<11>2014 09:16 Apr 04, 2023 Jkt 256165 PO 00000 Frm 00052 Fmt 8010 Sfmt 8010 Q:\40\256165.XXX PC31

pressure and that minimizes or eliminates pulsating pressure, vibration, and internal and external corrosion.

(ii) Use a gauge with a minimum measurement sensitivity of 0.5 inch of water or a transducer with a minimum measurement sensitivity of 1 percent of the pressure range.

(iii) Check the pressure tap for pluggage daily.

(iv) Using a manometer, check gauge calibration quarterly and transducer calibration monthly.

(v) Conduct calibration checks any time the sensor exceeds the manufacturer's specified maximum operating pressure range, or install a new pressure sensor.

(vi) At least monthly, inspect all components for integrity, all electrical connections for continuity, and all mechanical connections for leakage.

(2) For the scrubber water flow rate CPMS, you must meet the requirements in paragraphs (c)(2)(i) through (iv) of this section.

(i) Locate the flow sensor and other necessary equipment in a position that provides a representative flow and that reduces swirling flow or abnormal velocity distributions due to upstream and downstream disturbances.

(ii) Use a flow sensor with a minimum measurement sensitivity of 2 percent of the flow rate.

(iii) Conduct a flow sensor calibration check at least semiannually according to the manufacturer's instructions.

(iv) At least monthly, inspect all components for integrity, all electrical connections for continuity, and all mechanical connections for leakage.

(d) *Other control devices.* For each control device other than a baghouse or venturi wet scrubber subject to the operating limits for appropriate parameters in §63.1444(h) or §63.1446(e), you must at all times monitor each of your selected parameters using an appropriate CPMS. You must install, operate, and maintain each CPMS according to the equipment manufacturer's specifications and the requirements in paragraphs (d)(1) though (5) of this section.

(1) Locate the sensor(s) used for monitoring in or as close to a position that provides a representative measurement of the parameter being monitored.

(2) Determine the hourly average of all recorded readings.

(3) Conduct calibration and validation checks any time the sensor exceeds the manufacturer's specifications or you install a new sensor.

(4) At least monthly, inspect all components for integrity, all electrical connections for continuity, and all mechanical connections for leakage.

(5) Record the results of each inspection, calibration, and validation check.

(e) Except for monitoring malfunctions, associated repairs, and required quality assurance or control activities (including as applicable, calibration checks and required zero and span adjustments), you must monitor continuously (or collect data at all required intervals) at all times an affected source is operating.

(f) You may not use data recorded during monitoring malfunctions, associated repairs, and required quality assurance or control activities in data averages and calculations used to report emission or operating levels or to fulfill a minimum data availability requirement, if applicable. You must use all the data collected during all other periods in assessing compliance.

(g) A monitoring malfunction is any sudden, infrequent, not reasonably preventable failure of the monitor to provide valid data. Monitoring failures that are caused in part by poor maintenance or careless operation are not malfunctions.

[67 FR 40491, June 12, 2002, as amended at 70 FR 40673, July 14, 2005]

§63.1453 How do I demonstrate continuous compliance with the emission limitations, work practice standards, and operation and maintenance requirements that apply to me?

(a) *Particulate matter emission limits.* For each affected source subject to a particulate matter emission limit §63.1444 or §63.1446 as applies to you, you must demonstrate continuous compliance according to the requirements in paragraphs (a)(1) and (2) of this section.

(1) For each copper concentrate dryer, smelting furnace, slag cleaning

sfrattini on LAPJZKW1R2 with $$_JOB
VerDate Sep<11>2014 09:16 Apr 04, 2023 Jkt 256165 PO 00000 Frm 00053 Fmt 8010 Sfmt 8010 Q:\40\256165.XXX PC31

vessel, and copper converter department subject to a total particulate matter emission limit in § 63.1444 or § 63.1446 as applies to you, you must demonstrate continuous compliance by meeting the conditions in paragraphs (a)(1)(i) and (ii) of this section.

(i) Maintain the average concentration of total particulate matter in the gases discharged from the affected source at or below the applicable emission limit.

(ii) Conduct subsequent performance tests following your initial performance test no less frequently than once per year according to the performance test procedures in § 63.1450(a).

(2) For each smelting furnace, slag cleaning vessel, and copper converter department subject to the nonsulfuric acid particulate matter emission limit in § 63.1444 as applies to you, you must demonstrate continuous compliance by meeting the conditions in paragraphs (a)(2)(i) and (ii) of this section.

(i) Maintain the average concentration of nonsulfuric acid particulate matter in the process off-gas discharged from the affected source at or below 6.2 mg/dscm.

(ii) Conduct subsequent performance tests following your initial performance test no less frequently than once per year according to the performance test procedures in § 63.1450(b).

(b) *Copper converter department capture systems.* You must demonstrate continuous compliance of the copper converter department capture system by meeting the requirements in paragraphs (b)(1) through (4) of this section.

(1) Operate the copper converter department capture system at all times during blowing at or above the lowest values or settings established for the operating limits and demonstrated to achieve the opacity limit according to the applicable requirements of this subpart;

(2) Inspect and maintain the copper converter department capture system according to the applicable requirements in § 63.1447 and recording all information needed to document conformance with these requirements;

(3) Monitor the copper converter department capture system according to the requirements in § 63.1452(a) and collecting, reducing, and recording the monitoring data for each of the operating limit parameters according to the applicable requirements of this subpart; and

(4) Conduct subsequent performance tests according to the requirements of § 63.1450(c) following your initial performance test no less frequently than once per year to demonstrate that the opacity of any visible emissions exiting the roof monitors or roof exhaust fans on the building housing the copper converter department does not exceed 4 percent opacity.

(c) *Baghouses.* For each baghouse subject to the operating limit for the bag leak detection system alarm in § 63.1444(f) or § 63.1446(c), you must demonstrate continuous compliance by meeting the requirements in paragraphs (c)(1) through (3) of this section.

(1) Maintain the baghouse such that the bag leak detection system alarm does not sound for more than 5 percent of the operating time during any semiannual reporting period. To determine the percent of time the alarm sounded use the procedures in paragraphs (c)(1)(i) through (v) of this section.

(i) Alarms that occur due solely to a malfunction of the bag leak detection system are not included in the calculation.

(ii) Alarms that occur during startup, shutdown, or malfunction are not included in the calculation if the condition is described in the startup, shutdown, and malfunction plan, and you operated the source during such periods in accordance with § 63.6(e)(1).

(iii) Count 1 hour of alarm time for each alarm when you initiated procedures to determine the cause of the alarm within 1 hour.

(iv) Count the actual amount of time you took to initiate procedures to determine the cause of the alarm if you did not initiate procedures to determine the cause of the alarm within 1 hour of the alarm.

(v) Calculate the percentage of time the alarm on the bag leak detection system sounds as the ratio of the sum of alarm times to the total operating time multiplied by 100.

(2) Maintain records of the times the bag leak detection system alarm sounded, and for each valid alarm, the time you initiated corrective action,

sfrattini on LAPJZKW1R2 with $$_JOB
VerDate Sep<11>2014 09:16 Apr 04, 2023 Jkt 256165 PO 00000 Frm 00054 Fmt 8010 Sfmt 8010 Q:\40\256165.XXX PC31

the corrective action(s) taken, and the date on which corrective action was completed.

(3) Inspect and maintain each baghouse according to the requirements in §63.1451(b)(2) and recording all information needed to document conformance with these requirements. If you increase or decrease the sensitivity of the bag leak detection system beyond the limits specified in §63.1451(b)(1)(vi), you must include a copy of the required written certification by a responsible official in the next semiannual compliance report.

(d) *Venturi wet scrubbers.* For each venturi wet scrubber subject to the operating limits for pressure drop and scrubber water flow rate in §63.1444(g) or §63.1446(d), you must demonstrate continuous compliance by meeting the requirements of paragraphs (d)(1) through (3) of this section.

(1) Maintain the hourly average pressure drop and scrubber water flow rate at levels no lower than those established during the initial or subsequent performance test;

(2) Inspect and maintain each venturi wet scrubber CPMS according to §63.1452(c) and recording all information needed to document conformance with these requirements; and

(3) Collect and reduce monitoring data for pressure drop and scrubber water flow rate according to §63.1452(e) and recording all information needed to document conformance with these requirements.

(e) *Other control devices.* For each control device other than a baghouse or venturi wet scrubber subject to the operating limits for site-specific operating parameters in §63.1444(h) or §63.1446(e), you must demonstrate continuous compliance by meeting the requirements of paragraphs (e)(1) through (3) of this section:

(1) Maintain the hourly average rate at levels no lower than those established during the initial or subsequent performance test;

(2) Inspect and maintain each CPMS operated according to §63.1452(d) and record all information needed to document conformance with these requirements; and

(3) Collect and reduce monitoring data for selected parameters according to §63.1452(e) and recording all information needed to document conformance with these requirements.

(f) *Fugitive dust sources.* For each fugitive dust source subject to work practice standards in §63.1445, you must demonstrate continuous compliance by implementing all of fugitive control measures specified for the source in your written fugitive dust control plan.

[67 FR 40491, June 12, 2002, as amended at 70 FR 40674, July 14, 2005; 71 FR 20461, Apr. 20, 2006]

NOTIFICATIONS, REPORTS AND RECORDS

§63.1454 What notifications must I submit and when?

(a) You must submit all of the notifications in §§63.6(h)(4) and (h)(5), 63.7(b) and (c), 63.8(f)(4), and 63.9(b) through (h) that apply to you by the specified dates.

(b) As specified in §63.9(b)(2), if you start your affected source before June 12, 2002, you must submit your initial notification not later than October 10, 2002, or no later than 120 days after the source becomes subject to this subpart, whichever is later.

(c) As specified in §63.9(b)(3), if you start your new affected source on or after June 12, 2002, you must submit your initial notification not later than 120 calendar days after you become subject to this subpart.

(d) If you are required to conduct a performance test, you must submit a notification of intent to conduct a performance test at least 60 calendar days before the performance test is scheduled to begin as required in §63.7(b)(1).

(e) If you are required to conduct a performance test, opacity observation, or other initial compliance demonstration, you must submit a notification of compliance status according to §63.9(h)(2)(ii) by the date specified in paragraph (e)(1) or (2) of this section as applies to you.

(1) For each initial compliance demonstration that does not include a performance test, you must submit the notification of compliance status before the close of business on the 30th calendar day following the completion of the initial compliance demonstration.

sfrattini on LAPJZKW1R2 with $$_JOB
VerDate Sep<11>2014 09:16 Apr 04, 2023 Jkt 256165 PO 00000 Frm 00055 Fmt 8010 Sfmt 8010 Q:\40\256165.XXX PC31

(2) For each initial compliance demonstration that includes a performance test, you must submit the notification of compliance status, including the performance test results, before the close of business on the 60th calendar day following the completion of the performance test according to § 63.10(d)(2).

[67 FR 40491, June 12, 2002, as amended at 85 FR 73900, Nov. 19, 2020]

§ 63.1455 What reports must I submit and when?

(a) You must submit each report in paragraphs (a)(1) and (2) of this section that applies to you.

(1) You must submit a compliance report semiannually according to the requirements in paragraph (b) of this section and containing the information in paragraph (c) of this section.

(2) You must submit an immediate startup, shutdown, and malfunction report if you had a startup, shutdown, or malfunction during the reporting period that is not consistent with your startup, shutdown, and malfunction plan. You must report the actions taken for the event by fax or telephone within 2 working days after starting actions inconsistent with the plan. You must submit the information in § 63.10(d)(5)(ii) of this part by letter within 7 working days after the end of the event unless you have made alternative arrangements with the permitting authority.

(b) Unless the Administrator has approved a different schedule under § 63.10(a), you must submit each compliance report required in paragraph (a) of this section according to the applicable requirements in paragraphs (b)(1) through (5) of this section.

(1) The first compliance report must cover the period beginning on the compliance date that is specified for your affected source in § 63.1443 and ending on June 30 or December 31, whichever date comes first after the compliance date that is specified for your source in § 63.1443.

(2) The first compliance report must be postmarked or delivered no later than July 31 or January 31, whichever date comes first after your first compliance report is due.

(3) Each subsequent compliance report must cover the semiannual reporting period from January 1 through June 30 or the semiannual reporting period from July 1 through December 31.

(4) Each subsequent compliance report must be postmarked or delivered no later than July 31 or January 31, whichever date comes first after the end of the semiannual reporting period.

(5) For each affected source that is subject to permitting regulations pursuant to 40 CFR part 70 or 40 CFR part 71, and if the permitting authority has established dates for submitting semiannual reports pursuant to 40 CFR 70.6(a)(3)(iii)(A) or 40 CFR 71.6(a)(3)(iii)(A) of this chapter, you may submit the first and subsequent compliance reports according to the dates the permitting authority has established instead of according to the dates in paragraphs (b)(1) through (4) of this section.

(c) Each compliance report must contain the information in paragraphs (c)(1) through (3) of this section and, as applicable, paragraphs (c)(4) through (8) of this section.

(1) Company name and address.

(2) Statement by a responsible official, as defined in 40 CFR 63.2, with that official's name, title, and signature, certifying the accuracy and completeness of the content of the report.

(3) Date of report and beginning and ending dates of the reporting period.

(4) If you had a startup, shutdown or malfunction during the reporting period and you took actions consistent with your startup, shutdown, and malfunction plan, the compliance report must include the information in § 63.10(d)(5)(i).

(5) If there are no deviations from any emission limitations (emission limit, operating limit, opacity limit) that applies to you and there are no deviations from the requirements for work practice standards in this subpart, a statement that there were no deviations from the emission limitations, work practice standards, or operation and maintenance requirements during the reporting period.

(6) If there were no periods during which an operating parameter monitoring system was out-of-control as

sfrattini on LAPJZKW1R2 with $$_JOB
VerDate Sep<11>2014 09:16 Apr 04, 2023 Jkt 256165 PO 00000 Frm 00056 Fmt 8010 Sfmt 8010 Q:\40\256165.XXX PC31

specified in §63.8(c)(7), a statement that there were no periods during which the monitoring system was out-of-control during the reporting period.

(7) For each deviation from an emission limitation (emission limit, operating limit, opacity limit) and for each deviation from the requirements for work practice standards that occurs at an affected source where you are not using a continuous monitoring system to comply with the emission limitations or work practice standards in this subpart, the compliance report must contain the information in paragraphs (b)(1) through (4) of this section and the information in paragraphs (b)(7)(i) and (ii) of this section. This includes periods of startup, shutdown, and malfunction.

(i) The total operating time of each affected source during the reporting period.

(ii) Information on the number, duration, and cause of deviations (including unknown cause, if applicable), as applicable, and the corrective action taken.

(8) For each deviation from an emission limitation (emission limit, operating limit, opacity limit, and visible emission limit) occurring at an affected source where you are using an operating parameter monitoring system to comply with the emission limitation in this subpart, you must include the information in paragraphs (b)(1) through (4) of this section and the information in paragraphs (c)(8)(i) through (xi) of this section. This includes periods of startup, shutdown, and malfunction.

(i) The date and time that each malfunction started and stopped.

(ii) The date and time that each monitoring system was inoperative, except for zero (low-level) and high-level checks.

(iii) The date, time and duration that each monitoring system was out-of-control, including the information in §63.8(c)(8).

(iv) The date and time that each deviation started and stopped, and whether each deviation occurred during a period of startup, shutdown, or malfunction or during another period.

(v) A summary of the total duration of the deviation during the reporting period and the total duration as a percent of the total source operating time during that reporting period.

(vi) A breakdown of the total duration of the deviations during the reporting period into those that are due to startup, shutdown, control equipment problems, process problems, other known causes, and other unknown causes.

(vii) A summary of the total duration of monitoring system downtime during the reporting period and the total duration of monitoring system downtime as a percent of the total source operating time during that reporting period.

(viii) A brief description of the process units.

(ix) A brief description of the monitoring system.

(x) The date of the latest monitoring system certification or audit.

(xi) A description of any changes in continuous monitoring systems, processes, or controls since the last reporting period.

(d) If you have obtained a Title V operating permit pursuant to 40 CFR part 70 or 40 CFR part 71 must report all deviations as defined in this subpart in the semiannual monitoring report required by 40 CFR 70.6(a)(3)(iii)(A) or 40 CFR 71.6(a)(3)(iii)(A). If you submit a compliance report pursuant to paragraph (a) of this section along with, or as part of, the semiannual monitoring report required by 40 CFR 70.6(a)(3)(iii)(A) or 40 CFR 71.6(a)(3)(iii)(A), and the compliance report includes all required information concerning deviations from any emission limitation(including any operating limit), or work practice requirement in this subpart, submission of the compliance report is deemed to satisfy any obligation to report the same deviations in the semiannual monitoring report. However, submission of a compliance report does not otherwise affect any obligation you may have to report deviations from permit requirements to the permit authority.

§63.1456 What records must I keep and how long must I keep my records?

(a) You must keep the records listed in paragraphs (a)(1) through (7) of this section.

sfrattini on LAPJZKW1R2 with $$_JOB
VerDate Sep<11>2014 09:16 Apr 04, 2023 Jkt 256165 PO 00000 Frm 00057 Fmt 8010 Sfmt 8010 Q:\40\256165.XXX PC31

(1) A copy of each notification and report that you submitted to comply with this subpart, including all documentation supporting any initial notification or notification of compliance status that you submitted, according to the requirements in § 63.10(b)(2)(xiv).

(2) The records in § 63.6(e)(3)(iii) through (v) related to startup, shutdown, and malfunction.

(3) Records of performance tests and performance evaluations as required in § 63.10(b)(2)(viii).

(4) For each monitoring system, you must keep the records specified in paragraphs (a)(4)(i) through (iv) of this section.

(i) Records described in § 63.10(b)(2)(vi) through (xi).

(ii) Monitoring data recorded by the monitoring system during a performance evaluation as required in § 63.6(h)(7)(i) and (ii).

(iii) Previous (i.e., superseded) versions of the performance evaluation plan as required in § 63.8(d)(3).

(iv) Records of the date and time that each deviation started and stopped, and whether the deviation occurred during a period of startup, shutdown, or malfunction or during another period.

(5) For each performance test you conduct to demonstrate compliance with an opacity limit according to § 63.1450(c), you must keep the records specified in paragraphs (a)(5)(i) through (ix) of this section.

(i) Dates and time intervals of all opacity observation period segments;

(ii) Description of overall smelter operating conditions during each observation period. Identify, if any, the smelter copper production process equipment that was out-of-service during the performance test and explain why this equipment was not in operation;

(iii) Name, affiliation, and copy of current visible emission reading certification for each visible emission observer participating in the performance test;

(iv) Name, title, and affiliation for each indoor process monitor participating in the performance test;

(v) Copies of all visible emission observer opacity field data sheets;

(vi) Copies of all indoor process monitor operating log sheets;

(vii) Copies of all data summary sheets used for data reduction;

(viii) Copy of calculation sheets of the average opacity value used to demonstrate compliance with the opacity limit; and

(ix) Documentation according to the requirements in § 63.1450(c)(9)(iv) to support your selection of the site-specific capture system operating limits used for each batch copper converter capture system when blowing.

(6) For each baghouse subject to the operating limit in § 63.1444(f) or § 63.1446(c), you must keep the records specified in paragraphs (a)(6)(i) and (ii) of this section.

(i) Records of alarms for each bag leak detection system.

(ii) Description of the corrective actions taken following each bag leak detection alarm.

(7) For each control device other than a baghouse or venturi wet scrubber subject to site-specific operating limits in § 63.1444(g) or § 63.1446(f), you must keep documentation according to the requirements in § 63.1450(a)(5)(iv) to support your selection of the site-specific operating limits for the control device.

(b) Your records must be in a form suitable and readily available for expeditious review, according to § 63.10(b)(1).

(c) As specified in § 63.10(b)(1), you must keep each record for 5 years following the date of each occurrence, measurement, maintenance, corrective action, report, or record.

(d) You must keep each record on site for at least 2 years after the date of each occurrence, measurement, maintenance, corrective action, report, or record, according to § 63.10(b)(1). You can keep the records off site for the remaining 3 years.

OTHER REQUIREMENTS AND INFORMATION

§ 63.1457 What part of the general provisions apply to me?

Table 2 to this subpart shows which parts of the general provisions in §§ 63.1 through 63.15 apply to you.

§ 63.1458 Who implements and enforces this subpart?

(a) This subpart can be implemented and enforced by us, the United States

sfrattini on LAPJZKW1R2 with $$_JOB
VerDate Sep<11>2014 09:16 Apr 04, 2023 Jkt 256165 PO 00000 Frm 00058 Fmt 8010 Sfmt 8010 Q:\40\256165.XXX PC31

Environmental Protection Agency (U.S. EPA), or a delegated authority such as your State, local, or tribal agency. If the U.S. EPA Administrator has delegated authority to your State, local, or tribal agency, then that agency has the authority to implement and enforce this subpart. You should contact your U.S. EPA Regional Office to find out if this subpart is delegated to your State, local, or tribal agency.

(b) In delegating implementation and enforcement authority of this subpart to a State, local, or tribal agency under 40 CFR part 63, subpart E, the authorities listed in paragraph (c) of this section are retained by the U.S. EPA Administrator and are not transferred to the State, local, or tribal agency.

(c) The authorities that will not be delegated to State, local, or tribal agencies are as listed in paragraphs (c)(1) through (4) of this section.

(1) Approval of alternatives to the emission limitations and work practice standards in §§63.1444 through 63.1446 under §63.6(g).

(2) Approval of major alternatives to test methods under §63.7(f) and as defined in §63.90.

(3) Approval of major alternatives to monitoring under §63.8(f) and as defined in §63.90.

(4) Approval of major alternatives to recordkeeping and reporting under §63.10(f) and as defined in §63.90.

§63.1459 What definitions apply to this subpart?

Terms used in this subpart are defined in the Clean Air Act, in §63.2, and in this section as follows:

Bag leak detection system means a system that is capable of continuously monitoring relative particulate matter (dust) loadings in the exhaust of a baghouse in order to detect bag leaks and other upset conditions. A bag leak detection system includes, but is not limited to, an instrument that operates on triboelectric, light scattering, transmittance or other effect to continuously monitor relative particulate matter loadings.

Baghouse means a control device that collects particulate matter by filtering the gas stream through bags. A baghouse is also referred to as a ''fabric filter.''

Batch copper converter means a Pierce-Smith converter or Hoboken converter in which copper matte is oxidized to form blister copper by a process that is performed in discrete batches using a sequence of charging, blowing, skimming, and pouring.

Blowing means the operating mode for a batch copper converter during which air or oxygen-enriched air is injected into the molten converter bath.

Capture system means the collection of components used to capture gases and fumes released from one or more emission points, and to convey the captured gases and fumes to a control device. A capture system may include, but is not limited to, the following components as applicable to a given capture system design: duct intake devices, hoods, enclosures, ductwork, dampers, manifolds, plenums, and fans.

Charging means the operating mode for a batch copper converter during which molten or solid material is added into the vessel.

Control device means the air pollution control equipment used to collect particulate matter emissions. Examples of such equipment include, but are not limited to, a baghouse, an electrostatic precipitator, and a wet scrubber.

Copper concentrate dryer means a vessel in which copper concentrates are heated in the presence of air to reduce the moisture content of the material. Supplemental copper-bearing feed materials and fluxes may be added or mixed with the copper concentrates fed to a copper concentrate dryer.

Copper converter department means the area at a primary copper smelter in which the copper converters are located.

Copper matte means a material predominately composed of copper and iron sulfides produced by smelting copper ore concentrates.

Deviation means any instance in which an affected source subject to this subpart or an owner or operator of such a source fails to meet any of the following:

(1) Any requirement or obligation established by this subpart including, but not limited to, any emission limitation

sfrattini on LAPJZKW1R2 with $$_JOB
VerDate Sep<11>2014 09:16 Apr 04, 2023 Jkt 256165 PO 00000 Frm 00059 Fmt 8010 Sfmt 8010 Q:\40\256165.XXX PC31

(including any operating limit) or work practice standard;

(2) Any term or condition that is adopted to implement an applicable requirement in this subpart and that is included in the operating permit for any affected source required to obtain such a permit; or

(3) Any emission limitation (including any operating limit) or work practice standard in this subpart during startup, shutdown, or malfunction, regardless whether or not such failure is permitted by this subpart.

Emission limitation means any emission limit, opacity limit, operating limit, or visible emission limit.

Fugitive dust material means copper concentrate, dross, reverts, slag, speiss, or other solid copper-bearing materials.

Fugitive dust source means a stationary source of particulate matter emissions resulting from the handling, storage, transfer, or other management of fugitive dust materials where the source is not associated with a specific process, process vent, or stack. Examples of a fugitive dust source include, but are not limited to, on-site roadways used by trucks transporting copper concentrate, unloading of materials from trucks or railcars, outdoor material storage piles, and transfer of material to hoppers and bins.

Holding means the operating mode for a batch copper converter during which the molten bath is maintained in the vessel but no blowing is performed nor is material added into or removed from the vessel.

Opacity means the degree to which emissions reduce the transmission of light.

Particulate matter means any finely divided solid or liquid material, other than uncombined water, as measured by the specific reference method.

Pouring means the operating mode for a batch copper converter during which molten copper is removed from the vessel.

Primary copper smelter means any installation or any intermediate process engaged in the production of copper from copper sulfide ore concentrates through the use of pyrometallurgical techniques.

Responsible official means responsible official as defined in 40 CFR 70.2.

Skimming means the batch copper converter operating mode during which molten slag is removed from the vessel.

Slag cleaning vessel means a vessel that receives molten copper-bearing material and the predominant use of the vessel is to separate this material into molten copper matte and slag layers.

Smelting furnace means a furnace, reactor, or other type of vessel in which copper ore concentrate and fluxes are melted to form a molten mass of material containing copper matte and slag. Other copper-bearing materials may also be charged to the smelting furnace.

Work practice standard means any design, equipment, work practice, or operational standard, or combination thereof, that is promulgated pursuant to section 112(h) of the Clean Air Act.

TABLE 1 TO SUBPART QQQ OF PART 63—APPLICABILITY OF GENERAL PROVISIONS TO SUBPART QQQ

As required in §63.1457, you must comply with the requirements of the NESHAP General Provisions (40 CFR part 63, subpart A) shown in the following table:

Citation	Subject	Applies to subpart QQQ	Explanation
§63.1	Applicability	Yes.	
§63.2	Definitions	Yes.	
§63.3	Units and Abbreviations	Yes.	
§63.4	Prohibited Activities	Yes.	
§63.5	Construction and Reconstruction	Yes.	
§63.6(a)-(g)	Compliance with Standards and Maintenance requirements.	Yes.	
§63.6(h)	Determining compliance with Opacity and VE standards.	No	Subpart QQQ specifies the requirements and test protocol used to determine compliance with the opacity limits.

sfrattini on LAPJZKW1R2 with $$_JOB
VerDate Sep<11>2014 09:16 Apr 04, 2023 Jkt 256165 PO 00000 Frm 00060 Fmt 8010 Sfmt 8002 Q:\40\256165.XXX PC31

Citation	Subject	Applies to subpart QQQ	Explanation
§ 63.6(i)-(j)	Extension of Compliance and Presidential Compliance Exemption.	Yes.	
§ 63.7(a)(1)-(2)	Applicability and Performance Test Dates.	No	Subpart QQQ specifies performance test applicability and dates.
§ 63.7(a)(3), (b)-(h)	Performance Testing Requirements.	Yes.	
§ 63.8 except for (a)(4),(c)(4), and (f)(6).	Monitoring Requirements	Yes.	
§ 63.8(a)(4)	Additional Monitoring Requirements for Control devices in § 63.11.	No	Subpart QQ does not require flares.
§ 63.8(c)(4)	Continuous Monitoring System Requirements.	No	Subpart QQQ specifies requirements for operation of CMS.
§ 63.8(f)(6)	RATA Alternative	No	Subpart QQQ does not require continuous emission monitoring systems.
§ 63.9	Notification Requirements	Yes.	
§ 63.9(g)(5)	DATA reduction	No	Subpart QQQ specifies data reduction requirements
§ 63.10 except for (b)(2)(xiii) and (c)(7)-(8).	Recordkeeping and reporting Requirements.	Yes.	
§ 63.10(b)(2)(xiii)	CMS Records for RATA Alternative.	No	Subpart QQQ does not require continuous emission monitoring systems.
§ 63.10(c)(7)-(8)	Records of Excess Emissions and Parameter Monitoring Accedences for CMS.	No	Subpart QQQ specifies record keeping requirements
§ 63.11	Control Device Requirements	No	Subpart QQQ does not require flares
§ 63.12	State Authority and Delegations	Yes.	
§§ 63.13–63.15	Addresses, Incorporation by Reference, Availability of Information.	Yes.	

FIGURE 1 TO SUBPART QQQ OF PART 63—DATA SUMMARY SHEET FOR DETERMINATION OF AVERAGE OPACITY

Clock time	Number of converters blowing	Converter aisle activity	Average opacity for 1-minute interval (percent)	Visible emissions interference observed during 1-minute interval? (yes or no)	Average opacity for 1-minute interval blowing without visible emission interferences (percent)

sfrattini on LAPJZKW1R2 with $$_JOB
VerDate Sep<11>2014 09:16 Apr 04, 2023 Jkt 256165 PO 00000 Frm 00061 Fmt 8010 Sfmt 8002 Q:\40\256165.XXX PC31

Subpart RRR—National Emission Standards for Hazardous Air Pollutants for Secondary Aluminum Production

SOURCE: 65 FR 15710, Mar. 23, 2000, unless otherwise noted.

GENERAL

§ 63.1500 Applicability.

(a) The requirements of this subpart apply to the owner or operator of each secondary aluminum production facility as defined in § 63.1503.

(b) The requirements of this subpart apply to the following affected sources, located at a secondary aluminum production facility that is a major source of hazardous air pollutants (HAPs) as defined in § 63.2:

(1) Each new and existing aluminum scrap shredder;

(2) Each new and existing thermal chip dryer;

(3) Each new and existing scrap dryer/delacquering kiln/decoating kiln;

(4) Each new and existing group 2 furnace;

(5) Each new and existing sweat furnace;

(6) Each new and existing dross-only furnace;

(7) Each new and existing rotary dross cooler; and

(8) Each new and existing secondary aluminum processing unit.

(c) The requirements of this subpart pertaining to dioxin and furan (D/F) emissions and associated operating, monitoring, reporting and recordkeeping requirements apply to the following affected sources, located at a secondary aluminum production facility that is an area source of HAPs as defined in § 63.2:

(1) Each new and existing thermal chip dryer;

(2) Each new and existing scrap dryer/delacquering kiln/decoating kiln;

(3) Each new and existing sweat furnace;

(4) Each new and existing secondary aluminum processing unit, containing one or more group 1 furnace emission units processing other than clean charge.

(d) The requirements of this subpart do not apply to facilities and equipment used for research and development that are not used to produce a saleable product.

(e) If you are an owner or operator of an area source subject to this subpart, you are exempt from the obligation to obtain a permit under 40 CFR part 70 or 71, provided you are not required to obtain a permit under 40 CFR 70.3(a) or 71.3(a) for a reason other than your status as an area source under this subpart. Notwithstanding the previous sentence, you must continue to comply with the provisions of this subpart applicable to area sources.

(f) An aluminum die casting facility, aluminum foundry, or aluminum extrusion facility shall be considered to be an area source if it does not emit, or have the potential to emit considering controls, 10 tons per year or more of any single listed HAP or 25 tons per year of any combination of listed HAP from all emission sources which are located in a contiguous area and under common control, without regard to whether or not such sources are regulated under this subpart or any other subpart. In the case of an aluminum die casting facility, aluminum foundry, or aluminum extrusion facility which is an area source and is subject to regulation under this subpart only because it operates a thermal chip dryer, no furnace operated by such a facility shall be deemed to be subject to the requirements of this subpart if it melts only clean charge, internal scrap, or customer returns.

[65 FR 15710, Mar. 23, 2000, as amended at 67 FR 79814, Dec. 30, 2002; 70 FR 75346, Dec. 19, 2005]

§ 63.1501 Dates.

(a) An affected source constructed before February 11, 1999, must comply with the requirements of this subpart by March 24, 2003, except as provided in paragraphs (b) and (c).

(b) The owner or operator of an affected source constructed before February 14, 2012, must comply with the following requirements of this subpart by March 16, 2016: § 63.1505(k) introductory text, (k)(1) through (k)(5), other than the emission standards for HF in (k)(2); § 63.1506 (a)(1), (c)(1), (g)(5), (k)(3), (m)(4), (m)(7), (n)(1); § 63.1510 (b)(5), (b)(9), (d)(2), (d)(3),(f)(1)(ii), (i)(4), (j)(4),

sfrattini on LAPJZKW1R2 with $$_JOB
VerDate Sep<11>2014 09:16 Apr 04, 2023 Jkt 256165 PO 00000 Frm 00062 Fmt 8010 Sfmt 8010 Q:\40\256165.XXX PC31

(n)(1), (o)(1), (o)(1)(ii), (s)(2)(iv), (t) introductory text, (t)(2)(i), (t)(2)(ii), (t)(4), (t)(5); §63.1511(a) introductory text, (b) introductory text, (b)(1), (b)(3), (b)(6), (c)(9), (g)(5); §63.1512(e)(1), (e)(2), (e)(3), (h)(2), (j), (j)(1)(i), (j)(2)(i), (o) introductory text, (o)(1), (o)(3), (p)(2); §63.1513 (b)(1), (e)(1), (e)(2), (e)(3), (f); §63.1516 (b) introductory text, (b)(2)(vii), (b)(3)(i); §63.1517(b)(1)(iii), (b)(4)(ii), (b)(14), (b)(19).

(c) The owner or operator of an affected source constructed before February 14, 2012, must comply with the following requirements of this subpart by September 18, 2017: §63.1505(i)(4) and (k)(2) emission standards for HF; §63.1512(e)(4) through (7) requirements for testing existing uncontrolled group 1 furnaces (that is, group 1 furnaces without add-on air pollution control devices); and §63.1514 requirements for change of furnace classification.

(d) An affected source that commenced construction or reconstruction after February 11, 1999 but before February 14, 2012 must comply with the requirements of this subpart by March 24, 2000 or upon startup, whichever is later, except as provided in paragraphs (b), (c), (e), and (f) of this section.

(e) The owner or operator of an affected source that commences construction or reconstruction after February 14, 2012, must comply with all the requirements of this subpart by September 18, 2015 or upon startup, whichever is later.

(f) The owner or operator of any affected source which is constructed or reconstructed after February 11, 1999, but before February 14, 2012 at any existing aluminum die casting facility, aluminum foundry, or aluminum extrusion facility which otherwise meets the applicability criteria set forth in §63.1500 must comply with the requirements of this subpart by March 24, 2003 or upon startup, whichever is later, except as provided in paragraphs (b) and (c) of this section. The owner or operator of any affected source which is constructed or reconstructed after February 14, 2012, at any existing aluminum die casting facility, aluminum foundry, or aluminum extrusion facility which otherwise meets the applicability criteria set forth in §63.1500 must comply with the requirements by September 18, 2015 or upon startup, whichever is later.

[80 FR 56738, Sept. 18, 2015]

§63.1502 [Reserved]

§63.1503 Definitions.

Terms used in this subpart are defined in the Clean Air Act as amended (CAA), in §63.2, or in this section as follows:

ACGIH Guidelines means chapters 3 and 5 of *Industrial Ventilation: A Manual of Recommended Practice* 23rd edition or appropriate chapters of *Industrial Ventilation: A Manual of Recommended Practice for Design* 27th edition (incorporated by reference, see §63.14).

Add-on air pollution control device means equipment installed on a process vent that reduces the quantity of a pollutant that is emitted to the air.

Afterburner means an air pollution control device that uses controlled flame combustion to convert combustible materials to noncombustible gases; also known as an incinerator or a thermal oxidizer.

Aluminum scrap means fragments of aluminum stock removed during manufacturing (*i.e.*, machining), manufactured aluminum articles or parts rejected or discarded and useful only as material for reprocessing, and waste and discarded material made of aluminum.

Aluminum scrap shredder means a high speed or low speed unit that crushes, grinds, granulates, shears or breaks aluminum scrap into a more uniform size prior to processing or charging to a *scrap dryer/delacquering kiln/decoating kiln*, or furnace. A *bale breaker* is not an *aluminum scrap shredder*. Shearing and cutting operations performed at rolling mills and aluminum finishing operations (such as slitters) are not aluminum scrap shredders.

Bag leak detection system means an instrument that is capable of monitoring particulate matter loadings in the exhaust of a fabric filter (*i.e.*, baghouse) in order to detect bag failures. A *bag leak detection system* includes, but is not limited to, an instrument that operates on triboelectric, light scattering, light transmittance, or other effect to monitor relative particulate matter loadings.

sfrattini on LAPJZKW1R2 with $$_JOB
VerDate Sep<11>2014 09:16 Apr 04, 2023 Jkt 256165 PO 00000 Frm 00063 Fmt 8010 Sfmt 8010 Q:\40\256165.XXX PC31

Bale breaker means a device used to break apart a bale of aluminum scrap for further processing. Bale breakers are not used to crush, grind, granulate, shear or break aluminum scrap into more uniform size pieces.

Capture and collection system means the system, including duct systems and fans, and, in some cases, hoods, used to collect a contaminant at or near its source, and for affected sources equipped with an air pollution control device, transport the contaminated air to the air cleaning device.

Chips means small, uniformly-sized, unpainted pieces of aluminum scrap, typically below 1¼ inches in any dimension, primarily generated by turning, milling, boring, and machining of aluminum parts.

Clean charge means furnace charge materials, including molten aluminum; T-bar; sow; ingot; billet; pig; alloying elements; aluminum scrap known by the owner or operator to be entirely free of paints, coatings, and lubricants; uncoated/unpainted aluminum chips that have been thermally dried or treated by a centrifugal cleaner; aluminum scrap dried at 343 °C (650 °F) or higher; aluminum scrap delacquered/decoated at 482 °C (900 °F) or higher; and runaround scrap. Anodized aluminum that contains dyes or sealants containing organic compounds is not clean charge.

Cover flux means salt added to the surface of molten aluminum in a *group 1* or *group 2 furnace*, without surface agitation of the molten aluminum, for the purpose of preventing oxidation. Any flux added to a rotary furnace is not a cover flux.

Customer returns means any aluminum product which is returned by a customer to the aluminum company that originally manufactured the product prior to resale of the product or further distribution in commerce, and which contains no paint or other solid coatings (*i.e.*, lacquers).

D/F means dioxins and furans.

Dioxins and furans means tetra-, penta-, hexa-, and octachlorinated dibenzo dioxins and furans.

Dross means the slags and skimmings from aluminum melting and refining operations consisting of fluxing agent(s), impurities, and/or oxidized and non-oxidized aluminum, from scrap aluminum charged into the furnace.

Dross-only furnace means a furnace, typically of rotary barrel design, dedicated to the reclamation of aluminum from dross formed during melting, holding, fluxing, or alloying operations carried out in other process units. Dross and salt flux are the sole feedstocks to this type of furnace.

Emission unit means a *group 1 furnace* or *in-line fluxer* at a *secondary aluminum production facility*.

Fabric filter means an add-on air pollution control device used to capture particulate matter by filtering gas streams through filter media; also known as a baghouse.

Feed/charge means, for a furnace or other process unit that operates in batch mode, the total weight of material (including molten aluminum, T-bar, sow, ingot, etc.) and alloying agents that enter the furnace during an operating cycle. For a furnace or other process unit that operates continuously, *feed/charge* means the weight of material (including molten aluminum, T-bar, sow, ingot, etc.) and alloying agents that enter the process unit within a specified time period (*e.g.*, a time period equal to the performance test period). The *feed/charge* for a dross only furnace includes the total weight of dross and solid flux.

Fluxing means refining of molten aluminum to improve product quality, achieve product specifications, or reduce material loss, including the addition of solvents to remove impurities (solvent flux); and the injection of gases such as chlorine, or chlorine mixtures, to remove magnesium (demagging) or hydrogen bubbles (degassing). *Fluxing* may be performed in the furnace or outside the furnace by an *in-line fluxer*.

Furnace hearth means the combustion zone of a furnace in which the molten metal is contained.

Group 1 furnace means a furnace of any design that melts, holds, or processes aluminum that contains paint, lubricants, coatings, or other foreign materials with or without *reactive fluxing*, or processes *clean charge* with *reactive fluxing*.

sfrattini on LAPJZKW1R2 with $$_JOB
VerDate Sep<11>2014 09:16 Apr 04, 2023 Jkt 256165 PO 00000 Frm 00064 Fmt 8010 Sfmt 8010 Q:\40\256165.XXX PC31

Group 2 furnace means a furnace of any design that melts, holds, or processes only *clean charge* and that performs no *fluxing* or performs *fluxing* using only nonreactive, non-HAP-containing/non-HAP-generating gases or agents. Unheated pots, to which no flux is added and that are used to transport metal, are not furnaces.

HCl means hydrogen chloride.

HF means hydrogen fluoride.

In-line fluxer means a device exterior to a furnace, located in a transfer line from a furnace, used to refine (flux) molten aluminum; also known as a flux box, degassing box, or demagging box.

Internal scrap means all aluminum scrap regardless of the level of contamination which originates from castings or extrusions produced by an aluminum die casting facility, aluminum foundry, or aluminum extrusion facility, and which remains at all times within the control of the company that produced the castings or extrusions.

Lime means calcium oxide or other alkaline reagent.

Lime-injection means the continuous addition of lime upstream of a *fabric filter*.

Melting/holding furnace means a *group 1 furnace* that processes only *clean charge,* performs melting, holding, and fluxing functions, and does not transfer molten aluminum to or from another furnace except for purposes of alloy changes, off-specification product drains, or maintenance activities.

Operating cycle means for a batch process, the period beginning when the feed material is first charged to the operation and ending when all feed material charged to the operation has been processed. For a batch melting or holding furnace process, *operating cycle* means the period including the charging and melting of scrap aluminum and the fluxing, refining, alloying, and tapping of molten aluminum (the period from tap-to-tap).

PM means, for the purposes of this subpart, emissions of particulate matter that serve as a measure of total particulate emissions and as a surrogate for metal HAPs contained in the particulates, including but not limited to, antimony, arsenic, beryllium, cadmium, chromium, cobalt, lead, manganese, mercury, nickel, and selenium.

Pollution prevention means source reduction as defined under the Pollution Prevention Act of 1990 (*e.g.*, equipment or technology modifications, process or procedure modifications, reformulation or redesign of products, substitution of raw materials, and improvements in housekeeping, maintenance, training, or inventory control), and other practices that reduce or eliminate the creation of pollutants through increased efficiency in the use of raw materials, energy, water, or other resources, or protection of natural resources by conservation.

Reactive fluxing means the use of any gas, liquid, or solid flux (other than cover flux) that results in a HAP emission. Argon and nitrogen are not reactive and do not produce HAP.

Reconstruction means the replacement of components of an affected source or *emission unit* such that the fixed capital cost of the new components exceeds 50 percent of the fixed capital cost that would be required to construct a comparable new affected source, and it is technologically and economically feasible for the reconstructed source to meet relevant standard(s) established in this subpart. Replacement of the refractory in a furnace is routine maintenance and is not a *reconstruction*. The repair and replacement of *in-line fluxer* components (*e.g.*, rotors/shafts, burner tubes, refractory, warped steel) is considered to be routine maintenance and is not considered a *reconstruction*. *In-line fluxers* are typically removed to a maintenance/repair area and are replaced with repaired units. The replacement of an existing *in-line fluxer* with a repaired unit is not considered a *reconstruction*.

Residence time means, for an *afterburner*, the duration of time required for gases to pass through the *afterburner* combustion zone. *Residence time* is calculated by dividing the *afterburner* combustion zone volume in cubic feet by the volumetric flow rate of the gas stream in actual cubic feet per second. The combustion zone volume includes the reaction chamber of the afterburner in which the waste gas stream is exposed to the direct combustion flame and the complete refractory lined portion of the furnace stack up to the measurement thermocouple.

sfrattini on LAPJZKW1R2 with $$_JOB
VerDate Sep<11>2014 09:16 Apr 04, 2023 Jkt 256165 PO 00000 Frm 00065 Fmt 8010 Sfmt 8010 Q:\40\256165.XXX PC31

Rotary dross cooler means a water-cooled rotary barrel device that accelerates cooling of dross.

Round top furnace means a cylindrically-shaped reverberatory furnace that has a top that is removed for charging and other furnace operations.

Runaround scrap means scrap materials generated on-site by aluminum casting, extruding, rolling, scalping, forging, forming/stamping, cutting, and trimming operations and that do not contain paint or solid coatings. Uncoated/unpainted aluminum chips generated by turning, boring, milling, and similar machining operations may be clean charge if they have been thermally dried or treated by a centrifugal cleaner, but are not considered to be *runaround scrap*.

Scrap dryer/delacquering kiln/decoating kiln means a unit used primarily to remove various organic contaminants such as oil, paint, lacquer, ink, plastic, and/or rubber from *aluminum scrap* (including used beverage containers) prior to melting, or that separates aluminum foil from paper and plastic in scrap.

Secondary aluminum processing unit (SAPU). An existing SAPU means all existing group 1 furnaces and all existing in-line fluxers within a secondary aluminum production facility. Each existing group 1 furnace or existing in-line fluxer is considered an emission unit within a secondary aluminum processing unit. A new SAPU means any combination of individual group 1 furnaces and in-line fluxers within a secondary aluminum processing facility which either were constructed or reconstructed after February 11, 1999, or have been permanently redesignated as new emission units pursuant to § 63.1505(k)(6). Each of the group 1 furnaces or in-line fluxers within a new SAPU is considered an emission unit within that secondary aluminum processing unit. A secondary aluminum production facility may have more than one new SAPU.

Secondary aluminum production facility means any establishment using *clean charge*, *aluminum scrap*, or dross from aluminum production, as the raw material and performing one or more of the following processes: scrap shredding, scrap drying/delacquering/decoating, thermal chip drying, furnace operations (*i.e.*, melting, holding, sweating, refining, fluxing, or alloying), recovery of aluminum from dross, in-line fluxing, or dross cooling. A *secondary aluminum production facility* may be independent or part of a primary aluminum production facility. For purposes of this subpart, aluminum die casting facilities, aluminum foundries, and aluminum extrusion facilities are not considered to be secondary aluminum production facilities if the only materials they melt are *clean charge*, customer returns, or internal scrap, and if they do not operate sweat furnaces, thermal chip dryers, or scrap dryers/delacquering kilns/decoating kilns. The determination of whether a facility is a *secondary aluminum production facility* is only for purposes of this subpart and any regulatory requirements which are derived from the applicability of this subpart, and is separate from any determination which may be made under other environmental laws and regulations, including whether the same facility is a ''secondary metal production facility'' as that term is used in 42 U.S.C. § 7479(1) and 40 CFR 52.21(b)(1)(i)(A) (''prevention of significant deterioration of air quality'').

Shutdown means the period of operation for thermal chip dryers, scrap dryers/delacquering kilns, decoating kilns, dross-only furnaces, group 1 furnaces, in-line fluxers, sweat furnaces and group 2 furnaces that begins when the introduction of feed/charge is intentionally halted, the source of heat to the emissions unit is turned off, and product has been removed from the emission unit to the greatest extent practicable (*e.g.*, by tapping a furnace). Shutdown ends when the emission unit is near ambient temperature.

Sidewell means an open well adjacent to the hearth of a furnace with connecting arches between the hearth and the open well through which molten aluminum is circulated between the hearth, where heat is applied by burners, and the open well, which is used for charging scrap and solid flux or salt to the furnace, injecting fluxing agents, and skimming dross.

Startup means the period of operation for thermal chip dryers, scrap dryers/

sfrattini on LAPJZKW1R2 with $$_JOB
VerDate Sep<11>2014 09:16 Apr 04, 2023 Jkt 256165 PO 00000 Frm 00066 Fmt 8010 Sfmt 8010 Q:\40\256165.XXX PC31

delacquering kilns, decoating kilns, dross-only furnaces, group 1 furnaces, in-line fluxers, sweat furnaces and group 2 furnaces that begins with equipment warming from a shutdown, that is, the equipment is at or near ambient temperature. Startup ends at the point that flux or feed/charge is introduced.

Sweat furnace means a furnace used exclusively to reclaim aluminum from scrap that contains substantial quantities of iron by using heat to separate the low-melting point aluminum from the scrap while the higher melting-point iron remains in solid form.

Tap means the end of an operating cycle of any individual furnace when processed molten aluminum is poured from that furnace.

TEQ means the international method of expressing toxicity equivalents for dioxins and furans as defined in ''Interim Procedures for Estimating Risks Associated with Exposures to Mixtures of Chlorinated Dibenzo-p-Dioxins and -Dibenzofurans (CDDs and CDFs) and 1989 Update'' (EPA–625/3–89–016), available from the National Technical Information Service (NTIS), 5285 Port Royal Road, Springfield, Virginia 22161, NTIS no. PB 90–145756.

THC means, for the purposes of this subpart, total hydrocarbon emissions that also serve as a surrogate for the emissions of organic HAP compounds.

Thermal chip dryer means a device that uses heat to evaporate oil or oil/water mixtures from unpainted/uncoated aluminum chips. Pre-heating boxes or other dryers which are used solely to remove water from aluminum scrap are not considered to be thermal chip dryers for purposes of this subpart.

Three-day, 24-hour rolling average means daily calculations of the average 24-hour emission rate (lbs/ton of feed/charge), over the 3 most recent consecutive 24-hour periods, for a *secondary aluminum processing unit*.

Total reactive chlorine flux injection rate means the sum of the total weight of chlorine in the gaseous or liquid reactive flux and the total weight of chlorine in the solid reactive chloride flux, divided by the total weight of feed/charge, as determined by the procedure in § 63.1512(o).

Total reactive fluorine flux injection rate means the sum of the total weight of fluorine in the gaseous or liquid reactive flux added to an uncontrolled group 1 furnace, and the total weight of fluorine in the solid reactive flux added to an uncontrolled group 1 furnace, divided by the total weight of feed/charge, as determined by the procedure in § 63.1512(o).

[65 FR 15710, Mar. 23, 2000, as amended at 67 FR 79814, Dec. 30, 2002; 69 FR 18803, Apr. 9, 2004; 69 FR 53984, Sept. 3, 2004; 70 FR 57517, Oct. 3, 2005; 80 FR 56738, Sept. 18, 2015]

§ 63.1504 [Reserved]

EMISSION STANDARDS AND OPERATING REQUIREMENTS

§ 63.1505 Emission standards for affected sources and emission units.

(a) *Summary*. The owner or operator of a new or existing affected source must comply at all times with each applicable limit in this section, including periods of startup and shutdown. Table 1 to this subpart summarizes the emission standards for each type of source.

(b) *Aluminum scrap shredder*. On and after the compliance date established by § 63.1501, the owner or operator of an aluminum scrap shredder at a secondary aluminum production facility that is a major source must not discharge or cause to be discharged to the atmosphere:

(1) Emissions in excess of 0.023 grams (g) of PM per dry standard cubic meter (dscm) (0.010 grain (gr) of PM per dry standard cubic foot (dscf)); and

(2) Visible emissions (VE) in excess of 10 percent opacity from any PM add-on air pollution control device if a continuous opacity monitor (COM) or visible emissions monitoring is chosen as the monitoring option.

(c) *Thermal chip dryer*. On and after the compliance date established by § 63.1501, the owner or operator of a thermal chip dryer must not discharge or cause to be discharged to the atmosphere emissions in excess of:

(1) 0.40 kilogram (kg) of THC, as propane, per megagram (Mg) (0.80 lb of THC, as propane, per ton) of feed/charge from a thermal chip dryer at a secondary aluminum production facility that is a major source; and

sfrattini on LAPJZKW1R2 with $$_JOB
VerDate Sep<11>2014 09:16 Apr 04, 2023 Jkt 256165 PO 00000 Frm 00067 Fmt 8010 Sfmt 8010 Q:\40\256165.XXX PC31

(2) 2.50 micrograms (μg) of D/F TEQ per Mg (3.5×10^{-5} gr per ton) of feed/charge from a thermal chip dryer at a secondary aluminum production facility that is a major or area source.

(d) *Scrap dryer/delacquering kiln/decoating kiln*. On and after the compliance date established by § 63.1501:

(1) The owner or operator of a scrap dryer/delacquering kiln/decoating kiln must not discharge or cause to be discharged to the atmosphere emissions in excess of:

(i) 0.03 kg of THC, as propane, per Mg (0.06 lb of THC, as propane, per ton) of feed/charge from a scrap dryer/delacquering kiln/decoating kiln at a secondary aluminum production facility that is a major source;

(ii) 0.04 kg of PM per Mg (0.08 lb per ton) of feed/charge from a scrap dryer/delacquering kiln/decoating kiln at a secondary aluminum production facility that is a major source;

(iii) 0.25 μg of D/F TEQ per Mg (3.5×10^{-6} gr of D/F TEQ per ton) of feed/charge from a scrap dryer/delacquering kiln/decoating kiln at a secondary aluminum production facility that is a major or area source; and

(iv) 0.40 kg of HCl per Mg (0.80 lb per ton) of feed/charge from a scrap dryer/delacquering kiln/decoating kiln at a secondary aluminum production facility that is a major source.

(2) The owner or operator of a scrap dryer/delacquering kiln/decoating kiln at a secondary aluminum production facility that is a major source must not discharge or cause to be discharged to the atmosphere visible emissions in excess of 10 percent opacity from any PM add-on air pollution control device if a COM is chosen as the monitoring option.

(e) *Scrap dryer/delacquering kiln/decoating kiln: alternative limits*. The owner or operator of a scrap dryer/delacquering kiln/decoating kiln may choose to comply with the emission limits in this paragraph (e) as an alternative to the limits in paragraph (d) of this section if the scrap dryer/delacquering kiln/decoating kiln is equipped with an afterburner having a design residence time of at least 1 second and the afterburner is operated at a temperature of at least 760 °C (1400 °F) at all times. On and after the compliance date established by § 63.1501:

(1) The owner or operator of a scrap dryer/delacquering kiln/decoating kiln must not discharge or cause to be discharged to the atmosphere emissions in excess of:

(i) 0.10 kg of THC, as propane, per Mg (0.20 lb of THC, as propane, per ton) of feed/charge from a scrap dryer/delacquering kiln/decoating kiln at a secondary aluminum production facility that is a major source;

(ii) 0.15 kg of PM per Mg (0.30 lb per ton) of feed/charge from a scrap dryer/delacquering kiln/decoating kiln at a secondary aluminum production facility that is a major source;

(iii) 5.0 μg of D/F TEQ per Mg (7.0×10^{-5} gr of D/F TEQ per ton) of feed/charge from a scrap dryer/delacquering kiln/decoating kiln at a secondary aluminum production facility that is a major or area source; and

(iv) 0.75 kg of HCl per Mg (1.50 lb per ton) of feed/charge from a scrap dryer/delacquering kiln/decoating kiln at a secondary aluminum production facility that is a major source.

(2) The owner or operator of a scrap dryer/ delacquering kiln/decoating kiln at a secondary aluminum production facility that is a major source must not discharge or cause to be discharged to the atmosphere visible emissions in excess of 10 percent opacity from any PM add-on air pollution control device if a COM is chosen as the monitoring option.

(f) *Sweat furnace*. The owner or operator of a sweat furnace shall comply with the emission standard of paragraph (f)(2) of this section.

(1) The owner or operator is not required to conduct a performance test to demonstrate compliance with the emission standard of paragraph (f)(2) of this section, provided that, on and after the compliance date of this rule, the owner or operator operates and maintains an afterburner with a design residence time of 0.8 seconds or greater and an operating temperature of 1600 °F or greater.

(2) On and after the compliance date established by § 63.1501, the owner or operator of a sweat furnace at a secondary aluminum production facility that is a major or area source must not

sfrattini on LAPJZKW1R2 with $$_JOB
VerDate Sep<11>2014 09:16 Apr 04, 2023 Jkt 256165 PO 00000 Frm 00068 Fmt 8010 Sfmt 8010 Q:\40\256165.XXX PC31

discharge or cause to be discharged to the atmosphere emissions in excess of 0.80 nanogram (ng) of D/F TEQ per dscm (3.5×10^{-10} gr per dscf) at 11 percent oxygen (O^2).

(g) *Dross-only furnace*. On and after the compliance date established by § 63.1501, the owner or operator of a dross-only furnace at a secondary aluminum production facility that is a major source must not discharge or cause to be discharged to the atmosphere:

(1) Emissions in excess of 0.15 kg of PM per Mg (0.30 lb of PM per ton) of feed/charge.

(2) Visible emissions in excess of 10 percent opacity from any PM add-on air pollution control device if a COM is chosen as the monitoring option.

(h) *Rotary dross cooler*. On and after the compliance date established by § 63.1501, the owner or operator of a rotary dross cooler at a secondary aluminum production facility that is a major source must not discharge or cause to be discharged to the atmosphere:

(1) Emissions in excess of 0.09 g of PM per dscm (0.04 gr per dscf).

(2) Visible emissions in excess of 10 percent opacity from any PM add-on air pollution control device if a COM is chosen as the monitoring option.

(i) *Group 1 furnace*. The owner or operator of a group 1 furnace must use the limits in this paragraph to determine the emission standards for a SAPU.

(1) 0.20 kg of PM per Mg (0.40 lb of PM per ton) of feed/charge from a group 1 furnace, that is not a melting/holding furnace processing only clean charge, at a secondary aluminum production facility that is a major source;

(2) 0.40 kg of PM per Mg (0.80 lb of PM per ton) of feed/charge from a group 1 melting/holding furnace processing only clean charge at a secondary aluminum production facility that is a major source;

(3) 15 μg of D/F TEQ per Mg (2.1×10^{-4} gr of D/F TEQ per ton) of feed/charge from a group 1 furnace at a secondary aluminum production facility that is a major or area source. This limit does not apply if the furnace processes only clean charge; and

(4) 0.20 kg of HF per Mg (0.40 lb of HF per ton) of feed/charge from an uncontrolled group 1 furnace and 0.20 kg of HCl per Mg (0.40 lb of HCl per ton) of feed/charge or, if the furnace is equipped with an add-on air pollution control device, 10 percent of the uncontrolled HCl emissions, by weight, for a group 1 furnace at a secondary aluminum production facility that is a major source.

(5) The owner or operator of a group 1 furnace at a secondary aluminum production facility that is a major source must not discharge or cause to be discharged to the atmosphere visible emissions in excess of 10 percent opacity from any PM add-on air pollution control device if a COM is chosen as the monitoring option.

(6) The owner or operator may determine the emission standards for a SAPU by applying the group 1 furnace limits on the basis of the aluminum production weight in each group 1 furnace, rather than on the basis of feed/charge.

(7) The owner or operator of a sidewell group 1 furnace that conducts reactive fluxing (except for cover flux) in the hearth, or that conducts reactive fluxing in the sidewell at times when the level of molten metal falls below the top of the passage between the sidewell and the hearth, must comply with the emission limits of paragraphs (i)(1) through (4) of this section on the basis of the combined emissions from the sidewell and the hearth.

(j) *In-line fluxer*. Except as provided in paragraph (j)(3) of this section for an in-line fluxer using no reactive flux material, the owner or operator of an in-line fluxer must use the limits in this paragraph to determine the emission standards for a SAPU.

(1) 0.02 kg of HCl per Mg (0.04 lb of HCl per ton) of feed/charge;

(2) 0.005 kg of PM per Mg (0.01 lb of PM per ton) of feed/charge.

(3) The emission limits in paragraphs (j)(1) and (j)(2) of this section do not apply to an in-line fluxer that uses no reactive flux materials.

(4) The owner or operator of an in-line fluxer at a secondary aluminum production facility that is a major source must not discharge or cause to be discharged to the atmosphere visible

sfrattini on LAPJZKW1R2 with $$_JOB
VerDate Sep<11>2014 09:16 Apr 04, 2023 Jkt 256165 PO 00000 Frm 00069 Fmt 8010 Sfmt 8010 Q:\40\256165.XXX PC31

emissions in excess of 10 percent opacity from any PM add-on air pollution control device used to control emissions from the in-line fluxer, if a COM is chosen as the monitoring option.

(5) The owner or operator may determine the emission standards for a SAPU by applying the in-line fluxer limits on the basis of the aluminum production weight in each in-line fluxer, rather than on the basis of feed/charge.

(k) *Secondary aluminum processing unit*. The owner or operator must comply with the emission limits calculated using the equations for PM, HCl and HF in paragraphs (k)(1) and (2) of this section for each secondary aluminum processing unit at a secondary aluminum production facility that is a major source. The owner or operator must comply with the emission limit calculated using the equation for D/F in paragraph (k)(3) of this section for each secondary aluminum processing unit at a secondary aluminum production facility that is a major or area source.

(1) The owner or operator must not discharge or allow to be discharged to the atmosphere any 3-day, 24-hour rolling average emissions of PM in excess of:

$$L_{c_{PM}} = \frac{\sum_{i=1}^{n}\left(L_{ti_{PM}} \times T_{ti}\right)}{\sum_{i=1}^{n}\left(T_{ti}\right)} \qquad \text{(Eq. 1)}$$

Where:

L_{tiPM} = The PM emission limit for individual emission unit i in paragraph (i)(1) and (2) of this section for a group 1 furnace or in paragraph (j)(2) of this section for an in-line fluxer;

T_{ti} = The mass of feed/charge for 24 hours for individual emission unit i; and

L_{cPM} = The daily PM emission limit for the secondary aluminum processing unit which is used to calculate the 3-day, 24-hour PM emission limit applicable to the SAPU.

NOTE: In-line fluxers using no reactive flux materials cannot be included in this calculation since they are not subject to the PM limit.

(2) The owner or operator must not discharge or allow to be discharged to the atmosphere any 3-day, 24-hour rolling average emissions of HCl or HF in excess of:

$$L_{c_{HCl/HF}} = \frac{\sum_{i=1}^{n}\left(L_{ti_{HCl/HF}} \times T_{ti}\right)}{\sum_{i=1}^{n}\left(T_{ti}\right)} \qquad \text{(Eq. 2)}$$

Where:

$L_{tiHCl/HF}$ = The HCl emission limit for individual emission unit i in paragraph (i)(4) of this section for a group 1 furnace or in paragraph (j)(1) of this section for an in-line fluxer; or the HF emission limit for individual emission unit i in paragraph (i)(4) of this section for an uncontrolled group 1 furnace; and

$L_{cHCl/HF}$ = The daily HCl or HF emission limit for the secondary aluminum processing unit which is used to calculate the 3-day, 24-hour HCl or HF emission limit applicable to the SAPU.

NOTE: Only uncontrolled group 1 furnaces are included in this HF limit calculation. In-line fluxers using no reactive flux materials

sfrattini on LAPJZKW1R2 with $$_JOB
VerDate Sep<11>2014 09:16 Apr 04, 2023 Jkt 256165 PO 00000 Frm 00070 Fmt 8010 Sfmt 8010 Q:\40\256165.XXX PC31
ER18SE15.007</GPH> ER18SE15.008</GPH>

cannot be included in this calculation since they are not subject to the HCl or HF limit.

(3) The owner or operator must not discharge or allow to be discharged to the atmosphere any 3-day, 24-hour rolling average emissions of D/F in excess of:

$$L_{c_{D/F}} = \frac{\sum_{i=1}^{n}\left(L_{ti_{D/F}} \times T_{ti}\right)}{\sum_{i=1}^{n}\left(T_{ti}\right)} \qquad \text{(Eq. 3)}$$

Where:

$L_{tiD/F}$ = The D/F emission limit for individual emission unit i in paragraph (i)(3) of this section for a group 1 furnace; and

$L_{cD/F}$ = The daily D/F emission limit for the secondary aluminum processing unit which is used to calculate the 3-day, 24-hour D/F emission limit applicable to the SAPU.

NOTE: Clean charge furnaces cannot be included in this calculation since they are not subject to the D/F limit.

(4) The owner or operator of a SAPU at a secondary aluminum production facility that is a major source may demonstrate compliance with the emission limits of paragraphs (k)(1) through (3) of this section by demonstrating that each emission unit within the SAPU is in compliance with the applicable emission limits of paragraphs (i) and (j) of this section.

(5) The owner or operator of a SAPU at a secondary aluminum production facility that is an area source may demonstrate compliance with the emission limits of paragraph (k)(3) of this section by demonstrating that each emission unit within the SAPU is in compliance with the emission limit of paragraph (i)(3) of this section.

(6) With the prior approval of the permitting authority for major sources, or the Administrator for area sources, an owner or operator may redesignate any existing group 1 furnace or in-line fluxer at a secondary aluminum production facility as a new emission unit. Any emission unit so redesignated may thereafter be included in a new SAPU at that facility. Any such redesignation will be solely for the purpose of this NESHAP and will be irreversible.

[65 FR 15710, Mar. 23, 2000, as amended at 67 FR 59792, Sept. 24, 2002; 67 FR 79816, Dec. 30, 2002; 70 FR 57517, Oct. 3, 2005; 80 FR 56739, Sept. 18, 2015]

§63.1506 Operating requirements.

(a) *Summary*. (1) The owner or operator must operate all new and existing affected sources and control equipment according to the requirements in this section. The affected sources, and their associated control equipment, listed in §63.1500(c)(1) through (4) of this subpart that are located at a secondary aluminum production facility that is an area source are subject to the operating requirements of paragraphs (b), (c), (d), (f), (g), (h), (m), (n), and (p) of this section.

(2) The owner or operator of an existing sweat furnace that meets the specifications of §63.1505(f)(1) must operate the sweat furnace and control equipment according to the requirements of this section on and after the compliance date of this standard.

(3) The owner or operator of a new sweat furnace that meets the specifications of §63.1505(f)(1) must operate the sweat furnace and control equipment according to the requirements of this section by March 23, 2000 or upon startup, whichever is later.

(4) Operating requirements are summarized in Table 2 to this subpart.

(5) At all times, the owner or operator must operate and maintain any affected source, including associated air pollution control equipment and monitoring equipment, in a manner consistent with safety and good air pollution control practices for minimizing

sfrattini on LAPJZKW1R2 with $$_JOB
VerDate Sep<11>2014 09:16 Apr 04, 2023 Jkt 256165 PO 00000 Frm 00071 Fmt 8010 Sfmt 8010 Q:\40\256165.XXX PC31
ER18SE15.009</GPH>

emissions. Determination of whether such operation and maintenance procedures are being used will be based on information available to the Administrator which may include, but is not limited to, monitoring results, review of operation and maintenance procedures, review of operation and maintenance records, and inspection of the source.

(b) *Labeling*. The owner or operator must provide and maintain easily visible labels posted at each group 1 furnace, group 2 furnace, in-line fluxer and scrap dryer/delacquering kiln/decoating kiln that identifies the applicable emission limits and means of compliance, including:

(1) The type of affected source or emission unit (*e.g.*, scrap dryer/delacquering kiln/decoating kiln, group 1 furnace, group 2 furnace, in-line fluxer).

(2) The applicable operational standard(s) and control method(s) (work practice or control device). This includes, but is not limited to, the type of charge to be used for a furnace (*e.g.*, clean scrap only, all scrap, etc.), flux materials and addition practices, and the applicable operating parameter ranges and requirements as incorporated in the OM&M plan.

(3) The afterburner operating temperature and design residence time for a scrap dryer/delacquering kiln/decoating kiln.

(c) *Capture/collection systems*. For each affected source or emission unit equipped with an add-on air pollution control device, the owner or operator must:

(1) Design and install a system for the capture and collection of emissions to meet the engineering standards for minimum exhaust rates or facial inlet velocities as contained in the ACGIH Guidelines (incorporated by reference, see § 63.14);

(2) Vent captured emissions through a closed system, except that dilution air may be added to emission streams for the purpose of controlling temperature at the inlet to a fabric filter; and

(3) Operate each capture/collection system according to the procedures and requirements in the OM&M plan.

(4) In lieu of paragraph (c)(1) of this section, the owner or operator of a sweat furnace may design, install and operate each sweat furnace in accordance with paragraphs (c)(4)(i) through (iii) of this section.

(i) As demonstrated by an annual negative air flow test conducted in accordance with § 63.1510(d)(3), air flow must be into the sweat furnace or towards the plane of the sweat furnace opening.

(ii) The owner or operator must maintain and operate the sweat furnace in a manner consistent with the good practices requirements for minimizing emissions, including unmeasured emissions, in paragraph (a)(5) of this section. Procedures that will minimize unmeasured emissions may include, but are not limited to the following:

(A) Increasing the exhaust rate from the furnace with draft fans, so as to capture emissions that might otherwise escape from the sweat furnace opening;

(B) Minimizing the time the sweat furnace doors are open;

(C) Keeping building doors and other openings closed to the greatest extent possible to minimize drafts that would divert emissions from being drawn into the sweat furnace;

(D) Maintaining burners on low-fire or pilot operation while the doors are open;

(E) Conducting periodic inspections and maintenance of sweat furnace components to ensure their proper operation and performance including but not limited to, door assemblies, seals, combustion chamber refractory material, afterburner and stack refractory, blowers, fans, dampers, burner tubes, door raise cables, pilot light assemblies, baffles, sweat furnace and afterburner shells and other internal structures.

(iii) The owner or operator must document in their operation, maintenance, and monitoring (OM&M) plan the procedures to be used to minimize emissions, including unmeasured emissions, in addition to the procedures to ensure the proper operation and maintenance of the sweat furnace.

(d) *Feed/charge weight*. The owner or operator of each affected source or emission unit subject to an emission

sfrattini on LAPJZKW1R2 with $$_JOB
VerDate Sep<11>2014 09:16 Apr 04, 2023 Jkt 256165 PO 00000 Frm 00072 Fmt 8010 Sfmt 8010 Q:\40\256165.XXX PC31

limit in kg/Mg (lb/ton) or μg/Mg (gr/ton) of feed/charge must:

(1) Except as provided in paragraph (d)(3) of this section, install and operate a device that measures and records or otherwise determine the weight of feed/charge (or throughput) for each operating cycle or time period used in the performance test; and

(2) Operate each weight measurement system or other weight determination procedure in accordance with the OM&M plan.

(3) The owner or operator may chose to measure and record aluminum production weight from an affected source or emission unit rather than feed/charge weight to an affected source or emission unit, provided that:

(i) The aluminum production weight, rather than feed/charge weight is measured and recorded for all emission units within a SAPU; and

(ii) All calculations to demonstrate compliance with the emission limits for SAPUs are based on aluminum production weight rather than feed/charge weight.

(e) *Aluminum scrap shredder*. The owner or operator of a scrap shredder with emissions controlled by a fabric filter must operate a bag leak detection system, or a continuous opacity monitor, or conduct visible emissions observations.

(1) If a bag leak detection system is used to meet the monitoring requirements in §63.1510, the owner or operator must:

(i) Initiate corrective action within 1-hour of a bag leak detection system alarm and complete the corrective action procedures in accordance with the OM&M plan.

(ii) Operate each fabric filter system such that the bag leak detection system alarm does not sound more than 5 percent of the operating time during a 6-month block reporting period. In calculating this operating time fraction, if inspection of the fabric filter demonstrates that no corrective action is required, no alarm time is counted. If corrective action is required, each alarm shall be counted as a minimum of 1 hour. If the owner or operator takes longer than 1 hour to initiate corrective action, the alarm time shall be counted as the actual amount of time taken by the owner or operator to initiate corrective action.

(2) If a continuous opacity monitoring system is used to meet the monitoring requirements in §63.1510, the owner or operator must initiate corrective action within 1-hour of any 6-minute average reading of 5 percent or more opacity and complete the corrective action procedures in accordance with the OM&M plan.

(3) If visible emission observations are used to meet the monitoring requirements in §63.1510, the owner or operator must initiate corrective action within 1-hour of any observation of visible emissions during a daily visible emissions test and complete the corrective action procedures in accordance with the OM&M plan.

(f) *Thermal chip dryer*. The owner or operator of a thermal chip dryer with emissions controlled by an afterburner must:

(1) Maintain the 3-hour block average operating temperature of each afterburner at or above the average temperature established during the performance test.

(2) Operate each afterburner in accordance with the OM&M plan.

(3) Operate each thermal chip dryer using only unpainted aluminum chips as the feedstock.

(g) *Scrap dryer/delacquering kiln/decoating kiln*. The owner or operator of a scrap dryer/delacquering kiln/decoating kiln with emissions controlled by an afterburner and a lime-injected fabric filter must:

(1) For each afterburner,

(i) Maintain the 3-hour block average operating temperature of each afterburner at or above the average temperature established during the performance test.

(ii) Operate each afterburner in accordance with the OM&M plan.

(2) If a bag leak detection system is used to meet the fabric filter monitoring requirements in §63.1510,

(i) Initiate corrective action within 1-hour of a bag leak detection system alarm and complete any necessary corrective action procedures in accordance with the OM&M plan.

(ii) Operate each fabric filter system such that the bag leak detection system alarm does not sound more than 5

sfrattini on LAPJZKW1R2 with $$_JOB
VerDate Sep<11>2014 09:16 Apr 04, 2023 Jkt 256165 PO 00000 Frm 00073 Fmt 8010 Sfmt 8010 Q:\40\256165.XXX PC31

percent of the operating time during a 6-month block reporting period. In calculating this operating time fraction, if inspection of the fabric filter demonstrates that no corrective action is required, no alarm time is counted. If corrective action is required, each alarm shall be counted as a minimum of 1 hour. If the owner or operator takes longer than 1 hour to initiate corrective action, the alarm time shall be counted as the actual amount of time taken by the owner or operator to initiate corrective action.

(3) If a continuous opacity monitoring system is used to meet the monitoring requirements in § 63.1510, initiate corrective action within 1-hour of any 6-minute average reading of 5 percent or more opacity and complete the corrective action procedures in accordance with the OM&M plan.

(4) Maintain the 3-hour block average inlet temperature for each fabric filter at or below the average temperature established during the performance test, plus 14 °C (plus 25 °F).

(5) For a continuous injection device, maintain free-flowing lime in the hopper to the feed device at all times and maintain the lime feeder setting at or above the level established during the performance test.

(h) *Sweat furnace*. The owner or operator of a sweat furnace with emissions controlled by an afterburner must:

(1) Maintain the 3-hour block average operating temperature of each afterburner at or above:

(i) The average temperature established during the performance test; or

(ii) 1600 °F if a performance test was not conducted, and the afterburner meets the specifications of § 63.1505(f)(1).

(2) Operate each afterburner in accordance with the OM&M plan.

(i) *Dross-only furnace*. The owner or operator of a dross-only furnace with emissions controlled by a fabric filter must:

(1) If a bag leak detection system is used to meet the monitoring requirements in § 63.1510,

(i) Initiate corrective action within 1-hour of a bag leak detection system alarm and complete the corrective action procedures in accordance with the OM&M plan.

(ii) Operate each fabric filter system such that the bag leak detection system alarm does not sound more than 5 percent of the operating time during a 6-month block reporting period. In calculating this operating time fraction, if inspection of the fabric filter demonstrates that no corrective action is required, no alarm time is counted. If corrective action is required, each alarm shall be counted as a minimum of 1 hour. If the owner or operator takes longer than 1 hour to initiate corrective action, the alarm time shall be counted as the actual amount of time taken by the owner or operator to initiate corrective action.

(2) If a continuous opacity monitoring system is used to meet the monitoring requirements in § 63.1510, initiate corrective action within 1-hour of any 6-minute average reading of 5 percent or more opacity and complete the corrective action procedures in accordance with the OM&M plan.

(3) Operate each furnace using dross and salt flux as the sole feedstock.

(j) *Rotary dross cooler*. The owner or operator of a rotary dross cooler with emissions controlled by a fabric filter must:

(1) If a bag leak detection system is used to meet the monitoring requirements in § 63.1510,

(i) Initiate corrective action within 1-hour of a bag leak detection system alarm and complete the corrective action procedures in accordance with the OM&M plan.

(ii) Operate each fabric filter system such that the bag leak detection system alarm does not sound more than 5 percent of the operating time during a 6-month block reporting period. In calculating this operating time fraction, if inspection of the fabric filter demonstrates that no corrective action is required, no alarm time is counted. If corrective action is required, each alarm shall be counted as a minimum of 1 hour. If the owner or operator takes longer than 1 hour to initiate corrective action, the alarm time shall be counted as the actual amount of time taken by the owner or operator to initiate corrective action.

sfrattini on LAPJZKW1R2 with $$_JOB
VerDate Sep<11>2014 09:16 Apr 04, 2023 Jkt 256165 PO 00000 Frm 00074 Fmt 8010 Sfmt 8010 Q:\40\256165.XXX PC31

(2) If a continuous opacity monitoring system is used to meet the monitoring requirements in §63.1510, initiate corrective action within 1 hour of any 6-minute average reading of 5 percent or more opacity and complete the corrective action procedures in accordance with the OM&M plan.

(k) *In-line fluxer*. The owner or operator of an in-line fluxer with emissions controlled by a lime-injected fabric filter must:

(1) If a bag leak detection system is used to meet the monitoring requirements in §63.1510,

(i) Initiate corrective action within 1-hour of a bag leak detection system alarm and complete the corrective action procedures in accordance with the OM&M plan.

(ii) Operate each fabric filter system such that the bag leak detection system alarm does not sound more than 5 percent of the operating time during a 6-month block reporting period. In calculating this operating time fraction, if inspection of the fabric filter demonstrates that no corrective action is required, no alarm time is counted. If corrective action is required, each alarm shall be counted as a minimum of 1 hour. If the owner or operator takes longer than 1 hour to initiate corrective action, the alarm time shall be counted as the actual amount of time taken by the owner or operator to initiate corrective action.

(2) If a continuous opacity monitoring system is used to meet the monitoring requirements in §63.1510, initiate corrective action within 1 hour of any 6-minute average reading of 5 percent or more opacity and complete the corrective action procedures in accordance with the OM&M plan.

(3) For a continuous injection system, maintain free-flowing lime in the hopper to the feed device at all times and maintain the lime feeder setting at or above the level established during the performance test.

(4) Maintain the total reactive chlorine flux injection rate for each operating cycle or time period used in the performance test at or below the average rate established during the performance test.

(l) *In-line fluxer using no reactive flux material*. The owner or operator of a new or existing in-line fluxer using no reactive flux materials must operate each in-line fluxer using no reactive flux materials.

(m) *Group 1 furnace with add-on air pollution control devices*. The owner or operator of a group 1 furnace with emissions controlled by a lime-injected fabric filter must:

(1) If a bag leak detection system is used to meet the monitoring requirements in §63.1510, the owner or operator must:

(i) Initiate corrective action within 1 hour of a bag leak detection system alarm.

(ii) Complete the corrective action procedures in accordance with the OM&M plan.

(iii) Operate each fabric filter system such that the bag leak detection system alarm does not sound more than 5 percent of the operating time during a 6-month block reporting period. In calculating this operating time fraction, if inspection of the fabric filter demonstrates that no corrective action is required, no alarm time is counted. If corrective action is required, each alarm shall be counted as a minimum of 1 hour. If the owner or operator takes longer than 1 hour to initiate corrective action, the alarm time shall be counted as the actual amount of time taken by the owner or operator to initiate corrective action.

(2) If a continuous opacity monitoring system is used to meet the monitoring requirements in §63.1510, the owner or operator must:

(i) Initiate corrective action within 1 hour of any 6-minute average reading of 5 percent or more opacity; and

(ii) Complete the corrective action procedures in accordance with the OM&M plan.

(3) Maintain the 3-hour block average inlet temperature for each fabric filter at or below the average temperature established during the performance test, plus 14 °C (plus 25 °F).

(4) For a continuous lime injection system, maintain free-flowing lime in the hopper to the feed device at all times and maintain the lime feeder setting at or above the level established during the performance test.

sfrattini on LAPJZKW1R2 with $$_JOB
VerDate Sep<11>2014 09:16 Apr 04, 2023 Jkt 256165 PO 00000 Frm 00075 Fmt 8010 Sfmt 8010 Q:\40\256165.XXX PC31

(5) Maintain the total reactive chlorine flux injection rate for each operating cycle or time period used in the performance test at or below the average rate established during the performance test.

(6) Operate each sidewell furnace such that:

(i) The level of molten metal remains above the top of the passage between the sidewell and hearth during reactive flux injection, unless emissions from both the sidewell and the hearth are included in demonstrating compliance with all applicable emission limits.

(ii) Reactive flux is added only in the sidewell, unless emissions from both the sidewell and the hearth are included in demonstrating compliance with all applicable emission limits.

(7) The operation of capture/collection systems and control devices associated with natural gas-fired, propane-fired or electrically heated group 1 furnaces that will be idled for at least 24 hours after the furnace cycle has been completed may be temporarily stopped. Operation of these capture/collection systems and control devices must be restarted before feed/charge, flux or alloying materials are added to the furnace.

(n) *Group 1 furnace without add-on air pollution control devices.* The owner or operator of a group 1 furnace (including a group 1 furnace that is part of a secondary aluminum processing unit) without add-on air pollution control devices must:

(1) Maintain the total reactive chlorine flux injection rate and fluorine flux injection rate for each operating cycle or time period used in the performance test, at or below the average rate established during the performance test.

(2) Operate each furnace in accordance with the work practice/pollution prevention measures documented in the OM&M plan and within the parameter values or ranges established in the OM&M plan.

(3) Operate each group 1 melting/holding furnace subject to the emission standards in § 63.1505(i)(2) using only clean charge as the feedstock.

(o) *Group 2 furnace.* The owner or operator of a new or existing group 2 furnace must:

(1) Operate each furnace using only clean charge as the feedstock.

(2) Operate each furnace using no reactive flux.

(p) *Corrective action.* When a process parameter or add-on air pollution control device operating parameter deviates from the value or range established during the performance test and incorporated in the OM&M plan, the owner or operator must initiate corrective action. Corrective action must restore operation of the affected source or emission unit (including the process or control device) to its normal or usual mode of operation as expeditiously as practicable in accordance with good air pollution control practices for minimizing emissions. Corrective actions taken must include follow-up actions necessary to return the process or control device parameter level(s) to the value or range of values established during the performance test and steps to prevent the likely recurrence of the cause of a deviation.

[65 FR 15710, Mar. 23, 2000, as amended at 67 FR 59792, Sept. 24, 2002; 67 FR 79816, Dec. 30, 2002; 69 FR 53984, Sept. 3, 2004; 80 FR 56740, Sept. 18, 2015]

§§ 63.1507–63.1509 [Reserved]

MONITORING AND COMPLIANCE REQUIREMENTS

§ 63.1510 Monitoring requirements.

(a) *Summary.* The owner or operator of a new or existing affected source or emission unit must monitor all control equipment and processes according to the requirements in this section. Monitoring requirements for each type of affected source and emission unit are summarized in Table 3 to this subpart. Area sources are subject to monitoring requirements for those affected sources listed in § 63.1500(c)(1) through (4) of this subpart, and associated control equipment as required by paragraphs (b) through (k), (n) through (q), and (s) through (w) of this section, including but not limited to:

(1) The OM&M plan required in paragraph (b) of this section pertaining to each affected source listed in § 63.1500(c)(1) through (4) of this subpart,

sfrattini on LAPJZKW1R2 with $$_JOB
VerDate Sep<11>2014 09:16 Apr 04, 2023 Jkt 256165 PO 00000 Frm 00076 Fmt 8010 Sfmt 8010 Q:\40\256165.XXX PC31

(2) The labeling requirements described in paragraph (c) of this section pertaining to group 1 furnaces processing other than clean charge, and scrap dryer/delacquering kiln/decoating kilns,

(3) The requirements for capture and collection described in paragraph (d) of this section for each controlled affected source (*i.e.*, affected sources with an add-on air pollution control device), listed in §63.1500(c)(1) through (4) of this subpart,

(4) The feed/charge weight monitoring requirements described in paragraph (e) of this section applicable to group 1 furnaces processing other than clean charge, scrap dryer/delacquering kiln/decoating kilns and thermal chip dryers,

(5) The bag leak detection system requirements described in paragraph (f) of this section applicable to all bag leak detection systems installed on fabric filters and lime injected fabric filters used to control each affected source listed in §63.1500(c)(1)–(4) of this subpart,

(6) The requirements for afterburners described in paragraph (g) of this section applicable to sweat furnaces, thermal chip dryers, and scrap dryer/delacquering kiln/decoating kilns,

(7) The requirements for monitoring fabric filter inlet temperature described in paragraph (h) of this section for all lime injected fabric filters used to control group 1 furnaces processing other than clean charge, sweat furnaces and scrap dryer/delacquering kiln/decoating kilns,

(8) The requirements for monitoring lime injection described in paragraph (i) of this section applicable to all lime injected fabric filters used to control emissions from group 1 furnaces processing other than clean charge, thermal chip dryers, sweat furnaces and scrap dryer/delacquering kiln/decoating kilns,

(9) The requirements for monitoring total reactive flux injection described in paragraph (j) of this section for all group 1 furnaces processing other than clean charge,

(10) The requirements described in paragraph (k) of this section for thermal chip dryers,

(11) The requirements described in paragraph (n) of this section for controlled group 1 sidewell furnaces processing other than clean charge,

(12) The requirements described in paragraph (o) of this section for uncontrolled group 1 sidewell furnaces processing other than clean charge,

(13) The requirements described in paragraph (p) of this section for scrap inspection programs for uncontrolled group 1 furnaces,

(14) The requirements described in paragraph (q) of this section for monitoring scrap contamination level for uncontrolled group 1 furnaces,

(15) The requirements described in paragraph (s) of this section for secondary aluminum processing units, limited to compliance with limits for emissions of D/F from group 1 furnaces processing other than clean charge,

(16) The requirements described in paragraph (t) of this section for secondary aluminum processing units limited to compliance with limits for emissions of D/F from group 1 furnaces processing other than clean charge,

(17) The requirements described in paragraph (u) of this section for secondary aluminum processing units limited to compliance with limits for emissions of D/F from group 1 furnaces processing other than clean charge,

(18) The requirements described in paragraph (v) of this section for alternative lime addition monitoring methods applicable to lime-injected fabric filters used to control emissions from group 1 furnaces processing other than clean charge, thermal chip dryers, sweat furnaces and scrap dryer/delacquering kiln/decoating kilns, and

(19) The requirements described in paragraph (w) of this section for approval of alternate methods for monitoring group 1 furnaces processing other than clean charge, thermal chip dryers, scrap dryer/delacquering kiln/decoating kilns and sweat furnaces and associated control devices for the control of D/F emissions.

(b) *Operation, maintenance, and monitoring (OM&M) plan.* The owner or operator must prepare and implement for each new or existing affected source and emission unit, a written OM&M plan. The owner or operator of an existing affected source must submit the

sfrattini on LAPJZKW1R2 with $$_JOB
VerDate Sep<11>2014 09:16 Apr 04, 2023 Jkt 256165 PO 00000 Frm 00077 Fmt 8010 Sfmt 8010 Q:\40\256165.XXX PC31

OM&M plan to the permitting authority for major sources, or the Administrator for area sources no later than the compliance date established by § 63.1501. The owner or operator of any new affected source must submit the OM&M plan to the permitting authority for major sources, or the Administrator for area sources within 90 days after a successful initial performance test under § 63.1511(b), or within 90 days after the compliance date established by § 63.1501 if no initial performance test is required. The plan must be accompanied by a written certification by the owner or operator that the OM&M plan satisfies all requirements of this section and is otherwise consistent with the requirements of this subpart. The owner or operator must comply with all of the provisions of the OM&M plan as submitted to the permitting authority for major sources, or the Administrator for area sources, unless and until the plan is revised in accordance with the following procedures. If the permitting authority for major sources, or the Administrator for area sources determines at any time after receipt of the OM&M plan that any revisions of the plan are necessary to satisfy the requirements of this section or this subpart, the owner or operator must promptly make all necessary revisions and resubmit the revised plan. If the owner or operator determines that any other revisions of the OM&M plan are necessary, such revisions will not become effective until the owner or operator submits a description of the changes and a revised plan incorporating them to the permitting authority for major sources, or the Administrator for area sources. Each plan must contain the following information:

(1) Process and control device parameters to be monitored to determine compliance, along with established operating levels or ranges, as applicable, for each process and control device.

(2) A monitoring schedule for each affected source and emission unit.

(3) Procedures for the proper operation and maintenance of each process unit and add-on control device used to meet the applicable emission limits or standards in § 63.1505.

(4) Procedures for the proper operation and maintenance of monitoring devices or systems used to determine compliance, including:

(i) Calibration and certification of accuracy of each monitoring device, at least once every 6 months, according to the manufacturer's instructions; and

(ii) Procedures for the quality control and quality assurance of continuous emission or opacity monitoring systems as required by the general provisions in subpart A of this part.

(5) Procedures for monitoring process and control device parameters, including lime injection rates, procedures for annual inspections of afterburners, and if applicable, the procedure to be used for determining charge/feed (or throughput) weight if a measurement device is not used.

(6) Corrective actions to be taken when process or operating parameters or add-on control device parameters deviate from the value or range established in paragraph (b)(1) of this section, including:

(i) Procedures to determine and record the cause of any deviation or excursion, and the time the deviation or excursion began and ended; and

(ii) Procedures for recording the corrective action taken, the time corrective action was initiated, and the time/date corrective action was completed.

(7) A maintenance schedule for each process and control device that is consistent with the manufacturer's instructions and recommendations for routine and long-term maintenance.

(8) Documentation of the work practice and pollution prevention measures used to achieve compliance with the applicable emission limits and a site-specific monitoring plan as required in paragraph (o) of this section for each group 1 furnace not equipped with an add-on air pollution control device.

(9) Procedures to be followed when changing furnace classifications under the provisions of § 63.1514.

(c) *Labeling*. The owner or operator must inspect the labels for each group 1 furnace, group 2 furnace, in-line fluxer and scrap dryer/delacquering kiln/decoating kiln at least once per calendar month to confirm that posted labels as required by the operational

sfrattini on LAPJZKW1R2 with $$_JOB
VerDate Sep<11>2014 09:16 Apr 04, 2023 Jkt 256165 PO 00000 Frm 00078 Fmt 8010 Sfmt 8010 Q:\40\256165.XXX PC31

standard in §63.1506(b) are intact and legible.

(d) *Capture/collection system.* The owner or operator must:

(1) Install, operate, and maintain a capture/collection system for each affected source and emission unit equipped with an add-on air pollution control device; and

(2) Inspect each capture/collection and closed vent system at least once each calendar year to ensure that each system is operating in accordance with the operating requirements in §63.1506(c) and record the results of each inspection. This inspection shall include a volumetric flow rate measurement taken at a location in the ductwork downstream of the hoods that is representative of the actual volumetric flow rate without interference due to leaks, ambient air added for cooling or ducts from other hoods. The flow rate measurement must be performed in accordance with paragraphs (d)(2)(i), (ii), or (iii) of this section. As an alternative to the flow rate measurement specified in this paragraph, the inspection may satisfy the requirements of this paragraph, including the operating requirements in §63.1506(c), by including permanent total enclosure verification in accordance with paragraph (d)(2)(i) or (iv) of this section. Inspections that fail to successfully demonstrate that the requirements of §63.1506(c) are met, must be followed by repair or adjustment to the system operating conditions and a follow up inspection within 45 days to demonstrate that §63.1506(c) requirements are fully met.

(i) Conduct annual flow rate measurements using EPA Methods 1 and 2 in appendix A to 40 CFR part 60, or conduct annual verification of a permanent total enclosure using EPA Method 204; or you may follow one of the three alternate procedures described in paragraphs (ii), (iii), or (iv) of this section to maintain system operations in accordance with an operating limit established during the performance test. The operating limit is determined as the average reading of a parametric monitoring instrument (Magnehelic®, manometer, anemometer, or other parametric monitoring instrument) and technique as described in paragraphs (d)(2)(ii), (iii), and (iv) of this section. A deviation, as defined in paragraphs (ii), (iii), and (iv) of this section, from the parametric monitoring operating limit requires the owner or operator to make repairs or adjustments to restore normal operation within 45 days.

(ii) As an alternative to annual flow rate measurements using EPA Methods 1 and 2, measurement with EPA Methods 1 and 2 can be performed once every 5 years, provided that:

(A) A flow rate indicator consisting of a pitot tube and differential pressure gauge (Magnehelic®, manometer or other differential pressure gauge) is installed with the pitot tube tip located at a representative point of the duct proximate to the location of the Methods 1 and 2 measurement site; and

(B) The flow rate indicator is installed and operated in accordance with the manufacturer's specifications; and

(C) The differential pressure is recorded during the Method 2 performance test series; and

(D) Daily differential pressure readings are made by taking three measurements with at least 5 minutes between each measurement and averaging the three measurements; and readings are recorded daily and maintained at or above 90 percent of the average pressure differential indicated by the flow rate indicator during the most recent Method 2 performance test series; and

(E) An inspection of the pitot tube and associated lines for damage, plugging, leakage and operational integrity is conducted at least once per year; or

(iii) As an alternative to annual flow rate measurements using EPA Methods 1 and 2, measurement with EPA Methods 1 and 2 can be performed once every 5 years, provided that:

(A) Daily measurements of the capture and collection system's fan revolutions per minute (RPM) or fan motor amperage (amps) are made by taking three measurements with at least 5 minutes between each measurement, and averaging the three measurements; and readings are recorded daily and maintained at or above 90 percent of the average RPM or amps measured during the most recent Method 2 performance test series; or

sfrattini on LAPJZKW1R2 with $$_JOB
VerDate Sep<11>2014 09:16 Apr 04, 2023 Jkt 256165 PO 00000 Frm 00079 Fmt 8010 Sfmt 8010 Q:\40\256165.XXX PC31

(B) A static pressure measurement device is installed in the duct immediately downstream of the hood exit, and daily pressure readings are made by taking three measurements with at least 5 minutes between each measurement, and averaging the three measurements; and readings are recorded daily and maintained at 90 percent or better of the average vacuum recorded during the most recent Method 2 performance test series; or

(C) A hotwire anemometer, ultrasonic flow meter, cross-duct pressure differential sensor, venturi pressure differential monitoring or orifice plate equipped with an associated thermocouple and automated data logging software and associated hardware is installed; and daily readings are made by taking three measurements with at least 5 minutes between each measurement, and averaging the three measurements; and readings are recorded daily and maintained at 90 percent or greater of the average readings during the most recent Method 2 performance test series; or

(D) For booth-type hoods, hotwire anemometer measurements of hood face velocity are performed simultaneously with EPA Method 1 and 2 measurements, and the annual hood face velocity measurements confirm that the enclosure draft is maintained at 90 percent or greater of the average readings during the most recent Method 2 performance test series. Daily readings are made by taking three measurements with at least 5 minutes between each measurement, and averaging the three measurements; and readings are recorded daily and maintained at 90 percent or greater of the average readings during the most recent Method 1 and 2 performance test series.

(iv) As an alternative to the annual verification of a permanent total enclosure using EPA Method 204, verification can be performed once every 5 years, provided that:

(A) Negative pressure in the enclosure is directly monitored by a pressure indicator installed at a representative location;

(B) Pressure readings are recorded daily or the system is interlocked to halt material feed should the system not operate under negative pressure;

(C) An inspection of the pressure indicator for damage and operational integrity is conducted at least once per calendar year.

(3) For sweat furnaces, in lieu of paragraph (d)(2) of this section, the owner or operator of a sweat furnace may inspect each sweat furnace at least once each calendar year to ensure that they are being operated in accordance with the negative air flow requirements in § 63.1506(c)(4). The owner or operator of a sweat furnace must demonstrate negative air flow into the sweat furnace in accordance with paragraphs (d)(3)(i) through (iii) of this section.

(i) Perform an annual visual smoke test to demonstrate airflow into the sweat furnace or towards the plane of the sweat furnace opening;

(ii) Perform the smoke test using a smoke source, such as a smoke tube, smoke stick, smoke cartridge, smoke candle or other smoke source that produces a persistent and neutral buoyancy aerosol; and

(iii) Perform the visual smoke test at a safe distance from and near the center of the sweat furnace opening.

(e) *Feed/charge weight.* The owner or operator of an affected source or emission unit subject to an emission limit in kg/Mg (lb/ton) or μg/Mg (gr/ton) of feed/charge must install, calibrate, operate, and maintain a device to measure and record the total weight of feed/charge to, or the aluminum production from, the affected source or emission unit over the same operating cycle or time period used in the performance test. Feed/charge or aluminum production within SAPUs must be measured and recorded on an emission unit-by-emission unit basis. As an alternative to a measurement device, the owner or operator may use a procedure acceptable to the permitting authority for major sources, or the Administrator for area sources to determine the total weight of feed/charge or aluminum production to the affected source or emission unit.

(1) The accuracy of the weight measurement device or procedure must be ±1 percent of the weight being measured. The owner or operator may apply to

sfrattini on LAPJZKW1R2 with $$_JOB
VerDate Sep<11>2014 09:16 Apr 04, 2023 Jkt 256165 PO 00000 Frm 00080 Fmt 8010 Sfmt 8010 Q:\40\256165.XXX PC31

the permitting agency for approval to use a device of alternative accuracy if the required accuracy cannot be achieved as a result of equipment layout or charging practices. A device of alternative accuracy will not be approved unless the owner or operator provides assurance through data and information that the affected source will meet the relevant emission standard.

(2) The owner or operator must verify the calibration of the weight measurement device in accordance with the schedule specified by the manufacturer, or if no calibration schedule is specified, at least once every 6 months.

(f) *Fabric filters and lime-injected fabric filters.* The owner or operator of an affected source or emission unit using a fabric filter or lime-injected fabric filter to comply with the requirements of this subpart must install, calibrate, maintain, and continuously operate a bag leak detection system as required in paragraph (f)(1) of this section or a continuous opacity monitoring system as required in paragraph (f)(2) of this section. The owner or operator of an aluminum scrap shredder must install and operate a bag leak detection system as required in paragraph (f)(1) of this section, install and operate a continuous opacity monitoring system as required in paragraph (f)(2) of this section, or conduct visible emission observations as required in paragraph (f)(3) of this section.

(1) These requirements apply to the owner or operator of a new or existing affected source or existing emission unit using a bag leak detection system.

(i) The owner or operator must install and operate a bag leak detection system for each exhaust stack of a fabric filter.

(ii) Each bag leak detection system must be installed, calibrated, operated, and maintained according to the manufacturer's operating instructions.

(iii) The bag leak detection system must be certified by the manufacturer to be capable of detecting PM emissions at concentrations of 10 milligrams per actual cubic meter (0.0044 grains per actual cubic foot) or less.

(iv) The bag leak detection system sensor must provide output of relative or absolute PM loadings.

(v) The bag leak detection system must be equipped with a device to continuously record the output signal from the sensor.

(vi) The bag leak detection system must be equipped with an alarm system that will sound automatically when an increase in relative PM emissions over a preset level is detected. The alarm must be located where it is easily heard by plant operating personnel.

(vii) For positive pressure fabric filter systems, a bag leak detection system must be installed in each baghouse compartment or cell. For negative pressure or induced air fabric filters, the bag leak detector must be installed downstream of the fabric filter.

(viii) Where multiple detectors are required, the system's instrumentation and alarm may be shared among detectors.

(ix) The baseline output must be established by adjusting the range and the averaging period of the device and establishing the alarm set points and the alarm delay time.

(x) Following initial adjustment of the system, the owner or operator must not adjust the sensitivity or range, averaging period, alarm set points, or alarm delay time except as detailed in the OM&M plan. In no case may the sensitivity be increased by more than 100 percent or decreased more than 50 percent over a 365-day period unless such adjustment follows a complete fabric filter inspection which demonstrates that the fabric filter is in good operating condition.

(2) These requirements apply to the owner or operator of a new or existing affected source or an existing emission unit using a continuous opacity monitoring system.

(i) The owner or operator must install, calibrate, maintain, and operate a continuous opacity monitoring system to measure and record the opacity of emissions exiting each exhaust stack.

(ii) Each continuous opacity monitoring system must meet the design and installation requirements of Performance Specification 1 in appendix B to 40 CFR part 60.

(3) These requirements apply to the owner or operator of a new or existing

sfrattini on LAPJZKW1R2 with $$_JOB
VerDate Sep<11>2014 09:16 Apr 04, 2023 Jkt 256165 PO 00000 Frm 00081 Fmt 8010 Sfmt 8010 Q:\40\256165.XXX PC31

aluminum scrap shredder who conducts visible emission observations. The owner or operator must:

(i) Perform a visible emissions test for each aluminum scrap shredder using a certified observer at least once a day according to the requirements of Method 9 in appendix A to 40 CFR part 60. Each Method 9 test must consist of five 6-minute observations in a 30-minute period; and

(ii) Record the results of each test.

(4) As an alternative to the requirements of paragraph (f)(3) of this section, the owner or operator of a new or existing aluminum scrap shredder may measure the opacity of the emissions discharged through a stack or stacks using ASTM Method D7520–13 (incorporated by reference, see § 63.14) subject to the requirements of paragraphs § 63.1510(f)(4)(i) through (iv) of this section. Each test must consist of five 6-minute observations in a 30-minute period.

(i) During the digital camera opacity technique (DCOT) certification procedure outlined in Section 9.2 of ASTM D7520–13, the owner or operator or the DCOT vendor must present the plumes in front of various backgrounds of color and contrast representing conditions anticipated during field use such as blue sky, trees, and mixed backgrounds (clouds and/or a sparse tree stand).

(ii) The owner or operator must also have standard operating procedures in place including daily or other frequency quality checks to ensure that equipment is within manufacturing specifications as outlined in Section 8.1 of ASTM D7520–13.

(iii) The owner or operator must follow the recordkeeping procedures outlined in § 63.10(b)(1) for DCOT certification, compliance report, data sheets and all raw unaltered JPEGs used for opacity and certification determination.

(iv) The owner or operator or the DCOT vendor must have a minimum of four (4) independent technology users apply the software to determine the visible opacity of the 300 certification plumes. For each set of 25 plumes, the user may not exceed 15 percent opacity on any one reading and the average error must not exceed 7.5 percent opacity.

(g) *Afterburner*. These requirements apply to the owner or operator of an affected source using an afterburner to comply with the requirements of this subpart.

(1) The owner or operator must install, calibrate, maintain, and operate a device to continuously monitor and record the operating temperature of the afterburner consistent with the requirements for continuous monitoring systems in subpart A of this part.

(2) The temperature monitoring device must meet each of these performance and equipment specifications:

(i) The temperature monitoring device must be installed at the exit of the combustion zone of each afterburner.

(ii) The monitoring system must record the temperature in 15-minute block averages and determine and record the average temperature for each 3-hour block period.

(iii) The recorder response range must include zero and 1.5 times the average temperature established according to the requirements in § 63.1512(m).

(iv) The reference method must be a National Institute of Standards and Technology calibrated reference thermocouple-potentiometer system or alternate reference, subject to approval by the Administrator.

(3) The owner or operator must conduct an inspection of each afterburner at least once a year and record the results. At a minimum, an inspection must include:

(i) Inspection of all burners, pilot assemblies, and pilot sensing devices for proper operation and clean pilot sensor;

(ii) Inspection for proper adjustment of combustion air;

(iii) Inspection of internal structures (*e.g.*, baffles) to ensure structural integrity;

(iv) Inspection of dampers, fans, and blowers for proper operation;

(v) Inspection for proper sealing;

(vi) Inspection of motors for proper operation;

(vii) Inspection of combustion chamber refractory lining and clean and replace lining as necessary;

(viii) Inspection of afterburner shell for corrosion and/or hot spots;

sfrattini on LAPJZKW1R2 with $$_JOB
VerDate Sep<11>2014 09:16 Apr 04, 2023 Jkt 256165 PO 00000 Frm 00082 Fmt 8010 Sfmt 8010 Q:\40\256165.XXX PC31

(ix) Documentation, for the burn cycle that follows the inspection, that the afterburner is operating properly and any necessary adjustments have been made; and

(x) Verification that the equipment is maintained in good operating condition.

(xi) Following an equipment inspection, all necessary repairs must be completed in accordance with the requirements of the OM&M plan.

(h) *Fabric filter inlet temperature*. These requirements apply to the owner or operator of a scrap dryer/delacquering kiln/decoating kiln or a group 1 furnace using a lime-injected fabric filter to comply with the requirements of this subpart.

(1) The owner or operator must install, calibrate, maintain, and operate a device to continuously monitor and record the temperature of the fabric filter inlet gases consistent with the requirements for continuous monitoring systems in subpart A of this part.

(2) The temperature monitoring device must meet each of these performance and equipment specifications:

(i) The monitoring system must record the temperature in 15-minute block averages and calculate and record the average temperature for each 3-hour block period.

(ii) The recorder response range must include zero and 1.5 times the average temperature established according to the requirements in §63.1512(n).

(iii) The reference method must be a National Institute of Standards and Technology calibrated reference thermocouple-potentiometer system or alternate reference, subject to approval by the Administrator.

(i) *Lime injection*. These requirements apply to the owner or operator of an affected source or emission unit using a lime-injected fabric filter to comply with the requirements of this subpart.

(1) The owner or operator of a continuous lime injection system must verify that lime is always free-flowing by either:

(i) Inspecting each feed hopper or silo at least once each 8-hour period and recording the results of each inspection. If lime is found not to be free-flowing during any of the 8-hour periods, the owner or operator must increase the frequency of inspections to at least once every 4-hour period for the next 3 days. The owner or operator may return to inspections at least once every 8 hour period if corrective action results in no further blockages of lime during the 3-day period; or

(ii) Subject to the approval of the permitting agency, installing, operating and maintaining a load cell, carrier gas/lime flow indicator, carrier gas pressure drop measurement system or other system to confirm that lime is free-flowing. If lime is found not to be free-flowing, the owner or operator must promptly initiate and complete corrective action, or

(iii) Subject to the approval of the permitting agency, installing, operating and maintaining a device to monitor the concentration of HCl at the outlet of the fabric filter. If an increase in the concentration of HCl indicates that the lime is not free-flowing, the owner or operator must promptly initiate and complete corrective action.

(2) The owner or operator of a continuous lime injection system must record the lime feeder setting once each day of operation.

(3) An owner or operator who intermittently adds lime to a lime-injected fabric filter must obtain approval from the permitting authority for major sources, or the Administrator for area sources for a lime addition monitoring procedure. The permitting authority for major sources, or the Administrator for area sources will not approve a monitoring procedure unless data and information are submitted establishing that the procedure is adequate to ensure that relevant emission standards will be met on a continuous basis.

(4) At least once per month, verify that the lime injection rate in pounds per hour (lb/hr) is no less than 90 percent of the lime injection rate used to demonstrate compliance during your most recent performance test. If the monthly check of the lime injection rate is below the 90 percent, the owner or operator must repair or adjust the lime injection system to restore normal operation within 45 days. The owner or operator may request from the permitting authority for major sources, or the Administrator for area

sfrattini on LAPJZKW1R2 with $$_JOB
VerDate Sep<11>2014 09:16 Apr 04, 2023 Jkt 256165 PO 00000 Frm 00083 Fmt 8010 Sfmt 8010 Q:\40\256165.XXX PC31

sources, an extension of up to an additional 45 days to demonstrate that the lime injection rate is no less than 90 percent of the lime injection rate used to demonstrate compliance during the most recent performance test. In the event that a lime feeder is repaired or replaced, the feeder must be calibrated, and the feed rate must be restored to the lb/hr feed rate operating limit established during the most recent performance test within 45 days. The owner or operator may request from the permitting authority for major sources, or the Administrator for area sources, an extension of up to an additional 45 days to complete the repair or replacement and establishing a new setting. The repair or replacement, and the establishment of the new feeder setting(s) must be documented in accordance with the recordkeeping requirements of § 63.1517.

(j) *Total reactive flux injection rate.* These requirements apply to the owner or operator of a group 1 furnace (with or without add-on air pollution control devices) or in-line fluxer. The owner or operator must:

(1) Install, calibrate, operate, and maintain a device to continuously measure and record the weight of gaseous or liquid reactive flux injected to each affected source or emission unit.

(i) The monitoring system must record the weight for each 15-minute block period, during which reactive fluxing occurs, over the same operating cycle or time period used in the performance test.

(ii) The accuracy of the weight measurement device must be ±1 percent of the weight of the reactive component of the flux being measured. The owner or operator may apply to the permitting authority for major sources, or the Administrator for area sources for permission to use a weight measurement device of alternative accuracy in cases where the reactive flux flow rates are so low as to make the use of a weight measurement device of ±1 percent impracticable. A device of alternative accuracy will not be approved unless the owner or operator provides assurance through data and information that the affected source will meet the relevant emission standards.

(iii) The owner or operator must verify the calibration of the weight measurement device in accordance with the schedule specified by the manufacturer, or if no calibration schedule is specified, at least once every 6 months.

(2) Calculate and record the gaseous or liquid reactive flux injection rate (kg/Mg or lb/ton) for each operating cycle or time period used in the performance test using the procedure in § 63.1512(o).

(3) Record, for each 15-minute block period during each operating cycle or time period used in the performance test during which reactive fluxing occurs, the time, weight, and type of flux for each addition of:

(i) Gaseous or liquid reactive flux other than chlorine; and

(ii) Solid reactive flux.

(4) Calculate and record the total reactive flux injection rate for each operating cycle or time period used in the performance test using the procedure in § 63.1512(o). For solid flux that is added intermittently, record the amount added for each operating cycle or time period used in the performance test using the procedures in § 63.1512(o).

(5) The owner or operator of a group 1 furnace or in-line fluxer performing reactive fluxing may apply to the Administrator for approval of an alternative method for monitoring and recording the total reactive flux addition rate based on monitoring the weight or quantity of reactive flux per ton of feed/charge for each operating cycle or time period used in the performance test. An alternative monitoring method will not be approved unless the owner or operator provides assurance through data and information that the affected source will meet the relevant emission standards on a continuous basis.

(k) *Thermal chip dryer.* These requirements apply to the owner or operator of a thermal chip dryer with emissions controlled by an afterburner. The owner or operator must:

(1) Record the type of materials charged to the unit for each operating cycle or time period used in the performance test.

(2) Submit a certification of compliance with the applicable operational

sfrattini on LAPJZKW1R2 with $$_JOB
VerDate Sep<11>2014 09:16 Apr 04, 2023 Jkt 256165 PO 00000 Frm 00084 Fmt 8010 Sfmt 8010 Q:\40\256165.XXX PC31

standard for charge materials in §63.1506(f)(3) for each 6-month reporting period. Each certification must contain the information in §63.1516(b)(2)(i).

(l) *Dross-only furnace*. These requirements apply to the owner or operator of a dross-only furnace. The owner or operator must:

(1) Record the materials charged to each unit for each operating cycle or time period used in the performance test.

(2) Submit a certification of compliance with the applicable operational standard for charge materials in §63.1506(i)(3) for each 6-month reporting period. Each certification must contain the information in §63.1516(b)(2)(ii).

(m) *In-line fluxers using no reactive flux*. The owner or operator of an in-line fluxer that uses no reactive flux materials must submit a certification of compliance with the operational standard for no reactive flux materials in §63.1506(l) for each 6-month reporting period. Each certification must contain the information in §63.1516(b)(2)(vi).

(n) *Sidewell group 1 furnace with add-on air pollution control devices*. These requirements apply to the owner or operator of a sidewell group 1 furnace using add-on air pollution control devices. The owner or operator must:

(1) Record in an operating log for each tap of a sidewell furnace whether the level of molten metal was above the top of the passage between the sidewell and hearth during reactive flux injection, unless the furnace hearth was also equipped with an add-on control device. If visual inspection of the molten metal level is not possible, the molten metal level must be determined using physical measurement methods.

(2) Submit a certification of compliance with the operational standards in §63.1506(m)(6) for each 6-month reporting period. Each certification must contain the information in §63.1516(b)(2)(iii).

(o) *Group 1 furnace without add-on air pollution control devices*. These requirements apply to the owner or operator of a group 1 furnace that is not equipped with an add-on air pollution control device.

(1) The owner or operator must develop, in consultation with the permitting authority for major sources, or the Administrator for area sources, a written site-specific monitoring plan. The site-specific monitoring plan must be submitted to the permitting authority for major sources, or the Administrator for area sources as part of the OM&M plan. The site-specific monitoring plan must contain sufficient procedures to ensure continuing compliance with all applicable emission limits and must demonstrate, based on documented test results, the relationship between emissions of PM, HCl, and D/F (and HF for uncontrolled group 1 furnaces), and the proposed monitoring parameters for each pollutant. Test data must establish the highest level of PM, HCl, and D/F (and HF for uncontrolled group 1 furnaces) that will be emitted from the furnace in accordance with §63.1511(b)(1). If the permitting authority for major sources, or the Administrator for area sources determines that any revisions of the site-specific monitoring plan are necessary to meet the requirements of this section or this subpart, the owner or operator must promptly make all necessary revisions and resubmit the revised plan.

(i) The owner or operator of an existing affected source must submit the site-specific monitoring plan to the permitting authority for major sources, or the Administrator for area sources for review at least 6 months prior to the compliance date.

(ii) The permitting authority for major sources, or the Administrator for area sources will review and approve or disapprove a proposed plan, or request changes to a plan, based on whether the plan contains sufficient provisions to ensure continuing compliance with applicable emission limits and demonstrates, based on documented test results, the relationship between emissions of PM, HCl, and D/F (and HF for uncontrolled group 1 furnaces) and the proposed monitoring parameters for each pollutant. Test data must establish the highest level of PM, HCl, and D/F (and HF for uncontrolled group 1 furnaces) that will be emitted from the furnace. Subject to approval of the OM&M plan, the highest levels

sfrattini on LAPJZKW1R2 with $$_JOB
VerDate Sep<11>2014 09:16 Apr 04, 2023 Jkt 256165 PO 00000 Frm 00085 Fmt 8010 Sfmt 8010 Q:\40\256165.XXX PC31

may be determined by conducting performance tests and monitoring operating parameters in accordance with § 63.1511(b)(1).

(2) Each site-specific monitoring plan must document each work practice, equipment/design practice, pollution prevention practice, or other measure used to meet the applicable emission standards.

(3) Each site-specific monitoring plan must include provisions for unit labeling as required in paragraph (c) of this section, feed/charge weight measurement (or production weight measurement) as required in paragraph (e) of this section and flux weight measurement as required in paragraph (j) of this section.

(4) Each site-specific monitoring plan for a melting/holding furnace subject to the clean charge emission standard in § 63.1505(i)(3) must include these requirements:

(i) The owner or operator must record the type of feed/ charge (*e.g.*, ingot, thermally dried chips, dried scrap, etc.) for each operating cycle or time period used in the performance test; and

(ii) The owner or operator must submit a certification of compliance with the applicable operational standard for clean charge materials in § 63.1506(n)(3) for each 6-month reporting period. Each certification must contain the information in § 63.1516(b)(2)(iv).

(5) If a continuous emission monitoring system is included in a site-specific monitoring plan, the plan must include provisions for the installation, operation, and maintenance of the system to provide quality-assured measurements in accordance with all applicable requirements of the general provisions in subpart A of this part.

(6) If a continuous opacity monitoring system is included in a site-specific monitoring plan, the plan must include provisions for the installation, operation, and maintenance of the system to provide quality-assured measurements in accordance with all applicable requirements of this subpart.

(7) If a site-specific monitoring plan includes a scrap inspection program for monitoring the scrap contaminant level of furnace feed/charge materials, the plan must include provisions for the demonstration and implementation of the program in accordance with all applicable requirements in paragraph (p) of this section.

(8) If a site-specific monitoring plan includes a calculation method for monitoring the scrap contaminant level of furnace feed/charge materials, the plan must include provisions for the demonstration and implementation of the program in accordance with all applicable requirements in paragraph (q) of this section.

(p) *Scrap inspection program for group 1 furnace without add-on air pollution control devices.* A scrap inspection program must include:

(1) A proven method for collecting representative samples and measuring the oil and coatings content of scrap samples;

(2) A scrap inspector training program;

(3) An established correlation between visual inspection and physical measurement of oil and coatings content of scrap samples;

(4) Periodic physical measurements of oil and coatings content of randomly-selected scrap samples and comparison with visual inspection results;

(5) A system for assuring that only acceptable scrap is charged to an affected group 1 furnace; and

(6) Recordkeeping requirements to document conformance with plan requirements.

(q) *Monitoring of scrap contamination level by calculation method for group 1 furnace without add-on air pollution control devices.* The owner or operator of a group 1 furnace dedicated to processing a distinct type of furnace feed/charge composed of scrap with a uniform composition (such as rejected product from a manufacturing process for which the coating-to-scrap ratio can be documented) may include a program in the site-specific monitoring plan for determining, monitoring, and certifying the scrap contaminant level using a calculation method rather than a scrap inspection program. A scrap contaminant monitoring program using a calculation method must include:

(1) Procedures for the characterization and documentation of the contaminant level of the scrap prior to the performance test.

sfrattini on LAPJZKW1R2 with $$_JOB
VerDate Sep<11>2014 09:16 Apr 04, 2023 Jkt 256165 PO 00000 Frm 00086 Fmt 8010 Sfmt 8010 Q:\40\256165.XXX PC31

(2) Limitations on the furnace feed/charge to scrap of the same composition as that used in the performance test. If the performance test was conducted with a mixture of scrap and clean charge, limitations on the proportion of scrap in the furnace feed/charge to no greater than the proportion used during the performance test.

(3) Operating, monitoring, recordkeeping, and reporting requirements to ensure that no scrap with a contaminant level higher than that used in the performance test is charged to the furnace.

(r) *Group 2 furnace.* These requirements apply to the owner or operator of a new or existing group 2 furnace. The owner or operator must:

(1) Record a description of the materials charged to each furnace, including any nonreactive, non-HAP-containing/non-HAP-generating fluxing materials or agents.

(2) Submit a certification of compliance with the applicable operational standard for charge materials in §63.1506(o) for each 6-month reporting period. Each certification must contain the information in §63.1516(b)(2)(v).

(s) *Site-specific requirements for secondary aluminum processing units.* (1) An owner or operator of a secondary aluminum processing unit at a facility must include, within the OM&M plan prepared in accordance with §63.1510(b), the following information:

(i) The identification of each emission unit in the secondary aluminum processing unit;

(ii) The specific control technology or pollution prevention measure to be used for each emission unit in the secondary aluminum processing unit and the date of its installation or application;

(iii) The emission limit calculated for each secondary aluminum processing unit and performance test results with supporting calculations demonstrating initial compliance with each applicable emission limit;

(iv) Information and data demonstrating compliance for each emission unit with all applicable design, equipment, work practice or operational standards of this subpart; and

(v) The monitoring requirements applicable to each emission unit in a secondary aluminum processing unit and the monitoring procedures for daily calculation of the 3-day, 24-hour rolling average using the procedure in §63.1510(t).

(2) The SAPU compliance procedures within the OM&M plan may not contain any of the following provisions:

(i) Any averaging among emissions of differing pollutants;

(ii) The inclusion of any affected sources other than emission units in a secondary aluminum processing unit;

(iii) The inclusion of any emission unit while it is shutdown; or

(iv) The inclusion of any periods of startup or shutdown in emission calculations.

(3) To revise the SAPU compliance provisions within the OM&M plan prior to the end of the permit term, the owner or operator must submit a request to the permitting authority for major sources, or the Administrator for area sources containing the information required by paragraph (s)(1) of this section and obtain approval of the permitting authority for major sources, or the Administrator for area sources prior to implementing any revisions.

(t) *Secondary aluminum processing unit.* Except as provided in paragraph (u) of this section, the owner or operator must calculate and record the 3-day, 24-hour rolling average emissions of PM, HCl, and D/F (and HF for uncontrolled group 1 furnaces) for each secondary aluminum processing unit on a daily basis. To calculate the 3-day, 24-hour rolling average, the owner or operator must:

(1) Calculate and record the total weight of material charged to each emission unit in the secondary aluminum processing unit for each 24-hour day of operation using the feed/charge weight information required in paragraph (e) of this section. If the owner or operator chooses to comply on the basis of weight of aluminum produced by the emission unit, rather than weight of material charged to the emission unit, all performance test emissions results and all calculations must be conducted on the aluminum production weight basis.

(2) Multiply the total feed/charge weight to the emission unit, or the

sfrattini on LAPJZKW1R2 with $$_JOB
VerDate Sep<11>2014 09:16 Apr 04, 2023 Jkt 256165 PO 00000 Frm 00087 Fmt 8010 Sfmt 8010 Q:\40\256165.XXX PC31

weight of aluminum produced by the emission unit, for each emission unit for the 24-hour period by the emission rate (in lb/ton of feed/charge) for that emission unit (as determined during the performance test) to provide emissions for each emission unit for the 24-hour period, in pounds.

(i) Where no performance test has been conducted, for a particular emission unit, because the owner of operator has, with the approval of the permitting authority for major sources, or the Administrator for area sources, chosen to determine the emission rate of an emission unit by testing a representative unit, in accordance with § 63.1511(f), the owner or operator shall use the emission rate determined from the representative unit in the SAPU emission rate calculation required in § 63.1510(t)(4).

(ii) Except as provided in paragraph (t)(2)(iii) of this section, if the owner or operator has not conducted performance tests for HCl (and HF for an uncontrolled group 1 furnace) or for HCl for an in-line fluxer, in accordance with the provisions of § 63.1512(d)(3), (e)(3), or (h)(2), the calculation required in § 63.1510(t)(4) to determine SAPU-wide HCl and HF emissions shall be made under the assumption that all chlorine contained in reactive flux added to the emission unit is emitted as HCl and all fluorine contained in reactive flux added to the emission unit is emitted as HF.

(iii) Prior to the date by which the initial performance test for HF emissions from uncontrolled group 1 furnaces is conducted, or is required to be conducted, the calculation required in § 63.1505(k) to determine the SAPU-wide HF emission limit and the calculation required in § 63.1510(t)(4) to determine the SAPU-wide HF emission rate must exclude HF emissions from untested uncontrolled group 1 furnaces and feed/charge processed in untested uncontrolled group 1 furnaces.

(3) Divide the total emissions for each SAPU for the 24-hour period by the total material charged to the SAPU, or the weight of aluminum produced by the SAPU over the 24-hour period to provide the daily emission rate for the SAPU.

(4) Compute the 24-hour daily emission rate using Equation 4:

$$E_{day} = \frac{\sum_{i=1}^{n} \left(T_i \times ER_i \right)}{\sum_{i=1}^{n} T_i} \qquad \text{(Eq. 4)}$$

Where:

E_{day} = The daily PM, HCl, and D/F (and HF for uncontrolled group 1 furnaces) emission rate for the secondary aluminum processing unit for the 24-hour period;

T_i = The total amount of feed, or aluminum produced, for emission unit i for the 24-hour period (tons or Mg);

ER_i = The measured emission rate for emission unit i as determined in the performance test (lb/ton or μg/Mg of feed/charge); and

n = The number of emission units in the secondary aluminum processing unit.

(5) Calculate and record the 3-day, 24-hour rolling average for each pollutant each day by summing the daily emission rates for each pollutant over the 3 most recent consecutive days and dividing by 3. The SAPU is in compliance with an applicable emission limit if the 3-day, 24-hour rolling average for each pollutant is no greater than the applicable SAPU emission limit determined in accordance with § 63.1505(k)(1)–(3).

(u) *Secondary aluminum processing unit compliance by individual emission unit demonstration.* As an alternative to the procedures of paragraph (t) of this section, an owner or operator may demonstrate, through performance tests, that each individual emission unit within the secondary aluminum production unit is in compliance with the applicable emission limits for the emission unit.

sfrattini on LAPJZKW1R2 with $$_JOB
VerDate Sep<11>2014 09:16 Apr 04, 2023 Jkt 256165 PO 00000 Frm 00088 Fmt 8010 Sfmt 8010 Q:\40\256165.XXX PC31
ER18SE15.010</GPH>

(v) *Alternative monitoring method for lime addition*. The owner or operator of a lime-coated fabric filter that employs intermittent or noncontinuous lime addition may apply to the Administrator for approval of an alternative method for monitoring the lime addition schedule and rate based on monitoring the weight of lime added per ton of feed/charge for each operating cycle or time period used in the performance test. An alternative monitoring method will not be approved unless the owner or operator provides assurance through data and information that the affected source will meet the relevant emission standards on a continuous basis.

(w) *Alternative monitoring methods*. If an owner or operator wishes to use an alternative monitoring method to demonstrate compliance with any emission standard in this subpart, other than those alternative monitoring methods which may be authorized pursuant to §63.1510(j)(5) and §63.1510(v), the owner or operator may submit an application to the Administrator. Any such application will be processed according to the criteria and procedures set forth in paragraphs (w)(1) through (6) of this section.

(1) The Administrator will not approve averaging periods other than those specified in this section.

(2) The owner or operator must continue to use the original monitoring requirement until necessary data are submitted and approval is received to use another monitoring procedure.

(3) The owner or operator shall submit the application for approval of alternate monitoring methods no later than the notification of the performance test. The application must contain the information specified in paragraphs (w)(3) (i) through (iii) of this section:

(i) Data or information justifying the request, such as the technical or economic infeasibility, or the impracticality of using the required approach;

(ii) A description of the proposed alternative monitoring requirements, including the operating parameters to be monitored, the monitoring approach and technique, and how the limit is to be calculated; and

(iii) Data and information documenting that the alternative monitoring requirement(s) would provide equivalent or better assurance of compliance with the relevant emission standard(s).

(4) The Administrator will not approve an alternate monitoring application unless it would provide equivalent or better assurance of compliance with the relevant emission standard(s). Before disapproving any alternate monitoring application, the Administrator will provide:

(i) Notice of the information and findings upon which the intended disapproval is based; and

(ii) Notice of opportunity for the owner or operator to present additional supporting information before final action is taken on the application. This notice will specify how much additional time is allowed for the owner or operator to provide additional supporting information.

(5) The owner or operator is responsible for submitting any supporting information in a timely manner to enable the Administrator to consider the application prior to the performance test. Neither submittal of an application nor the Administrator's failure to approve or disapprove the application relieves the owner or operator of the responsibility to comply with any provisions of this subpart.

(6) The Administrator may decide at any time, on a case-by-case basis, that additional or alternative operating limits, or alternative approaches to establishing operating limits, are necessary to demonstrate compliance with the emission standards of this subpart.

[65 FR 15710, Mar. 23, 2000, as amended at 67 FR 59792, Sept. 24, 2002; 67 FR 79816, Dec. 30, 2002; 69 FR 53984, Sept. 3, 2004; 80 FR 56741, Sept. 18, 2015; 81 FR 38087, June 13, 2016]

§63.1511 Performance test/compliance demonstration general requirements.

(a) *Site-specific test plan*. Prior to conducting any performance test required by this subpart, the owner or operator must prepare a site-specific test plan which satisfies all of the rule requirements, and must obtain approval of the plan pursuant to the procedures set forth in §63.7. Performance tests shall be conducted under such conditions as the Administrator specifies to the

sfrattini on LAPJZKW1R2 with $$_JOB
VerDate Sep<11>2014 09:16 Apr 04, 2023 Jkt 256165 PO 00000 Frm 00089 Fmt 8010 Sfmt 8010 Q:\40\256165.XXX PC31

owner or operator based on representative performance of the affected source for the period being tested. Upon request, the owner or operator shall make available to the Administrator such records as may be necessary to determine the conditions of performance tests.

(b) *Initial performance test.* Following approval of the site-specific test plan, the owner or operator must demonstrate initial compliance with each applicable emission, equipment, work practice, or operational standard for each affected source and emission unit, and report the results in the notification of compliance status report as described in § 63.1515(b). The owner or operator of any affected source constructed before February 14, 2012, for which an initial performance test is required to demonstrate compliance must conduct this initial performance test no later than the date for compliance established by § 63.1501. The owner or operator of any affected source constructed or reconstructed after February 14, 2012, for which an initial performance test is required must conduct this initial performance test within 180 days after the date for compliance established by § 63.1501. Except for the date by which the performance test must be conducted, the owner or operator must conduct each performance test in accordance with the requirements and procedures set forth in § 63.7(c). Owners or operators of affected sources located at facilities which are area sources are subject only to those performance testing requirements pertaining to D/F. Owners or operators of sweat furnaces meeting the specifications of § 63.1505(f)(1) are not required to conduct a performance test.

(1) The performance tests must be conducted under representative conditions expected to produce the highest level of HAP emissions expressed in the units of the emission standards for the HAP (considering the extent of feed/charge contamination, reactive flux addition rate and feed/charge rate). If a single test condition is not expected to produce the highest level of emissions for all HAP, testing under two or more sets of conditions (for example high contamination at low feed/charge rate, and low contamination at high feed/charge rate) may be required. Any subsequent performance tests for the purposes of establishing new or revised parametric limits shall be allowed upon pre-approval from the permitting authority for major sources, or the Administrator for area sources. These new parametric settings shall be used to demonstrate compliance for the period being tested.

(2) Each performance test for a continuous process must consist of 3 separate runs; pollutant sampling for each run must be conducted for the time period specified in the applicable method or, in the absence of a specific time period in the test method, for a minimum of 3 hours.

(3) Each performance test for a batch process must consist of three separate runs; pollutant sampling for each run must be conducted over the entire process operating cycle. Additionally, for batch processes where the length of the process operating cycle is not known in advance, and where isokinetic sampling must be conducted based on the procedures in Method 5 in appendix A to part 60, use the following procedure to ensure that sampling is conducted over the entire process operating cycle:

(i) Choose a minimum operating cycle length and begin sampling assuming this minimum length will be the run time (*e.g.*, if the process operating cycle is known to last from four to six hours, then assume a sampling time of four hours and divide the sampling time evenly between the required number of traverse points);

(ii) After each traverse point has been sampled once, begin sampling each point again for the same time per point, in the reverse order, until the operating cycle is complete. All traverse points as required by Method 1 of appendix A to part 60, must be sampled at least once during each test run;

(iii) In order to distribute the sampling time most evenly over all the traverse points, do not perform all runs using the same sampling point order (*e.g.*, if there are four ports and sampling for run 1 began in port 1, then sampling for run 2 could begin in port 4 and continue in reverse order.)

(4) Where multiple affected sources or emission units are exhausted

sfrattini on LAPJZKW1R2 with $$_JOB
VerDate Sep<11>2014 09:16 Apr 04, 2023 Jkt 256165 PO 00000 Frm 00090 Fmt 8010 Sfmt 8010 Q:\40\256165.XXX PC31

through a common stack, pollutant sampling for each run must be conducted over a period of time during which all affected sources or emission units complete at least 1 entire process operating cycle or for 24 hours, whichever is shorter.

(5) Initial compliance with an applicable emission limit or standard is demonstrated if the average of three runs conducted during the performance test is less than or equal to the applicable emission limit or standard.

(6) Apply paragraphs (b)(1) through (5) of this section for each pollutant separately if a different production rate, charge material or, if applicable, reactive fluxing rate would apply and thereby result in a higher expected emissions rate for that pollutant.

(7) The owner or operator may not conduct performance tests during periods of malfunction.

(c) *Test methods.* The owner or operator must use the following methods in appendix A to 40 CFR part 60 to determine compliance with the applicable emission limits or standards:

(1) Method 1 for sample and velocity traverses.

(2) Method 2 for velocity and volumetric flow rate.

(3) Method 3 for gas analysis.

(4) Method 4 for moisture content of the stack gas.

(5) Method 5 for the concentration of PM.

(6) Method 9 for visible emission observations.

(7) Method 23 for the concentration of D/F.

(8) Method 25A for the concentration of THC, as propane.

(9) Method 26A for the concentration of HCl and HF. Method 26 may also be used, except at sources where entrained water droplets are present in the emission stream. Where a lime-injected fabric filter is used as the control device to comply with the 90 percent reduction standard, the owner or operator must measure the fabric filter inlet concentration of HCl at a point before lime is introduced to the system.

(d) *Alternative methods.* The owner or operator may use alternative test methods as provided in paragraphs (d)(1) through (3) of this section.

(1) The owner or operator may use test method ASTM D7520–13 as an alternative to EPA Method 9 subject to conditions described in §63.1510(f)(4).

(2) In lieu of conducting the annual flow rate measurements using Methods 1 and 2, the owner or operator may use Method 204 in Appendix M to 40 CFR part 51 to conduct annual verification of a permanent total enclosure for the affected source/emission unit.

(3) The owner or operator may use an alternative test method approved by the Administrator.

(e) *Repeat tests.* The owner or operator of new or existing affected sources and emission units located at secondary aluminum production facilities that are major sources must conduct a performance test every 5 years following the initial performance test.

(f) *Testing of representative emission units.* With the prior approval of the permitting authority for major sources, or the Administrator for area sources, an owner or operator may utilize emission rates obtained by testing a particular type of group 1 furnace that does not have an add-on air pollution control device, or by testing an in-line flux box that does not have an add-on air pollution control device, to determine the emission rate for other units of the same type at the same facility. Such emission test results may only be considered to be representative of other units if all of the following criteria are satisfied:

(1) The tested emission unit must use feed materials and charge rates which are comparable to the emission units that it represents;

(2) The tested emission unit must use the same type of flux materials in the same proportions as the emission units it represents;

(3) The tested emission unit must be operated utilizing the same work practices as the emission units that it represents;

(4) The tested emission unit must be of the same design as the emission units that it represents; and

(5) The tested emission unit must be tested under the highest load or capacity reasonably expected to occur for any of the emission units that it represents.

sfrattini on LAPJZKW1R2 with $$_JOB
VerDate Sep<11>2014 09:16 Apr 04, 2023 Jkt 256165 PO 00000 Frm 00091 Fmt 8010 Sfmt 8010 Q:\40\256165.XXX PC31

(6) All 3 separate runs of a performance test must be conducted on the same emission unit.

(g) *Establishment of monitoring and operating parameter values.* The owner or operator of new or existing affected sources and emission units must establish a minimum or maximum operating parameter value, or an operating parameter range for each parameter to be monitored as required by § 63.1510 that ensures compliance with the applicable emission limit or standard. To establish the minimum or maximum value or range, the owner or operator must use the appropriate procedures in this section and submit the information required by § 63.1515(b)(4) in the notification of compliance status report. The owner or operator may use existing data in addition to the results of performance tests to establish operating parameter values for compliance monitoring provided each of the following conditions are met to the satisfaction of the permitting authority for major sources, or the Administrator for area sources:

(1) The complete emission test report(s) used as the basis of the parameter(s) is submitted.

(2) The same test methods and procedures as required by this subpart were used in the test.

(3) The owner or operator certifies that no design or work practice changes have been made to the source, process, or emission control equipment since the time of the report.

(4) All process and control equipment operating parameters required to be monitored were monitored as required in this subpart and documented in the test report.

(5) If the owner or operator wants to conduct a new performance test and establish different operating parameter values, they must submit a revised site specific test plan and receive approval in accordance with paragraph (a) of this section. In addition, if an owner or operator wants to use existing data in addition to the results of the new performance test to establish operating parameter values, they must meet the requirements in paragraphs (g)(1) through (4) of this section.

(h) *Testing of commonly-ducted units within a secondary aluminum processing unit.* When group 1 furnaces and/or in-line fluxers are included in a single existing SAPU or new SAPU, and the emissions from more than one emission unit within that existing SAPU or new SAPU are manifolded to a single control device, compliance for all units within the SAPU is demonstrated if the total measured emissions from all controlled and uncontrolled units in the SAPU do not exceed the emission limits calculated for that SAPU based on the applicable equation in § 63.1505(k).

(i) *Testing of commonly-ducted units not within a secondary aluminum processing unit.* With the prior approval of the permitting authority for major sources, or the Administrator for area sources, an owner or operator may do combined performance testing of two or more individual affected sources or emission units which are not included in a single existing SAPU or new SAPU, but whose emissions are manifolded to a single control device. Any such performance testing of commonly-ducted units must satisfy the following basic requirements:

(1) All testing must be designed to verify that each affected source or emission unit individually satisfies all emission requirements applicable to that affected source or emission unit;

(2) All emissions of pollutants subject to a standard must be tested at the outlet from each individual affected source or emission unit while operating under the highest load or capacity reasonably expected to occur, and prior to the point that the emissions are manifolded together with emissions from other affected sources or emission units;

(3) The combined emissions from all affected sources and emission units which are manifolded to a single emission control device must be tested at the outlet of the emission control device;

(4) All tests at the outlet of the emission control device must be conducted with all affected sources and emission units whose emissions are manifolded to the control device operating simultaneously under the highest load or capacity reasonably expected to occur; and

sfrattini on LAPJZKW1R2 with $$_JOB
VerDate Sep<11>2014 09:16 Apr 04, 2023 Jkt 256165 PO 00000 Frm 00092 Fmt 8010 Sfmt 8010 Q:\40\256165.XXX PC31

(5) For purposes of demonstrating compliance of a commonly-ducted unit with any emission limit for a particular type of pollutant, the emissions of that pollutant by the individual unit shall be presumed to be controlled by the same percentage as total emissions of that pollutant from all commonly-ducted units are controlled at the outlet of the emission control device.

[65 FR 15710, Mar. 23, 2000, as amended at 67 FR 59792, Sept. 24, 2002; 67 FR 79817, Dec. 30, 2002; 79 FR 11284, Feb. 27, 2014; 80 FR 56745, Sept. 18, 2015; 81 FR 38087, June 13, 2016]

§63.1512 Performance test/compliance demonstration requirements and procedures.

(a) *Aluminum scrap shredder*. The owner or operator must conduct performance tests to measure PM emissions at the outlet of the control system. If visible emission observation is the selected monitoring option, the owner or operator must record visible emission observations from each exhaust stack for all consecutive 6-minute periods during the PM emission test according to the requirements of Method 9 in appendix A to 40 CFR part 60. If emissions observations by ASTM Method D7520–13 (incorporated by reference, see §63.14) is the selected monitoring option, the owner or operator must record opacity observations from each exhaust stack for all consecutive 6-minute periods during the PM emission test.

(b) *Thermal chip dryer*. The owner or operator must conduct a performance test to measure THC and D/F emissions at the outlet of the control device while the unit processes only unpainted aluminum chips.

(c) *Scrap dryer/delacquering kiln/decoating kiln*. The owner or operator must conduct performance tests to measure emissions of THC, D/F, HCl, and PM at the outlet of the control device.

(1) If the scrap dryer/delacquering kiln/decoating kiln is subject to the alternative emission limits in §63.1505(e), the average afterburner operating temperature in each 3-hour block period must be maintained at or above 760 °C (1400 °F) for the test.

(2) The owner or operator of a scrap dryer/delacquering kiln/decoating kiln subject to the alternative limits in §63.1505(e) must submit a written certification in the notification of compliance status report containing the information required by §63.1515(b)(7).

(d) *Group 1 furnace with add-on air pollution control devices*. (1) The owner or operator of a group 1 furnace that processes scrap other than clean charge materials with emissions controlled by a lime-injected fabric filter must conduct performance tests to measure emissions of PM and D/F at the outlet of the control device and emissions of HCl at the outlet (for the emission limit) or the inlet and the outlet (for the percent reduction standard).

(2) The owner or operator of a group 1 furnace that processes only clean charge materials with emissions controlled by a lime-injected fabric filter must conduct performance tests to measure emissions of PM at the outlet of the control device and emissions of HCl at the outlet (for the emission limit) or the inlet and the outlet (for the percent reduction standard).

(3) The owner or operator may choose to determine the rate of reactive flux addition to the group 1 furnace and assume, for the purposes of demonstrating compliance with the SAPU emission limit, that all reactive flux added to the group 1 furnace is emitted. Under these circumstances, the owner or operator is not required to conduct an emission test for HCl.

(4) The owner or operator of a sidewell group 1 furnace that conducts reactive fluxing (except for cover flux) in the hearth, or that conducts reactive fluxing in the sidewell at times when the level of molten metal falls below the top of the passage between the sidewell and the hearth, must conduct the performance tests required by paragraph (d)(1) or (d)(2) of this section, to measure emissions from both the sidewell and the hearth.

(e) *Group 1 furnace (including melting holding furnaces) without add-on air pollution control devices*. In the site-specific monitoring plan required by §63.1510(o), the owner or operator of a group 1 furnace (including a melting/holding furnaces) without add-on air pollution control devices must include data and information demonstrating

sfrattini on LAPJZKW1R2 with $$_JOB
VerDate Sep<11>2014 09:16 Apr 04, 2023 Jkt 256165 PO 00000 Frm 00093 Fmt 8010 Sfmt 8010 Q:\40\256165.XXX PC31

compliance with the applicable emission limits.

(1) If the group 1 furnace processes other than clean charge material, the owner or operator must conduct emission tests to measure emissions of PM, HCl, HF, and D/F at the furnace exhaust outlet.

(2) If the group 1 furnace processes only clean charge, the owner or operator must conduct emission tests to simultaneously measure emissions of PM, HCl and HF. A D/F test is not required. Each test must be conducted while the group 1 furnace (including a melting/holding furnace) processes only clean charge.

(3) The owner or operator may choose to determine the rate of reactive flux addition to the group 1 furnace and assume, for the purposes of demonstrating compliance with the SAPU emission limit, that all chlorine and fluorine contained in reactive flux added to the group 1 furnace is emitted as HCl and HF. Under these circumstances, the owner or operator is not required to conduct an emission test for HCl or HF.

(4) When testing an existing uncontrolled furnace, the owner or operator must comply with the requirements of either paragraphs (e)(4)(i), (ii), or (iii) of this section at the next required performance test required by § 63.1511(e).

(i) Install hooding that meets ACGIH Guidelines (incorporated by reference, see § 63.14), or

(ii) At least 180 days prior to testing petition the permitting authority for major sources, or the Administrator for area sources, that such hoods are impractical under the provisions of paragraph (e)(6) of this section and propose testing procedures that will minimize unmeasured emissions during the performance test according to the paragraph (e)(7) of this section, or

(iii) Assume an 80-percent capture efficiency for the furnace exhaust (i.e., multiply emissions measured at the furnace exhaust outlet by 1.25). If the source fails to demonstrate compliance using the 80-percent capture efficiency assumption, the owner or operator must re-test with a hood that meets the ACGIH Guidelines within 180 days, or petition the permitting authority for major sources, or the Administrator for area sources, within 180 days that such hoods are impractical under the provisions of paragraph (e)(6) of this section and propose testing procedures that will minimize unmeasured emissions during the performance test according to paragraph (e)(7) of this section.

(iv) The 80-percent capture efficiency assumption is not applicable in the event of testing conducted under an approved petition submitted pursuant to paragraphs (e)(4)(ii) or (iii) of this section.

(v) Round top furnaces constructed before February 14, 2012, and reconstructed round top furnaces are exempt from the requirements of paragraphs (e)(4)(i), (ii), and (iii) of this section. Round top furnaces must be operated to minimize unmeasured emissions according to paragraph (e)(7) of this section.

(5) When testing a new uncontrolled furnace, other than a new round top furnace, constructed after February 14, 2012, the owner or operator must comply with the requirements of paragraph (e)(5)(i) or (ii) of this section at the next required performance test required by § 63.1511(e). When testing a new round top furnace constructed after February 14, 2012, the owner or operator must comply with the requirements of either paragraphs (e)(5)(i), (ii), or (iii) of this section at the next required performance test required by § 63.1511(e).

(i) Install hooding that meets ACGIH Guidelines (incorporated by reference, see § 63.14), or

(ii) At least 180 days prior to testing petition the permitting authority for major sources, or the Administrator for area sources, that such hoods are impractical under the provisions of paragraph (e)(6) of this section and propose testing procedures that will minimize unmeasured emissions during the performance test according to the paragraph (e)(7) of this section, or

(iii) Assume an 80-percent capture efficiency for the furnace exhaust (*i.e.*, multiply emissions measured at the furnace exhaust outlet by 1.25). If the source fails to demonstrate compliance using the 80-percent capture efficiency assumption, the owner or operator must re-test with a hood that meets

sfrattini on LAPJZKW1R2 with $$_JOB
VerDate Sep<11>2014 09:16 Apr 04, 2023 Jkt 256165 PO 00000 Frm 00094 Fmt 8010 Sfmt 8010 Q:\40\256165.XXX PC31

the ACGIH Guidelines within 180 days, or petition the permitting authority for major sources, or the Administrator for area sources, within 180 days that such hoods are impractical under the provisions of paragraph (e)(6) of this section and propose testing procedures that will minimize unmeasured emissions during the performance test according to paragraph (e)(7) of this section.

(iv) The 80-percent capture efficiency assumption is not applicable in the event of testing conducted under an approved petition submitted pursuant to paragraphs (e)(5)(ii) or (iii) of this section.

(6) The installation of hooding that meets ACGIH Guidelines (incorporated by reference, see §63.14) is considered impractical if any of the following conditions exist:

(i) Building or equipment obstructions (for example, wall, ceiling, roof, structural beams, utilities, overhead crane or other obstructions) are present such that the temporary hood cannot be located consistent with acceptable hood design and installation practices;

(ii) Space limitations or work area constraints exist such that the temporary hood cannot be supported or located to prevent interference with normal furnace operations or avoid unsafe working conditions for the furnace operator; or

(iii) Other obstructions and limitations subject to agreement of the permitting authority for major sources, or the Administrator for area sources.

(7) Testing procedures that will minimize unmeasured emissions may include, but are not limited to the following:

(i) Installing a hood that does not entirely meet ACGIH guidelines;

(ii) Using the building as an enclosure, and measuring emissions exhausted from the building if there are no other furnaces or other significant sources in the building of the pollutants to be measured;

(iii) Installing temporary baffles on those sides or top of furnace opening if it is practical to do so where they will not interfere with material handling or with the furnace door opening and closing;

(iv) Minimizing the time the furnace doors are open or the top is off;

(v) Delaying gaseous reactive fluxing until charging doors are closed and, for round top furnaces, until the top is on;

(vi) Agitating or stirring molten metal as soon as practicable after salt flux addition and closing doors as soon as possible after solid fluxing operations, including mixing and dross removal;

(vii) Keeping building doors and other openings closed to the greatest extent possible to minimize drafts that would divert emissions from being drawn into the furnace;

(viii) Maintaining burners on low-fire or pilot operation while the doors are open or the top is off;

(ix) Use of fans or other device to direct flow into a furnace when door is open; or

(x) Removing the furnace cover one time in order to add a smaller but representative charge and then replacing the cover.

(f) *Sweat furnace.* Except as provided in §63.1505(f)(1), the owner or operator must measure emissions of D/F from each sweat furnace at the outlet of the control device.

(g) *Dross-only furnace.* The owner or operator must conduct a performance test to measure emissions of PM from each dross-only furnace at the outlet of each control device while the unit processes only dross and salt flux as the sole feedstock.

(h) *In-line fluxer.* (1) The owner or operator of an in-line fluxer that uses reactive flux materials must conduct a performance test to measure emissions of HCl and PM or otherwise demonstrate compliance in accordance with paragraph (h)(2) of this section. If the in-line fluxer is equipped with an add-on control device, the emissions must be measured at the outlet of the control device.

(2) The owner or operator may choose to limit the rate at which reactive flux is added to an in-line fluxer and assume, for the purposes of demonstrating compliance with the SAPU emission limit, that all chlorine in the reactive flux added to the in-line fluxer is emitted as HCl. Under these circumstances, the owner or operator is not required to conduct an emission

sfrattini on LAPJZKW1R2 with $$_JOB
VerDate Sep<11>2014 09:16 Apr 04, 2023 Jkt 256165 PO 00000 Frm 00095 Fmt 8010 Sfmt 8010 Q:\40\256165.XXX PC31

test for HCl. If the owner or operator of any in-line flux box that has no ventilation ductwork manifolded to any outlet or emission control device chooses to demonstrate compliance with the emission limits for HCl by limiting use of reactive flux and assuming that all chlorine in the flux is emitted as HCl, compliance with the HCl limit shall also constitute compliance with the emission limit for PM and no separate emission test for PM is required. In this case, the owner or operator of the unvented in-line flux box must use the maximum permissible PM emission rate for the in-line flux boxes when determining the total emissions for any SAPU which includes the flux box.

(i) *Rotary dross cooler*. The owner or operator must conduct a performance test to measure PM emissions at the outlet of the control device.

(j) *Secondary aluminum processing unit*. The owner or operator must conduct performance tests as described in paragraphs (j)(1) through (3) of this section. The results of the performance tests are used to establish emission rates in lb/ton of feed/charge for PM, HCl and HF and μg TEQ/Mg of feed/charge for D/F emissions from each emission unit. These emission rates are used for compliance monitoring in the calculation of the 3-day, 24-hour rolling average emission rates using the equation in § 63.1510(t). A performance test is required for:

(1) Each group 1 furnace processing only clean charge to measure emissions of PM and either:

(i) Emissions of HF and HCl (for determining the emission limit); or

(ii) The mass flow rate of HCl at the inlet to and outlet from the control device (for the percent reduction standard).

(2) Each group 1 furnace that processes scrap other than clean charge to measure emissions of PM and D/F and either:

(i) Emissions of HF and HCl (for determining the emission limit); or

(ii) The mass flow rate of HCl at the inlet to and outlet from the control device (for the percent reduction standard).

(3) Each in-line fluxer to measure emissions of PM and HCl.

(k) *Feed/charge weight measurement*. During the emission test(s) conducted to determine compliance with emission limits in a kg/Mg (lb/ton) format, the owner or operator of an affected source or emission unit, subject to an emission limit in a kg/Mg (lb/ton) of feed/charge format, must measure (or otherwise determine) and record the total weight of feed/charge to the affected source or emission unit for each of the three test runs and calculate and record the total weight. An owner or operator that chooses to demonstrate compliance on the basis of the aluminum production weight must measure the weight of aluminum produced by the emission unit or affected source instead of the feed/charge weight.

(l) *Continuous opacity monitoring system*. The owner or operator of an affected source or emission unit using a continuous opacity monitoring system must conduct a performance evaluation to demonstrate compliance with Performance Specification 1 in appendix B to 40 CFR part 60. Following the performance evaluation, the owner or operator must measure and record the opacity of emissions from each exhaust stack for all consecutive 6-minute periods during the PM emission test.

(m) *Afterburner*. These requirements apply to the owner or operator of an affected source using an afterburner to comply with the requirements of this subpart.

(1) Prior to the initial performance test, the owner or operator must conduct a performance evaluation for the temperature monitoring device according to the requirements of § 63.8.

(2) The owner or operator must use these procedures to establish an operating parameter value or range for the afterburner operating temperature.

(i) Continuously measure and record the operating temperature of each afterburner every 15 minutes during the THC and D/F performance tests;

(ii) Determine and record the 15-minute block average temperatures for the three test runs; and

(iii) Determine and record the 3-hour block average temperature measurements for the 3 test runs.

(n) *Inlet gas temperature*. The owner or operator of a scrap dryer/delacquering kiln/decoating kiln or a group 1 furnace

sfrattini on LAPJZKW1R2 with $$_JOB
VerDate Sep<11>2014 09:16 Apr 04, 2023 Jkt 256165 PO 00000 Frm 00096 Fmt 8010 Sfmt 8010 Q:\40\256165.XXX PC31

using a lime-injected fabric filter must use these procedures to establish an operating parameter value or range for the inlet gas temperature.

(1) Continuously measure and record the temperature at the inlet to the lime-injected fabric filter every 15 minutes during the HCl and D/F performance tests;

(2) Determine and record the 15-minute block average temperatures for the 3 test runs; and

(3) Determine and record the 3-hour block average of the recorded temperature measurements for the 3 test runs.

(o) *Flux injection rate*. The owner or operator must use these procedures to establish an operating parameter value or range for the total reactive chlorine flux injection rate and, for uncontrolled furnaces, the total reactive fluorine flux injection rate.

(1) Continuously measure and record the weight of gaseous or liquid reactive flux injected for each 15 minute period during the HCl, HF and D/F tests, determine and record the 15-minute block average weights, and calculate and record the total weight of the gaseous or liquid reactive flux for the 3 test runs;

(2) Record the identity, composition, and total weight of each addition of solid reactive flux for the 3 test runs;

(3) Determine the total reactive chlorine flux injection rate and, for uncontrolled furnaces, the total reactive fluorine flux injection rate by adding the recorded measurement of the total weight of chlorine and, for uncontrolled furnaces, fluorine in the gaseous or liquid reactive flux injected and the total weight of chlorine and, for uncontrolled furnaces, fluorine in the solid reactive flux using Equation 5:

$$W_t = F_1 W_1 + F_2 W_2 \qquad \text{(Eq. 5)}$$

Where:

W_t = Total chlorine or fluorine usage, by weight;

F_1 = Fraction of gaseous or liquid flux that is chlorine or fluorine;

W_1 = Weight of reactive flux gas injected;

F_2 = Fraction of solid reactive chloride flux that is chlorine (*e.g.*, F = 0.75 for magnesium chloride) or fraction of solid reactive fluoride flux that is fluorine (*e.g.*, F = 0.33 for potassium fluoride); and

W_2 = Weight of solid reactive flux;

(4) Divide the weight of total chlorine or fluorine usage (W_t) for the 3 test runs by the recorded measurement of the total weight of feed for the 3 test runs; and

(5) If a solid reactive flux other than magnesium chloride or potassium fluoride is used, the owner or operator must derive the appropriate proportion factor subject to approval by the permitting authority for major sources, or the Administrator for area sources.

(p) *Lime injection*. The owner or operator of an affected source or emission unit using a lime-injected fabric filter system must use these procedures during the HCl and D/F tests to establish an operating parameter value for the feeder setting for each operating cycle or time period used in the performance test.

(1) For continuous lime injection systems, ensure that lime in the feed hopper or silo is free-flowing at all times; and

(2) Record the feeder setting and lime injection rate for the 3 test runs. If the feed rate setting and lime injection rates vary between the runs, determine and record the average feed rate and lime injection rate from the 3 runs.

(q) *Bag leak detection system*. The owner or operator of an affected source or emission unit using a bag leak detection system must submit the information described in §63.1515(b)(6) as part of the notification of compliance status report to document conformance with the specifications and requirements in §63.1510(f).

(r) *Labeling*. The owner or operator of each scrap dryer/delacquering kiln/decoating kiln, group 1 furnace, group 2 furnace and in-line fluxer must submit the information described in §63.1515(b)(3) as part of the notification

sfrattini on LAPJZKW1R2 with $$_JOB
VerDate Sep<11>2014 09:16 Apr 04, 2023 Jkt 256165 PO 00000 Frm 00097 Fmt 8010 Sfmt 8010 Q:\40\256165.XXX PC31
ER18SE15.011</GPH>

of compliance status report to document conformance with the operational standard in § 63.1506(b).

(s) *Capture/collection system.* The owner or operator of a new or existing affected source or emission unit with an add-on control device must submit the information described in § 63.1515(b)(2) as part of the notification of compliance status report to document conformance with the operational standard in § 63.1506(c).

[65 FR 15710, Mar. 23, 2000, as amended at 67 FR 79817, Dec. 30, 2002; 69 FR 53984, Sept. 3, 2004; 80 FR 56746, Sept. 18, 2015; 81 FR 38087, June 13, 2016]

§ 63.1513 Equations for determining compliance.

(a) *THC emission limit.* Use Equation 6 to determine compliance with an emission limit for THC:

$$E = \frac{C \times MW \times Q \times K_1 \times K_2}{M_V \times P \times 10^6} \qquad \text{(Eq. 6)}$$

Where,

E = Emission rate of measured pollutant, kg/Mg (lb/ton) of feed;
C = Measured volume fraction of pollutant, ppmv;
MW = Molecular weight of measured pollutant, g/g-mole (lb/lb-mole): THC (as propane) = 44.11;
Q = Volumetric flow rate of exhaust gases, dscm/hr (dscf/hr);
K_1 = Conversion factor, 1 kg/1,000 g (1 lb/lb);
K_2 = Conversion factor, 1,000 L/m³ (1 ft³/ft³);
M_v = Molar volume, 24.45 L/g-mole (385.3 ft³/lb-mole); and
P = Production rate, Mg/hr (ton/hr).

(b) *PM, HCl, HF and D/F emission limits.* (1) Use Equation 7 of this section to determine compliance with an emission limit for PM, HCl or HF:

$$E = \frac{C \times Q \times K_1}{P} \qquad \text{(Eq. 7)}$$

Where:

E = Emission rate of PM, HCl or HF, in kg/Mg (lb/ton) of feed;
C = Concentration of PM, HCl or HF, in g/dscm (gr/dscf);
Q = Volumetric flow rate of exhaust gases, in dscm/hr (dscf/hr);
K_1 = Conversion factor, 1 kg/1,000 g (1 lb/7,000 gr); and
P = Production rate, in Mg/hr (ton/hr).

(2) Use Equation 7A of this section to determine compliance with an emission limit for D/F:

$$E = \frac{C \times Q}{P} \qquad \text{(Eq. 7A)}$$

Where:

E = Emission rate of D/F, μg/Mg (gr/ton) of feed;
C = Concentration of D/F, μg/dscm (gr/dscf);
Q = Volumetric flow rate of exhaust gases, dscm/hr (dscf/hr); and
P = Production rate, Mg/hr (ton/hr).

(c) *HCl percent reduction standard.* Use Equation 8 to determine compliance with an HCl percent reduction standard:

$$\%R = \frac{L_i - L_o}{L_i} \times 100 \qquad \text{(Eq. 8)}$$

Where,

%R = Percent reduction of the control device;
L_i = Inlet loading of pollutant, kg/Mg (lb/ton); and
L_o = Outlet loading of pollutant, kg/Mg (lb/ton).

(d) *Conversion of D/F measurements to TEQ units.* To convert D/F measurements to TEQ units, the owner or operator must use the procedures and equations in *Interim Procedures for Estimating Risks Associated with Exposures to Mixtures of Chlorinated Dibenzo-p-Dioxins and -Dibenzofurans (CDDs and CDFs) and 1989 Update*, incorporated by reference see § 63.14.

(e) *Secondary aluminum processing unit.* Use the procedures in paragraphs (e)(1), (2), and (3) or the procedure in paragraph (e)(4) of this section to determine compliance with emission limits for a secondary aluminum processing unit.

sfrattini on LAPJZKW1R2 with $$_JOB
VerDate Sep<11>2014 09:16 Apr 04, 2023 Jkt 256165 PO 00000 Frm 00098 Fmt 8010 Sfmt 8010 Q:\40\256165.XXX PC31
ER23MR00.004</MATH> ER18SE15.012</GPH> ER03SE04.019</MATH> ER23MR00.005</MATH>

(1) Use Equation 9 to compute the mass-weighted PM emissions for a secondary aluminum processing unit. Compliance is achieved if the mass-weighted emissions for the secondary aluminum processing unit (E_{cPM}) is less than or equal to the emission limit for the secondary aluminum processing unit (L_{cPM}) calculated using Equation 1 in §63.1505(k).

$$E_{C_{PM}} = \frac{\sum_{i=1}^{n}\left(E_{ti_{PM}} \times T_{ti}\right)}{\sum_{i=1}^{n}\left(T_{ti}\right)} \qquad \text{(Eq. 9)}$$

Where:

E_{cPM} = The mass-weighted PM emissions for the secondary aluminum processing unit;

E_{tiPM} = Measured PM emissions for individual emission unit, or group of co-controlled emission units, i;

T_{ti} = The average feed rate for individual emission unit i during the operating cycle or performance test period, or the sum of the average feed rates for all emission units in the group of co-controlled emission units i; and

n = The number of emission units, and groups of co-controlled emission units in the secondary aluminum processing unit.

(2) Use Equation 10 to compute the aluminum mass-weighted HCl or HF emissions for the secondary aluminum processing unit. Compliance is achieved if the mass-weighted emissions for the secondary aluminum processing unit ($E_{cHCl/HF}$) is less than or equal to the emission limit for the secondary aluminum processing unit ($L_{cHCl/HF}$) calculated using Equation 2 in §63.1505(k).

$$E_{C_{HCl/HF}} = \frac{\sum_{i=1}^{n}\left(E_{ti_{HCl/HF}} \times T_{ti}\right)}{\sum_{i=1}^{n}\left(T_{ti}\right)} \qquad \text{(Eq. 10)}$$

Where:

$E_{cHCl/HF}$ = The mass-weighted HCl or HF emissions for the secondary aluminum processing unit; and

$E_{tiHCl/HF}$ = Measured HCl or HF emissions for individual emission unit, or group of co-controlled emission units i.

(3) Use Equation 11 to compute the aluminum mass-weighted D/F emissions for the secondary aluminum processing unit. Compliance is achieved if the mass-weighted emissions for the secondary aluminum processing unit is less than or equal to the emission limit for the secondary aluminum processing unit ($L_{cD/F}$) calculated using Equation 3 in §63.1505(k).

$$E_{C_{D/F}} = \frac{\sum_{i=1}^{n}\left(E_{ti_{D/F}} \times T_{ti}\right)}{\sum_{i=1}^{n}\left(T_{ti}\right)} \qquad \text{(Eq. 11)}$$

sfrattini on LAPJZKW1R2 with $$_JOB
VerDate Sep<11>2014 09:16 Apr 04, 2023 Jkt 256165 PO 00000 Frm 00099 Fmt 8010 Sfmt 8006 Q:\40\256165.XXX PC31
ER18SE15.013</GPH> ER18SE15.014</GPH> ER18SE15.015</GPH>

Where:

$E_{cD/F}$ = The mass-weighted D/F emissions for the secondary aluminum processing unit; and

$E_{tiD/F}$ = Measured D/F emissions for individual emission unit, or group of co-controlled emission units i.

(4) As an alternative to using the equations in paragraphs (e)(1), (2), and (3) of this section, the owner or operator may demonstrate compliance for a secondary aluminum processing unit by demonstrating that each existing group 1 furnace is in compliance with the emission limits for a new group 1 furnace in § 63.1505(i) and that each existing in-line fluxer is in compliance with the emission limits for a new in-line fluxer in § 63.1505(j).

(f) *Periods of startup and shutdown.* For a new or existing affected source, or a new or existing emission unit subject to an emissions limit in paragraphs § 63.1505(b) through (j) expressed in units of pounds per ton of feed/charge, or μg TEQ or ng TEQ per Mg of feed/charge, demonstrate compliance during periods of startup and shutdown in accordance with paragraph (f)(1) of this section or determine your emissions per unit of feed/charge during periods of startup and shutdown in accordance with paragraph (f)(2) of this section. Startup and shutdown emissions for group 1 furnaces and in-line fluxers must be calculated individually, and not on the basis of a SAPU. Periods of startup and shutdown are excluded from the calculation of SAPU emission limits in § 63.1505(k), the SAPU monitoring requirements in § 63.1510(t) and the SAPU emissions calculations in § 63.1513(e).

(1) For periods of startup and shutdown, records establishing a feed/charge rate of zero, a flux rate of zero, and that the affected source or emission unit was either heated with electricity, propane or natural gas as the sole sources of heat or was not heated, may be used to demonstrate compliance with the emission limit, or

(2) For periods of startup and shutdown, divide your measured emissions in lb/hr or μg/hr or ng/hr by the feed/charge rate in tons/hr or Mg/hr from your most recent performance test associated with a production rate greater than zero, or the rated capacity of the affected source if no prior performance test data are available.

[65 FR 15710, Mar. 23, 2000, as amended at 69 FR 53984, Sept. 3, 2004; 80 FR 56748, Sept. 18, 2015; 81 FR 38088, June 13, 2016]

§ 63.1514 Change of furnace classification.

The requirements of this section are in addition to the other requirements of this subpart that apply to group 1 and group 2 furnaces.

(a) *Changing from a group 1 controlled furnace processing other than clean charge to group 1 uncontrolled furnace processing other than clean charge.* An owner or operator wishing to change operating modes must conduct performance tests in accordance with §§ 63.1511 and 63.1512 to demonstrate to the permitting authority for major sources, or the Administrator for area sources that compliance can be achieved under both modes. Operating parameters relevant to each mode of operation must be established during the performance test.

(1) Operators of major sources must conduct performance tests for PM, HCl and D/F, according to the procedures in § 63.1512(d) with the capture system and control device operating normally if compliance has not been previously demonstrated in this operating mode. Performance tests must be repeated at least once every 5 years to demonstrate compliance for each operating mode.

(i) Testing under this paragraph must be conducted in accordance with § 63.1511(b)(1) in the controlled mode.

(ii) Operating parameters must be established during these tests, as required by § 63.1511(g).

(iii) The emission factors for this mode of operation for use in the demonstration of compliance with the emission limits for SAPUs specified in § 63.1505(k) must be determined.

(2) Operators of major sources must conduct performance tests for PM, HCl, HF and D/F, according to the procedures in § 63.1512(e) without operating a control device if compliance has not been previously demonstrated for this operating mode. Performance tests must be repeated at least once every 5 years to demonstrate compliance for each operating mode.

sfrattini on LAPJZKW1R2 with $$_JOB
VerDate Sep<11>2014 09:16 Apr 04, 2023 Jkt 256165 PO 00000 Frm 00100 Fmt 8010 Sfmt 8010 Q:\40\256165.XXX PC31

(i) Testing under this paragraph must be conducted in accordance with §63.1511(b)(1) in the uncontrolled mode.

(ii) Testing under this paragraph must be conducted with furnace emissions captured in accordance with the provisions of §63.1506(c) and directed to the stack or vent tested.

(iii) Operating parameters representing uncontrolled operation must be established during these tests, as required by §63.1511(g). For furnaces in batch (cyclic) operation, the number of tap-to-tap cycles (including zero, if none) elapsed using the feed/charge type, feed/charge rate and flux rate must be established as a parameter to be met before changing to uncontrolled mode. For furnaces in continuous (non-cyclic) operation, the time period elapsed (including no time, if none) using the feed/charge type, feed/charge rate and flux rate must be established as a parameter to be met before changing to uncontrolled mode.

(iv) The emission factors for this mode of operation for use in the demonstration of compliance with the emission limits for SAPUs specified in §63.1505(k) must be determined.

(3) Operators of area sources must conduct performance tests for D/F, according to the procedures in §63.1512(d) with the capture system and control device operating normally, if compliance has not been previously demonstrated for this operating mode.

(i) Testing under this paragraph must be conducted in accordance with §63.1511(b)(1) in the controlled mode.

(ii) Operating parameters must be established during these tests, as required by §63.1511(g).

(iii) The D/F emission factor for this mode of operation for use in the demonstration of compliance with the emission limits for SAPUs specified in §63.1505(k) must be determined.

(4) Operators of area sources must conduct performance tests for D/F, according to the procedures in §63.1512(e) without operating a control device, if compliance has not been previously demonstrated for this operating mode.

(i) Testing under this paragraph must be conducted in accordance with §63.1511(b)(1).

(ii) Testing under this paragraph must be conducted with furnace emissions captured in accordance with the provisions of §63.1506(c) and directed to the stack or vent tested.

(iii) Operating parameters representing uncontrolled operation must be established during these tests, as required by §63.1511(g). For furnaces in batch (cyclic) operation, the number of tap-to-tap cycles (including zero, if none) elapsed using the feed/charge type, feed/charge rate and flux rate must be established as a parameter to be met before changing to uncontrolled mode. For furnaces in continuous (non-cyclic) operation, the time period elapsed (including no time, if none) using the feed/charge type, feed/charge rate and flux rate must be established as a parameter to be met before changing to uncontrolled mode.

(iv) The D/F emission factor for this mode of operation for use in the demonstration of compliance with the emission limits for SAPUs specified in §63.1505(k) must be determined.

(5) To change modes of operation from uncontrolled to controlled, the owner or operator must perform the following, before charging scrap to the furnace that exceeds the contaminant level established for uncontrolled mode:

(i) Change the label on the furnace to reflect controlled operation;

(ii) Direct the furnace emissions to the control device;

(iii) Turn on the control device and begin lime addition to the control device at the rate established for controlled mode; and

(iv) Ensure the control device is operating properly.

(6) To change modes of operation from controlled to uncontrolled, the owner or operator must perform the following, before turning off or bypassing the control device:

(i) Change the label on the furnace to reflect uncontrolled operation;

(ii) Charge scrap with a level of contamination no greater than that used in the performance test for uncontrolled furnaces for the number of tap-to-tap cycles that elapsed (or, for continuously operated furnaces, the time elapsed) before the uncontrolled mode performance test was conducted; and

(iii) Decrease the flux addition rate to no higher than the flux addition rate

sfrattini on LAPJZKW1R2 with $$_JOB
VerDate Sep<11>2014 09:16 Apr 04, 2023 Jkt 256165 PO 00000 Frm 00101 Fmt 8010 Sfmt 8010 Q:\40\256165.XXX PC31

used in the uncontrolled mode performance test.

(7) In addition to the recordkeeping requirements of § 63.1517, the owner or operator must maintain records of the nature of each mode change (controlled to uncontrolled, or uncontrolled to controlled), the time the change is initiated, and the time the exhaust gas is diverted from control device to bypass or bypass to control device.

(b) *Changing from a group 1 controlled furnace processing other than clean charge to a group 1 uncontrolled furnace processing clean charge.* An owner or operator wishing to change operating modes must conduct performance tests in accordance with §§ 63.1511 and 63.1512 to demonstrate to the permitting authority for major sources, or the Administrator for area sources that compliance can be achieved in both modes. Operating parameters relevant to each mode of operation must be established during the performance test.

(1) Operators of major sources must conduct performance tests for PM, HCl and D/F, according to the procedures in § 63.1512(d) with the capture system and control device operating normally if compliance has not been previously demonstrated in this operating mode. Performance tests must be repeated at least once every 5 years to demonstrate compliance for each operating mode.

(i) Testing under this paragraph must be conducted in accordance with § 63.1511(b)(1) in the controlled mode.

(ii) Operating parameters must be established during these tests, as required by § 63.1511(g).

(iii) The emission factors for this mode of operation for use in the demonstration of compliance with the emission limits for SAPUs specified in § 63.1505(k) must be determined.

(2) Operators of major sources must conduct performance tests for PM, HCl, HF and D/F, according to the procedures in § 63.1512(e) without operating a control device if compliance has not been previously demonstrated for this operating mode. Performance tests must be repeated at least once every 5 years to demonstrate compliance for each operating mode.

(i) Testing under this paragraph may be conducted at any time after operation with clean charge has commenced.

(ii) Testing under this paragraph must be conducted with furnace emissions captured in accordance with the provisions of § 63.1506(c) and directed to the stack or vent tested.

(iii) Operating parameters representing uncontrolled operation must be established during these tests, as required by § 63.1511(g). For furnaces in batch (cyclic) operation, the number of tap-to-tap cycles (including zero, if none) elapsed using the feed/charge type, feed/charge rate and flux rate must be established as a parameter to be met before changing to uncontrolled mode. For furnaces in continuous (non-cyclic) operation, the time period elapsed (including no time if none) using the feed/charge type, feed/charge rate and flux rate must be established as a parameter to be met before changing to uncontrolled mode.

(iv) Emissions of D/F during this test must not exceed 1.5 μg TEQ/Mg of feed/charge.

(v) The emission factors for this mode of operation for use in the demonstration of compliance with the emission limits for SAPUs specified in § 63.1505(k), must be determined.

(3) Operators of area sources must conduct performance tests for D/F, according to the procedures in § 63.1512(d) with the capture system and control device operating normally, if compliance has not been previously demonstrated for this operating mode.

(i) Testing under this paragraph must be conducted in accordance with § 63.1511(b)(1).

(ii) Operating parameters must be established during these tests, as required by § 63.1511(g).

(iii) The D/F emission factor for this mode of operation for use in the demonstration of compliance with the emission limits for SAPUs specified in § 63.1505(k) must be determined.

(4) Operators of area sources must conduct performance tests for D/F, according to the procedures in § 63.1512(e) without operating a control device if compliance has not been previously demonstrated for this operating mode.

sfrattini on LAPJZKW1R2 with $$_JOB
VerDate Sep<11>2014 09:16 Apr 04, 2023 Jkt 256165 PO 00000 Frm 00102 Fmt 8010 Sfmt 8010 Q:\40\256165.XXX PC31

(i) Testing under this paragraph must be conducted at any time after operation with clean charge has commenced and must be conducted in accordance with §63.1511(b)(1) and under representative conditions expected to produce the highest level of D/F in the uncontrolled mode.

(ii) Testing under this paragraph must be conducted with furnace emissions captured in accordance with the provisions of §63.1506(c) and directed to the stack or vent tested.

(iii) Operating parameters representing uncontrolled operation must be established during these tests, as required by §63.1511(g). For furnaces in batch (cyclic) operation, the number of tap-to-tap cycles elapsed (including zero, if none) using the feed/charge type, feed/charge rate and flux rate must be established as a parameter to be met before changing to uncontrolled mode. For furnaces in continuous (non-cyclic) operation, the time period elapsed (including no time, if none) using the feed/charge type, feed/charge rate and flux rate must be established as a parameter to be met before changing to uncontrolled mode.

(iv) Emissions of D/F during this test must not exceed 1.5 μg TEQ/Mg of feed/charge.

(5) To change modes of operation from uncontrolled to controlled, the owner or operator must perform the following, before charging scrap to the furnace that exceeds the contaminant level established for uncontrolled mode:

(i) Change the label on the furnace to reflect controlled operation;

(ii) Direct the furnace emissions to the control device;

(iii) Turn on the control device and begin lime addition to the control device at the rate established for controlled mode; and

(iv) Ensure the control device is operating properly.

(6) To change modes of operation from controlled to uncontrolled, the owner or operator must perform the following, before turning off or bypassing the control device:

(i) Change the label on the furnace to reflect uncontrolled operation;

(ii) Charge clean charge for the number of tap-to-tap cycles that elapsed (or, for continuously operated furnaces, the time elapsed) before the uncontrolled mode performance test was conducted; and

(iii) Decrease the flux addition rate to no higher than the flux addition rate used in the uncontrolled mode performance test.

(7) In addition to the recordkeeping requirements of §63.1517, the owner or operator must maintain records of the nature of each mode change (controlled to uncontrolled, or uncontrolled to controlled), the time the furnace operating mode change is initiated, and the time the exhaust gas is diverted from control device to bypass or from bypass to control device.

(c) *Changing from a group 1 controlled or uncontrolled furnace to a group 2 furnace.* An owner or operator wishing to change operating modes must conduct performance tests in accordance with §§63.1511 and 63.1512 to demonstrate to the permitting authority for major sources, or the Administrator for area sources that compliance can be achieved under both modes and establish the number of cycles (or time) of operation with clean charge and no reactive flux addition necessary before changing to group 2 mode. Operating parameters relevant to group 1 operation must be established during the performance test.

(1) Operators of major sources must conduct performance tests for PM, HCl and D/F (and HF for uncontrolled group 1 furnaces) according to the procedures in §63.1512 if compliance has not been previously demonstrated for the operating mode. Controlled group 1 furnaces must conduct performance tests according to the procedures in §63.1512(d) with the capture system and control device operating normally. Uncontrolled group 1 furnaces must conduct performance tests according to the procedures in §63.1512(e) without operating a control device. Performance tests must be repeated at least once every 5 years to demonstrate compliance for each operating mode.

(i) Testing under this paragraph must be conducted in accordance with §63.1511(b)(1) in both modes.

(ii) Operating parameters must be established during these tests, as required by §63.1511(g).

sfrattini on LAPJZKW1R2 with $$_JOB
VerDate Sep<11>2014 09:16 Apr 04, 2023 Jkt 256165 PO 00000 Frm 00103 Fmt 8010 Sfmt 8010 Q:\40\256165.XXX PC31

(iii) The emission factors for this mode of operation for use in the demonstration of compliance with the emission limits for SAPUs specified in § 63.1505(k) must be determined.

(2) While in compliance with the operating requirements of § 63.1506(o) for group 2 furnaces, operators of major sources must conduct performance tests for PM, HCl, HF and D/F, according to the procedures in § 63.1512(e) without operating a control device if compliance has not been previously demonstrated for this operating mode. Performance tests must be repeated at least once every 5 years to demonstrate compliance for each operating mode.

(i) Testing under this paragraph may be conducted at any time after the furnace has commenced operation with clean charge and without reactive flux addition.

(ii) Testing under this paragraph must be conducted with furnace emissions captured in accordance with the provisions of § 63.1506(c) and directed to the stack or vent tested.

(iii) Owners or operators must demonstrate that emissions are no greater than:

(A) 1.5 μg D/F (TEQ) per Mg of feed/charge;

(B) 0.040 lb HCl or HF per ton of feed/charge; and

(C) 0.040 lb PM per ton of feed/charge.

(iv) The number of tap-to-tap cycles, or time elapsed between starting operation with clean charge and no reactive flux addition and the group 2 furnace performance test must be established as an operating parameter to be met before changing to group 2 mode.

(3) Operators of area sources must conduct a performance tests for D/F, according to the procedures in § 63.1512 if compliance has not been previously demonstrated for the operating mode. Controlled group 1 furnaces must conduct performance tests according to the procedures in § 63.1512(d) with the capture system and control device operating normally. Uncontrolled group 1 furnaces must conduct performance tests according to the procedures in § 63.1512(e) without operating a control device.

(i) The performance tests must be conducted in accordance with § 63.1511(b)(1) under representative conditions expected to produce the highest expected level of D/F in the group 1 mode.

(ii) Operating parameters must be established during these tests, as required by § 63.1511(g).

(iii) The D/F emission factor for this mode of operation, for use in the demonstration of compliance with the emission limits for SAPUs specified in § 63.1505(k) must be determined.

(4) While in compliance with the operating requirements of § 63.1506(o) for group 2 furnaces, operators of area sources must conduct performance tests for D/F, according to the procedures in § 63.1512(e) without operating a control device if compliance has not been previously demonstrated for this operating mode.

(i) Testing under this paragraph may be conducted at any time after the furnace has commenced operation with clean charge, and without reactive flux addition.

(ii) Testing under this paragraph must be conducted with furnace emissions captured in accordance with the provisions of § 63.1506(c) and directed to the stack or vent tested.

(iii) Owners or operators must demonstrate that emissions are no greater than 1.5 μg D/F (TEQ) per Mg of feed/charge.

(iv) The number of tap-to-tap cycles, or time elapsed between starting operation with clean charge and no reactive flux and the group 2 furnace performance tests must be established as an operating parameter to be met before changing to group 2 mode.

(5) To change modes of operation from a group 2 furnace to a group 1 furnace, the owner or operator must perform the following before adding other than clean charge and before adding reactive flux to the furnace:

(i) Change the label on the furnace to reflect group 1 operation;

(ii) Direct the furnace emissions to the control device, if it is equipped with a control device;

(iii) If the furnace is equipped with a control device, turn on the control device and begin lime addition to the control device at the rate established for group 1 mode; and

(iv) Ensure the control device is operating properly.

sfrattini on LAPJZKW1R2 with $$_JOB
VerDate Sep<11>2014 09:16 Apr 04, 2023 Jkt 256165 PO 00000 Frm 00104 Fmt 8010 Sfmt 8010 Q:\40\256165.XXX PC31

(6) To change mode of operation from a group 1 furnace to group 2 furnace, the owner or operator must perform the following, before turning off or bypassing the control device:

(i) Change the label on the furnace to reflect group 2 operation;

(ii) Charge clean charge for the number of tap-to-tap cycles that elapsed (or, for continuously operated furnaces, the time elapsed) before the group 2 performance test was conducted; and,

(iii) Use no reactive flux.

(7) In addition to the recordkeeping requirements of §63.1517, the owner or operator must maintain records of the nature of each mode change (controlled or uncontrolled to group 2), the time the change is initiated, and the time the exhaust gas is diverted from control device to bypass or from bypass to control device.

(d) *Changing from a group 1 controlled or uncontrolled furnace to group 2 furnace, for tilting reverberatory furnaces capable of completely removing furnace contents between batches.* An owner or operator of a tilting reverberatory furnace capable of completely removing furnace contents between batches who wishes to change operating modes must conduct performance tests in accordance with §§63.1511 and 63.1512 to demonstrate to the permitting authority for major sources, or the Administrator for area sources that compliance can be achieved under group 1 modes. Operating parameters relevant to group 1 operation must be established during the performance test.

(1) Operators of major sources must conduct performance tests for PM, HCl, and D/F (and HF for uncontrolled furnaces) according to the procedures in §63.1512 if compliance has not been previously demonstrated for this operating mode. Controlled group 1 furnaces must conduct performance tests with the capture system and control device operating normally if compliance has not been previously demonstrated for the operating mode. Controlled group 1 furnaces must conduct performance tests according to the procedures in §63.1512(d) with the capture system and control device operating normally. Uncontrolled group 1 furnaces must conduct performance tests according to the procedures in §63.1512(e) without operating a control device. Performance tests must be repeated at least once every 5 years to demonstrate compliance for each operating mode.

(i) Testing under this paragraph must be conducted in accordance with §63.1511(b)(1) in both modes.

(ii) Operating parameters must be established during these tests, as required by §63.1511(g).

(iii) The emission factors for this mode of operation for use in the demonstration of compliance with the emission limits for SAPUs specified in §63.1505(k), must be determined.

(2) Operators of area sources must conduct performance tests for D/F according to the procedures in §63.1512 if compliance has not been previously demonstrated for this operating mode. Controlled group 1 furnaces must conduct performance tests according to the procedures in §63.1512(d) with the capture system and control device operating normally. Uncontrolled group 1 furnaces must conduct performance tests according to the procedures in §63.1512(e) without operating a control device.

(i) The performance test must be conducted in accordance with §63.1511(b)(1) under representative conditions expected to produce the highest expected level of D/F in the group 1 mode.

(ii) Operating parameters must be established during these tests, as required by §63.1511(g).

(iii) The D/F emission factor for this mode of operation for use in the demonstration of compliance with the emission limits for SAPUs specified in §63.1505(k) must be determined.

(3) To change modes of operation from a group 1 furnace to a group 2 furnace, the owner or operator must perform the following before turning off or bypassing the control device:

(i) Completely remove all aluminum from the furnace;

(ii) Change the label on the furnace to reflect group 2 operation;

(iii) Use only clean charge; and

(iv) Use no reactive flux.

(4) To change modes of operation from a group 2 furnace to a group 1 furnace, the owner or operator must perform the following before adding other

sfrattini on LAPJZKW1R2 with $$_JOB
VerDate Sep<11>2014 09:16 Apr 04, 2023 Jkt 256165 PO 00000 Frm 00105 Fmt 8010 Sfmt 8010 Q:\40\256165.XXX PC31

than clean charge and before adding reactive flux to the furnace:

(i) Change the label on the furnace to reflect group 1 operation;

(ii) Direct the furnace emissions to the control device, if it is equipped with a control device;,

(iii) If the furnace is equipped with a control device, turn on the control device and begin lime addition to the control device at the rate established for group 1 mode; and

(iv) Ensure the control device is operating properly.

(5) In addition to the recordkeeping requirements of § 63.1517, the owner or operator must maintain records of the nature of each mode change (group 1 to group 2, or group 2 to group 1), the time the furnace operating mode change is initiated, and, if the furnace is equipped with a control device, the time the exhaust gas is diverted from control device to bypass or from bypass to control device.

(e) *Limit on frequency of changing furnace operating mode.* (1) A change in furnace operating mode, which consists of changing from one furnace operating mode to another and subsequently back to the initial operating mode, as provided in paragraphs (a) through (d) of this section, may not be done more frequently than 4 times in any 6-month period unless you receive approval from the permitting authority or Administrator for additional changes pursuant to paragraph (e)(2).

(2) If additional changes are needed, the owner or operator must apply in advance to the permitting authority, for major sources, or the Administrator, for area sources, for approval of the additional changes in operating mode.

[80 FR 56749, Sept. 18, 2015, as amended at 81 FR 38088, June 13, 2016]

NOTIFICATIONS, REPORTS, AND RECORDS

§ 63.1515 Notifications.

(a) *Initial notifications.* The owner or operator must submit initial notifications to the permitting authority for major sources, or the Administrator for area sources as described in paragraphs (a)(1) through (7) of this section.

(1) As required by § 63.9(b)(1), the owner or operator must provide notification for an area source that subsequently increases its emissions such that the source is a major source subject to the standard.

(2) As required by § 63.9(b)(3), the owner or operator of a new or reconstructed affected source, or a source that has been reconstructed such that it is an affected source, that has an initial startup after the effective date of this subpart and for which an application for approval of construction or reconstruction is not required under § 63.5(d), must provide notification that the source is subject to the standard.

(3) As required by § 63.9(b)(4), the owner or operator of a new or reconstructed major affected source that has an initial startup after the effective date of this subpart and for which an application for approval of construction or reconstruction is required by § 63.5(d) must provide the following notifications:

(i) Intention to construct a new major affected source, reconstruct a major source, or reconstruct a major source such that the source becomes a major affected source;

(ii) Date when construction or reconstruction was commenced (submitted simultaneously with the application for approval of construction or reconstruction if construction or reconstruction was commenced before the effective date of this subpart, or no later than 30 days after the date construction or reconstruction commenced if construction or reconstruction commenced after the effective date of this subpart);

(iii) Anticipated date of startup; and

(iv) Actual date of startup.

(4) As required by § 63.9(b)(5), after the effective date of this subpart, an owner or operator who intends to construct a new affected source or reconstruct an affected source subject to this subpart, or reconstruct a source such that it becomes an affected source subject to this subpart, must provide notification of the intended construction or reconstruction. The notification must include all the information required for an application for approval of construction or reconstruction as required by § 63.5(d). For major sources,

sfrattini on LAPJZKW1R2 with $$_JOB
VerDate Sep<11>2014 09:16 Apr 04, 2023 Jkt 256165 PO 00000 Frm 00106 Fmt 8010 Sfmt 8010 Q:\40\256165.XXX PC31

the application for approval of construction or reconstruction may be used to fulfill these requirements.

(i) The application must be submitted as soon as practicable before the construction or reconstruction is planned to commence (but no sooner than the effective date) if the construction or reconstruction commences after the effective date of this subpart; or

(ii) The application must be submitted as soon as practicable before startup but no later than 90 days after the effective date of this subpart if the construction or reconstruction had commenced and initial startup had not occurred before the effective date.

(5) As required by §63.9(d), the owner or operator must provide notification of any special compliance obligations for a new source.

(6) As required by §63.9(e) and (f), the owner or operator must provide notification of the anticipated date for conducting performance tests and visible emission observations. The owner or operator must notify the Administrator of the intent to conduct a performance test at least 60 days before the performance test is scheduled; notification of opacity or visible emission observations for a performance test must be provided at least 30 days before the observations are scheduled to take place.

(7) As required by §63.9(g), the owner or operator must provide additional notifications for sources with continuous emission monitoring systems or continuous opacity monitoring systems.

(b) *Notification of compliance status report.* Each owner or operator of an existing affected source must submit a notification of compliance status report within 60 days after the compliance date established by §63.1501. Each owner or operator of a new affected source must submit a notification of compliance status report within 90 days after conducting the initial performance test required by §63.1511(b), or within 90 days after the compliance date established by §63.1501 if no initial performance test is required. The notification must be signed by the responsible official who must certify its accuracy. A complete notification of compliance status report must include the information specified in paragraphs (a)(1) through (10) of this section. The required information may be submitted in an operating permit application, in an amendment to an operating permit application, in a separate submittal, or in any combination. In a State with an approved operating permit program where delegation of authority under section 112(l) of the CAA has not been requested or approved, the owner or operator must provide duplicate notification to the applicable Regional Administrator. If an owner or operator submits the information specified in this section at different times or in different submittals, later submittals may refer to earlier submittals instead of duplicating and resubmitting the information previously submitted. A complete notification of compliance status report must include:

(1) All information required in §63.9(h). The owner or operator must provide a complete performance test report for each affected source and emission unit for which a performance test is required. A complete performance test report includes all data, associated measurements, and calculations (including visible emission and opacity tests).

(2) The approved site-specific test plan and performance evaluation test results for each continuous monitoring system (including a continuous emission or opacity monitoring system).

(3) Unit labeling as described in §63.1506(b), including process type or furnace classification and operating requirements.

(4) The compliant operating parameter value or range established for each affected source or emission unit with supporting documentation and a description of the procedure used to establish the value (e.g., lime injection rate, total reactive chlorine flux injection rate, total reactive fluorine flux injection rate for uncontrolled group 1 furnaces, afterburner operating temperature, fabric filter inlet temperature), including the operating cycle or time period used in the performance test.

sfrattini on LAPJZKW1R2 with $$_JOB
VerDate Sep<11>2014 09:16 Apr 04, 2023 Jkt 256165 PO 00000 Frm 00107 Fmt 8010 Sfmt 8010 Q:\40\256165.XXX PC31

(5) Design information and analysis, with supporting documentation, demonstrating conformance with the requirements for capture/collection systems in § 63.1506(c).

(6) If applicable, analysis and supporting documentation demonstrating conformance with EPA guidance and specifications for bag leak detection systems in § 63.1510(f).

(7) Manufacturer's specification or analysis documenting the design residence time of no less than 1 second for each afterburner used to control emissions from a scrap dryer/delacquering kiln/decoating kiln subject to alternative emission standards in § 63.1505(e).

(8) Manufacturer's specification or analysis documenting the design residence time of no less than 0.8 seconds and design operating temperature of no less than 1,600 °F for each afterburner used to control emissions from a sweat furnace that is not subject to a performance test.

(9) The OM&M plan (including site-specific monitoring plan for each group 1 furnace with no add-on air pollution control device).

[65 FR 15710, Mar. 23, 2000, as amended at 67 FR 59793, Sept. 24, 2002; 67 FR 79818, Dec. 30, 2002; 80 FR 56752, Sept. 18, 2015; 81 FR 38088, June 13, 2016]

§ 63.1516 Reports.

(a) [Reserved]

(b) *Excess emissions/summary report.* The owner or operator of a major or area source must submit semiannual reports according to the requirements in § 63.10(e)(3). Except, the owner or operator must submit the semiannual reports within 60 days after the end of each 6-month period instead of within 30 days after the calendar half as specified in § 63.10(e)(3)(v). When no deviations of parameters have occurred, the owner or operator must submit a report stating that no excess emissions occurred during the reporting period.

(1) A report must be submitted if any of these conditions occur during a 6-month reporting period:

(i) The corrective action specified in the OM&M plan for a bag leak detection system alarm was not initiated within 1 hour.

(ii) The corrective action specified in the OM&M plan for a continuous opacity monitoring deviation was not initiated within 1 hour.

(iii) The corrective action specified in the OM&M plan for visible emissions from an aluminum scrap shredder was not initiated within 1 hour.

(iv) An excursion of a compliant process or operating parameter value or range (*e.g.*, lime injection rate or screw feeder setting, total reactive chlorine flux injection rate, afterburner operating temperature, fabric filter inlet temperature, definition of acceptable scrap, or other approved operating parameter).

(v) [Reserved]

(vi) An affected source (including an emission unit in a secondary aluminum processing unit) was not operated according to the requirements of this subpart.

(vii) A deviation from the 3-day, 24-hour rolling average emission limit for a secondary aluminum processing unit.

(2) Each report must include each of these certifications, as applicable:

(i) For each thermal chip dryer: ''Only unpainted aluminum chips were used as feedstock in any thermal chip dryer during this reporting period.''

(ii) For each dross-only furnace: ''Only dross and salt flux were used as the charge materials in any dross-only furnace during this reporting period.''

(iii) For each sidewell group 1 furnace with add-on air pollution control devices: ''Each furnace was operated such that the level of molten metal remained above the top of the passage between the sidewell and hearth during reactive fluxing, and reactive flux, except for cover flux, was added only to the sidewell or to a furnace hearth equipped with an add-on air pollution control device for PM, HCl, and D/F emissions during this reporting period.''

(iv) For each group 1 melting/holding furnace without add-on air pollution control devices and using pollution prevention measures that processes only clean charge material: ''Each group 1 furnace without add-on air pollution control devices subject to emission limits in § 63.1505(i)(2) processed only clean charge during this reporting period.''

sfrattini on LAPJZKW1R2 with $$_JOB
VerDate Sep<11>2014 09:16 Apr 04, 2023 Jkt 256165 PO 00000 Frm 00108 Fmt 8010 Sfmt 8010 Q:\40\256165.XXX PC31

(v) For each group 2 furnace: ''Only clean charge materials were processed in any group 2 furnace during this reporting period, and no fluxing was performed or all fluxing performed was conducted using only nonreactive, non-HAP-containing/non-HAP-generating fluxing gases or agents, except for cover fluxes, during this reporting period.''

(vi) For each in-line fluxer using no reactive flux: ''Only nonreactive, non-HAP-containing, non-HAP-generating flux gases, agents, or materials were used at any time during this reporting period.''

(vii) For each affected source choosing to demonstrate compliance during periods of startup and shutdown in accordance with §63.1513(f)(1): ''During each startup and shutdown, no flux and no feed/charge were added to the emission unit, and electricity, propane or natural gas were used as the sole source of heat or the emission unit was not heated.''

(3) The owner or operator must submit the results of any performance test conducted during the reporting period, including one complete report documenting test methods and procedures, process operation, and monitoring parameter ranges or values for each test method used for a particular type of emission point tested.

(i) Within 60 days after the date of completing each performance test (as defined in §63.2) required by this subpart, you must submit the results of the performance tests, including any associated fuel analyses, following the procedure specified in either paragraph (b)(3)(i)(A) or (B) of this section.

(A) For data collected using test methods supported by the EPA's Electronic Reporting Tool (ERT) as listed on the EPA's ERT Web site (*https://www3.epa.gov/ttn/chief/ert/ert_info.html*), you must submit the results of the performance test to the EPA via the Compliance and Emissions Data Reporting Interface (CEDRI). (CEDRI can be accessed through the EPA's Central Data Exchange (CDX) (*https://cdx.epa.gov/*).) Performance test data must be submitted in a file format generated through the use of the EPA's ERT or an alternate electronic file format consistent with the extensible markup language (XML) schema listed on the EPA's ERT Web site. If you claim that some of the performance test information being submitted is confidential business information (CBI), you must submit a complete file generated through the use of the EPA's ERT or an alternate electronic file consistent with the XML schema listed on the EPA's ERT Web site, including information claimed to be CBI, on a compact disc, flash drive, or other commonly used electronic storage media to the EPA. The electronic media must be clearly marked as CBI and mailed to U.S. EPA/OAQPS/CORE CBI Office, Attention: Group Leader, Measurement Policy Group, MD C404–02, 4930 Old Page Rd., Durham, NC 27703. The same ERT or alternate file with the CBI omitted must be submitted to the EPA via the EPA's CDX as described earlier in this paragraph.

(B) For data collected using test methods that are not supported by the EPA's ERT as listed on the EPA's ERT Web site, you must submit the results of the performance test to the Administrator at the appropriate address listed in §63.13.

(ii) [Reserved]

(4) A malfunction report that is required under paragraph (d) of this section shall be submitted simultaneously with the semiannual excess emissions/summary report required by paragraph (b) of this section.

(c) *Annual compliance certifications.* For the purpose of annual certifications of compliance required by 40 CFR part 70 or 71, the owner or operator of a major source subject to this subpart must certify continuing compliance based upon, but not limited to, the following conditions:

(1) Any period of excess emissions, as defined in paragraph (b)(1) of this section, that occurred during the year were reported as required by this subpart; and

(2) All monitoring, recordkeeping, and reporting requirements were met during the year.

(d) If there was a malfunction during the reporting period, the owner or operator must submit a report that includes the emission unit ID, monitor ID, pollutant or parameter monitored, beginning date and time of the event,

sfrattini on LAPJZKW1R2 with $$_JOB
VerDate Sep<11>2014 09:16 Apr 04, 2023 Jkt 256165 PO 00000 Frm 00109 Fmt 8010 Sfmt 8010 Q:\40\256165.XXX PC31

end date and time of the event, cause of the deviation or exceedance and corrective action taken for each malfunction which occurred during the reporting period and which caused or may have caused any applicable emission limitation to be exceeded. The report must include a list of the affected source or equipment, an estimate of the quantity of each regulated pollutant emitted over any emission limit, and a description of the method used to estimate the emissions, including, but not limited to, product-loss calculations, mass balance calculations, measurements when available, or engineering judgment based on known process parameters. The report must also include a description of actions taken by an owner or operator during a malfunction of an affected source to minimize emissions in accordance with § 63.1506(a)(5).

(e) All reports required by this subpart not subject to the requirements in paragraph (b) of this section must be sent to the Administrator at the appropriate address listed in § 63.13. If acceptable to both the Administrator and the owner or operator of a source, these reports may be submitted on electronic media. The Administrator retains the right to require submittal of reports subject to paragraph (b) of this section in paper format.

[65 FR 15710, Mar. 23, 2000, as amended at 69 FR 53984, Sept. 3, 2004; 71 FR 20461, Apr. 20, 2006; 80 FR 56753, Sept. 18, 2015; 81 FR 38088, June 13, 2016]

§ 63.1517 Records.

(a) As required by § 63.10(b), the owner or operator shall maintain files of all information (including all reports and notifications) required by the general provisions and this subpart.

(1) The owner or operator must retain each record for at least 5 years following the date of each occurrence, measurement, maintenance, corrective action, report, or record. The most recent 2 years of records must be retained at the facility. The remaining 3 years of records may be retained off site.

(2) The owner or operator may retain records on microfilm, computer disks, magnetic tape, or microfiche; and

(3) The owner or operator may report required information on paper or on a labeled computer disk using commonly available and EPA-compatible computer software.

(b) In addition to the general records required by § 63.10(b), the owner or operator of a new or existing affected source (including an emission unit in a secondary aluminum processing unit) must maintain records of:

(1) For each affected source and emission unit with emissions controlled by a fabric filter or a lime-injected fabric filter:

(i) If a bag leak detection system is used, the number of total operating hours for the affected source or emission unit during each 6-month reporting period, records of each alarm, the time of the alarm, the time corrective action was initiated and completed, and a brief description of the cause of the alarm and the corrective action(s) taken.

(ii) If a continuous opacity monitoring system is used, records of opacity measurement data, including records where the average opacity of any 6-minute period exceeds 5 percent, with a brief explanation of the cause of the emissions, the time the emissions occurred, the time corrective action was initiated and completed, and the corrective action taken.

(iii) If an aluminum scrap shredder is subject to visible emission observation requirements, records of all Method 9 observations, including records of any visible emissions during a 30-minute daily test or records of all ASTM D7520–13 observations (incorporated by reference, see § 63.14), including data sheets and all raw unaltered JPEGs used for opacity determination, with a brief explanation of the cause of the emissions, the time the emissions occurred, the time corrective action was initiated and completed, and the corrective action taken.

(2) For each affected source with emissions controlled by an afterburner:

(i) Records of 15-minute block average afterburner operating temperature, including any period when the average temperature in any 3-hour block period falls below the compliant operating parameter value with a brief explanation

sfrattini on LAPJZKW1R2 with $$_JOB
VerDate Sep<11>2014 09:16 Apr 04, 2023 Jkt 256165 PO 00000 Frm 00110 Fmt 8010 Sfmt 8010 Q:\40\256165.XXX PC31

of the cause of the excursion and the corrective action taken; and

(ii) Records of annual afterburner inspections.

(3) For each scrap dryer/delacquering kiln/decoating kiln and group 1 furnace, subject to D/F and HCl emission standards with emissions controlled by a lime-injected fabric filter, records of 15-minute block average inlet temperatures for each lime-injected fabric filter, including any period when the 3-hour block average temperature exceeds the compliant operating parameter value +14 °C (+ 25 °F), with a brief explanation of the cause of the excursion and the corrective action taken.

(4) For each affected source and emission unit with emissions controlled by a lime-injected fabric filter:

(i) Records of inspections at least once every 8-hour period verifying that lime is present in the feeder hopper or silo and flowing, including any inspection where blockage is found, with a brief explanation of the cause of the blockage and the corrective action taken, and records of inspections at least once every 4-hour period for the subsequent 3 days. If flow monitors, pressure drop sensors or load cells are used to verify that lime is present in the hopper and flowing, records of all monitor or sensor output including any event where blockage was found, with a brief explanation of the cause of the blockage and the corrective action taken;

(ii) If lime feeder setting is monitored, records of daily and monthly inspections of feeder setting, including records of any deviation of the feeder setting from the setting used in the performance test, with a brief explanation of the cause of the deviation and the corrective action taken. If a lime feeder has been repaired or replaced, this action must be documented along with records of the new feeder calibration and the feed mechanism set points necessary to maintain the lb/hr feed rate operating limit. These records must be maintained on site and available upon request.

(iii) If lime addition rate for a non-continuous lime injection system is monitored pursuant to the approved alternative monitoring requirements in §63.1510(v), records of the time and mass of each lime addition during each operating cycle or time period used in the performance test and calculations of the average lime addition rate (lb/ton of feed/charge).

(5) For each group 1 furnace (with or without add-on air pollution control devices) or in-line fluxer, records of 15-minute block average weights of gaseous or liquid reactive flux injection, total reactive flux injection rate and calculations (including records of the identity, composition, and weight of each addition of gaseous, liquid or solid reactive flux), including records of any period the rate exceeds the compliant operating parameter value and corrective action taken.

(6) For each continuous monitoring system, records required by §63.10(c).

(7) For each affected source and emission unit subject to an emission standard in kg/Mg (lb/ton) of feed/charge, records of feed/charge (or throughput) weights for each operating cycle or time period used in the performance test.

(8) Approved site-specific monitoring plan for a group 1 furnace without add-on air pollution control devices with records documenting conformance with the plan.

(9) Records of all charge materials for each thermal chip dryer, dross-only furnace, and group 1 melting/holding furnaces without air pollution control devices processing only clean charge.

(10) Operating logs for each group 1 sidewell furnace with add-on air pollution control devices documenting conformance with operating standards for maintaining the level of molten metal above the top of the passage between the sidewell and hearth during reactive flux injection and for adding reactive flux only to the sidewell or a furnace hearth equipped with a control device for PM, HCl, and D/F emissions.

(11) For each in-line fluxer for which the owner or operator has certified that no reactive flux was used:

(i) Operating logs which establish that no source of reactive flux was present at the in-line fluxer;

(ii) Labels required pursuant to §63.1506(b) which establish that no reactive flux may be used at the in-line fluxer; or

sfrattini on LAPJZKW1R2 with $$_JOB
VerDate Sep<11>2014 09:16 Apr 04, 2023 Jkt 256165 PO 00000 Frm 00111 Fmt 8010 Sfmt 8010 Q:\40\256165.XXX PC31

(iii) Operating logs which document each flux gas, agent, or material used during each operating cycle.

(12) Records of all charge materials and fluxing materials or agents for a group 2 furnace.

(13) Records of monthly inspections for proper unit labeling for each affected source and emission unit subject to labeling requirements.

(14) Records of annual inspections of emission capture/collection and closed vent systems or, if the alternative to the annual flow rate measurements is used, records of differential pressure; fan RPM or fan motor amperage; static pressure measurements; or duct centerline velocity using a hotwire anemometer, ultrasonic flow meter, cross-duct pressure differential sensor, venturi pressure differential monitoring or orifice plate equipped with an associated thermocouple, as appropriate.

(15) Records for any approved alternative monitoring or test procedure.

(16) Current copy of all required plans, including any revisions, with records documenting conformance with the applicable plan, including:

(i) [Reserved]

(ii) OM&M plan; and

(iii) Site-specific secondary aluminum processing unit emission plan (if applicable).

(17) For each secondary aluminum processing unit, records of total charge weight, or if the owner or operator chooses to comply on the basis of aluminum production, total aluminum produced for each 24-hour period and calculations of 3-day, 24-hour rolling average emissions.

(18) For any failure to meet an applicable standard, the owner or operator must maintain the following records;

(i) Records of the emission unit ID, monitor ID, pollutant or parameter monitored, beginning date and time of the event, end date and time of the event, cause of the deviation or exceedance and corrective action taken.

(ii) Records of actions taken during periods of malfunction to minimize emissions in accordance with § 63.1506(a)(5), including corrective actions to restore malfunctioning process and air pollution control and monitoring equipment to its normal or usual manner of operation.

(19) For each period of startup or shutdown for which the owner or operator chooses to demonstrate compliance for an affected source, the owner or operator must comply with (b)(19)(i) or (ii) of this section.

(i) To demonstrate compliance based on a feed/charge rate of zero, a flux rate of zero and the use of electricity, propane or natural gas as the sole sources of heating or the lack of heating, the owner or operator must submit a semiannual report in accordance with § 63.1516(b)(2)(vii) or maintain the following records:

(A) The date and time of each startup and shutdown;

(B) The quantities of feed/charge and flux introduced during each startup and shutdown; and

(C) The types of fuel used to heat the unit, or that no fuel was used, during startup and shutdown; or

(ii) To demonstrate compliance based on performance tests, the owner or operator must maintain the following records:

(A) The date and time of each startup and shutdown;

(B) The measured emissions in lb/hr or μg/hr or ng/hr;

(C) The measured feed/charge rate in tons/hr or Mg/hr from your most recent performance test associated with a production rate greater than zero, or the rated capacity of the affected source if no prior performance test data is available; and

(D) An explanation to support that such conditions are considered representative startup and shutdown operations.

(20) For owners or operators that choose to change furnace operating modes, the following records must be maintained:

(i) The date and time of each change in furnace operating mode, and

(ii) The nature of the change in operating mode (for example, group 1 controlled furnace processing other than clean charge to group 2).

[65 FR 15710, Mar. 23, 2000, as amended at 67 FR 79818, Dec. 30, 2002; 80 FR 56753, Sept. 18, 2015; 81 FR 38089, June 13, 2016]

sfrattini on LAPJZKW1R2 with $$_JOB
VerDate Sep<11>2014 09:16 Apr 04, 2023 Jkt 256165 PO 00000 Frm 00112 Fmt 8010 Sfmt 8010 Q:\40\256165.XXX PC31

OTHER

§ 63.1518 Applicability of general provisions.

The requirements of the general provisions in subpart A of this part that are applicable to the owner or operator subject to the requirements of this subpart are shown in appendix A to this subpart.

§ 63.1519 Implementation and enforcement.

(a) This subpart can be implemented and enforced by the U.S. EPA, or a delegated authority such as the applicable State, local, or Tribal agency. If the U.S. EPA Administrator has delegated authority to a State, local, or Tribal agency, then that agency, in addition to the U.S. EPA, has the authority to implement and enforce this regulation. Contact the applicable U.S. EPA Regional Office to find out if this subpart is delegated to a State, local, or Tribal agency.

(b) In delegating implementation and enforcement authority of this regulation to a State, local, or Tribal agency under subpart E of this part, the authorities contained in paragraph (c) of this section are retained by the Administrator of U.S. EPA and cannot be transferred to the State, local, or Tribal agency.

(c) The authorities that cannot be delegated to State, local, or Tribal agencies are as specified in paragraphs (c)(1) through (4) of this section.

(1) Approval of alternatives to the requirements in §§ 63.1500 through 63.1501 and 63.1505 through 63.1506.

(2) Approval of major alternatives to test methods for under § 63.7(e)(2)(ii) and (f), as defined in § 63.90, and as required in this subpart.

(3) Approval of major alternatives to monitoring under § 63.8(f), as defined in § 63.90, and as required in this subpart.

(4) Approval of major alternatives to recordkeeping and reporting under § 63.10(f), as defined in § 63.90, and as required in this subpart.

[68 FR 37359, June 23, 2003]

§ 63.1520 [Reserved]

sfrattini on LAPJZKW1R2 with $$_JOB
VerDate Sep<11>2014 09:16 Apr 04, 2023 Jkt 256165 PO 00000 Frm 00113 Fmt 8010 Sfmt 8010 Q:\40\256165.XXX PC31

TABLE 1 TO SUBPART RRR OF PART 63—EMISSION STANDARDS FOR NEW AND EXISTING AFFECTED SOURCES

Table 1 to Subpart RRR of Part 63—Emission Standards for New and Existing Affected Sources

Affected source/ Emission unit	Pollutant	Limit	Units
All new and existing affected sources and emission units that are controlled with a PM add-on control device and that choose to monitor with a continuous opacity monitor (COM); and all new and existing aluminum scrap shredders that choose to monitor with a COM or to monitor visible emissions	Opacity	10	percent
New and existing aluminum scrap shredder	PM	0.01	gr/dscf
New and existing thermal chip dryer	THC D/F[a]	0.80 2.50	lb/ton of feed µg TEQ/Mg of feed
New and existing scrap dryer/delacquering kiln/decoating kiln Or Alternative limits if afterburner has a design residence time of at least 1 second and operates at a temperature of at least 1400°F	PM HCl THC D/F[a] PM HCl THC D/F[a]	0.08 0.80 0.06 0.25 0.30 1.50 0.20 5.0	lb/ton of feed lb/ton of feed lb/ton of feed µg TEQ/Mg of feed lb/ton of feed lb/ton of feed lb/ton of feed µg TEQ/Mg of feed
New and existing sweat furnace	D/F[a]	0.80	ng TEQ/dscm 11% O_2[b]
New and existing dross-only furnace	PM	0.30	lb/ton of feed
New and existing in-line fluxer[c]	HCl PM	0.04 0.01	lb/ton of feed lb/ton of feed
New and existing in-line fluxer with no reactive fluxing		No Limit	Work practice: no reactive fluxing
New and existing rotary dross cooler	PM	0.04	gr/dscf
New and existing clean furnace (Group 2)		No Limit	Work practices: clean charge only and no reactive fluxing
New and existing group 1 melting/holding furnace (processing only clean charge)[c]	PM HF[h] HCl	0.80 0.40 0.40 or 10	lb/ton of feed lb/ton of feed lb/ton of feed percent of the HCl upstream of the add-on control device
New and existing group 1 furnace[c]	PM HF[h] HCl	0.40 0.40 0.40 or	lb/ton of feed lb/ton of feed lb/ton of feed

sfrattini on LAPJZKW1R2 with $$_JOB
VerDate Sep<11>2014 09:16 Apr 04, 2023 Jkt 256165 PO 00000 Frm 00114 Fmt 8010 Sfmt 8006 Q:\40\256165.XXX PC31
ER13JN16.012</GPH>

Affected source/ Emission unit	Pollutant	Limit	Units
		10	percent of the HCl upstream of the add-on control device
	D/F[a]	15.0	µg TEQ/Mg of feed
New and existing group 1 furnace with clean charge only[c]	PM	0.40	lb/ton of feed
	HF[h]	0.40	lb/ton of feed
	HCl	0.40 or 10	lb/ton of feed percent of the HCl upstream of an add-on control device
	D/F[a]	No Limit	Clean charge only
New and existing secondary aluminum processing unit[a,d] (consists of all existing group 1 furnaces and existing in-line flux boxes at the facility, or any combination of new group 1 furnaces and new in-line fluxers)	PM[e]	$L_{t_{PM}} = \frac{\sum_{i=1}^{n}\left(L_{i_{PM}} \times T_i\right)}{\sum_{i=1}^{n}\left(T_i\right)}$ (Eq. 1)	
	HCl and HF[f, h]	$L_{t_{HCl/HF}} = \frac{\sum_{i=1}^{n}\left(L_{i_{HCl/HF}} \times T_i\right)}{\sum_{i=1}^{n}\left(T_i\right)}$ (Eq.2)	
	D/F[g]	$L_{t_{D/F}} = \frac{\sum_{i=1}^{n}\left(L_{i_{D/F}} \times T_i\right)}{\sum_{i=1}^{n}\left(T_i\right)}$ (Eq. 3)	

[a] D/F limit applies to a unit at a major or area source.

[b] Sweat furnaces equipped with afterburners meeting the specifications of § 63.1505(f)(1) are not required to conduct a performance test.

[c] These limits are also used to calculate the limits applicable to secondary aluminum processing units.

[d] Equation definitions: L_{iPM} = the PM emission limit for individual emission unit i in the secondary aluminum processing unit [kg/Mg (lb/ton) of feed]; T_i = the feed rate for individual emission unit i in the secondary aluminum processing unit; L_{tPM} = the overall PM emission limit for the secondary aluminum processing unit [kg/Mg (lb/ton) of feed]; $L_{iHCl/HF}$ = the HCl or HF emission limit for individual emission unit i in the secondary aluminum processing unit [kg/Mg (lb/ton) of feed]; $L_{tHCl/HF}$ = the overall HCl or HF emission limit for the secondary aluminum processing unit [kg/Mg (lb/ton) of feed]; $L_{iD/F}$ = the D/F emission limit for individual emission unit i [µg (TEQ)/Mg (gr TEQ/ton) of feed]; $L_{tD/F}$ = the overall D/F emission limit for the secondary aluminum processing unit [µg TEQ/Mg (gr TEQ/ton) of feed]; n = the number of units in the secondary aluminum processing unit.

[e] In-line fluxers using no reactive flux materials cannot be included in this calculation since they are not subject to the PM limit.

[f] In-line fluxers using no reactive flux materials cannot be included in this calculation since they are not subject to the HCl and HF limit. Controlled group 1 furnaces cannot be included in the HF emissions calculation because they are not subject to HF limits.

[g] Clean charge furnaces cannot be included in this calculation since they are not subject to the D/F limit.

[h] HF limits apply only to uncontrolled group 1 furnaces.

[81 FR 38089, June 13, 2016]

sfrattini on LAPJZKW1R2 with $$_JOB
VerDate Sep<11>2014 09:16 Apr 04, 2023 Jkt 256165 PO 00000 Frm 00115 Fmt 8010 Sfmt 8026 Q:\40\256165.XXX PC31
ER13JN16.013</GPH>

TABLE 2 TO SUBPART RRR OF PART 63—SUMMARY OF OPERATING REQUIREMENTS FOR NEW AND EXISTING AFFECTED SOURCES AND EMISSION UNITS

Affected source/emission unit	Monitor type/operation/process	Operating requirements
All affected sources and emission units with an add-on air pollution control device.	Emission capture and collection system.	Design and install in accordance with ACGIH Guidelines;[e] operate in accordance with OM&M plan (sweat furnaces may be operated according to 63.1506(c)(4)).[b]
All affected sources and emission units subject to production-based (lb/ton of feed) emission limits[a].	Charge/feed weight or Production weight.	Operate a device that records the weight of each charge; Operate in accordance with OM&M plan.[b]
Group 1 furnace, group 2 furnace, in-line fluxer and scrap dryer/delacquering kiln/decoating kiln.	Labeling	Identification, operating parameter ranges and operating requirements posted at affected sources and emission units; control device temperature and residence time requirements posted at scrap dryer/delacquering kiln/decoating kiln.
Aluminum scrap shredder with fabric filter.	Bag leak detector or	Initiate corrective action within 1-hr of alarm and complete in accordance with OM&M plan[b]; operate such that alarm does not sound more than 5% of operating time in 6-month period.
	COM or	Initiate corrective action within 1-hr of a 6-minute average opacity reading of 5% or more and complete in accordance with OM&M plan.[b]
	VE	Initiate corrective action within 1-hr of any observed VE and complete in accordance with the OM&M plan.[b]
Thermal chip dryer with afterburner.	Afterburner operating temperature.	Maintain average temperature for each 3-hr period at or above average operating temperature during the performance test.
	Afterburner operation	Operate in accordance with OM&M plan.[b]
	Feed material	Operate using only unpainted aluminum chips.
Scrap dryer/delacquering kiln/decoating kiln with afterburner and lime-injected fabric filter.	Afterburner operating temperature.	Maintain average temperature for each 3-hr period at or above average operating temperature during the performance test.
	Afterburner operation	Operate in accordance with OM&M plan.[b]
	Bag leak detector or	Initiate corrective action within 1-hr of alarm and complete in accordance with the OM&M plan;[b] operate such that alarm does not sound more than 5% of operating time in 6-month period.
	COM	Initiate corrective action within 1-hr of a 6-minute average opacity reading of 5% or more and complete in accordance with the OM&M plan.[b]
	Fabric filter inlet temperature	Maintain average fabric filter inlet temperature for each 3-hr period at or below average temperature during the performance test +14 °C (+25 °F).
	Lime injection rate	Maintain free-flowing lime in the feed hopper or silo at all times for continuous injection systems; maintain feeder setting at or above the level established during the performance test for continuous injection systems.
Sweat furnace with afterburner	Afterburner operating temperature.	If a performance test was conducted, maintain average temperature for each 3-hr period at or above average operating temperature during the performance test; if a performance test was not conducted, and afterburner meets specifications of § 63.1505(f)(1), maintain average temperature for each 3-hr period at or above 1600 °F.
	Afterburner operation	Operate in accordance with OM&M plan.[b]
Dross-only furnace with fabric filter.	Bag leak detector or	Initiate corrective action within 1-hr of alarm and complete in accordance with the OM&M plan;[b] operate such that alarm does not sound more than 5% of operating time in 6-month period.
	COM	Initiate corrective action within 1-hr of a 6-minute average opacity reading of 5% or more and complete in accordance with the OM&M plan.[b]
	Feed/charge material	Operate using only dross as the feed material.
Rotary dross cooler with fabric filter.	Bag leak detector or	Initiate corrective action within 1-hr of alarm and complete in accordance with the OM&M plan;[b] operate such that alarm does not sound more than 5% of operating time in 6-month period.
	COM	Initiate corrective action within 1-hr of a 6-minute average opacity reading of 5% or more and complete in accordance with the OM&M plan.[b]
In-line fluxer with lime-injected fabric filter (including those that are part of a secondary aluminum processing unit).	Bag leak detector or	Initiate corrective action within 1-hr of alarm and complete in accordance with the OM&M plan;[b] operate such that alarm does not sound more than 5% of operating time in 6-month period.

sfrattini on LAPJZKW1R2 with $$_JOB
VerDate Sep<11>2014 09:16 Apr 04, 2023 Jkt 256165 PO 00000 Frm 00116 Fmt 8010 Sfmt 8026 Q:\40\256165.XXX PC31

Affected source/emission unit	Monitor type/operation/process	Operating requirements
	COM	Initiate corrective action within 1-hr of a 6-minute average opacity reading of 5% or more and complete in accordance with the OM&M plan.[b]
	Lime injection rate	Maintain free-flowing lime in the feed hopper or silo at all times for continuous injection systems; maintain feeder setting at or above the level established during performance test for continuous injection systems.
	Reactive flux injection rate	Maintain reactive flux injection rate at or below rate used during the performance test for each operating cycle or time period used in the performance test.
In-line fluxer (using no reactive flux material).	Flux materials	Use no reactive flux.
Group 1 furnace with lime-injected fabric filter (including those that are part of a secondary of aluminum processing unit).	Bag leak detector or	Initiate corrective action within 1-hr of alarm; operate such that alarm does not sound more than 5% of operating time in 6-month period; complete corrective action in accordance with the OM&M plan.[b]
	COM	Initiate corrective action within 1-hr of a 6-minute average opacity reading of 5% or more; complete corrective action in accordance with the OM&M plan.[b]
	Fabric filter inlet temperature	Maintain average fabric filter inlet temperature for each 3-hour period at or below average temperature during the performance test +14 °C (+25 °F).
	Natural gas-fired, propane-fired or electrically heated group 1 furnaces that will be idled for at least 24 hours.	Operation of associated capture/collection systems and APCD[b] may be temporarily stopped. Operation of these capture/collection systems and control devices must be restarted before feed/charge, flux or alloying materials are added to the furnace.
	Reactive flux injection rate	Maintain reactive flux injection rate (kg/Mg) (lb/ton) at or below rate used during the performance test for each furnace cycle.
	Lime injection rate	Maintain free-flowing lime in the feed hopper or silo at all times for continuous injection systems; maintain feeder setting at or above the level established at performance test for continuous injection systems.
	Maintain molten aluminum level.	Operate sidewell furnaces such that the level of molten metal is above the top of the passage between sidewell and hearth during reactive flux injection, unless the hearth is also controlled.
	Fluxing in sidewell furnace hearth.	Add reactive flux only to the sidewell of the furnace unless the hearth is also controlled.
Group 1 furnace without add-on air pollution controls (including those that are part of a secondary aluminum processing unit).	Reactive flux injection rate	Maintain the total reactive chlorine flux injection rate and total reactive fluorine flux injection rate for each operating cycle or time period used in the performance test at or below the average rate established during the performance test.
Clean (group 2) furnace	Charge and flux materials	Use only clean charge. Use no reactive flux.

[a] Thermal chip dryers, scrap dryers/delacquering kilns/decoating kilns, dross-only furnaces, in-line fluxers and group 1 furnaces including melting/holding furnaces.
[b] OM&M plan—Operation, maintenance, and monitoring plan.
[c] Site-specific monitoring plan. Owner/operators of group 1 furnaces without add-on APCD must include a section in their OM&M plan that documents work practice and pollution prevention measures, including procedures for scrap inspection, by which compliance is achieved with emission limits and process or feed parameter-based operating requirements. This plan and the testing to demonstrate adequacy of the monitoring plan must be developed in coordination with and approved by the permitting authority for major sources, or the Administrator for area sources.
[d] APCD—Air pollution control device.
[e] Incorporated by reference, see § 63.14.

[65 FR 15710, Mar. 23, 2000, as amended at 67 FR 79818, Dec. 30, 2002; 69 FR 53984, Sept. 3, 2004; 80 FR 56757, Sept. 18, 2015; 81 FR 38092, June 13, 2016]

Table 3 to Subpart RRR of Part 63—Summary of Monitoring Requirements for New and Existing Affected Sources and Emission Units

Affected source/Emission unit	Monitor type/Operation/Process	Monitoring requirements
All affected sources and emission units with an add-on air pollution control device.	Emission capture and collection system.	Annual inspection of all emission capture, collection, and transport systems to ensure that systems continue to operate in accordance with ACGIH Guidelines.[e] Inspection includes volumetric flow rate measurements or verification of a permanent total enclosure using EPA Method 204.[d]

sfrattini on LAPJZKW1R2 with $$_JOB
VerDate Sep<11>2014 09:16 Apr 04, 2023 Jkt 256165 PO 00000 Frm 00117 Fmt 8010 Sfmt 8002 Q:\40\256165.XXX PC31

Affected source/Emission unit	Monitor type/Operation/Process	Monitoring requirements
All affected sources and emission units subject to production-based (lb/ton or gr/ton of feed/charge) emission limits.[a].	Feed/charge weight	Record weight of each feed/charge, weight measurement device or other procedure accuracy of ±1%;[b] calibrate according to manufacturer's specifications, or at least once every 6 months.
Group 1 furnace, group 2 furnace, in-line fluxer, and scrap dryer/delacquering kiln/decoating kiln.	Labeling	Check monthly to confirm that labels are intact and legible.
Aluminum scrap shredder with fabric filter.	Bag leak detector or	Install and operate in accordance with manufacturer's operating instructions.
	COM or	Design and install in accordance with PS–1; collect data in accordance with subpart A of 40 CFR part 63; determine and record 6-minute block averages.
	VE	Conduct and record results of 30-minute daily test in accordance with Method 9 or ASTM D7520–13.[e]
Thermal chip dryer with afterburner.	Afterburner operating temperature.	Continuous measurement device to meet specifications in §63.1510(g)(1); record average temperature for each 15-minute block; determine and record 3-hr block averages.
	Afterburner operation	Annual inspection of afterburner internal parts; complete repairs in accordance with the OM&M plan.
	Feed/charge material	Record identity of each feed/charge; certify feed/charge materials every 6 months.
Scrap dryer/delacquering kiln/decoating kiln with afterburner and lime-injected fabric filter.	Afterburner operating temperature.	Continuous measurement device to meet specifications in §63.1510(g)(1); record temperature for each 15-minute block; determine and record 3-hr block averages.
	Afterburner operation	Annual inspection of afterburner internal parts; complete repairs in accordance with the OM&M plan.
	Bag leak detector or	Install and operate in accordance with manufacturer's operating instructions.
	COM	Design and Install in accordance with PS–1; collect data in accordance with subpart A of 40 CFR part 63; determine and record 6-minute block averages.
	Lime injection rate	For continuous injection systems, inspect each feed hopper or silo every 8 hours to verify that lime is free flowing; record results of each inspection. If blockage occurs, inspect every 4 hours for 3 days; return to 8-hour inspections if corrective action results in no further blockage during 3-day period, record feeder setting daily. Verify monthly that lime injection rate is no less than 90 percent of the rate used during the compliance demonstration test.
	Fabric filter inlet temperature	Continuous measurement device to meet specifications in §63.1510(h)(2); record temperatures in 15-minute block averages; determine and record 3-hr block averages.
Sweat furnace with afterburner	Afterburner operating temperature.	Continuous measurement device to meet specifications in §63.1510(g)(1); record temperatures in 15-minute block averages; determine and record 3-hr block averages.
	Afterburner operation	Annual inspection of afterburner internal parts; complete repairs in accordance with the OM&M plan.
Dross-only furnace with fabric filter.	Bag leak detector or	Install and operate in accordance with manufacturer's operating instructions.
	COM	Design and install in accordance with PS–1; collect data in accordance with subpart A of 40 CFR part 63; determine and record 6-minute block averages.
	Feed/charge material	Record identity of each feed/charge; certify charge materials every 6 months.
Rotary dross cooler with fabric filter.	Bag leak detector or	Install and operate in accordance with manufacturer's operating instructions.
	COM	Design and install in accordance with PS–1; collect data in accordance with subpart A of 40 CFR part 63; determine and record 6-minute block averages.
In-line fluxer with lime-injected fabric filter.	Bag leak detector or	Install and operate in accordance with manufacturer's operating instructions.
	COM	Design and install in accordance with PS–1; collect data in accordance with subpart A of 40 CFR part 63; determine and record 6-minute block averages.

sfrattini on LAPJZKW1R2 with $$_JOB
VerDate Sep<11>2014 09:16 Apr 04, 2023 Jkt 256165 PO 00000 Frm 00118 Fmt 8010 Sfmt 8002 Q:\40\256165.XXX PC31

Affected source/Emission unit	Monitor type/Operation/Process	Monitoring requirements
	Reactive flux injection rate	Weight measurement device accuracy of ±1%;[b] calibrate according to manufacturer's specifications or at least once every 6 months; record time, weight and type of reactive flux added or injected for each 15-minute block period while reactive fluxing occurs; calculate and record total reactive chlorine flux injection rate and the total reactive fluorine flux injection rate for each operating cycle or time period used in performance test; or Alternative flux injection rate determination procedure per § 63.1510(j)(5). For solid flux added intermittently, record the amount added for each operating cycle or time period used in the performance test.
In-line fluxer using no reactive flux.	Flux materials	Record flux materials; certify every 6 months for no reactive flux.
Group 1 furnace with lime-injected fabric filter.	Bag leak detector or	Install and operate in accordance with manufacturer's operating instructions.
	COM	Design and install in accordance with PS–1; collect data in accordance with subpart A of 40 part CFR 63; determine and record 6-minute block averages.
	Lime injection rate	For continuous injection systems, record feeder setting daily and inspect each feed hopper or silo every 8 hours to verify that lime is free-flowing; record results of each inspection. If blockage occurs, inspect every 4 hours for 3 days; return to 8-hour inspections if corrective action results in no further blockage during 3-day period.[c] Verify monthly that the lime injection rate is no less than 90 percent of the rate used during the compliance demonstration test.
	Reactive flux injection rate	Weight measurement device accuracy of ±1%;[b] calibrate every 3 months; record weight and type of reactive flux added or injected for each 15-minute block period while reactive fluxing occurs; calculate and record total reactive chlorine flux injection rate and the total reactive fluorine flux injection rate for each operating cycle or time period used in performance test; or Alternative flux injection rate determination procedure per § 63.1510(j)(5). For solid flux added intermittently, record the amount added for each operating cycle or time period used in the performance test.
Group 1 furnace without add-on controls.	Fluxing in sidewell furnace hearth.	Maintain flux addition operating log; certify every 6 months.
	Reactive flux injection rate	Weight measurement device accuracy of +1%;[b] calibrate according to manufacturer's specifications or at least once every six months; record weight and type of reactive flux added or injected for each 15-minute block period while reactive fluxing occurs; calculate and record total reactive flux injection rate for each operating cycle or time period used in performance test. For solid flux added intermittently, record the amount added for each operating cycle or time period used in the performance test.
	OM&M plan (approved by permitting agency).	Demonstration of site-specific monitoring procedures to provide data and show correlation of emissions across the range of charge and flux materials and furnace operating parameters.
	Feed material (melting/holding furnace).	Record type of permissible feed/charge material; certify charge materials every 6 months.
Clean (group 2) furnace	Charge and flux materials	Record charge and flux materials; certify every 6 months for clean charge and no reactive flux.

[a] Thermal chip dryers, scrap dryers/delacquering kilns/decoating kilns, dross-only furnaces, in-line fluxers and group 1 furnaces or melting/holding furnaces.

[b] Permitting agency may approve measurement devices of alternative accuracy, for example in cases where flux rates are very low and costs of meters of specified accuracy are prohibitive; or where feed/charge weighing devices of specified accuracy are not practicable due to equipment layout or charging practices.

[c] Permitting authority for major sources, or the Administrator for area sources may approve other alternatives including load cells for lime hopper weight, sensors for carrier gas pressure, or HCl monitoring devices at fabric filter outlet.

[d] The frequency of volumetric flow rate measurements may be decreased to once every 5 years if daily differential pressure measures, daily fan RPM, or daily fan motor amp measurements are made in accordance with § 63.1510(d)(2)(ii)–(iii). The frequency of annual verification of a permanent total enclosure may be decreased to once every 5 years if negative pressure measurements in the enclosure are made daily in accordance with § 63.1510(d)(2)(iv). In lieu of volumetric flow rate measurements or verification of permanent total enclosure, sweat furnaces may demonstrate annually negative air flow into the sweat furnace opening in accordance with § 63.1510(d)(3).

[e] Incorporated by reference, see § 63.14.

[65 FR 15710, Mar. 23, 2000, as amended at 69 FR 53985, Sept. 3, 2004; 80 FR 56758, Sept. 18, 2015; 81 FR 38092, June 13, 2016]

sfrattini on LAPJZKW1R2 with $$_JOB
VerDate Sep<11>2014 09:16 Apr 04, 2023 Jkt 256165 PO 00000 Frm 00119 Fmt 8010 Sfmt 8026 Q:\40\256165.XXX PC31

Appendix A to Subpart RRR of Part 63—General Provisions Applicability to Subpart RRR

Citation	Requirement	Applies to RRR	Comment
§ 63.1(a)(1)–(4)	General Applicability	Yes.	
§ 63.1(a)(5)		No	[Reserved]
§ 63.1(a)(6)		Yes.	
§ 63.1(a)(7)–(9)		No	[Reserved]
§ 63.1(a)(10)–(12)		Yes.	
§ 63.1(b)	Initial Applicability Determination.	Yes	EPA retains approval authority.
§ 63.1(c)(1)	Applicability After Standard Established.	Yes.	
§ 63.1(c)(2)		Yes	§ 63.1500(e) exempts area sources subject to this subpart from the obligation to obtain Title V operating permits.
§ 63.1(c)(3)–(4)		No	[Reserved]
§ 63.1(c)(5)		Yes.	
§ 63.1(c)(6)	Reclassification	Yes.	
§ 63.1(d)		No	[Reserved]
§ 63.1(e)	Applicability of Permit Program	Yes.	
§ 63.2	Definitions	Yes	Additional definitions in § 63.1503.
§ 63.3	Units and Abbreviations	Yes.	
§ 63.4(a)(1)–(2)	Prohibited Activities	Yes.	
§ 63.4(a)(3)–(5)		No	[Reserved]
§ 63.4(b)	Circumvention	Yes.	
§ 63.4(c)	Fragmentation	Yes.	
§ 63.5(a)	Applicability of Preconstruction Review and Notification.	Yes.	
§ 63.5(b)(1)	Requirements for Existing, Newly, Constructed Sources and Reconstructed Sources.	Yes.	
§ 63.5(b)(2)		No	[Reserved]
§ 63.5(b)(3)–(4)		Yes.	
§ 63.5(b)(5)		No	[Reserved]
§ 63.5(b)(6)		Yes.	
§ 63.5(c)		No	[Reserved]
§ 63.5(d)	Application for Approval of Construction or Reconstruction.	Yes.	
§ 63.5(e)	Approval of Construction or Reconstruction.	Yes.	
§ 63.5(f)	Approval of Construction or Reconstruction Based on Prior State Preconstruction Review.	Yes.	
§ 63.6(a)	Applicability for Compliance with Standards and Maintenance Requirements.	Yes.	
§ 63.6(b)(1)–(5)	Compliance Dates for New and Reconstructed Sources.	Yes	§ 63.1501 specifies dates.
§ 63.6(b)(6)		No	[Reserved]
§ 63.6(b)(7)		Yes.	
§ 63.6(c)(1)	Compliance Dates for Existing Sources.	Yes	§ 63.1501 specifies dates.
§ 63.6(c)(2)		Yes.	
§ 63.6(c)(3)–(4)		No	[Reserved]
§ 63.6(c)(5)		Yes.	
§ 63.6(d)		No	[Reserved]
§ 63.6(e)(1)(i)	Operation and Maintenance Requirements.	No	See § 63.1506(a)(5) for general duty requirement. Any other cross reference to § 63.6(3)(1)(i) in any other general provision referenced shall be treated as a cross reference to § 63.1506(a)(5).
§ 63.6(e)(1)(ii)		No.	
§ 63.6(e)(2)		No	[Reserved]
§ 63.6(e)(3)	Startup, Shutdown, and Malfunction Plan.	No.	
§ 63.6(f)(1)	Compliance with Nonopacity Emission Standards.	No.	

sfrattini on LAPJZKW1R2 with $$_JOB
VerDate Sep<11>2014 09:16 Apr 04, 2023 Jkt 256165 PO 00000 Frm 00120 Fmt 8010 Sfmt 8002 Q:\40\256165.XXX PC31

Citation	Requirement	Applies to RRR	Comment
§ 63.6(f)(2)		Yes.	
§ 63.6(g)	Use of an Alternative Non-opacity Emission Standard.	No.	
§ 63.6(h)(1)	Applicability for Compliance with Opacity and Visible Emission Standards.	No.	
§ 63.6(h)(2)	Methods for Determining Compliance.	Yes.	
§ 63.6(h)(3)		No	[Reserved]
§ 63.6(h)(4)–(9)		Yes.	
§ 63.6(i)(1)–(14)	Extension of Compliance	Yes.	
§ 63.6(i)(15)		No	[Reserved]
§ 63.6(i)(16)		Yes.	
§ 63.6(j)	Exemption from Compliance	Yes.	
§ 63.7(a)	Applicability and Performance Test Dates.	Yes	Except § 63.1511 establishes dates for initial performance tests.
§ 63.7(b)	Notification of Performance Test.	Yes.	
§ 63.7(c)	Quality Assurance Program	Yes.	
§ 63.7(d)	Performance Testing Facilities	Yes.	
§ 63.7(e)(1)	Conduct of Performance Tests	No.	
§ 63.7(e)(2)		Yes.	
§ 63.7(e)(3)		Yes.	
§ 63.7(f)	Use of an Alternative Test Method.	Yes.	
§ 63.7(g)(1)–(3)	Data Analysis, Recordkeeping, and Reporting.	Yes	Except for § 63.7(g)(2), which is reserved.
§ 63.7(h)(1)–(5)	Waiver of Performance Tests	Yes.	
§ 63.8(a)(1)	Applicability for Monitoring Requirements.	Yes.	
§ 63.8(a)(2)		Yes.	
§ 63.8(a)(3)		No	[Reserved]
§ 63.8(a)(4)		Yes.	
§ 63.8(b)	Conduct of Monitoring	Yes.	
§ 63.8(c)(1)(i)	Operation and Maintenance of Continuous Monitoring Systems (CMS).	No	See § 63.1506(a)(5) for general duty requirement.
§ 63.8(c)(1)(ii)		Yes.	
§ 63.8(c)(1)(iii)		No.	
§ 63.8(c)(2)–(8)		Yes.	
§ 63.8(d)(1)–(2)	Quality Control Program	Yes.	
§ 63.8(d)(3)		Yes, except for last sentence, which refers to an SSM plan. SSM plans are not required.	
§ 63.8(e)	Performance Evaluation of CMS.	Yes.	
§ 63.8(f)(1)–(5)	Use of an Alternative Monitoring Method.	No	§ 63.1501(w) includes provisions for monitoring alternatives.
§ 63.8(f)(6)	Alternative to the Relative Accuracy Test.	Yes.	
§ 63.8(g)(1)	Reduction of Monitoring Data	Yes.	
§ 63.8(g)(2)		No	§ 63.1512 requires five 6-minute averages for an aluminum scrap shredder.
§ 63.8(g)(3)–(5)		Yes.	
§ 63.9(a)	Applicability and General Information for Notification Requirements.	Yes.	
§ 63.9(b)(1)–(5)	Initial Notifications	Yes	Except § 63.9(b)(3) is reserved.
§ 63.9(c)	Request for Compliance Extension.	Yes.	
§ 63.9(d)	Notification that Source is Subject to Special Compliance Requirements.	Yes.	
§ 63.9(e)	Notification of Performance Test.	Yes.	
§ 63.9(f)	Notification of Opacity and Visible Emission Observations.	Yes.	

sfrattini on LAPJZKW1R2 with $$_JOB
VerDate Sep<11>2014 09:16 Apr 04, 2023 Jkt 256165 PO 00000 Frm 00121 Fmt 8010 Sfmt 8002 Q:\40\256165.XXX PC31

Citation	Requirement	Applies to RRR	Comment
§ 63.9(g)	Additional Notification Requirement for Sources with CMS.	Yes.	
§ 63.9(h)(1)–(3)	Notification of Compliance Status.	Yes	Except § 63.1515 establishes dates notification of compliance status reports.
§ 63.9(h)(4)		No	[Reserved]
§ 63.9(h)(5)–(6)		Yes.	
§ 63.9(i)	Adjustment of Deadlines for Required Communications.	Yes.	
§ 63.9(j)	Change in Information Already Provided.	Yes.	
§ 63.9(k)	Electronic reporting procedures.	Yes	Only as specified in § 63.9(j).
§ 63.10(a)	Applicability and General Information for Recordkeeping and Reporting Requirements.	Yes.	
§ 63.10(b)(1)	General Recordkeeping Requirements.	Yes.	
§ 63.10(b)(2)(i), (ii), (iv), (v)		No.	
§ 63.10(b)(2)(iii), (vi)–(xiv)		Yes	§ 63.1517 includes additional requirements.
§ 63.10(b)(3)	Recordkeeping Requirement for Applicability Determinations.	Yes.	
§ 63.10(c)(1)	Additional Recordkeeping Requirements for Sources with CMS.	Yes.	
§ 63.10(c)(2)–(4)		No	[Reserved]
§ 63.10(c)(5)		Yes.	
§ 63.10(c)(6)		Yes.	
§ 63.10(c)(7)–(8)		Yes.	
§ 63.10(c)(9)		No	[Reserved]
§ 63.10(c)(10)–(13)		Yes.	
§ 63.10(c)(14)		Yes.	
§ 63.10(c)(15)		No.	
§ 63.10(d)(1)	General Reporting Requirements.	Yes.	
§ 63.10(d)(2)	Reporting Results of Performance Tests.	Yes.	
§ 63.10(d)(3)	Reporting Results of Opacity or Visible Emission Observations.	Yes.	
§ 63.10(d)(4)	Progress Reports	No	See § 63.1516(d).
§ 63.10(d)(5)	Periodic Startup, Shutdown, and Malfunction Reports.	No	See § 63.1516(d).
§ 63.10(e)(1)–(2)	Additional Reporting Requirements for Sources with CMS.	Yes.	
§ 63.10(e)(3)	Excess Emissions and CMS Performance Report and Summary Report.	Yes	Reporting deadline given in § 63.1516.
§ 63.10(e)(4)	Continuous Opacity Monitoring System (COMS) Data Produced During a Performance Test.	Yes.	
§ 63.10(f)	Waiver of Recordkeeping or Reporting Requirements.	Yes.	
§ 63.11(a)–(e)	Control Device and Work Practice Requirements.	No	Flares not applicable.
§ 63.12(a)–(c)	State Authority and Delegations.	Yes	EPA retains authority for applicability determinations.
§ 63.13	Addresses	Yes.	
§ 63.14	Incorporations by Reference	Yes	ACGIH Guidelines, ASTM D7520–13, and Interim Procedures for Estimating Risks Associated with Exposures to Mixtures of Chlorinated Dibenzo-p-Dioxins and -Dibenzofurans (CDDs and CDFs) and 1989 Update.
§ 63.15	Availability of Information and Confidentiality.	Yes.	
§ 63.16	Performance Track Provisions	No.	

sfrattini on LAPJZKW1R2 with $$_JOB
VerDate Sep<11>2014 09:16 Apr 04, 2023 Jkt 256165 PO 00000 Frm 00122 Fmt 8010 Sfmt 8026 Q:\40\256165.XXX PC31

[81 FR 38093, June 13, 2016, as amended at 85 FR 73901, Nov. 19, 2020]

Subpart SSS [Reserved]

Subpart TTT—National Emission Standards for Hazardous Air Pollutants for Primary Lead Smelting

SOURCE: 64 FR 30204, June 4, 1999, unless otherwise noted.

§63.1541 Applicability.

(a) The provisions of this subpart apply to any facility engaged in producing lead metal from ore concentrates. The category includes, but is not limited to, the following smelting processes: Sintering, reduction, preliminary treatment, refining and casting operations, process fugitive sources, and fugitive dust sources. The sinter process includes an updraft or downdraft sintering machine. The reduction process includes the blast furnace, electric smelting furnace with a converter or reverberatory furnace, and slag fuming furnace process units. The preliminary treatment process includes the drossing kettles and dross reverberatory furnace process units. The refining process includes the refinery process unit. The provisions of this subpart do not apply to secondary lead smelters, lead refiners, or lead remelters.

(b) Table 1 of this subpart specifies the provisions of subpart A of this part that apply and those that do not apply to owners and operators of primary lead processors.

[76 FR 70852, Nov. 15, 2011]

§63.1542 Definitions.

Terms used in this subpart are defined in the Act, in subpart A of this part, or in this section as follows:

Affirmative defense means, in the context of an enforcement proceeding, a response or defense put forward by a defendant, regarding which the defendant has the burden of proof, and the merits of which are independently and objectively evaluated in a judicial or administrative proceeding.

Bag leak detection system means a system that is capable of continuously monitoring relative particulate matter (dust) loadings in the exhaust of a baghouse in order to detect bag leaks and other upset conditions. A bag leak detection system includes, but is not limited to, an instrument that operates on triboelectric, light scattering, light transmittance, or other effect to continuously monitor relative particulate matter loadings.

Blast furnace means any reduction furnace to which sinter is charged and which forms separate layers of molten slag and lead bullion.

Building means a roofed and walled structure with limited openings to allow access and egress for people and vehicles.

Charging location means the physical opening through which raw materials are introduced into a sinter machine, blast furnace, or dross furnace.

Dross furnace means any smelting furnace to which drosses are charged and which chemically and physically separates lead from other impurities.

Drossing and refining kettle means an open-top vessel that is constructed of cast iron or steel and is indirectly heated from below and contains molten lead for the purpose of drossing, refining, or alloying lead. Included are pot furnaces, receiving kettles, and holding kettles.

Fugitive dust source means a stationary source of hazardous air pollutant emissions at a primary lead processor resulting from the handling, storage, transfer, or other management of lead-bearing materials where the source is not part of a specific process, process vent, or stack. Fugitive dust sources include roadways, storage piles, materials handling transfer points, and materials transport areas.

Furnace area means any area of a primary lead processor in which a blast furnace or dross furnace is located.

Lead refiner means any facility that refines lead metal that is not located at a primary lead processor.

Lead remelter means any facility that remelts lead metal that is not located at a primary lead processor.

Malfunction means any sudden, infrequent, and not reasonably preventable

sfrattini on LAPJZKW1R2 with $$_JOB
VerDate Sep<11>2014 09:16 Apr 04, 2023 Jkt 256165 PO 00000 Frm 00123 Fmt 8010 Sfmt 8010 Q:\40\256165.XXX PC31

failure of air pollution control and monitoring equipment, process equipment, or a process to operate in a normal or usual manner which causes, or has the potential to cause, the emission limitations in an applicable standard to be exceeded. Failures that are caused in part by poor maintenance or careless operation are not malfunctions.

Materials storage and handling area means any area of a primary lead processor in which lead-bearing materials (including ore concentrate, sinter, granulated lead, dross, slag, and flue dust) are stored or handled between process steps, including areas in which materials are stored in piles, bins, or tubs, and areas in which material is prepared for charging to a sinter machine or smelting furnace or other lead processing operation.

Operating time means the period of time in hours that an affected source is in operation beginning at a startup and ending at the next shutdown.

Plant operating time means the period of time in hours that either a sinter machine or blast furnace is in operation.

Plant roadway means any area of a primary lead processor that is subject to vehicle traffic, including traffic by forklifts, front-end loaders, or vehicles carrying ore concentrates or cast lead ingots. Excluded from this definition are employee and visitor parking areas, provided they are not subject to traffic by vehicles carrying lead-bearing materials.

Primary lead processor means any facility engaged in the production of lead metal from lead sulfide ore concentrates through the use of pyrometallurgical or other techniques.

Process fugitive source means a source of hazardous air pollutant emissions at a primary lead processor that is associated with lead smelting, processing or refining but is not the primary exhaust stream and is not a fugitive dust source. Process fugitive sources include sinter machine charging locations, sinter machine discharge locations, sinter crushing and sizing equipment, furnace charging locations, furnace taps, and drossing kettle and refining kettle charging or tapping locations.

Refining and casting area means any area of a primary lead processor in which drossing or refining operations occur, or casting operations occur.

Secondary lead smelter means any facility at which lead-bearing scrap material, primarily, but not limited to, lead-acid batteries, is recycled into elemental lead or lead alloys by smelting.

Shutdown means the cessation of operation of an affected source for any purpose.

Sinter machine means any device in which a lead sulfide ore concentrate charge is heated in the presence of air to eliminate sulfur contained in the charge and to agglomerate the charge into a hard porous mass called sinter.

Sinter machine area means any area of a primary lead processor where a sinter machine, or sinter crushing and sizing equipment is located.

Sinter machine discharge end means the physical opening at the end of a sinter machine where the sinter exits the sinter machine.

Startup means the setting in operation of an affected source for any purpose.

Tapping location means the opening thru which lead and slag are removed from the furnace.

Tapping location means the opening through which lead and slag are removed from the furnace.

[64 FR 30204, June 4, 1999, as amended at 71 FR 20462, Apr. 20, 2006; 76 FR 70852, Nov. 15, 2011]

§ 63.1543 Standards for process and process fugitive sources.

(a) No owner or operator of any existing, new, or reconstructed primary lead processor shall discharge or cause to be discharged into the atmosphere lead compounds in excess of 0.97 pounds per ton of lead metal produced from the aggregation of emissions discharged from air pollution control devices used to control emissions from the sources listed in paragraphs (a)(1) through (9) of this section.

(1) Sinter machine;

(2) Blast furnace;

(3) Dross furnace;

(4) Dross furnace charging location;

(5) Blast furnace and dross furnace tapping location;

(6) Sinter machine charging location;

sfrattini on LAPJZKW1R2 with $$_JOB
VerDate Sep<11>2014 09:16 Apr 04, 2023 Jkt 256165 PO 00000 Frm 00124 Fmt 8010 Sfmt 8010 Q:\40\256165.XXX PC31

(7) Sinter machine discharge end;

(8) Sinter crushing and sizing equipment; and

(9) Sinter machine area.

(b) No owner or operator of any existing, new, or reconstructed primary lead processor shall discharge or cause to be discharged into the atmosphere lead compounds in excess of 1.2 tons per year from the aggregation of the air pollution control devices used to control emissions from furnace area and refining and casting operations.

(c) The process fugitive sources listed in paragraphs (a)(4) through (8) of this section must be equipped with a hood and must be ventilated to a baghouse or equivalent control device. The hood design and ventilation rate must be consistent with American Conference of Governmental Industrial Hygienists recommended practices.

(d) The sinter machine area must be enclosed in a building that is ventilated to a baghouse or equivalent control device at a rate that maintains a positive in-draft through any doorway opening.

(e) Except as provided in paragraph (f) of this section, following the initial tests to demonstrate compliance with paragraphs (a) and (b) of this section, the owner or operator of a primary lead processor must conduct compliance tests for lead compounds on a quarterly basis (no later than 100 days following any previous compliance test).

(f) If the 12 most recent compliance tests demonstrate compliance with the emission limit specified in paragraphs (a) and (b) of this section, the owner or operator of a primary lead processor shall be allowed up to 12 calendar months from the last compliance test to conduct the next compliance test for lead compounds.

(g) The owner or operator of a primary lead processor must maintain and operate each baghouse used to control emissions from the sources listed in paragraphs (a)(1) through (9) and (b) of this section such that the alarm on a bag leak detection system required under §63.1547(c)(8) does not sound for more than five percent of the total operating time in a 6-month reporting period.

(h) The owner or operator of a primary lead processor must record the date and time of a bag leak detection system alarm and initiate procedures to determine the cause of the alarm according to the corrective action plan required under §63.1547(f) within 1 hour of the alarm. The cause of the alarm must be corrected as soon as practicable.

(i) At all times, the owner or operator must operate and maintain any affected source, including associated air pollution control equipment and monitoring equipment, in a manner consistent with safety and good air pollution control practices for minimizing emissions. Determination of whether such operation and maintenance procedures are being used will be based on information available to the Administrator which may include, but is not limited to, monitoring results, review of operation and maintenance procedures, review of operation and maintenance records, and inspection of the source.

[76 FR 70853, Nov. 15, 2011]

§63.1544 Standards for fugitive dust sources.

(a) Each owner or operator of a primary lead processor must prepare, and at all times operate according to, a standard operating procedures manual that describes in detail the measures that will be put in place to control fugitive dust emissions from the sources listed in paragraphs (a)(1) through (a)(5) of this section that incorporates each of the specific work practices listed in paragraphs (a)(1) through (a)(5) of this section:

(1) *Plant roadways.* (i) Paved plant roadways must be cleaned using a wet sweeper unless the temperature falls below 39 degrees Fahrenheit or when the application of water results in the formation of ice. During periods when the temperature is below 39 degrees Fahrenheit, paved plant roadways must be cleaned using a high efficiency dry sweeper.

(ii) Continuously operate a sprinkler system to wet plant roadways to prevent fugitive dust entrainment. This sprinkler system must be operated except during periods when the temperature is less than 39 degrees Fahrenheit or when the application of water results in formation of ice.

sfrattini on LAPJZKW1R2 with $$_JOB
VerDate Sep<11>2014 09:16 Apr 04, 2023 Jkt 256165 PO 00000 Frm 00125 Fmt 8010 Sfmt 8010 Q:\40\256165.XXX PC31

(2) *Material storage and handling area(s).* (i) Chemically stabilize inactive concentrate storage piles a minimum of once every month to reduce particulate from wind born re-suspension.

(ii) Finished sinter must be sufficiently wetted to ensure fugitive dust emissions are minimized prior to loading to railcars.

(3) *Sinter machine area(s).* (i) Personnel doors must be kept closed during operations except when entering or exiting the furnace building by the aid of door weights or similar device for automatic closure.

(ii) Large equipment doors must remain closed except when entering or existing the building using an automatic closure system or equivalent lock-and-key method.

(iii) It may be necessary to open doors subject to the requirements in § 63.1544(a)(3)(i) and (ii) to prevent heat stress or exhaustion of workers inside the sinter plant building. Records of such periods must be included in the report required under § 63.1549(e)(8).

(4) *Furnace area(s).* (i) Personnel doors must be kept closed during operations except when entering or exiting the furnace building by the aid of door weights or similar device for automatic closure.

(ii) Large equipment doors must remain closed except when entering or existing the building using an automatic closure system or equivalent lock-and-key method.

(iii) It may be necessary to open doors subject to the requirements in § 63.1544(a)(4)(i) and (ii) to prevent heat stress or exhaustion of workers inside the blast furnace building. Records of such periods must be included in the report required under § 63.1549(e)(8).

(5) *Refining and casting area(s).* (i) Personnel doors must be kept closed during operations except when entering or exiting the furnace building by the aid of door weights or similar device for automatic closure.

(ii) Large equipment doors must remain closed except when entering or existing the building using an automatic closure system or equivalent lock-and-key method.

(iii) It may be necessary to open doors subject to the requirements in § 63.1544(a)(5)(i) and (ii) to prevent heat stress or exhaustion of workers inside the refining and casting building. Records of such periods must be included in the report required under § 63.1549(e)(8).

(b) Notwithstanding paragraph (c) of this section, the standard operating procedures manual shall be submitted to the Administrator or delegated authority for review and approval.

(c) Existing manuals that describe the measures in place to control fugitive dust sources required as part of a State implementation plan for lead shall satisfy the requirements of paragraph (a) of this section provided they include all the work practices as described in paragraphs (a)(1) through (5) of this section and provided they address all the sources listed in paragraphs (a)(1) through (5) of this section.

(d) At all times, the owner or operator must operate and maintain any affected source, including associated air pollution control equipment and monitoring equipment, in a manner consistent with safety and good air pollution control practices for minimizing emissions. Determination of whether such operation and maintenance procedures are being used will be based on information available to the Administrator which may include, but is not limited to, monitoring results, review of operation and maintenance procedures, review of operation and maintenance records, and inspection of the source.

[76 FR 70853, Nov. 15, 2011]

§ 63.1545 Compliance dates.

(a) Each owner or operator of an existing primary lead processor must achieve compliance with the requirements in § 16.1543(a) no later than January 17, 2012. Each owner or operator of an existing primary lead processor must achieve compliance with the requirements of § 63.1544 no later than February 13, 2012. Each owner or operator of an existing primary lead processor must achieve compliance with the requirements in § 63.1543(b) and (e) of this subpart no later than November 15, 2013.

(b) Each owner or operator of a new primary lead processor must achieve compliance with the requirements of

sfrattini on LAPJZKW1R2 with $$_JOB
VerDate Sep<11>2014 09:16 Apr 04, 2023 Jkt 256165 PO 00000 Frm 00126 Fmt 8010 Sfmt 8010 Q:\40\256165.XXX PC31

this subpart no later than January 17, 2012 or startup, whichever is later.

(c) Prior to the dates specified in §63.1545(a), each owner or operator of an existing primary lead processor must continue to comply with the requirements of §§63.1543 and 63.1544 as promulgated in the June 4, 1999 NESHAP for Primary Lead Smelting.

(d) Each owner or operator of an existing primary lead processor must comply with the requirements of §§63.1547(g)(1) and (2), 63.1551, and Table 1 of Subpart TTT of Part 63 on November 15, 2011.

[76 FR 70854, Nov. 15, 2011]

§63.1546 Performance testing.

(a) The following procedures must be used to determine quarterly compliance with the emissions standard for lead compounds under §63.1543(a) and (b) for existing sources:

(1) Each owner or operator of existing sources listed in §63.1543(a)(1) through (9) and (b) must determine the lead compound emissions rate, in units of pounds of lead per hour according to the following test methods in appendix A of part 60 of this chapter:

(i) Method 1 must be used to select the sampling port location and the number of traverse points.

(ii) Method 2, 2F, 2G must be used to measure volumetric flow rate.

(iii) Method 3, 3A, 3B must be used for gas analysis.

(iv) Method 4 must be used to determine moisture content of the stack gas.

(v) Method 12 or Method 29 must be used to determine lead emissions rate of the stack gas.

(2) A performance test shall consist of at least three runs. For each test run with Method 12 or Method 29, the minimum sample time must be 60 minutes and the minimum volume must be 1 dry standard cubic meter (35 dry standard cubic feet).

(3) Performance tests shall be completed quarterly, once every 3 months, to determine compliance.

(4) The lead emission rate in pounds per quarter is calculated by multiplying the quarterly lead emission rate in pounds per hour by the quarterly plant operating time, in hours as shown in Equation 1:

$$E_{Pb} = ER_{Pb} \times QPOT \qquad \text{(Eq. 1)}$$

Where:

E_{Pb} = quarterly lead emissions, pounds per quarter;

ER_{Pb} = quarterly lead emissions rate, pounds per hour; and

QPOT = quarterly plant operating time, hours per quarter.

(5) The lead production rate, in units of tons per quarter, must be determined based on production data for the previous quarter according to the procedures detailed in paragraphs (a)(5)(i) through (iv) of this section:

(i) Total lead products production multiplied by the fractional lead content must be determined in units of tons.

(ii) Total copper matte production multiplied by the fractional lead content must be determined in units of tons.

(iii) Total copper speiss production multiplied by the fractional lead content must be determined in units of tons.

(iv) Total quarterly lead production must be determined by summing the values obtained in paragraphs (a)(5)(i) through (iii) of this section.

(6) To determine compliance with the production-based lead compound emission rate in §63.1543(a), the quarterly production-based lead compound emission rate, in units of pounds of lead emissions per ton of lead produced, is calculated as shown in Equation 2 by dividing lead emissions by lead production.

sfrattini on LAPJZKW1R2 with $$_JOB
VerDate Sep<11>2014 09:16 Apr 04, 2023 Jkt 256165 PO 00000 Frm 00127 Fmt 8010 Sfmt 8010 Q:\40\256165.XXX PC31
ER15NO11.000<GPH>

$$CE_{Pb} = \frac{E_{Pb}}{P_{Pb}} \qquad \text{(Eq. 2)}$$

Where:

CE_{Pb} = quarterly production-based lead compound emission rate, in units of pounds of lead emissions per ton of lead produced;

E_{Pb} = quarterly lead emissions, pounds per quarter; and

P_{Pb} = quarterly lead production, tons per quarter.

(7) To determine quarterly compliance with the emissions standard for lead compounds under § 63.1543(b), sum the lead compound emission rates for the current and previous three quarters for the sources in § 63.1543(b), as determined in accordance with paragraphs (a)(1) through (4) of this section.

(b) Owners and operators must perform an initial compliance test to demonstrate compliance with the sinter building in-draft requirements of § 63.1543(d) at each doorway opening in accordance with paragraphs (b)(1) through (4) of this section.

(1) Use a propeller anemometer or equivalent device.

(2) Determine doorway in-draft by placing the anemometer in the plane of the doorway opening near its center.

(3) Determine doorway in-draft for each doorway that is open during normal operation with all remaining doorways in their customary position during normal operation.

(4) Do not determine doorway in-draft when ambient wind speed exceeds 2 meters per second.

(c) Performance tests shall be conducted under such conditions as the Administrator specifies to the owner or operator based on representative performance of the affected source for the period being tested. Upon request, the owner or operator shall make available to the Administrator such records as may be necessary to determine the conditions of performance tests.

[76 FR 70854, Nov. 15, 2011]

§ 63.1547 Monitoring requirements.

(a) Owners and operators of primary lead processors must prepare, and at all times operate according to, a standard operating procedures manual that describes in detail the procedures for inspection, maintenance, and bag leak detection and corrective action for all baghouses that are used to control process, process fugitive, or fugitive dust emissions from any source subject to the lead emission standards in §§ 63.1543 and 63.1544, including those used to control emissions from general ventilation systems.

(b) The standard operating procedures manual for baghouses required by paragraph (a) of this section must be submitted to the Administrator or delegated authority for review and approval.

(c) The procedures specified in the standard operating procedures manual for inspections and routine maintenance must, at a minimum, include the requirements of paragraphs (c)(1) through (8) of this section.

(1) Weekly confirmation that dust is being removed from hoppers through visual inspection or equivalent means of ensuring the proper functioning of removal mechanisms.

(2) Daily check of compressed air supply for pulse-jet baghouses.

(3) An appropriate methodology for monitoring cleaning cycles to ensure proper operation.

(4) Monthly check of bag cleaning mechanisms for proper functioning through visual inspection or equivalent means.

(5) Quarterly visual check of bag tension on reverse air and shaker-type baghouses to ensure that bags are not kinked (kneed or bent) or laying on their sides. Such checks are not required for shaker-type baghouses using self-tensioning (spring loaded) devices.

(6) Quarterly confirmation of the physical integrity of the baghouse through visual inspection of the baghouse interior for air leaks.

(7) Quarterly inspection of fans for wear, material buildup, and corrosion through visual inspection, vibration detectors, or equivalent means.

sfrattini on LAPJZKW1R2 with $$_JOB
VerDate Sep<11>2014 09:16 Apr 04, 2023 Jkt 256165 PO 00000 Frm 00128 Fmt 8010 Sfmt 8010 Q:\40\256165.XXX PC31
ER15NO11.001<GPH>

(8) Except as provided in paragraph (h) of this section, continuous operation of a bag leak detection system.

(d) The procedures specified in the standard operating procedures manual for maintenance must, at a minimum, include a preventative maintenance schedule that is consistent with the baghouse manufacturer's instructions for routine and long-term maintenance.

(e) The bag leak detection system required by paragraph (c)(8) of this section must meet the specifications and requirements of (e)(1) through (8) of this section.

(1) The bag leak detection system must be certified by the manufacturer to be capable of detecting particulate matter emissions at concentrations of 10 milligram per actual cubic meter (0.0044 grains per actual cubic foot) or less.

(2) The bag leak detection system sensor must provide output of relative particulate matter loadings, and the owner or operator must continuously record the output from the bag leak detection system.

(3) The bag leak detection system must be equipped with an alarm system that will sound when an increase in relative particulate loading is detected over a preset level, and the alarm must be located such that it can be heard or otherwise determined by the appropriate plant personnel.

(4) Each bag leak detection system that works based on the triboelectric effect must be installed, calibrated, and maintained in a manner consistent with guidance provided in the U.S. Environmental Protection Agency guidance document ''Fabric Filter Bag Leak Detection Guidance'' (EPA–454/R–98–015). Other bag leak detection systems must be installed, calibrated, and maintained in a manner consistent with the manufacturer's written specifications and recommendations.

(5) The initial adjustment of the system must, at a minimum, consist of establishing the baseline output by adjusting the sensitivity (range) and the averaging period of the device, and establishing the alarm set points and the alarm delay time.

(6) Following initial adjustment, the owner or operator must not adjust the sensitivity or range, averaging period, alarm set points, or alarm delay time, except as detailed in the approved SOP required under paragraph (a) of this section. In no event shall the sensitivity be increased by more than 100 percent or decreased more than 50 percent over a 365-day period unless a responsible official certifies that the baghouse has been inspected and found to be in good operating condition.

(7) For negative pressure, induced air baghouses, and positive pressure baghouses that are discharged to the atmosphere through a stack, the bag leak detector must be installed downstream of the baghouse and upstream of any wet acid gas scrubber.

(8) Where multiple detectors are required, the system's instrumentation and alarm may be shared among detectors.

(f) The standard operating procedures manual required by paragraph (a) of this section must include a corrective action plan that specifies the procedures to be followed in the event of a bag leak detection system alarm. The corrective action plan must include at a minimum, procedures to be used to determine the cause of an alarm, as well as actions to be taken to minimize emissions, which may include, but are not limited to, the following.

(1) Inspecting the baghouse for air leaks, torn or broken bags or filter media, or any other condition that may cause an increase in emissions.

(2) Sealing off defective bags or filter media.

(3) Replacing defective bags or filter media, or otherwise repairing the control device.

(4) Sealing off a defective baghouse compartment.

(5) Cleaning the bag leak detection system probe, or otherwise repairing or maintaining the bag leak detection system.

(6) Shutting down the process producing the particulate emissions.

(g) The percentage of total operating time the alarm on the bag leak detection system sounds in a 6-month reporting period must be calculated in order to determine compliance with the five percent operating limit in §63.1543(g). The percentage of time the alarm on the bag leak detection system

sfrattini on LAPJZKW1R2 with $$_JOB
VerDate Sep<11>2014 09:16 Apr 04, 2023 Jkt 256165 PO 00000 Frm 00129 Fmt 8010 Sfmt 8010 Q:\40\256165.XXX PC31

sounds must be determined according to paragraphs (g)(1) through (3) of this section.

(1) For each alarm where the owner or operator initiates procedures to determine the cause of an alarm within 1 hour of the alarm, 1 hour of alarm time must be counted.

(2) For each alarm where the owner or operator does not initiate procedures to determine the cause of the alarm within 1 hour of the alarm, alarm time will be counted as the actual amount of time taken by the owner or operator to initiate procedures to determine the cause of the alarm.

(3) The percentage of time the alarm on the bag leak detection system sounds must be calculated as the ratio of the sum of alarm times to the total operating time multiplied by 100.

(h) Baghouses equipped with HEPA filters as a secondary filter used to control process or process fugitive sources subject to the lead emission standards in § 63.1543 are exempt from the requirement in paragraph (c)(8) of this section to be equipped with a bag leak detector. The owner or operator of an affected source that uses a HEPA filter must monitor and record the pressure drop across the HEPA filter system daily. If the pressure drop is outside the limit(s) specified by the filter manufacturer, the owner or operator must take appropriate corrective measures, which may include, but not be limited to, the following:

(1) Inspecting the filter and filter housing for air leaks and torn or broken filters.

(2) Replacing defective filter media, or otherwise repairing the control device.

(3) Sealing off a defective control device by routing air to other comparable control devices.

(4) Shutting down the process producing the particulate emissions.

(i) Owners and operators must monitor sinter machine building in-draft to demonstrate continued compliance with the operating standard specified in § 63.1543(d) in accordance with either paragraph (i)(1), (2), or (3) of this section.

(1) Owners and operators must check and record on a daily basis doorway in-draft at each doorway in accordance with the methodology specified in § 63.1546(b).

(2) Owners and operators must establish and maintain baseline ventilation parameters which result in a positive in-draft according to paragraphs (i)(2)(i) through (iv) of this section.

(i) Owners and operators must install, calibrate, maintain, and operate a monitoring device that continuously records the volumetric flow rate through each separately ducted hood; or install, calibrate, maintain, and operate a monitoring device that continuously records the volumetric flow rate at the control device inlet of each exhaust system ventilating the building. The flow rate monitoring device(s) can be installed in any location in the exhaust duct such that reproducible flow rate measurements will result. The flow rate monitoring device(s) must have an accuracy of plus or minus 10 percent over the normal process operating range and must be calibrated according to manufacturer's instructions.

(ii) During the initial demonstration of sinter building in-draft, and at any time the owner or operator wishes to re-establish the baseline ventilation parameters, the owner or operator must continuously record the volumetric flow rate through each separately ducted hood, or continuously record the volumetric flow rate at the control device inlet of each exhaust system ventilating the building and record exhaust system damper positions. The owner or operator must determine the average volumetric flow rate(s) corresponding to the period of time the in-draft compliance determinations are being conducted.

(iii) The owner or operator must maintain the volumetric flow rate(s) at or above the value(s) established during the most recent in-draft determination at all times the sinter machine is in operation. Volumetric flow rate(s) must be calculated as a 15-minute average.

(iv) If the volumetric flow rate is monitored at the control device inlet, the owner or operator must check and record damper positions daily to ensure they are in the positions they were in

sfrattini on LAPJZKW1R2 with $$_JOB
VerDate Sep<11>2014 09:16 Apr 04, 2023 Jkt 256165 PO 00000 Frm 00130 Fmt 8010 Sfmt 8010 Q:\40\256165.XXX PC31

during the most recent in-draft determination.

(3) An owner or operator may request an alternative monitoring method by following the procedures and requirements in §63.8(f) of the General Provisions.

(j) Each owner or operator of new or modified sources listed under §63.1543 (a)(1) through (9) and (b) must install, calibrate, maintain, and operate a continuous emission monitoring system (CEMS) for measuring lead emissions and a continuous emission rate monitoring system (CERMS) subject to Performance Specification 6 of appendix B to part 60.

(1) Each owner or operator of a source subject to the emissions limits for lead compounds under §63.1543(a)and (b) must install a CEMS for measuring lead emissions within 180 days of promulgation of performance specifications for lead CEMS.

(i) Prior to promulgation of performance specifications for CEMS used to measure lead concentrations, an owner or operator must use the procedure described in §63.1546(a)(1) through (7) of this section to determine compliance.

(2) If a CEMS used to measure lead emissions is applicable, the owner or operator must install a CERMS with a sensor in a location that provides representative measurement of the exhaust gas flow rate at the sampling location of the CEMS used to measure lead emissions, taking into account the manufacturer's recommendations. The flow rate sensor is that portion of the system that senses the volumetric flow rate and generates an output proportional to that flow rate.

(i) The CERMS must be designed to measure the exhaust gas flow rate over a range that extends from a value of at least 20 percent less than the lowest expected exhaust flow rate to a value of at least 20 percent greater than the highest expected exhaust gas flow rate.

(ii) The CERMS must be equipped with a data acquisition and recording system that is capable of recording values over the entire range specified in paragraph (j)(2)(i) of this section.

(iii) Each owner or operator must perform an initial relative accuracy test of the CERMS in accordance with the applicable Performance Specification in appendix B to part 60 of the chapter.

(iv) Each owner or operator must operate the CERMS and record data during all periods of operation of the affected facility including periods of startup, shutdown, and malfunction, except for periods of monitoring system malfunctions, repairs associated with monitoring system malfunctions, and required monitoring system quality assurance or quality control activities (including, as applicable, calibration checks and required zero and span adjustments.

(3) Each owner or operator must calculate the lead emissions rate in tons per year by summing all hours of CEMS data for a year to determine compliance with §63.1543(b).

(i) When the CERMS are unable to provide quality assured data the following applies:

(A) When data are not available for periods of up to 48 hours, the highest recorded hourly emission rate from the previous 24 hours must be used.

(B) When data are not available for 48 or more hours, the maximum daily emission rate based on the previous 30 days must be used.

[76 FR 70855, Nov. 15, 2011]

§63.1548 Notification requirements.

(a) The owner or operator of a primary lead processor must comply with the notification requirements of §63.9 of subpart A, General Provisions as specified in Table 1 of this subpart.

(b) The owner or operator of a primary lead processor must submit the standard operating procedures manual for baghouses required under §63.1547(a) to the Administrator or delegated authority along with a notification that the primary lead processor is seeking review and approval of the manual and procedures. Owners or operators of existing primary lead processors must submit this notification no later than November 6, 2000. The owner or operator of a primary lead processor that commences construction or reconstruction after April 17, 1998, must submit this notification no later than 180 days

sfrattini on LAPJZKW1R2 with $$_JOB
VerDate Sep<11>2014 09:16 Apr 04, 2023 Jkt 256165 PO 00000 Frm 00131 Fmt 8010 Sfmt 8010 Q:\40\256165.XXX PC31

before startup of the constructed or reconstructed primary lead processor, but no sooner than September 2, 1999.

[76 FR 70857, Nov. 15, 2011]

§ 63.1549 Recordkeeping and reporting requirements.

(a) The owner or operator of a primary lead processor must comply with the recordkeeping requirements of § 63.10 of subpart A, General Provisions as specified in Table 1 of this subpart.

(b) In addition to the general records required by paragraph (a) of this section, each owner or operator of a primary lead processor must maintain for a period of 5 years, records of the information listed in paragraphs (b)(1) through (10) of this section.

(1) Production records of the weight and lead content of lead products, copper matte, and copper speiss.

(2) Records of the bag leak detection system output.

(3) An identification of the date and time of all bag leak detection system alarms, the time that procedures to determine the cause of the alarm were initiated, the cause of the alarm, an explanation of the actions taken, and the date and time the cause of the alarm was corrected.

(4) Any recordkeeping required as part of the practices described in the standard operating procedures manual for baghouses required under § 63.1547(a).

(5) If an owner or operator chooses to demonstrate continuous compliance with the sinter building in-draft requirement under § 63.1543(d) by employing the method allowed in § 63.1547(i)(1), the records of the daily doorway in-draft checks, an identification of the periods when there was not a positive in-draft, and an explanation of the corrective actions taken.

(6) If an owner or operator chooses to demonstrate continuous compliance with the sinter building in-draft requirement under § 63.1543(d) by employing the method allowed in § 63.1547(i)(2), the records of the output from the continuous volumetric flow monitor(s), an identification of the periods when the 15-minute volumetric flow rate dropped below the minimum established during the most recent in-draft determination, and an explanation of the corrective actions taken.

(7) If an owner or operator chooses to demonstrate continuous compliance with the sinter building in-draft requirement under § 63.1543(d) by employing the method allowed in § 63.1547(i)(2), and volumetric flow rate is monitored at the baghouse inlet, records of the daily checks of damper positions, an identification of the days that the damper positions were not in the positions established during the most recent in-draft determination, and an explanation of the corrective actions taken.

(8) Records of the occurrence and duration of each malfunction of operation (*i.e.*, process equipment) or the air pollution control equipment and monitoring equipment.

(9) Records of actions taken during periods of malfunction to minimize emissions in accordance with §§ 63.1543(i) and 63.1544(d), including corrective actions to restore malfunctioning process and air pollution control and monitoring equipment to its normal or usual manner of operation.

(c) Records for the most recent 2 years of operation must be maintained on site. Records for the previous 3 years may be maintained off site.

(d) The owner or operator of a primary lead processor must comply with the reporting requirements of § 63.10 of subpart A, General Provisions as specified in Table 1 of this subpart.

(e) In addition to the information required under § 63.10 of the General Provisions, the owner or operator must provide semi-annual reports containing the information specified in paragraphs (e)(1) through (9) of this section to the Administrator or designated authority.

(1) The reports must include records of all alarms from the bag leak detection system specified in § 63.1547(e).

(2) The reports must include a description of the actions taken following each bag leak detection system alarm pursuant to § 63.1547(f).

(3) The reports must include a calculation of the percentage of time the alarm on the bag leak detection system sounded during the reporting period pursuant to § 63.1547(g).

(4) If an owner or operator chooses to demonstrate continuous compliance

sfrattini on LAPJZKW1R2 with $$_JOB
VerDate Sep<11>2014 09:16 Apr 04, 2023 Jkt 256165 PO 00000 Frm 00132 Fmt 8010 Sfmt 8010 Q:\40\256165.XXX PC31

with the sinter building in-draft requirement under §63.1543(d) by employing the method allowed in §63.1547(i)(1), the reports must contain an identification of the periods when there was not a positive in-draft, and an explanation of the corrective actions taken.

(5) If an owner or operator chooses to demonstrate continuous compliance with the sinter building in-draft requirement under §63.1543(d) by employing the method allowed in §63.1547(i)(2), the reports must contain an identification of the periods when the 15-minute volumetric flow rate(s) dropped below the minimum established during the most recent in-draft determination, and an explanation of the corrective actions taken.

(6) If an owner or operator chooses to demonstrate continuous compliance with the sinter building in-draft requirement under §63.1543(d) by employing the method allowed in §63.1547(i)(2), and volumetric flow rate is monitored at the baghouse inlet, the reports must contain an identification of the days that the damper positions were not in the positions established during the most recent in-draft determination, and an explanation of the corrective actions taken.

(7) The reports must contain a summary of the records maintained as part of the practices described in the standard operating procedures manual for baghouses required under §63.1547(a), including an explanation of the periods when the procedures were not followed and the corrective actions taken.

(8) The reports shall contain a summary of the fugitive dust control measures performed during the required reporting period, including an explanation of any periods when the procedures outlined in the standard operating procedures manual required by §63.1544(a) were not followed and the corrective actions taken. The reports shall not contain copies of the daily records required to demonstrate compliance with the requirements of the standard operating procedures manuals required under §§63.1544(a) and 63.1547(a).

(9) If there was a malfunction during the reporting period, the report shall also include the number, duration, and a brief description for each type of malfunction which occurred during the reporting period and which caused or may have caused any applicable emission limitation to be exceeded. The report must also include a description of actions taken by an owner or operator during a malfunction of an affected source to minimize emissions in accordance with §§63.1543(i) and 63.1544(d), including actions taken to correct a malfunction.

[76 FR 70857, Nov. 15, 2011]

§63.1550 Delegation of authority.

(a) In delegating implementation and enforcement authority to a State under section 112(l) of the act, the authorities contained in paragraph (b) of this section must be retained by the Administrator and not transferred to a State.

(b) Authorities which will not be delegated to States: No restrictions.

[76 FR 70858, Nov. 15, 2011]

§63.1551 Affirmative defense for exceedance of emission limit during malfunction.

In response to an action to enforce the standards set forth in this subpart you may assert an affirmative defense to a claim for civil penalties for exceedances of such standards that are caused by malfunction, as defined at 40 CFR 63.2. Appropriate penalties may be assessed, however, if you fail to meet your burden of proving all of the requirements in the affirmative defense. The affirmative defense shall not be available for claims for injunctive relief.

(a) *Affirmative defense.* To establish the affirmative defense in any action to enforce such a limit, you must timely meet the notification requirements in paragraph (b) of this section, and must prove by a preponderance of evidence that:

(1) The excess emissions:

(i) Were caused by a sudden, infrequent, and unavoidable failure of air pollution control and monitoring equipment, process equipment, or a process to operate in a normal or usual manner, and

(ii) Could not have been prevented through careful planning, proper design

sfrattini on LAPJZKW1R2 with $$_JOB
VerDate Sep<11>2014 09:16 Apr 04, 2023 Jkt 256165 PO 00000 Frm 00133 Fmt 8010 Sfmt 8010 Q:\40\256165.XXX PC31

or better operation and maintenance practices; and

(iii) Did not stem from any activity or event that could have been foreseen and avoided, or planned for; and

(iv) Were not part of a recurring pattern indicative of inadequate design, operation, or maintenance; and

(2) Repairs were made as expeditiously as possible when the applicable emission limitations were being exceeded. Off-shift and overtime labor were used, to the extent practicable to make these repairs; and

(3) The frequency, amount and duration of the excess emissions (including any bypass) were minimized to the maximum extent practicable during periods of such emissions; and

(4) If the excess emissions resulted from a bypass of control equipment or a process, then the bypass was unavoidable to prevent loss of life, personal injury, or severe property damage; and

(5) All possible steps were taken to minimize the impact of the excess emissions on ambient air quality, the environment and human health; and

(6) All emissions monitoring and control systems were kept in operation if at all possible, consistent with safety and good air pollution control practices; and

(7) All of the actions in response to the excess emissions were documented by properly signed, contemporaneous operating logs; and

(8) At all times, the facility was operated in a manner consistent with good practices for minimizing emissions; and

(9) A written root cause analysis has been prepared, the purpose of which is to determine, correct, and eliminate the primary causes of the malfunction and the excess emissions resulting from the malfunction event at issue. The analysis shall also specify, using best monitoring methods and engineering judgment, the amount of excess emissions that were the result of the malfunction.

(b) *Notification*. The owner or operator of the facility experiencing an exceedance of its emission limit(s) during a malfunction shall notify the Administrator by telephone or facsimile (FAX) transmission as soon as possible, but no later than two business days after the initial occurrence of the malfunction, if it wishes to avail itself of an affirmative defense to civil penalties for that malfunction. The owner or operator seeking to assert an affirmative defense shall also submit a written report to the Administrator within 45 days of the initial occurrence of the exceedance of the standards in this subpart to demonstrate, with all necessary supporting documentation, that it has met the requirements set forth in paragraph (a) of this section. The owner or operator may seek an extension of this deadline for up to 30 additional days by submitting a written request to the Administrator before the expiration of the 45 day period. Until a request for an extension has been approved by the Administrator, the owner or operator is subject to the requirement to submit such report within 45 days of the initial occurrence of the exceedance.

[76 FR 70858, Nov. 15, 2011]

TABLE 1 TO SUBPART TTT OF PART 63—GENERAL PROVISIONS APPLICABILITY TO SUBPART TTT

Reference	Applies to subpart TTT	Comment
63.6(a), (b), (c)	Yes.	
63.6(d)	No	Section reserved.
63.6(e)(1)(i)	No	See 63.1543(i) and 63.1544(d) for general duty requirement.
63.6(e)(1)(ii)	No.	
63.6(e)(1)(iii)	Yes.	
63.6(e)(2)	No	Section reserved.
63.6(e)(3)	No.	
63.6(f)(1)	No.	
63.6(g)	Yes.	
63.6(h)	No	No opacity limits in rule.
63.6(i)	Yes.	

sfrattini on LAPJZKW1R2 with $$_JOB
VerDate Sep<11>2014 09:16 Apr 04, 2023 Jkt 256165 PO 00000 Frm 00134 Fmt 8010 Sfmt 8002 Q:\40\256165.XXX PC31

Reference	Applies to subpart TTT	Comment
63.6(j)	Yes.	
§63.7(a)–(d)	Yes.	
§63.7(e)(1)	No	See 63.1546(c).
§63.7(e)(2)–(e)(4)	Yes.	
63.7(f), (g), (h)	Yes.	
63.8(a)–(b)	Yes.	
63.8(c)(1)(i)	No.	
63.8(c)(1)(ii)	Yes.	
63.8(c)(1)(iii)	No.	
63.8(c)(2)–(d)(2)	Yes.	
63.8(d)(3)	Yes, except for last sentence.	
63.8(e)–(g)	Yes.	
63.9(a), (b), (c), (e), (g), (h)(1) through (3), (h)(5) and (6), (i) and (j).	Yes.	
63.9(f)	No.	
63.9(h)(4)	No	Reserved.
63.9(k)	Yes	Only as specified in 63.9(j).
63.10(b)(2)(i)	No.	
63.10(b)(2)(ii)	No	See 63.1549(b)(9) and (10) for recordkeeping of occurrence and duration of malfunctions and recordkeeping of actions taken during malfunction.
63.10(b)(2)(iii)	Yes.	
63.10(b)(2)(iv)–(b)(2)(v)	No.	
63.10(b)(2)(vi)–(b)(2)(xiv)	Yes.	
63.(10)(b)(3)	Yes.	
63.10(c)(1)–(9)	Yes.	
63.10(c)(10)–(11)	No	See 63.1549(b)(9) and (10) for recordkeeping of malfunctions.
63.10(c)(12)–(c)(14)	Yes.	
63.10(c)(15)	No.	
63.10(d)(1)–(4)	Yes.	
63.10(d)(5)	No	See 63.1549(e)(9) for reporting of malfunctions.
63.10(e)–(f)	Yes.	

[76 FR 70858, Nov. 15, 2011, as amended at 85 FR 73901, Nov. 19, 2020]

Subpart UUU—National Emission Standards for Hazardous Air Pollutants for Petroleum Refineries: Catalytic Cracking Units, Catalytic Reforming Units, and Sulfur Recovery Units

SOURCE: 67 FR 17773, Apr. 11, 2002, unless otherwise noted.

WHAT THIS SUBPART COVERS

§63.1560 What is the purpose of this subpart?

This subpart establishes national emission standards for hazardous air pollutants (HAP) emitted from petroleum refineries. This subpart also establishes requirements to demonstrate initial and continuous compliance with the emission limitations and work practice standards.

§63.1561 Am I subject to this subpart?

(a) You are subject to this subpart if you own or operate a petroleum refinery that is located at a major source of HAP emissions.

(1) A petroleum refinery is an establishment engaged primarily in petroleum refining as defined in the Standard Industrial Classification (SIC) code 2911 and the North American Industry Classification (NAIC) code 32411, and used mainly for:

(i) Producing transportation fuels (such as gasoline, diesel fuels, and jet fuels), heating fuels (such as kerosene, fuel gas distillate, and fuel oils), or lubricants;

(ii) Separating petroleum; or

(iii) Separating, cracking, reacting, or reforming an intermediate petroleum stream, or recovering a by-product(s) from the intermediate petroleum stream (e.g., sulfur recovery).

(2) A major source of HAP is a plant site that emits or has the potential to

sfrattini on LAPJZKW1R2 with $$_JOB
VerDate Sep<11>2014 09:16 Apr 04, 2023 Jkt 256165 PO 00000 Frm 00135 Fmt 8010 Sfmt 8010 Q:\40\256165.XXX PC31

emit any single HAP at a rate of 9.07 megagrams (10 tons) or more per year or any combination of HAP at a rate of 22.68 megagrams (25 tons) or more per year.

(b) [Reserved]

§ 63.1562 What parts of my plant are covered by this subpart?

(a) This subpart applies to each new, reconstructed, or existing affected source at a petroleum refinery.

(b) The affected sources are:

(1) The process vent or group of process vents on fluidized catalytic cracking units that are associated with regeneration of the catalyst used in the unit (*i.e.*, the catalyst regeneration flue gas vent).

(2) The process vent or group of process vents on catalytic reforming units (including but not limited to semi-regenerative, cyclic, or continuous processes) that are associated with regeneration of the catalyst used in the unit. This affected source includes vents that are used during the unit depressurization, purging, coke burn, and catalyst rejuvenation.

(3) The process vent or group of process vents on Claus or other types of sulfur recovery plant units or the tail gas treatment units serving sulfur recovery plants that are associated with sulfur recovery.

(4) Each bypass line serving a new, existing, or reconstructed catalytic cracking unit, catalytic reforming unit, or sulfur recovery unit. This means each vent system that contains a bypass line (e.g., ductwork) that could divert an affected vent stream away from a control device used to comply with the requirements of this subpart.

(c) An affected source is a new affected source if you commence construction of the affected source after September 11, 1998, and you meet the applicability criteria in § 63.1561 at the time you commenced construction.

(d) Any affected source is reconstructed if you meet the criteria in § 63.2.

(e) An affected source is existing if it is not new or reconstructed.

(f) This subpart does not apply to:

(1) A thermal catalytic cracking unit.

(2) A sulfur recovery unit that does not recover elemental sulfur or where the modified reaction is carried out in a water solution which contains a metal ion capable of oxidizing the sulfide ion to sulfur (e.g., the LO-CAT II process).

(3) A redundant sulfur recovery unit not located at a petroleum refinery and used by the refinery only for emergency or maintenance backup.

(4) Equipment associated with bypass lines such as low leg drains, high point bleed, analyzer vents, open-ended valves or lines, or pressure relief valves needed for safety reasons.

(5) Gaseous streams routed to a fuel gas system, provided that on and after January 30, 2019, any flares receiving gas from the fuel gas system are subject to § 63.670.

[67 FR 17773, Apr. 11, 2002, as amended at 70 FR 6938, Feb. 9, 2005; 80 FR 75273, Dec. 1, 2015]

§ 63.1563 When do I have to comply with this subpart?

(a) If you have a new or reconstructed affected source, you must comply with this subpart according to the requirements in paragraphs (a)(1) and (2) of this section.

(1) If you startup your affected source before April 11, 2002, then you must comply with the emission limitations and work practice standards for new and reconstructed sources in this subpart no later than April 11, 2002 except as provided in paragraph (d) of this section.

(2) If you startup your affected source after April 11, 2002, you must comply with the emission limitations and work practice standards for new and reconstructed sources in this subpart upon startup of your affected source except as provided in paragraph (d) of this section.

(b) If you have an existing affected source, you must comply with the emission limitations and work practice standards for existing affected sources in this subpart by no later than April 11, 2005 except as specified in paragraphs (c) and (d) of this section.

(c) We will grant an extension of compliance for an existing catalytic cracking unit allowing additional time to meet the emission limitations and work practice standards for catalytic

sfrattini on LAPJZKW1R2 with $$_JOB
VerDate Sep<11>2014 09:16 Apr 04, 2023 Jkt 256165 PO 00000 Frm 00136 Fmt 8010 Sfmt 8010 Q:\40\256165.XXX PC31

cracking units in §§63.1564 and 63.1565 if you commit to hydrotreating the catalytic cracking unit feedstock and to meeting the emission limitations of this subpart on the same date that your facility meets the final Tier 2 gasoline sulfur control standard (40 CFR part 80, subpart J). To obtain an extension, you must submit a written notification to your permitting authority according to the requirements in §63.1574(e). Your notification must include the information in paragraphs (c)(1) and (2) of this section.

(1) Identification of the affected source with a brief description of the controls to be installed (if needed) to comply with the emission limitations for catalytic cracking units in this subpart.

(2) A compliance schedule, including the information in paragraphs (c)(2)(i) through (iv) of this section.

(i) The date by which onsite construction or the process change is to be initiated.

(ii) The date by which onsite construction or the process change is to be completed.

(iii) The date by which your facility will achieve final compliance with both the final Tier 2 gasoline sulfur control standard as specified in §80.195, and the emission limitations and work practice standards for catalytic cracking units in this subpart. In no case will your permitting authority grant an extension beyond the date you are required to meet the Tier 2 gasoline sulfur control standard or December 31, 2009, whichever comes first. If you don't comply with the emission limitations and work practice standards for existing catalytic cracking units by the specified date, you will be out-of-compliance with the requirements for catalytic cracking units beginning April 11, 2005.

(iv) A brief description of interim emission control measures that will be taken to ensure proper operation and maintenance of the process equipment during the period of the compliance extension.

(d) You must comply with the applicable requirements in §§63.1564(a)(5), 63.1565(a)(5) and 63.1568(a)(4) as specified in paragraph (d)(1) or (2) of this section, as applicable.

(1) For sources which commenced construction or reconstruction before June 30, 2014, you must comply with the applicable requirements in §§63.1564(a)(5), 63.1565(a)(5) and 63.1568(a)(4) on or before August 1, 2017 unless an extension is requested and approved in accordance with the provisions in §63.6(i). After February 1, 2016 and prior to the date of compliance with the provisions in §§63.1564(a)(5), 63.1565(a)(5) and 63.1568(a)(4), you must comply with the requirements in §63.1570(c) and (d).

(2) For sources which commenced construction or reconstruction on or after June 30, 2014, you must comply with the applicable requirements in §§63.1564(a)(5), 63.1565(a)(5) and 63.1568(a)(4) on or before February 1, 2016 or upon startup, whichever is later.

(e) If you have an area source that increases its emissions or its potential to emit such that it becomes a major source of HAP, the requirements in paragraphs (e)(1) and (2) of this section apply.

(1) Any portion of the existing facility that is a new affected source or a new reconstructed source must be in compliance with the requirements of this subpart upon startup.

(2) All other parts of the source must be in compliance with the requirements of this subpart by no later than 3 years after it becomes a major source or, if applicable, the extended compliance date granted according to the requirements in paragraph (c) of this section.

(f) You must meet the notification requirements in §63.1574 according to the schedule in §63.1574 and in 40 CFR part 63, subpart A. Some of the notifications must be submitted before the date you are required to comply with the emission limitations and work practice standards in this subpart.

[67 FR 17773, Apr. 11, 2002, as amended at 81 FR 45243, July 13, 2016]

sfrattini on LAPJZKW1R2 with $$_JOB
VerDate Sep<11>2014 09:16 Apr 04, 2023 Jkt 256165 PO 00000 Frm 00137 Fmt 8010 Sfmt 8010 Q:\40\256165.XXX PC31

CATALYTIC CRACKING UNITS, CATALYTIC REFORMING UNITS, SULFUR RECOVERY UNITS, AND BYPASS LINES

§ 63.1564 What are my requirements for metal HAP emissions from catalytic cracking units?

(a) *What emission limitations and work practice standards must I meet?* You must:

(1) Except as provided in paragraph (a)(5) of this section, meet each emission limitation in table 1 of this subpart that applies to you. If your catalytic cracking unit is subject to the NSPS for PM in § 60.102 of this chapter or is subject to § 60.102a(b)(1) of this chapter, you must meet the emission limitations for NSPS units. If your catalytic cracking unit is not subject to the NSPS for PM, you can choose from the six options in paragraphs (a)(1)(i) through (vi) of this section:

(i) You can elect to comply with the NSPS for PM in § 60.102 of this chapter (Option 1a);

(ii) You can elect to comply with the NSPS for PM coke burn-off emission limit in § 60.102a(b)(1) of this chapter (Option 1b);

(iii) You can elect to comply with the NSPS for PM concentration limit in § 60.102a(b)(1) of this chapter (Option 1c);

(iv) You can elect to comply with the PM per coke burn-off emission limit (Option 2);

(v) You can elect to comply with the Nickel (Ni) lb/hr emission limit (Option 3); or

(vi) You can elect to comply with the Ni per coke burn-off emission limit (Option 4).

(2) Comply with each operating limit in Table 2 of this subpart that applies to you. When a specific control device may be monitored using more than one continuous parameter monitoring system, you may select the parameter with which you will comply. You must provide notice to the Administrator (or other designated authority) if you elect to change the monitoring option.

(3) Prepare an operation, maintenance, and monitoring plan according to the requirements in § 63.1574(f) and operate at all times according to the procedures in the plan.

(4) The emission limitations and operating limits for metal HAP emissions from catalytic cracking units required in paragraphs (a)(1) and (2) of this section do not apply during periods of planned maintenance preapproved by the applicable permitting authority according to the requirements in § 63.1575(j).

(5) On or before the date specified in § 63.1563(d), you must comply with one of the two options in paragraphs (a)(5)(i) and (ii) of this section during periods of startup, shutdown and hot standby:

(i) You can elect to comply with the requirements in paragraphs (a)(1) and (2) of this section, except catalytic cracking units controlled using a wet scrubber must maintain only the liquid to gas ratio operating limit (the pressure drop operating limit does not apply); or

(ii) You can elect to maintain the inlet velocity to the primary internal cyclones of the catalytic cracking unit catalyst regenerator at or above 20 feet per second.

(b) *How do I demonstrate initial compliance with the emission limitations and work practice standard?* You must:

(1) Install, operate, and maintain a continuous monitoring system(s) according to the requirements in § 63.1572 and Table 3 of this subpart.

(2) Conduct a performance test for each catalytic cracking unit according to the requirements in § 63.1571 and under the conditions specified in Table 4 of this subpart.

(3) Establish each site-specific operating limit in Table 2 of this subpart that applies to you according to the procedures in Table 4 of this subpart.

(4) Use the procedures in paragraphs (b)(4)(i) through (iv) of this section to determine initial compliance with the emission limitations.

(i) If you elect Option 1b or Option 2 in paragraph (a)(1)(ii) or (iv) of this section, compute the PM emission rate (lb/1,000 lb of coke burn-off) for each run using Equations 1, 2, and 3 (if applicable) of this section and the site-specific opacity limit, if applicable, using Equation 4 of this section as follows:

sfrattini on LAPJZKW1R2 with $$_JOB
VerDate Sep<11>2014 09:16 Apr 04, 2023 Jkt 256165 PO 00000 Frm 00138 Fmt 8010 Sfmt 8010 Q:\40\256165.XXX PC31

$$R_c = K_1 Q_r (\%CO_2 + \%CO) + K_2 Q_a - K_3 Q_r \left[\left(\frac{\%CO}{2} \right) + \%CO_2 + \%O_2 \right] + K_3 Q_{oxy} (\%O_{xy}) \quad \text{(Eq. 1)}$$

Where:

R_c = Coke burn-off rate, kg/hr (lb/hr);

Q_r = Volumetric flow rate of exhaust gas from catalyst regenerator before adding air or gas streams. Example: You may measure upstream or downstream of an electrostatic precipitator, but you must measure upstream of a carbon monoxide boiler, dscm/min (dscf/min). You may use the alternative in either §63.1573(a)(1) or (2), as applicable, to calculate Qr;

Q_a = Volumetric flow rate of air to catalytic cracking unit catalyst regenerator, as determined from instruments in the catalytic cracking unit control room, dscm/min (dscf/min);

$\%CO_2$ = Carbon dioxide concentration in regenerator exhaust, percent by volume (dry basis);

%CO = Carbon monoxide concentration in regenerator exhaust, percent by volume (dry basis);

$\%O_2$ = Oxygen concentration in regenerator exhaust, percent by volume (dry basis);

K_1 = Material balance and conversion factor, 0.2982 (kg-min)/(hr-dscm-%) (0.0186 (lb-min)/(hr-dscf-%));

K_2 = Material balance and conversion factor, 2.088 (kg-min)/(hr-dscm) (0.1303 (lb-min)/(hr-dscf));

K_3 = Material balance and conversion factor, 0.0994 (kg-min)/(hr-dscm-%) (0.0062 (lb-min)/(hr-dscf-%));

Q_{oxy} = Volumetric flow rate of oxygen-enriched air stream to regenerator, as determined from instruments in the catalytic cracking unit control room, dscm/min (dscf/min); and

$\%O_{xy}$ = Oxygen concentration in oxygen-enriched air stream, percent by volume (dry basis).

$$E = \frac{K \times C_s \times Q_{sd}}{R_c} \quad \text{(Eq. 2)}$$

Where:

E = Emission rate of PM, kg/1,000 kg (lb/1,000 lb) of coke burn-off;

C_s = Concentration of PM, g/dscm (lb/dscf);

Q_{sd} = Volumetric flow rate of the catalytic cracking unit catalyst regenerator flue gas as measured by Method 2 in appendix A–1 to part 60 of this chapter, dscm/hr (dscf/hr);

R_c = Coke burn-off rate, kg coke/hr (1,000 lb coke/hr); and

K = Conversion factor, 1.0 (kg^2/g)/(1,000 kg) (1,000 lb/(1,000 lb)).

$$E_s = 1.0 + A\left(\frac{H}{R_c}\right)K' \quad \text{(Eq. 3)}$$

Where:

E_s = Emission rate of PM allowed, kg/1,000 kg (1b/1,000 lb) of coke burn-off in catalyst regenerator;

1.0 = Emission limitation, kg coke/1,000 kg (lb coke/1,000 lb);

A = Allowable incremental rate of PM emissions. Before August 1, 2017, A = 0.18 g/million cal (0.10 lb/million Btu). On or after August 1, 2017, A = 0 g/million cal (0 lb/million Btu);

H = Heat input rate from solid or liquid fossil fuel, million cal/hr (million Btu/hr). Make sure your permitting authority approves procedures for determining the heat input rate;

R_c = Coke burn-off rate, kg coke/hr (1,000 lb coke/hr) determined using Equation 1 of this section; and

K′ = Conversion factor to units to standard, 1.0 (kg_2/g)/(1,000 kg) (10_3 lb/(1,000 lb)).

sfrattini on LAPJZKW1R2 with $$_JOB
VerDate Sep<11>2014 09:16 Apr 04, 2023 Jkt 256165 PO 00000 Frm 00139 Fmt 8010 Sfmt 8010 Q:\40\256165.XXX PC31
ER01DE15.018</GPH> ER01DE15.019</GPH> ER01DE15.020</GPH>

$$Opacity\ Limit = Opacity_{st} \times \left(\frac{1\ \text{lb} / 1000\ \text{lb coke burn}}{PMEmR_{st}} \right) \qquad \text{(Eq. 4)}$$

Where:

Opacity Limit = Maximum permissible hourly average opacity, percent, or 10 percent, whichever is greater;

$Opacity_{st}$ = Hourly average opacity measured during the source test, percent; and

$PMEmR_{st}$ = PM emission rate measured during the source test, lb/1,000 lb coke burn.

(ii) If you elect Option 1c in paragraph (a)(1)(iii) of this section, the PM concentration emission limit, determine the average PM concentration from the initial performance test used to certify your PM CEMS.

(iii) If you elect Option 3 in paragraph (a)(1)(v) of this section, the Ni lb/hr emission limit, compute your Ni emission rate using Equation 5 of this section and your site-specific Ni operating limit (if you use a continuous opacity monitoring system) using Equations 6 and 7 of this section as follows:

$$E_{Ni_1} = C_{Ni} \times Q_{sd} \qquad \text{(Eq. 5)}$$

Where:

E_{Ni1} = Mass emission rate of Ni, mg/hr (lb/hr); and

C_{Ni} = Ni concentration in the catalytic cracking unit catalyst regenerator flue gas as measured by Method 29 in appendix A to part 60 of this chapter, mg/dscm (lbs/dscf).

$$\text{Opacity}_1 = \frac{13\ \text{g Ni/hr}}{\text{NiEmR1}_{st}} \times \text{Opacity}_{st} \qquad \text{(Eq. 6)}$$

Where:

$Opacity_1$ = Opacity value for use in Equation 7 of this section, percent, or 10 percent, whichever is greater; and

$NiEmR1_{st}$ = Average Ni emission rate calculated as the arithmetic average Ni emission rate using Equation 5 of this section for each of the performance test runs, g Ni/hr.

$$\text{Ni Operating Limit}_1 = \text{Opacity}_1 \times Q_{mon,st} \times \text{E-Cat}_{st} \qquad \text{(Eq. 7)}$$

Where:

Ni operating $limit_1$ = Maximum permissible hourly average Ni operating limit, percent-acfm-ppmw, i.e., your site-specific Ni operating limit;

$Q_{mon,st}$ = Hourly average actual gas flow rate as measured by the continuous parameter monitoring system during the performance test or using the alternative procedure in § 63.1573, acfm; and

$E\text{-}Cat_{st}$ = Ni concentration on equilibrium catalyst measured during source test, ppmw.

(iv) If you elect Option 4 in paragraph (a)(1)(vi) of this section, the Ni per coke burn-off emission limit, compute your Ni emission rate using Equations 1 and 8 of this section and your site-specific Ni operating limit (if you use a continuous opacity monitoring system) using Equations 9 and 10 of this section as follows:

$$E_{Ni_2} = \frac{C_{Ni} \times Q_{sd}}{R_c} \qquad \text{(Eq. 8)}$$

sfrattini on LAPJZKW1R2 with $$_JOB
VerDate Sep<11>2014 09:16 Apr 04, 2023 Jkt 256165 PO 00000 Frm 00140 Fmt 8010 Sfmt 8006 Q:\40\256165.XXX PC31
ER01DE15.021</GPH> ER11AP02.004</MATH> ER11AP02.005</MATH> ER11AP02.006</MATH> ER01DE15.022</GPH>

Where:

E_{Ni2} = Normalized mass emission rate of Ni, mg/kg coke (lb/1,000 lb coke).

$$Opacity_2 = \frac{1.0\ \text{mg/kg coke}}{NiEmR2_{st}} \times Opacity_{st} \qquad \text{(Eq. 9)}$$

Where:

$Opacity_2$ = Opacity value for use in Equation 10 of this section, percent, or 10 percent, whichever is greater; and

$NiEmR2_{st}$ = Average Ni emission rate calculated as the arithmetic average Ni emission rate using Equation 8 of this section for each of the performance test runs, mg/kg coke.

$$Ni\ Operating\ Limit_2 = Opacity_2 \times E\text{-}Cat_{st} \times \frac{Q_{mon,st}}{R_{c,st}} \qquad \text{(Eq. 10)}$$

Where:

Ni Operating $Limit_2$ = Maximum permissible hourly average Ni operating limit, percent-ppmw-acfm-hr/kg coke, *i.e.*, your site-specific Ni operating limit; and

$R_{c,st}$ = Coke burn rate from Equation 1 of this section, as measured during the initial performance test, kg coke/hr.

(5) Demonstrate initial compliance with each emission limitation that applies to you according to Table 5 of this subpart.

(6) Demonstrate initial compliance with the work practice standard in paragraph (a)(3) of this section by submitting your operation, maintenance, and monitoring plan to your permitting authority as part of your Notification of Compliance Status.

(7) Submit the Notification of Compliance Status containing the results of the initial compliance demonstration according to the requirements in §63.1574.

(c) *How do I demonstrate continuous compliance with the emission limitations and work practice standards?* You must:

(1) Demonstrate continuous compliance with each emission limitation in Tables 1 and 2 of this subpart that applies to you according to the methods specified in Tables 6 and 7 of this subpart.

(2) Demonstrate continuous compliance with the work practice standard in paragraph (a)(3) of this section by maintaining records to document conformance with the procedures in your operation, maintenance, and monitoring plan.

(3) If you use a continuous opacity monitoring system and elect to comply with Option 3 in paragraph (a)(1)(v) of this section, determine continuous compliance with your site-specific Ni operating limit by using Equation 11 of this section as follows:

$$\text{Ni Operating Value}_1 = \text{Opacity} \times Q_{mon} \times \text{E-Cat} \qquad \text{(Eq. 11)}$$

Where:

Ni operating $value_1$ = Maximum permissible hourly average Ni standard operating value, %-acfm-ppmw;

Opacity = Hourly average opacity, percent;

Q_{mon} = Hourly average actual gas flow rate as measured by continuous parameter monitoring system or calculated by alternative procedure in §63.1573, acfm; and

E-Cat = Ni concentration on equilibrium catalyst from weekly or more recent measurement, ppmw.

sfrattini on LAPJZKW1R2 with $$_JOB
VerDate Sep<11>2014 09:16 Apr 04, 2023 Jkt 256165 PO 00000 Frm 00141 Fmt 8010 Sfmt 8010 Q:\40\256165.XXX PC31
ER01DE15.023</GPH> ER01DE15.024</GPH> ER11AP02.010</MATH>

(4) If you use a continuous opacity monitoring system and elect to comply with Option 4 in paragraph (a)(1)(vi) of this section, determine continuous compliance with your site-specific Ni operating limit by using Equation 12 of this section as follows:

$$\text{Ni Operating Value}_2 = \frac{\text{Opacity} \times \text{E-Cat} \times Q_{mon}}{R_c} \qquad \text{(Eq. 12)}$$

Where:

Ni operating value$_2$ = Maximum permissible hourly average Ni standard operating value, percent-acfm-ppmw-hr/kg coke.

(5) If you elect to comply with the alternative limit in paragraph (a)(5)(ii) of this section during periods of startup, shutdown and hot standby, demonstrate continuous compliance on or before the date specified in § 63.1563(d) by:

(i) Collecting the volumetric flow rate from the catalyst regenerator (in acfm) and determining the average flow rate for each hour. For events lasting less than one hour, determine the average flow rate during the event.

(ii) Determining the cumulative cross-sectional area of the primary internal cyclone inlets in square feet (ft^2) using design drawings of the primary (first-stage) internal cyclones to determine the inlet cross-sectional area of each primary internal cyclone and summing the cross-sectional areas for all primary internal cyclones in the catalyst regenerator or, if primary cyclones. If all primary internal cyclones are identical, you may alternatively determine the inlet cross-sectional area of one primary internal cyclone using design drawings and multiply that area by the total number of primary internal cyclones in the catalyst regenerator.

(iii) Calculating the inlet velocity to the primary internal cyclones in feet per second (ft/sec) by dividing the average volumetric flow rate (acfm) by the cumulative cross-sectional area of the primary internal cyclone inlets (ft^2) and by 60 seconds/minute (for unit conversion).

(iv) Maintaining the inlet velocity to the primary internal cyclones at or above 20 feet per second for each hour during the startup, shutdown, or hot standby event or, for events lasting less than 1 hour, for the duration of the event.

[67 FR 17773, Apr. 11, 2002, as amended at 70 FR 6938, Feb. 9, 2005; 80 FR 75273, Dec. 1, 2015; 81 FR 45243, July 13, 2016; 83 FR 60722, Nov. 26, 2018]

§ 63.1565 What are my requirements for organic HAP emissions from catalytic cracking units?

(a) *What emission limitations and work practice standards must I meet?* You must:

(1) Except as provided in paragraph (a)(5) of this section, meet each emission limitation in Table 8 of this subpart that applies to you. If your catalytic cracking unit is subject to the NSPS for carbon monoxide (CO) in § 60.103 of this chapter or is subject to § 60.102a(b)(4) of this chapter, you must meet the emission limitations for NSPS units. If your catalytic cracking unit is not subject to the NSPS for CO, you can choose from the two options in paragraphs (a)(1)(i) through (ii) of this section:

(i) You can elect to comply with the NSPS requirements (Option 1); or

(ii) You can elect to comply with the CO emission limit (Option 2).

(2) Comply with each site-specific operating limit in Table 9 of this subpart that applies to you.

(3) Prepare an operation, maintenance, and monitoring plan according to the requirements in § 63.1574(f) and operate at all times according to the procedures in the plan.

(4) The emission limitations and operating limits for organic HAP emissions from catalytic cracking units required in paragraphs (a)(1) and (2) of this section do not apply during periods of planned maintenance

sfrattini on LAPJZKW1R2 with $$_JOB
VerDate Sep<11>2014 09:16 Apr 04, 2023 Jkt 256165 PO 00000 Frm 00142 Fmt 8010 Sfmt 8010 Q:\40\256165.XXX PC31
ER11AP02.011</MATH>

preapproved by the applicable permitting authority according to the requirements in §63.1575(j).

(5) On or before the date specified in §63.1563(d), you must comply with one of the two options in paragraphs (a)(5)(i) and (ii) of this section during periods of startup, shutdown and hot standby:

(i) You can elect to comply with the requirements in paragraphs (a)(1) and (2) of this section; or

(ii) You can elect to maintain the oxygen (O_2) concentration in the exhaust gas from your catalyst regenerator at or above 1 volume percent (dry basis) or 1 volume percent (wet basis with no moisture correction).

(b) *How do I demonstrate initial compliance with the emission limitations and work practice standards?* You must:

(1) Install, operate, and maintain a continuous monitoring system according to the requirements in §63.1572 and Table 10 of this subpart. Except:

(i) Whether or not your catalytic cracking unit is subject to the NSPS for CO in §60.103 of this chapter, you don't have to install and operate a continuous emission monitoring system if you show that CO emissions from your vent average less than 50 parts per million (ppm), dry basis. You must get an exemption from your permitting authority, based on your written request. To show that the emissions average is less than 50 ppm (dry basis), you must continuously monitor CO emissions for 30 days using a CO continuous emission monitoring system that meets the requirements in §63.1572.

(ii) If your catalytic cracking unit isn't subject to the NSPS for CO, you don't have to install and operate a continuous emission monitoring system or a continuous parameter monitoring system if you vent emissions to a boiler (including a ''CO boiler'') or process heater that has a design heat input capacity of at least 44 megawatts (MW).

(iii) If your catalytic cracking unit isn't subject to the NSPS for CO, you don't have to install and operate a continuous emission monitoring system or a continuous parameter monitoring system if you vent emissions to a boiler or process heater in which all vent streams are introduced into the flame zone.

(2) Conduct each performance test for a catalytic cracking unit not subject to the NSPS for CO according to the requirements in §63.1571 and under the conditions specified in Table 11 of this subpart.

(3) Establish each site-specific operating limit in Table 9 of this subpart that applies to you according to the procedures in Table 11 of this subpart.

(4) Demonstrate initial compliance with each emission limitation that applies to you according to Table 12 of this subpart.

(5) Demonstrate initial compliance with the work practice standard in paragraph (a)(3) of this section by submitting the operation, maintenance, and monitoring plan to your permitting authority as part of your Notification of Compliance Status according to §63.1574.

(6) Submit the Notification of Compliance Status containing the results of the initial compliance demonstration according to the requirements in §63.1574.

(c) *How do I demonstrate continuous compliance with the emission limitations and work practice standards?* You must:

(1) Demonstrate continuous compliance with each emission limitation in Tables 8 and 9 of this subpart that applies to you according to the methods specified in Tables 13 and 14 of this subpart.

(2) Demonstrate continuous compliance with the work practice standard in paragraph (a)(3) of this section by complying with the procedures in your operation, maintenance, and monitoring plan.

[67 FR 17773, Apr. 11, 2002, as amended at 80 FR 75275, Dec. 1, 2015; 81 FR 45243, July 13, 2016; 83 FR 60723, Nov. 26, 2018]

§63.1566 What are my requirements for organic HAP emissions from catalytic reforming units?

(a) *What emission limitations and work practice standards must I meet?* You must:

(1) Meet each emission limitation in Table 15 of this subpart that applies to you. You can choose from the two options in paragraphs (a)(1)(i) and (ii) of this section.

(i) You can elect to vent emissions of total organic compounds (TOC) to a

sfrattini on LAPJZKW1R2 with $$_JOB
VerDate Sep<11>2014 09:16 Apr 04, 2023 Jkt 256165 PO 00000 Frm 00143 Fmt 8010 Sfmt 8010 Q:\40\256165.XXX PC31

flare (Option 1). On and after January 30, 2019, the flare must meet the requirements of § 63.670. Prior to January 30, 2019, the flare must meet the control device requirements in § 63.11(b) or the requirements of § 63.670.

(ii) You can elect to meet a TOC or nonmethane TOC percent reduction standard or concentration limit, whichever is less stringent (Option 2).

(2) Comply with each site-specific operating limit in Table 16 of this subpart that applies to you.

(3) Except as provided in paragraph (a)(4) of this section, the emission limitations in Tables 15 and 16 of this subpart apply to emissions from catalytic reforming unit process vents associated with initial catalyst depressuring and catalyst purging operations that occur prior to the coke burn-off cycle. The emission limitations in Tables 15 and 16 of this subpart do not apply to the coke burn-off, catalyst rejuvenation, reduction or activation vents, or to the control systems used for these vents.

(4) The emission limitations in tables 15 and 16 of this subpart do not apply to emissions from process vents during passive depressuring when the reactor vent pressure is 5 pounds per square inch gauge (psig) or less or during active depressuring or purging prior to January 30, 2019, when the reactor vent pressure is 5 psig or less. On and after January 30, 2019, the emission limitations in tables 15 and 16 of this subpart do apply to emissions from process vents during active purging operations (when nitrogen or other purge gas is actively introduced to the reactor vessel) or active depressuring (using a vacuum pump, ejector system, or similar device) regardless of the reactor vent pressure.

(5) Prepare an operation, maintenance, and monitoring plan according to the requirements in § 63.1574(f) and operate at all times according to the procedures in the plan.

(b) *How do I demonstrate initial compliance with the emission limitations and work practice standard?* You must:

(1) Install, operate, and maintain a continuous monitoring system(s) according to the requirements in § 63.1572 and Table 17 of this subpart.

(2) Conduct each performance test for a catalytic reforming unit according to the requirements in § 63.1571 and under the conditions specified in Table 18 of this subpart.

(3) Establish each site-specific operating limit in Table 16 of this subpart that applies to you according to the procedures in Table 18 of this subpart.

(4) Use the procedures in paragraph (b)(4)(i) or (ii) of this section to determine initial compliance with the emission limitations.

(i) If you elect the percent reduction standard under Option 2, calculate the emission rate of nonmethane TOC using Equation 1 of this section (if you use Method 25) or Equation 2 of this section (if you use Method 25A or Methods 25A and 18), then calculate the mass emission reduction using Equation 3 of this section as follows:

$$E = K_4 M_c Q_s \qquad \text{(Eq. 1)}$$

Where:

E = Emission rate of nonmethane TOC in the vent stream, kilograms-C per hour;

K_4 = Constant, 6.0×10^{-5} (kilograms per milligram)(minutes per hour);

M_c = Mass concentration of total gaseous nonmethane organic (as carbon) as measured and calculated using Method 25 in appendix A to part 60 of this chapter, mg/dscm; and

Q_s = Vent stream flow rate, dscm/min, at a temperature of 20 degrees Celsius (C).

$$E = K_5\left(C_{TOC} - \tfrac{1}{6} C_{methane}\right) Q_s \qquad \text{(Eq. 2)}$$

Where:

K_5 = Constant, 1.8×10^{-4} (parts per million)$^{-1}$ (gram-mole per standard cubic meter) (gram-C per gram-mole-hexane) (kilogram per gram) (minutes per hour), where the standard temperature (standard cubic meter) is at 20 degrees C (uses 72g-C/g.mole hexane);

C_{TOC} = Concentration of TOC on a dry basis in ppmv as hexane as measured by Method 25A in appendix A to part 60 of this chapter;

$C_{methane}$ = Concentration of methane on a dry basis in ppmv as measured by Method 18 in appendix A to part 60 of this chapter. If the concentration of methane is not determined, assume $C_{methane}$ equals zero; and

Q_s = Vent stream flow rate, dry standard cubic meters per minute, at a temperature of 20 degrees C.

sfrattini on LAPJZKW1R2 with $$_JOB
VerDate Sep<11>2014 09:16 Apr 04, 2023 Jkt 256165 PO 00000 Frm 00144 Fmt 8010 Sfmt 8010 Q:\40\256165.XXX PC31
ER11AP02.012</MATH> ER09FE05.001</MATH>

$$\% \text{ reduction} = \frac{E_i - E_o}{E_i} \times 100\% \qquad \text{(Eq. 3)}$$

Where:

E_i = Mass emission rate of TOC at control device inlet, kg/hr; and

E_o = Mass emission rate of TOC at control device outlet, kg/hr.

(ii) If you elect the 20 parts per million by volume (ppmv) concentration limit, correct the measured TOC concentration for oxygen (O_2) content in the gas stream using Equation 4 of this section as follows:

$$C_{NMTOC,\ 3\%O_2} = \left(C_{TOC} - \tfrac{1}{6} C_{methane}\right)\left(\frac{17.9\%}{20.9\% - \%O_2}\right) \qquad \text{(Eq. 4)}$$

Where:

$C_{NMTOC,\ 3\%O_2}$ = Concentration of nonmethane TOC on a dry basis in ppmv as hexane corrected to 3 percent oxygen.

(5) You are not required to do a TOC performance test if:

(i) You elect to vent emissions to a flare as provided in paragraph (a)(1)(i) of this section (Option 1); or

(ii) You elect the TOC percent reduction or concentration limit in paragraph (a)(1)(ii) of this section (Option 2), and you use a boiler or process heater with a design heat input capacity of 44 MW or greater or a boiler or process heater in which all vent streams are introduced into the flame zone.

(6) Demonstrate initial compliance with each emission limitation that applies to you according to Table 19 of this subpart.

(7) Demonstrate initial compliance with the work practice standard in paragraph (a)(5) of this section by submitting the operation, maintenance, and monitoring plan to your permitting authority as part of your Notification of Compliance Status.

(8) Submit the Notification of Compliance Status containing the results of the initial compliance demonstration according to the requirements in §63.1574.

(c) *How do I demonstrate continuous compliance with the emission limitations and work practice standards?* You must:

(1) Demonstrate continuous compliance with each emission limitation in Tables 15 and 16 of this subpart that applies to you according to the methods specified in Tables 20 and 21 of this subpart.

(2) Demonstrate continuous compliance with the work practice standards in paragraph (a)(3) of this section by complying with the procedures in your operation, maintenance, and monitoring plan.

[67 FR 17773, Apr. 11, 2002, as amended at 70 FR 6938, Feb. 9, 2005; 80 FR 75275, Dec. 1, 2015; 81 FR 45243, July 13, 2016]

§63.1567 What are my requirements for inorganic HAP emissions from catalytic reforming units?

(a) *What emission limitations and work practice standards must I meet?* You must:

(1) Meet each emission limitation in Table 22 to this subpart that applies to you. If you operate a catalytic reforming unit in which different reactors in the catalytic reforming unit are regenerated in separate regeneration systems, then these emission limitations apply to each separate regeneration system. These emission limitations apply to emissions from catalytic reforming unit process vents associated with the coke burn-off and catalyst rejuvenation operations during coke burn-off and catalyst regeneration. You can choose from the two options in paragraphs (a)(1)(i) through (ii) of this section:

(i) You can elect to meet a percent reduction standard for hydrogen chloride (HCl) emissions (Option 1); or

sfrattini on LAPJZKW1R2 with $$_JOB
VerDate Sep<11>2014 09:16 Apr 04, 2023 Jkt 256165 PO 00000 Frm 00145 Fmt 8010 Sfmt 8010 Q:\40\256165.XXX PC31
ER11AP02.014</MATH> ER09FE05.002</MATH>

(ii) You can elect to meet an HCl concentration limit (Option 2).

(2) Meet each site-specific operating limit in Table 23 of this subpart that applies to you. These operating limits apply during coke burn-off and catalyst rejuvenation.

(3) Prepare an operation, maintenance, and monitoring plan according to the requirements in § 63.1574(f) and operate at all times according to the procedures in the plan.

(b) *How do I demonstrate initial compliance with the emission limitations and work practice standard?* You must:

(1) Install, operate, and maintain a continuous monitoring system(s) according to the requirements in § 63.1572 and Table 24 of this subpart.

(2) Conduct each performance test for a catalytic reforming unit according to the requirements in § 63.1571 and the conditions specified in Table 25 of this subpart.

(3) Establish each site-specific operating limit in Table 23 of this subpart that applies to you according to the procedures in Table 25 of this subpart.

(4) Use the equations in paragraphs (b)(4)(i) through (iv) of this section to determine initial compliance with the emission limitations.

(i) Correct the measured HCl concentration for oxygen (O_2) content in the gas stream using Equation 1 of this section as follows:

$$C_{HCl,\,3\%O_2} = \left(\frac{17.9\%}{20.9\% - \%O_2}\right) C_{HCl} \qquad \text{(Eq. 1)}$$

Where:

$C_{HCl,3\%}O_2$ = Concentration of HCl on a dry basis in ppmv corrected to 3 percent oxygen or 1 ppmv, whichever is greater;

C_{HCl} = Concentration of HCl on a dry basis in ppmv, as measured by Method 26A in 40 CFR part 60, appendix A; and

$\%O_2$ = Oxygen concentration in percent by volume (dry basis).

(ii) If you elect the percent reduction standard, calculate the emission rate of HCl using Equation 2 of this section; then calculate the mass emission reduction from the mass emission rates using Equation 3 of this section as follows:

$$E_{HCl} = K_6 C_{HCl} Q_s \qquad \text{(Eq. 2)}$$

Where:

E_{HCl} = Emission rate of HCl in the vent stream, grams per hour;

K_6 = Constant, 0.091 (parts per million)$^{-1}$ (grams HCl per standard cubic meter) (minutes per hour), where the standard temperature (standard cubic meter) is at 20 degrees Celsius (C); and

Q_s = Vent stream flow rate, dscm/min, at a temperature of 20 degrees C.

$$\text{HCl\%reduction} = \frac{E_{HCl,\,i} - E_{HCl,\,o}}{E_{HCl,\,i}} \times 100\% \qquad \text{(Eq. 3)}$$

Where:

$E_{HCl,i}$ = Mass emission rate of HCl at control device inlet, g/hr; and

$E_{HCl,o}$ = Mass emission rate of HCl at control device outlet, g/hr.

(iii) If you are required to use a colormetric tube sampling system to demonstrate continuous compliance with the HCl concentration operating limit, calculate the HCl operating limit using Equation 4 of this section as follows:

sfrattini on LAPJZKW1R2 with $$_JOB
VerDate Sep<11>2014 09:16 Apr 04, 2023 Jkt 256165 PO 00000 Frm 00146 Fmt 8010 Sfmt 8010 Q:\40\256165.XXX PC31
ER09FE05.003</MATH> ER09FE05.004</MATH> ER09FE05.005</MATH>

$$C_{HCl,\ ppmvLimit} = 0.9C_{HCl,\ AveTube}\left(\frac{C_{HCl,\ RegLimit}}{C_{HCl,\ 3\%O_2}}\right) \quad \text{(Eq. 4)}$$

Where:

$C_{HCl,ppmvLimit}$ = Maximum permissible HCl concentration for the HCl concentration operating limit, ppmv;

$C_{HCl,AveTube}$ = Average HCl concentration from the colormetric tube sampling system, calculated as the arithmetic average of the average HCl concentration measured for each performance test run, ppmv or 1 ppmv, whichever is greater; and

$C_{HCl,RegLimit}$ = Maximum permissible outlet HCl concentration for the applicable catalytic reforming unit as listed in Table 22 of this subpart, either 10 or 30 ppmv.

(iv) If you are required to use a colormetric tube sampling system to demonstrate continuous compliance with the percent reduction operating limit, calculate the HCl operating limit using Equation 5 of this section as follows:

$$C_{HCl,\ \%Limit} = 0.9C_{HCl,\ AveTube}\left(\frac{100 - \%HClReduction_{Limit}}{100 - \%HClReduction_{Test}}\right) \quad \text{(Eq. 5)}$$

Where:

$C_{HCl,\%Limit}$ = Maximum permissible HCl concentration for the percent reduction operating limit, ppmv;

$\%HCl\ Reduction_{Limit}$ = Minimum permissible HCl reduction for the applicable catalytic reforming unit as listed in Table 22 of this subpart, either 97 or 92 percent; and

$\%HCl\ Reduction_{Test}$ = Average percent HCl reduction calculated as the arithmetic average HCl reduction calculated using Equation 3 of this section for each performance source test, percent.

(5) Demonstrate initial compliance with each emission limitation that applies to you according to Table 26 of this subpart.

(6) Demonstrate initial compliance with the work practice standard in paragraph (a)(3) of this section by submitting the operation, maintenance, and monitoring plan to your permitting authority as part of your Notification of Compliance Status.

(7) Submit the Notification of Compliance Status containing the results of the initial compliance demonstration according to the requirements in §63.1574.

(c) *How do I demonstrate continuous compliance with the emission limitations and work practice standard?* You must:

(1) Demonstrate continuous compliance with each emission limitation in Tables 22 and 23 of this subpart that applies to you according to the methods specified in Tables 27 and 28 of this subpart.

(2) Demonstrate continuous compliance with the work practice standard in paragraph (a)(3) of this section by maintaining records to document conformance with the procedures in your operation, maintenance and monitoring plan.

[67 FR 17773, Apr. 11, 2002, as amended at 70 FR 6939, Feb. 9, 2005]

§63.1568 What are my requirements for HAP emissions from sulfur recovery units?

(a) *What emission limitations and work practice standard must I meet?* You must:

(1) Meet each emission limitation in Table 29 of this subpart that applies to you. If your sulfur recovery unit is subject to the NSPS for sulfur oxides in §60.104 or §60.102a(f)(1) of this chapter, you must meet the emission limitations for NSPS units. If your sulfur recovery unit is not subject to one of these NSPS for sulfur oxides, you can choose from the options in paragraphs (a)(1)(i) through (ii) of this section:

(i) You can elect to meet the NSPS requirements in §60.104(a)(2) or §60.102a(f)(1) of this chapter (Option 1); or

sfrattini on LAPJZKW1R2 with $$_JOB
VerDate Sep<11>2014 09:16 Apr 04, 2023 Jkt 256165 PO 00000 Frm 00147 Fmt 8010 Sfmt 8010 Q:\40\256165.XXX PC31
ER09FE05.006</MATH> ER09FE05.007</MATH>

(ii) You can elect to meet the total reduced sulfur (TRS) emission limitation (Option 2).

(2) Meet each operating limit in Table 30 of this subpart that applies to you.

(3) Prepare an operation, maintenance, and monitoring plan according to the requirements in § 63.1574(f) and operate at all times according to the procedures in the plan.

(4) On or before the date specified in § 63.1563(d), you must comply with one of the three options in paragraphs (a)(4)(i) through (iii) of this section during periods of startup and shutdown.

(i) You can elect to comply with the requirements in paragraphs (a)(1) and (2) of this section.

(ii) You can elect to send any startup or shutdown purge gases to a flare. On and after January 30, 2019, the flare must meet the requirements of § 63.670. Prior to January 30, 2019, the flare must meet the design and operating requirements in § 63.11(b) or the requirements of § 63.670.

(iii) You can elect to send any startup or shutdown purge gases to a thermal oxidizer or incinerator operated at a minimum hourly average temperature of 1,200 degrees Fahrenheit in the firebox and a minimum hourly average outlet oxygen (O_2) concentration of 2 volume percent (dry basis).

(b) *How do I demonstrate initial compliance with the emission limitations and work practice standards?* You must:

(1) Install, operate, and maintain a continuous monitoring system according to the requirements in § 63.1572 and Table 31 of this subpart.

(2) Conduct each performance test for a sulfur recovery unit not subject to the NSPS for sulfur oxides according to the requirements in § 63.1571 and under the conditions specified in Table 32 of this subpart.

(3) Establish each site-specific operating limit in Table 30 of this subpart that applies to you according to the procedures in Table 32 of this subpart.

(4) Correct the reduced sulfur samples to zero percent excess air using Equation 1 of this section as follows:

$$C_{adj} = C_{meas}\left[20.9_c/\left(20.9 - \%O_2\right)\right] \qquad \text{(Eq. 1)}$$

Where:

C_{adj} = pollutant concentration adjusted to zero percent oxygen, ppm or g/dscm;

C_{meas} = pollutant concentration measured on a dry basis, ppm or g/dscm;

20.9_c = 20.9 percent oxygen—0.0 percent oxygen (defined oxygen correction basis), percent;

20.9 = oxygen concentration in air, percent;

$\%O_2$ = oxygen concentration measured on a dry basis, percent.

(5) Demonstrate initial compliance with each emission limitation that applies to you according to Table 33 of this subpart.

(6) Demonstrate initial compliance with the work practice standard in paragraph (a)(3) of this section by submitting the operation, maintenance, and monitoring plan to your permitting authority as part of your notification of compliance status.

(7) Submit the notification of compliance status containing the results of the initial compliance demonstration according to the requirements in § 63.1574.

(c) *How do I demonstrate continuous compliance with the emission limitations and work practice standards?* You must:

(1) Demonstrate continuous compliance with each emission limitation in Tables 29 and 30 of this subpart that applies to you according to the methods specified in Tables 34 and 35 of this subpart.

(2) Demonstrate continuous compliance with the work practice standard in paragraph (a)(3) of this section by complying with the procedures in your operation, maintenance, and monitoring plan.

[67 FR 17773, Apr. 11, 2002, as amended at 80 FR 75275, Dec. 1, 2015; 81 FR 45244, July 13, 2016]

sfrattini on LAPJZKW1R2 with $$_JOB
VerDate Sep<11>2014 09:16 Apr 04, 2023 Jkt 256165 PO 00000 Frm 00148 Fmt 8010 Sfmt 8010 Q:\40\256165.XXX PC31
ER11AP02.016</MATH>

§ 63.1569 What are my requirements for HAP emissions from bypass lines?

(a) *What work practice standards must I meet?* (1) You must meet each work practice standard in Table 36 of this subpart that applies to you. You can choose from the four options in paragraphs (a)(1)(i) through (iv) of this section:

(i) You can elect to install an automated system (Option 1);

(ii) You can elect to use a manual lock system (Option 2);

(iii) You can elect to seal the line (Option 3); or

(iv) You can elect to vent to a control device (Option 4).

(2) As provided in § 63.6(g), we, the EPA, may choose to grant you permission to use an alternative to the work practice standard in paragraph (a)(1) of this section.

(3) You must prepare an operation, maintenance, and monitoring plan according to the requirements in § 63.1574(f) and operate at all times according to the procedures in the plan.

(b) *How do I demonstrate initial compliance with the work practice standards?* You must:

(1) If you elect the option in paragraph (a)(1)(i) of this section, conduct each performance test for a bypass line according to the requirements in § 63.1571 and under the conditions specified in Table 37 of this subpart.

(2) Demonstrate initial compliance with each work practice standard in Table 36 of this subpart that applies to you according to Table 38 of this subpart.

(3) Demonstrate initial compliance with the work practice standard in paragraph (a)(3) of this section by submitting the operation, maintenance, and monitoring plan to your permitting authority as part of your notification of compliance status.

(4) Submit the notification of compliance status containing the results of the initial compliance demonstration according to the requirements in § 63.1574.

(c) *How do I demonstrate continuous compliance with the work practice standards?* You must:

(1) Demonstrate continuous compliance with each work practice standard in Table 36 of this subpart that applies to you according to the requirements in Table 39 of this subpart.

(2) Demonstrate continuous compliance with the work practice standard in paragraph (a)(3) of this section by complying with the procedures in your operation, maintenance, and monitoring plan.

[67 FR 17773, Apr. 11, 2002, as amended at 83 FR 60723, Nov. 26, 2018]

GENERAL COMPLIANCE REQUIREMENTS

§ 63.1570 What are my general requirements for complying with this subpart?

(a) You must be in compliance with all of the non-opacity standards in this subpart at all times.

(b) You must be in compliance with the opacity and visible emission limits in this subpart at all times.

(c) At all times, you must operate and maintain any affected source, including associated air pollution control equipment and monitoring equipment, in a manner consistent with safety and good air pollution control practices for minimizing emissions. The general duty to minimize emissions does not require you to make any further efforts to reduce emissions if levels required by the applicable standard have been achieved. Determination of whether a source is operating in compliance with operation and maintenance requirements will be based on information available to the Administrator which may include, but is not limited to, monitoring results, review of operation and maintenance procedures, review of operation and maintenance records, and inspection of the source.

(d) During the period between the compliance date specified for your affected source and the date upon which continuous monitoring systems have been installed and validated and any applicable operating limits have been set, you must maintain a log that documents the procedures used to minimize emissions from process and emissions control equipment according to the general duty in paragraph (c) of this section.

(e) [Reserved]

(f) You must report each instance in which you did not meet each emission

sfrattini on LAPJZKW1R2 with $$_JOB
VerDate Sep<11>2014 09:16 Apr 04, 2023 Jkt 256165 PO 00000 Frm 00149 Fmt 8010 Sfmt 8010 Q:\40\256165.XXX PC31

limitation and each operating limit in this subpart that applies to you. This includes periods of startup, shutdown, and malfunction. You also must report each instance in which you did not meet the work practice standards in this subpart that apply to you. These instances are deviations from the emission limitations and work practice standards in this subpart. These deviations must be reported according to the requirements in § 63.1575.

[67 FR 17773, Apr. 11, 2002, as amended at 71 FR 20462, Apr. 20, 2006; 80 FR 75276, Dec. 1, 2015]

§ 63.1571 How and when do I conduct a performance test or other initial compliance demonstration?

(a) *When must I conduct a performance test?* You must conduct initial performance tests and report the results by no later than 150 days after the compliance date specified for your source in § 63.1563 and according to the provisions in §§ 63.7(a)(2) and 63.1574(a)(3). If you are required to do a performance evaluation or test for a semi-regenerative catalytic reforming unit catalyst regenerator vent, you may do them at the first regeneration cycle after your compliance date and report the results in a followup Notification of Compliance Status report due no later than 150 days after the test. You must conduct additional performance tests as specified in paragraphs (a)(5) and (6) of this section and report the results of these performance tests according to the provisions in § 63.1575(f).

(1) For each emission limitation or work practice standard where initial compliance is not demonstrated using a performance test, opacity observation, or visible emission observation, you must conduct the initial compliance demonstration within 30 calendar days after the compliance date that is specified for your source in § 63.1563.

(2) For each emission limitation where the averaging period is 30 days, the 30-day period for demonstrating initial compliance begins at 12:00 a.m. on the compliance date that is specified for your source in § 63.1563 and ends at 11:59 p.m., 30 calendar days after the compliance date that is specified for your source in § 63.1563.

(3) If you commenced construction or reconstruction between September 11, 1998 and April 11, 2002, you must demonstrate initial compliance with either the proposed emission limitation or the promulgated emission limitation no later than October 8, 2002 or within 180 calendar days after startup of the source, whichever is later, according to § 63.7(a)(2)(ix).

(4) If you commenced construction or reconstruction between September 11, 1998 and April 11, 2002, and you chose to comply with the proposed emission limitation when demonstrating initial compliance, you must conduct a second compliance demonstration for the promulgated emission limitation by October 10, 2005, or after startup of the source, whichever is later, according to § 63.7(a)(2)(ix).

(5) *Periodic performance testing for PM or Ni.* Except as provided in paragraphs (a)(5)(i) and (ii) of this section, conduct a periodic performance test for PM or Ni for each catalytic cracking unit at least once every 5 years according to the requirements in Table 4 of this subpart. You must conduct the first periodic performance test no later than August 1, 2017 or within 150 days of startup of a new unit.

(i) Catalytic cracking units monitoring PM concentration with a PM CEMS are not required to conduct a periodic PM performance test.

(ii) Conduct a performance test annually if you comply with the emission limits in Item 1 (NSPS subpart J) or Item 4 (Option 1a) in Table 1 of this subpart and the PM emissions measured during the most recent performance source test are greater than 0.80 g/kg coke burn-off.

(6) *One-time performance testing for Hydrogen Cyanide (HCN).* Conduct a performance test for HCN from each catalytic cracking unit no later than August 1, 2017 or within 150 days of startup of a new unit according to the applicable requirements in paragraphs (a)(6)(i) and (ii) of this section.

(i) If you conducted a performance test for HCN for a specific catalytic cracking unit between March 31, 2011 and February 1, 2016, you may submit a request to the Administrator to use the previously conducted performance test

sfrattini on LAPJZKW1R2 with $$_JOB
VerDate Sep<11>2014 09:16 Apr 04, 2023 Jkt 256165 PO 00000 Frm 00150 Fmt 8010 Sfmt 8010 Q:\40\256165.XXX PC31

results to fulfill the one-time performance test requirement for HCN for each of the catalytic cracking units tested according to the requirements in paragraphs (a)(6)(i)(A) through (D) of this section.

(A) The request must include a copy of the complete source test report, the date(s) of the performance test and the test methods used. If available, you must also indicate whether the catalytic cracking unit catalyst regenerator was operated in partial or complete combustion mode during the test, the control device configuration, including whether platinum or palladium combustion promoters were used during the test, and the CO concentration (measured using CO CEMS or manual test method) for each test run.

(B) You must submit a separate request for each catalytic cracking unit tested and you must submit each request to the Administrator no later than March 30, 2016.

(C) The Administrator will evaluate each request with respect to the completeness of the request, the completeness of the submitted test report and the appropriateness of the test methods used. The Administrator will notify the facility within 60 days of receipt of the request if it is approved or denied. If the Administrator fails to respond to the facility within 60 days of receipt of the request, the request will be automatically approved.

(D) If the request is approved, you do not need to conduct an additional HCN performance test. If the request is denied, you must conduct an additional HCN performance test following the requirements in (a)(6)(ii) of this section.

(ii) Unless you receive approval to use a previously conducted performance test to fulfill the one-time performance test requirement for HCN for your catalytic cracking unit as provided in paragraph (a)(6)(i) of this section, conduct a performance test for HCN for each catalytic cracking unit no later than August 1, 2017 according to following requirements:

(A) Select sampling port location, determine volumetric flow rate, conduct gas molecular weight analysis and measure moisture content as specified in either Item 1 of Table 4 of this subpart or Item 1 of Table 11 of this subpart.

(B) Measure HCN concentration using Method 320 of appendix A of this part. The method ASTM D6348–03 (Reapproved 2010) including Annexes A1 through A8 (incorporated by reference—see §63.14) is an acceptable alternative to EPA Method 320 of appendix A of this part. The method ASTM D6348–12e1 (incorporated by reference—see §63.14) is an acceptable alternative to EPA Method 320 of appendix A of this part with the following two caveats:

(*1*) The test plan preparation and implementation in the Annexes to ASTM D6348–03 (Reapproved 2010), Sections A1 through A8 are mandatory; and

(*2*) In ASTM D6348–03 (Reapproved 2010) Annex A5 (Analyte Spiking Technique), the percent (%) R must be determined for each target analyte (Equation A5.5). In order for the test data to be acceptable for a compound, %R must be $70\% \geq R \leq 130\%$. If the %R value does not meet this criterion for a target compound, the test data is not acceptable for that compound and the test must be repeated for that analyte (*i.e.*, the sampling and/or analytical procedure should be adjusted before a retest). The %R value for each compound must be reported in the test report, and all field measurements must be corrected with the calculated %R value for that compound by using the following equation:

Reported Result = (Measured Concentration in the Stack × 100÷/% R.

(C) Measure CO concentration as specified in either Item 2 or 3a of Table 11 of this subpart.

(D) Record and include in the test report an indication of whether the catalytic cracking unit catalyst regenerator was operated in partial or complete combustion mode and the control device configuration, including whether platinum or palladium combustion promoters were used during the test.

(b) *What are the general requirements for performance test and performance evaluations?* You must:

(1) Performance tests shall be conducted according to the provisions of §63.7(e) except that performance tests shall be conducted at maximum representative operating capacity for the

sfrattini on LAPJZKW1R2 with $$_JOB
VerDate Sep<11>2014 09:16 Apr 04, 2023 Jkt 256165 PO 00000 Frm 00151 Fmt 8010 Sfmt 8010 Q:\40\256165.XXX PC31

process. During the performance test, you must operate the control device at either maximum or minimum representative operating conditions for monitored control device parameters, whichever results in lower emission reduction. You must not conduct a performance test during startup, shutdown, periods when the control device is bypassed or periods when the process, monitoring equipment or control device is not operating properly. You may not conduct performance tests during periods of malfunction. You must record the process information that is necessary to document operating conditions during the test and include in such record an explanation to support that the test was conducted at maximum representative operating capacity. Upon request, you must make available to the Administrator such records as may be necessary to determine the conditions of performance tests.

(2) Except for opacity and visible emission observations, conduct three separate test runs for each performance test as specified in § 63.7(e)(3). Each test run must last at least 1 hour.

(3) Conduct each performance evaluation according to the requirements in § 63.8(e).

(4) Calculate the average emission rate for the performance test by calculating the emission rate for each individual test run in the units of the applicable emission limitation using Equation 2, 5, or 8 of § 63.1564, and determining the arithmetic average of the calculated emission rates.

(c) *What procedures must I use for an engineering assessment?* You may choose to use an engineering assessment to calculate the process vent flow rate, net heating value, TOC emission rate, and total organic HAP emission rate expected to yield the highest daily emission rate when determining the emission reduction or outlet concentration for the organic HAP standard for catalytic reforming units. If you use an engineering assessment, you must document all data, assumptions, and procedures to the satisfaction of the applicable permitting authority. An engineering assessment may include the approaches listed in paragraphs (c)(1) through (c)(4) of this section. Other engineering assessments may be used but are subject to review and approval by the applicable permitting authority.

(1) You may use previous test results provided the tests are representative of current operating practices at the process unit, and provided EPA methods or approved alternatives were used;

(2) You may use bench-scale or pilot-scale test data representative of the process under representative operating conditions;

(3) You may use maximum flow rate, TOC emission rate, organic HAP emission rate, or organic HAP or TOC concentration specified or implied within a permit limit applicable to the process vent; or

(4) You may use design analysis based on engineering principles, measurable process parameters, or physical or chemical laws or properties. Examples of analytical methods include, but are not limited to:

(i) Use of material balances based on process stoichiometry to estimate maximum TOC concentrations;

(ii) Calculation of hourly average maximum flow rate based on physical equipment design such as pump or blower capacities; and

(iii) Calculation of TOC concentrations based on saturation conditions.

(d) *Can I adjust the process or control device measured values when establishing an operating limit?* If you do a performance test to demonstrate compliance, you must base the process or control device operating limits for continuous parameter monitoring systems on the results measured during the performance test. You may adjust the values measured during the performance test according to the criteria in paragraphs (d)(1) through (3) of this section.

(1) If you must meet the HAP metal emission limitations in § 63.1564, you elect the option in paragraph (a)(1)(v) in § 63.1564 (Ni lb/hr), and you use continuous parameter monitoring systems, you must establish an operating limit for the equilibrium catalyst Ni concentration based on the laboratory analysis of the equilibrium catalyst Ni concentration from the initial performance test. Section 63.1564(b)(2) allows you to adjust the laboratory measurements of the equilibrium catalyst Ni

sfrattini on LAPJZKW1R2 with $$_JOB
VerDate Sep<11>2014 09:16 Apr 04, 2023 Jkt 256165 PO 00000 Frm 00152 Fmt 8010 Sfmt 8010 Q:\40\256165.XXX PC31

concentration to the maximum level. You must make this adjustment using Equation 1 of this section as follows:

$$\text{Ecat-Limit} = \frac{13\ \text{g Ni/hr}}{\text{NiEmR1}_{st}} \times \text{Ecat}_{st} \qquad \text{(Eq. 1)}$$

Where:

Ecat-Limit = Operating limit for equilibrium catalyst Ni concentration, mg/kg;

NiEmR1_{st} = Average Ni emission rate calculated as the arithmetic average Ni emission rate using Equation 5 of this section for each performance test run, g Ni/hr; and

Ecat_{st} = Average equilibrium Ni concentration from laboratory test results, mg/kg.

(2) If you must meet the HAP metal emission limitations in §63.1564, you elect the option in paragraph (a)(1)(vi) in §63.1564 (Ni per coke burn-off), and you use continuous parameter monitoring systems, you must establish an operating limit for the equilibrium catalyst Ni concentration based on the laboratory analysis of the equilibrium catalyst Ni concentration from the initial performance test. Section 63.1564(b)(2) allows you to adjust the laboratory measurements of the equilibrium catalyst Ni concentration to the maximum level. You must make this adjustment using Equation 2 of this section as follows:

$$\text{Ecat-Limit} = \frac{1.0\ \text{mg/kg coke burn-off}}{\text{NiEmR2}_{st}} \times \text{Ecat}_{st} \qquad \text{(Eq. 2)}$$

Where:

NiEmR2_{st} = Average Ni emission rate calculated as the arithmetic average Ni emission rate using Equation 8 of §63.1564 for each performance test run, mg/kg coke burn-off.

(3) If you choose to adjust the equilibrium catalyst Ni concentration to the maximum level, you can't adjust any other monitored operating parameter (i.e., gas flow rate, voltage, pressure drop, liquid-to-gas ratio).

(4) Except as specified in paragraph (d)(3) of this section, if you use continuous parameter monitoring systems, you may adjust one of your monitored operating parameters (flow rate, total power and secondary current, pressure drop, liquid-to-gas ratio) from the average of measured values during the performance test to the maximum value (or minimum value, if applicable) representative of worst-case operating conditions, if necessary. This adjustment of measured values may be done using control device design specifications, manufacturer recommendations, or other applicable information. You must provide supporting documentation and rationale in your Notification of Compliance Status, demonstrating to the satisfaction of your permitting authority, that your affected source complies with the applicable emission limit at the operating limit based on adjusted values.

(e) *Can I change my operating limit?* You may change the established operating limit by meeting the requirements in paragraphs (e)(1) through (3) of this section.

(1) You may change your established operating limit for a continuous parameter monitoring system by doing an additional performance test, a performance test in conjunction with an engineering assessment, or an engineering assessment to verify that, at the new operating limit, you are in compliance with the applicable emission limitation.

(2) You must establish a revised operating limit for your continuous parameter monitoring system if you make

sfrattini on LAPJZKW1R2 with $$_JOB
VerDate Sep<11>2014 09:16 Apr 04, 2023 Jkt 256165 PO 00000 Frm 00153 Fmt 8010 Sfmt 8010 Q:\40\256165.XXX PC31
ER11AP02.017</MATH> ER11AP02.018</MATH>

any change in process or operating conditions that could affect control system performance or you change designated conditions after the last performance or compliance tests were done. You can establish the revised operating limit as described in paragraph (e)(1) of this section.

(3) You may change your site-specific opacity operating limit or Ni operating limit only by doing a new performance test.

[67 FR 17773, Apr. 11, 2002, as amended at 80 FR 75276, Dec. 1, 2015; 83 FR 60723, Nov. 26, 2018]

§ 63.1572 What are my monitoring installation, operation, and maintenance requirements?

(a) You must install, operate, and maintain each continuous emission monitoring system according to the requirements in paragraphs (a)(1) through (4) of this section.

(1) You must install, operate, and maintain each continuous emission monitoring system according to the requirements in Table 40 of this subpart.

(2) If you use a continuous emission monitoring system to meet the NSPS CO or SO_2 limit, you must conduct a performance evaluation of each continuous emission monitoring system according to the requirements in § 63.8 and Table 40 of this subpart. This requirement does not apply to an affected source subject to the NSPS that has already demonstrated initial compliance with the applicable performance specification.

(3) As specified in § 63.8(c)(4)(ii), each continuous emission monitoring system must complete a minimum of one cycle of operation (sampling, analyzing, and data recording) for each successive 15-minute period.

(4) Data must be reduced as specified in § 63.8(g)(2).

(b) You must install, operate, and maintain each continuous opacity monitoring system according to the requirements in paragraphs (b)(1) through (3) of this section.

(1) Each continuous opacity monitoring system must be installed, operated, and maintained according to the requirements in Table 40 of this subpart.

(2) If you use a continuous opacity monitoring system to meet the NSPS opacity limit, you must conduct a performance evaluation of each continuous opacity monitoring system according to the requirements in § 63.8 and Table 40 of this subpart. This requirement does not apply to an affected source subject to the NSPS that has already demonstrated initial compliance with the applicable performance specification.

(3) As specified in § 63.8(c)(4)(i), each continuous opacity monitoring system must complete a minimum of one cycle of sampling and analyzing for each successive 10-second period and one cycle of data recording for each successive 6-minute period.

(c) Except for flare monitoring systems, you must install, operate, and maintain each continuous parameter monitoring system according to the requirements in paragraphs (c)(1) through (5) of this section. For flares, on and after January 30, 2019, you must install, operate, calibrate, and maintain monitoring systems as specified in §§ 63.670 and 63.671. Prior to January 30, 2019, you must either meet the monitoring system requirements in paragraphs (c)(1) through (5) of this section or meet the requirements in §§ 63.670 and 63.671.

(1) You must install, operate, and maintain each continuous parameter monitoring system according to the requirements in Table 41 of this subpart. You must also meet the equipment specifications in Table 41 of this subpart if pH strips or colormetric tube sampling systems are used. You must meet the requirements in Table 41 of this subpart for BLD systems. Alternatively, before August 1, 2017, you may install, operate, and maintain each continuous parameter monitoring system in a manner consistent with the manufacturer's specifications or other written procedures that provide adequate assurance that the equipment will monitor accurately.

(2) The continuous parameter monitoring system must complete a minimum of one cycle of operation for each successive 15-minute period. You must have a minimum of four successive cycles of operation to have a valid

sfrattini on LAPJZKW1R2 with $$_JOB
VerDate Sep<11>2014 09:16 Apr 04, 2023 Jkt 256165 PO 00000 Frm 00154 Fmt 8010 Sfmt 8010 Q:\40\256165.XXX PC31

hour of data (or at least two if a calibration check is performed during that hour or if the continuous parameter monitoring system is out-of-control).

(3) Each continuous parameter monitoring system must have valid hourly average data from at least 75 percent of the hours during which the process operated, except for BLD systems.

(4) Each continuous parameter monitoring system must determine and record the hourly average of all recorded readings and if applicable, the daily average of all recorded readings for each operating day, except for BLD systems. The daily average must cover a 24-hour period if operation is continuous or the number of hours of operation per day if operation is not continuous, except for BLD systems.

(5) Each continuous parameter monitoring system must record the results of each inspection, calibration, and validation check.

(d) You must monitor and collect data according to the requirements in paragraphs (d)(1) and (2) of this section.

(1) Except for monitoring malfunctions, associated repairs, and required quality assurance or control activities (including as applicable, calibration checks and required zero and span adjustments), you must conduct all monitoring in continuous operation (or collect data at all required intervals) at all times the affected source is operating.

(2) You may not use data recorded during required quality assurance or control activities (including, as applicable, calibration checks and required zero and span adjustments) for purposes of this regulation, including data averages and calculations, for fulfilling a minimum data availability requirement, if applicable. You must use all the data collected during all other periods in assessing the operation of the control device and associated control system.

[67 FR 17773, Apr. 11, 2002, as amended at 70 FR 6940, Feb. 9, 2005; 80 FR 75277, Dec. 1, 2015; 83 FR 60723, Nov. 26, 2018]

§63.1573 What are my monitoring alternatives?

(a) *What are the approved alternatives for measuring gas flow rate?* (1) You may use this alternative to a continuous parameter monitoring system for the catalytic regenerator exhaust gas flow rate for your catalytic cracking unit if the unit does not introduce any other gas streams into the catalyst regeneration vent (*i.e.*, complete combustion units with no additional combustion devices). You may also use this alternative to a continuous parameter monitoring system for the catalytic regenerator atmospheric exhaust gas flow rate for your catalytic reforming unit during the coke burn and rejuvenation cycles if the unit operates as a constant pressure system during these cycles. You may also use this alternative to a continuous parameter monitoring system for the gas flow rate exiting the catalyst regenerator to determine inlet velocity to the primary internal cyclones as required in §63.1564(c)(5) regardless of the configuration of the catalytic regenerator exhaust vent downstream of the regenerator (*i.e.*, regardless of whether or not any other gas streams are introduced into the catalyst regeneration vent). Except, if you only use this alternative to demonstrate compliance with §63.1564(c)(5), you shall use this procedure for the performance test and for monitoring after the performance test. You shall:

(i) Install and operate a continuous parameter monitoring system to measure and record the hourly average volumetric air flow rate to the catalytic cracking unit or catalytic reforming unit regenerator. Or, you may determine and record the hourly average volumetric air flow rate to the catalytic cracking unit or catalytic reforming unit regenerator using the appropriate control room instrumentation.

(ii) Install and operate a continuous parameter monitoring system to measure and record the temperature of the gases entering the control device (or exiting the catalyst regenerator if you do not use an add-on control device).

(iii) Calculate and record the hourly average actual exhaust gas flow rate using Equation 1 of this section as follows:

sfrattini on LAPJZKW1R2 with $$_JOB
VerDate Sep<11>2014 09:16 Apr 04, 2023 Jkt 256165 PO 00000 Frm 00155 Fmt 8010 Sfmt 8010 Q:\40\256165.XXX PC31

$$Q_{gas} = (1.12\text{scfm/dscfm}) \times (Q_{air} + Q_{other}) \times \left(\frac{Temp_{gas}}{293^\circ K}\right) \times \left(\frac{latm.}{P_{vent}}\right) \qquad \text{(Eq. 1)}$$

Where

Q_{gas} = Hourly average actual gas flow rate, acfm;

1.12 = Default correction factor to convert gas flow from dry standard cubic feet per minute (dscfm) to standard cubic feet per minute (scfm);

Q_{air} = Volumetric flow rate of air to regenerator, as determined from the control room instrumentations, dscfm;

Q_{other} = Volumetric flow rate of other gases entering the regenerator as determined from the control room instrumentations, dscfm. (Examples of ''other'' gases include an oxygen-enriched air stream to catalytic cracking unit regenerators and a nitrogen stream to catalytic reforming unit regenerators.);

$Temp_{gas}$ = Temperature of gas stream in vent measured as near as practical to the control device or opacity monitor, °K. For wet scrubbers, temperature of gas prior to the wet scrubber; and

P_{vent} = Absolute pressure in the vent measured as near as practical to the control device or opacity monitor, as applicable, atm. When used to assess the gas flow rate in the final atmospheric vent stack, you can assume P_{vent} = 1 atm.

(2) You may use this alternative to calculating Q_r, the volumetric flow rate of exhaust gas for the catalytic cracking regenerator as required in Equation 1 of § 63.1564, if you have a gas analyzer installed in the catalytic cracking regenerator exhaust vent prior to the addition of air or other gas streams. You may measure upstream or downstream of an electrostatic precipitator, but you shall measure upstream of a carbon monoxide boiler. You shall:

(i) Install and operate a continuous parameter monitoring system to measure and record the hourly average volumetric air flow rate to the catalytic cracking unit regenerator. Or, you can determine and record the hourly average volumetric air flow rate to the catalytic cracking unit regenerator using the catalytic cracking unit control room instrumentation.

(ii) Install and operate a continuous gas analyzer to measure and record the concentration of carbon dioxide, carbon monoxide, and oxygen of the catalytic cracking regenerator exhaust.

(iii) Calculate and record the hourly average flow rate using Equation 2 of this section as follows:

$$Q_r = \frac{79 \times Q_{air} + (100 - \%O_{xy}) \times Q_{oxy}}{100 - \%CO_2 - \%CO - \%O_2} \qquad \text{(Eq. 2)}$$

Where:

Q_r = Volumetric flow rate of exhaust gas from the catalyst regenerator before adding air or gas streams, dscm/min (dscf/min);

79 = Default concentration of nitrogen and argon in dry air, percent by volume (dry basis);

$\%O_{xy}$ = Oxygen concentration in oxygen-enriched air stream, percent by volume (dry basis);

Q_{oxy} = Volumetric flow rate of oxygen-enriched air stream to regenerator as determined from the catalytic cracking unit control room instrumentations, dscm/min (dscf/min);

$\%CO_2$ = Carbon dioxide concentration in regenerator exhaust, percent by volume (dry basis);

CO = Carbon monoxide concentration in regenerator exhaust, percent by volume (dry basis); and

$\%O_2$ = Oxygen concentration in regenerator exhaust, percent by volume (dry basis).

(b) *What is the approved alternative for monitoring pressure drop?* You may use this alternative to a continuous parameter monitoring system for pressure drop if you operate a jet ejector type wet scrubber or other type of wet scrubber equipped with atomizing spray nozzles. You shall:

sfrattini on LAPJZKW1R2 with $$_JOB
VerDate Sep<11>2014 09:16 Apr 04, 2023 Jkt 256165 PO 00000 Frm 00156 Fmt 8010 Sfmt 8010 Q:\40\256165.XXX PC31
ER09FE05.008</MATH> ER09FE05.009</MATH>

(1) Conduct a daily check of the air or water pressure to the spray nozzles;

(2) Maintain records of the results of each daily check; and

(3) Repair or replace faulty (*e.g.*, leaking or plugged) air or water lines within 12 hours of identification of an abnormal pressure reading.

(c) *What is the approved alternative for monitoring pH or alkalinity levels?* You may use the alternative in paragraph (c)(1) or (2) of this section for a catalytic reforming unit.

(1) You shall measure and record the pH of the water (or scrubbing liquid) exiting the wet scrubber or internal scrubbing system at least once an hour during coke burn-off and catalyst rejuvenation using pH strips as an alternative to a continuous parameter monitoring system. The pH strips must meet the requirements in Table 41 of this subpart.

(2) You shall measure and record the alkalinity of the water (or scrubbing liquid) exiting the wet scrubber or internal scrubbing system at least once an hour during coke burn-off and catalyst rejuvenation using titration as an alternative to a continuous parameter monitoring system.

(d) *Can I use another type of monitoring system?* You may use an automated data compression system. An automated data compression system does not record monitored operating parameter values at a set frequency (*e.g.*, once every hour) but records all values that meet set criteria for variation from previously recorded values. You must maintain a record of the description of the monitoring system and data recording system, including the criteria used to determine which monitored values are recorded and retained, the method for calculating daily averages, and a demonstration that the system meets all of the criteria in paragraphs (d)(1) through (5) of this section:

(1) The system measures the operating parameter value at least once every hour;

(2) The system records at least 24 values each day during periods of operation;

(3) The system records the date and time when monitors are turned off or on;

(4) The system recognizes unchanging data that may indicate the monitor is not functioning properly, alerts the operator, and records the incident; and

(5) The system computes daily average values of the monitored operating parameter based on recorded data.

(e) *Can I monitor other process or control device operating parameters?* You may request approval to monitor parameters other than those required in this subpart. You must request approval if:

(1) You use a control device other than a thermal incinerator, boiler, process heater, flare, electrostatic precipitator, or wet scrubber;

(2) You use a combustion control device (e.g., incinerator, flare, boiler or process heater with a design heat capacity of at least 44 MW, boiler or process heater where the vent stream is introduced into the flame zone), electrostatic precipitator, or scrubber but want to monitor a parameter other than those specified; or

(3) You wish to use another type of continuous emission monitoring system that provides direct measurement of a pollutant (i.e., a PM or multi-metals HAP continuous emission monitoring system, a carbonyl sulfide/carbon disulfide continuous emission monitoring system, a TOC continuous emission monitoring system, or HCl continuous emission monitoring system).

(f) *How do I request to monitor alternative parameters?* You must submit a request for review and approval or disapproval to the Administrator. The request must include the information in paragraphs (f)(1) through (5) of this section.

(1) A description of each affected source and the parameter(s) to be monitored to determine whether the affected source will continuously comply with the emission limitations and an explanation of the criteria used to select the parameter(s).

(2) A description of the methods and procedures that will be used to demonstrate that the parameter can be used to determine whether the affected source will continuously comply with the emission limitations and the schedule for this demonstration. You must

sfrattini on LAPJZKW1R2 with $$_JOB
VerDate Sep<11>2014 09:16 Apr 04, 2023 Jkt 256165 PO 00000 Frm 00157 Fmt 8010 Sfmt 8010 Q:\40\256165.XXX PC31

certify that you will establish an operating limit for the monitored parameter(s) that represents the conditions in existence when the control device is being properly operated and maintained to meet the emission limitation.

(3) The frequency and content of monitoring, recording, and reporting, if monitoring and recording are not continuous. You also must include the rationale for the proposed monitoring, recording, and reporting requirements.

(4) Supporting calculations.

(5) Averaging time for the alternative operating parameter.

(g) *How do I apply for alternative monitoring requirements if my catalytic cracking unit is equipped with a wet scrubber and I have approved alternative monitoring requirements under the new source performance standards for petroleum refineries?* (1) You may request alternative monitoring requirements according to the procedures in this paragraph if you meet each of the conditions in paragraphs (g)(1)(i) through (iii) of this section:

(i) Your fluid catalytic cracking unit regenerator vent is subject to the PM limit in 40 CFR 60.102(a)(1) and uses a wet scrubber for PM emissions control;

(ii) You have alternative monitoring requirements for the continuous opacity monitoring system requirement in 40 CFR 60.105(a)(1) approved by the Administrator; and

(iii) You are required by this subpart to install, operate, and maintain a continuous opacity monitoring system for the same catalytic cracking unit regenerator vent for which you have approved alternative monitoring requirements.

(2) You can request approval to use an alternative monitoring method prior to submitting your notification of compliance status, in your notification of compliance status, or at any time.

(3) You must submit a copy of the approved alternative monitoring requirements along with a monitoring plan that includes a description of the continuous monitoring system or method, including appropriate operating parameters that will be monitored, test results demonstrating compliance with the opacity limit used to establish an enforceable operating limit(s), and the frequency of measuring and recording to establish continuous compliance. If applicable, you must also include operation and maintenance requirements for the continuous monitoring system.

(4) We will contact you within 30 days of receipt of your application to inform you of approval or of our intent to disapprove your request.

[67 FR 17773, Apr. 11, 2002, as amended at 70 FR 6940, Feb. 9, 2005; 80 FR 75277, Dec. 1, 2015; 83 FR 60723, Nov. 26, 2018]

NOTIFICATIONS, REPORTS, AND RECORDS

§ 63.1574 What notifications must I submit and when?

(a) Except as allowed in paragraphs (a)(1) through (3) of this section, you must submit all of the notifications in §§ 63.6(h), 63.7(b) and (c), 63.8(e), 63.8(f)(4), 63.8(f)(6), and 63.9(b) through (h) that apply to you by the dates specified.

(1) You must submit the notification of your intention to construct or reconstruct according to § 63.9(b)(5) unless construction or reconstruction had commenced and initial startup had not occurred before April 11, 2002. In this case, you must submit the notification as soon as practicable before startup but no later than July 10, 2002. This deadline also applies to the application for approval of construction or reconstruction and approval of construction or reconstruction based on State preconstruction review required in §§ 63.5(d)(1)(i) and 63.5(f)(2).

(2) You must submit the notification of intent to conduct a performance test required in § 63.7(b) at least 30 calendar days before the performance test is scheduled to begin (instead of 60 days).

(3) If you are required to conduct an initial performance test, performance evaluation, design evaluation, opacity observation, visible emission observation, or other initial compliance demonstration, you must submit a notification of compliance status according to § 63.9(h)(2)(ii). You can submit this information in an operating permit application, in an amendment to an operating permit application, in a separate submission, or in any combination. In a State with an approved operating permit program where delegation of authority under section 112(l) of the

sfrattini on LAPJZKW1R2 with $$_JOB
VerDate Sep<11>2014 09:16 Apr 04, 2023 Jkt 256165 PO 00000 Frm 00158 Fmt 8010 Sfmt 8010 Q:\40\256165.XXX PC31

CAA has not been requested or approved, you must provide a duplicate notification to the applicable Regional Administrator. If the required information has been submitted previously, you do not have to provide a separate notification of compliance status. Just refer to the earlier submissions instead of duplicating and resubmitting the previously submitted information.

(i) For each initial compliance demonstration that does not include a performance test, you must submit the Notification of Compliance Status no later than 30 calendar days following completion of the initial compliance demonstration.

(ii) For each initial compliance demonstration that includes a performance test, you must submit the notification of compliance status no later than 150 calendar days after the compliance date specified for your affected source in §63.1563. For data collected using test methods supported by the EPA's Electronic Reporting Tool (ERT) as listed on the EPA's ERT website (*https://www.epa.gov/electronic-reporting-air-emissions/electronic-reporting-tool-ert*) at the time of the test, you must submit the results in accordance with §63.1575(k)(1)(i) by the date that you submit the Notification of Compliance Status, and you must include the process unit(s) tested, the pollutant(s) tested, and the date that such performance test was conducted in the Notification of Compliance Status. For performance evaluations of continuous monitoring systems (CMS) measuring relative accuracy test audit (RATA) pollutants that are supported by the EPA's ERT as listed on the EPA's ERT website at the time of the evaluation, you must submit the results in accordance with §63.1575(k)(2)(i) by the date that you submit the Notification of Compliance Status, and you must include the process unit where the CMS is installed, the parameter measured by the CMS, and the date that the performance evaluation was conducted in the Notification of Compliance Status. All other performance test and performance evaluation results (*i.e.*, those not supported by EPA's ERT) must be reported in the Notification of Compliance Status.

(b) As specified in §63.9(b)(2), if you startup your new affected source before April 11, 2002, you must submit the initial notification no later than August 9, 2002, or no later than 120 days after the source becomes subject to this subpart, whichever is later.

(c) If you startup your new or reconstructed affected source on or after April 11, 2002, you must submit the initial notification no later than 120 days after you become subject to this subpart.

(d) You also must include the information in Table 42 of this subpart in your notification of compliance status.

(e) If you request an extension of compliance for an existing catalytic cracking unit as allowed in §63.1563(c), you must submit a notification to your permitting authority containing the required information by October 13, 2003.

(f) As required by this subpart, you must prepare and implement an operation, maintenance, and monitoring plan for each control system and continuous monitoring system for each affected source. The purpose of this plan is to detail the operation, maintenance, and monitoring procedures you will follow.

(1) You must submit the plan to your permitting authority for review and approval along with your notification of compliance status. While you do not have to include the entire plan in your permit under part 70 or 71 of this chapter, you must include the duty to prepare and implement the plan as an applicable requirement in your part 70 or 71 operating permit. You must submit any changes to your permitting authority for review and approval and comply with the plan as submitted until the change is approved.

(2) Each plan must include, at a minimum, the information specified in paragraphs (f)(2)(i) through (xii) of this section.

(i) Process and control device parameters to be monitored for each affected source, along with established operating limits.

(ii) Procedures for monitoring emissions and process and control device operating parameters for each affected source.

sfrattini on LAPJZKW1R2 with $$_JOB
VerDate Sep<11>2014 09:16 Apr 04, 2023 Jkt 256165 PO 00000 Frm 00159 Fmt 8010 Sfmt 8010 Q:\40\256165.XXX PC31

(iii) Procedures that you will use to determine the coke burn-rate, the volumetric flow rate (if you use process data rather than direct measurement), and the rate of combustion of liquid or solid fossil fuels if you use an incinerator-waste heat boiler to burn the exhaust gases from a catalyst regenerator.

(iv) Procedures and analytical methods you will use to determine the equilibrium catalyst Ni concentration, the equilibrium catalyst Ni concentration monthly rolling average, and the hourly or hourly average Ni operating value.

(v) Procedures you will use to determine the pH of the water (or scrubbing liquid) exiting a wet scrubber if you use pH strips.

(vi) Procedures you will use to determine the HCl concentration of gases from a catalytic reforming unit when you use a colormetric tube sampling system, including procedures for correcting for pressure (if applicable to the sampling equipment) and the sampling locations that will be used for compliance monitoring purposes.

(vii) Procedures you will use to determine the gas flow rate for a catalytic cracking unit if you use the alternative procedure based on air flow rate and temperature.

(viii) Monitoring schedule, including when you will monitor and when you will not monitor an affected source (e.g., during the coke burn-off, regeneration process).

(ix) Quality control plan for each continuous opacity monitoring system and continuous emission monitoring system you use to meet an emission limit in this subpart. This plan must include procedures you will use for calibrations, accuracy audits, and adjustments to the system needed to meet applicable requirements for the system.

(x) Maintenance schedule for each monitoring system and control device for each affected source that is generally consistent with the manufacturer's instructions for routine and long-term maintenance.

(xi) If you use a fixed-bed gas-solid adsorption system to control emissions from a catalytic reforming unit, you must implement corrective action procedures if the HCl concentration measured at the selected compliance monitoring sampling location within the bed exceeds the operating limit. These procedures must require, at minimum, repeat measurement and recording of the HCl concentration in the adsorption system exhaust gases and at the selected compliance monitoring sampling location within the bed. If the HCl concentration at the selected compliance monitoring location within the bed is above the operating limit during the repeat measurement while the HCl concentration in the adsorption system exhaust gases remains below the operating limit, the adsorption bed must be replaced as soon as practicable. Your procedures must specify the sampling frequency that will be used to monitor the HCl concentration in the adsorption system exhaust gases subsequent to the repeat measurement and prior to replacement of the sorbent material (but not less frequent than once every 4 hours during coke burn-off). If the HCl concentration of the adsorption system exhaust gases is above the operating limit when measured at any time, the adsorption bed must be replaced within 24 hours or before the next regeneration cycle, whichever is longer.

(xii) Procedures that will be used for purging the catalyst if you do not use a control device to comply with the organic HAP emission limits for catalytic reforming units. These procedures will include, but are not limited to, specification of the minimum catalyst temperature and the minimum cumulative volume of gas per mass of catalyst used for purging prior to uncontrolled releases (i.e., during controlled purging events); the maximum purge gas temperature for uncontrolled purge events; and specification of the monitoring systems that will be used to monitor and record data during each purge event.

[67 FR 17773, Apr. 11, 2002, as amended at 70 FR 6941, Feb. 9, 2005; 80 FR 75278, Dec. 1, 2015; 83 FR 60724, Nov. 26, 2018; 85 FR 73901, Nov. 19, 2020]

sfrattini on LAPJZKW1R2 with $$_JOB
VerDate Sep<11>2014 09:16 Apr 04, 2023 Jkt 256165 PO 00000 Frm 00160 Fmt 8010 Sfmt 8010 Q:\40\256165.XXX PC31

§63.1575 What reports must I submit and when?

(a) You must submit each report in Table 43 of this subpart that applies to you.

(b) Unless the Administrator has approved a different schedule, you must submit each report by the date in Table 43 of this subpart and according to the requirements in paragraphs (b)(1) through (5) of this section.

(1) The first compliance report must cover the period beginning on the compliance date that is specified for your affected source in §63.1563 and ending on June 30 or December 31, whichever date is the first date following the end of the first calendar half after the compliance date that is specified for your affected source in §63.1563.

(2) The first compliance report must be postmarked or delivered no later than July 31 or January 31, whichever date follows the end of the first calendar half after the compliance date that is specified for your affected source in §63.1563.

(3) Each subsequent compliance report must cover the semiannual reporting period from January 1 through June 30 or the semiannual reporting period from July 1 through December 31.

(4) Each subsequent compliance report must be postmarked or delivered no later than July 31 or January 31, whichever date is the first date following the end of the semiannual reporting period.

(5) For each affected source that is subject to permitting regulations pursuant to part 70 or 71 of this chapter, and if the permitting authority has established dates for submitting semiannual reports pursuant to §70.6(a)(3)(iii)(A) or §71.6(a)(3)(iii)(A) of this chapter, you may submit the first and subsequent compliance reports according to the dates the permitting authority has established instead of according to the dates in paragraphs (b)(1) through (4) of this section.

(c) The compliance report must contain the information required in paragraphs (c)(1) through (4) of this section.

(1) Company name and address.

(2) Statement by a responsible official, with that official's name, title, and signature, certifying the accuracy of the content of the report.

(3) Date of report and beginning and ending dates of the reporting period.

(4) If there are no deviations from any emission limitation that applies to you and there are no deviations from the requirements for work practice standards, a statement that there were no deviations from the emission limitations or work practice standards during the reporting period and that no continuous emission monitoring system or continuous opacity monitoring system was inoperative, inactive, malfunctioning, out-of-control, repaired, or adjusted.

(d) For each deviation from an emission limitation and for each deviation from the requirements for work practice standards that occurs at an affected source where you are not using a continuous opacity monitoring system or a continuous emission monitoring system to comply with the emission limitation or work practice standard in this subpart, the semiannual compliance report must contain the information in paragraphs (c)(1) through (3) of this section and the information in paragraphs (d)(1) through (4) of this section.

(1) The total operating time of each affected source during the reporting period and identification of the sources for which there was a deviation.

(2) Information on the number, date, time, duration, and cause of deviations (including unknown cause, if applicable).

(3) Information on the number, duration, and cause for monitor downtime incidents (including unknown cause, if applicable, other than downtime associated with zero and span and other daily calibration checks).

(4) The applicable operating limit or work practice standard from which you deviated and either the parameter monitor reading during the deviation or a description of how you deviated from the work practice standard.

(e) For each deviation from an emission limitation occurring at an affected source where you are using a continuous opacity monitoring system or a continuous emission monitoring system to comply with the emission

sfrattini on LAPJZKW1R2 with $$_JOB
VerDate Sep<11>2014 09:16 Apr 04, 2023 Jkt 256165 PO 00000 Frm 00161 Fmt 8010 Sfmt 8010 Q:\40\256165.XXX PC31

limitation, you must include the information in paragraphs (c)(1) through (3) of this section, in paragraphs (d)(1) through (3) of this section, and in paragraphs (e)(2) through (13) of this section.

(1) [Reserved]

(2) The date and time that each continuous opacity monitoring system or continuous emission monitoring system was inoperative, except for zero (low-level) and high-level checks.

(3) The date and time that each continuous opacity monitoring system or continuous emission monitoring system was out-of-control, including the information in § 63.8(c)(8).

(4) An estimate of the quantity of each regulated pollutant emitted over the emission limit during the deviation, and a description of the method used to estimate the emissions.

(5) A summary of the total duration of the deviation during the reporting period (recorded in minutes for opacity and hours for gases and in the averaging period specified in the regulation for other types of emission limitations), and the total duration as a percent of the total source operating time during that reporting period.

(6) A breakdown of the total duration of the deviations during the reporting period and into those that are due to control equipment problems, process problems, other known causes, and other unknown causes.

(7) A summary of the total duration of downtime for the continuous opacity monitoring system or continuous emission monitoring system during the reporting period (recorded in minutes for opacity and hours for gases and in the averaging time specified in the regulation for other types of standards), and the total duration of downtime for the continuous opacity monitoring system or continuous emission monitoring system as a percent of the total source operating time during that reporting period.

(8) A breakdown of the total duration of downtime for the continuous opacity monitoring system or continuous emission monitoring system during the reporting period into periods that are due to monitoring equipment malfunctions, non-monitoring equipment malfunctions, quality assurance/quality control calibrations, other known causes, and other unknown causes.

(9) An identification of each HAP that was monitored at the affected source.

(10) A brief description of the process units.

(11) The monitoring equipment manufacturer(s) and model number(s).

(12) The date of the latest certification or audit for the continuous opacity monitoring system or continuous emission monitoring system.

(13) A description of any change in the continuous emission monitoring system or continuous opacity monitoring system, processes, or controls since the last reporting period.

(f) You also must include the information required in paragraphs (f)(1) through (2) of this section in each compliance report, if applicable.

(1) A copy of any performance test or performance evaluation of a CMS done during the reporting period on any affected unit, if applicable. The report must be included in the next semiannual compliance report. The copy must include a complete report for each test method used for a particular kind of emission point tested. For additional tests performed for a similar emission point using the same method, you must submit the results and any other information required, but a complete test report is not required. A complete test report contains a brief process description; a simplified flow diagram showing affected processes, control equipment, and sampling point locations; sampling site data; description of sampling and analysis procedures and any modifications to standard procedures; quality assurance procedures; record of operating conditions during the test; record of preparation of standards; record of calibrations; raw data sheets for field sampling; raw data sheets for field and laboratory analyses; documentation of calculations; and any other information required by the test method. For data collected using test methods supported by the EPA's Electronic Reporting Tool (ERT) as listed on the EPA's ERT website (*https://www.epa.gov/electronic-reporting-air-emissions/electronic-reporting-tool-ert*) at the time of the test, you must submit the results in accordance

sfrattini on LAPJZKW1R2 with $$_JOB
VerDate Sep<11>2014 09:16 Apr 04, 2023 Jkt 256165 PO 00000 Frm 00162 Fmt 8010 Sfmt 8010 Q:\40\256165.XXX PC31

with paragraph (k)(1)(i) of this section by the date that you submit the compliance report, and instead of including a copy of the test report in the compliance report, you must include the process unit(s) tested, the pollutant(s) tested, and the date that such performance test was conducted in the compliance report. For performance evaluations of CMS measuring relative accuracy test audit (RATA) pollutants that are supported by the EPA's ERT as listed on the EPA's ERT website at the time of the evaluation, you must submit the results in accordance with paragraph (k)(2)(i) of this section by the date that you submit the compliance report, and you must include the process unit where the CMS is installed, the parameter measured by the CMS, and the date that the performance evaluation was conducted in the compliance report. All other performance test and performance evaluation results (*i.e.*, those not supported by EPA's ERT) must be reported in the compliance report.

(2) Any requested change in the applicability of an emission standard (*e.g.*, you want to change from the PM standard to the Ni standard for catalytic cracking units or from the HCl concentration standard to percent reduction for catalytic reforming units) in your compliance report. You must include all information and data necessary to demonstrate compliance with the new emission standard selected and any other associated requirements.

(g) You may submit reports required by other regulations in place of or as part of the compliance report if they contain the required information.

(h) [Reserved]

(i) If the applicable permitting authority has approved a period of planned maintenance for your catalytic cracking unit according to the requirements in paragraph (j) of this section, you must include the following information in your compliance report.

(1) In the compliance report due for the 6-month period before the routine planned maintenance is to begin, you must include a full copy of your written request to the applicable permitting authority and written approval received from the applicable permitting authority.

(2) In the compliance report due after the routine planned maintenance is complete, you must include a description of the planned routine maintenance that was performed for the control device during the previous 6-month period, and the total number of hours during those 6 months that the control device did not meet the emission limitations and monitoring requirements as a result of the approved routine planned maintenance.

(j) If you own or operate multiple catalytic cracking units that are served by a single wet scrubber emission control device (e.g., a Venturi scrubber), you may request the applicable permitting authority to approve a period of planned routine maintenance for the control device needed to meet requirements in your operation, maintenance, and monitoring plan. You must present data to the applicable permitting authority demonstrating that the period of planned maintenance results in overall emissions reductions. During this pre-approved time period, the emission control device may be taken out of service while maintenance is performed on the control device and/or one of the process units while the remaining process unit(s) continue to operate. During the period the emission control device is unable to operate, the emission limits, operating limits, and monitoring requirements applicable to the unit that is operating and the wet scrubber emission control device do not apply. The applicable permitting authority may require that you take specified actions to minimize emissions during the period of planned maintenance.

(1) You must submit a written request to the applicable permitting authority at least 6 months before the planned maintenance is scheduled to begin with a copy to the EPA Regional Administrator.

(2) Your written request must contain the information in paragraphs (j)(2)(i) through (v) of this section.

(i) A description of the planned routine maintenance to be performed during the next 6 months and why it is necessary.

(ii) The date the planned maintenance will begin and end.

sfrattini on LAPJZKW1R2 with $$_JOB
VerDate Sep<11>2014 09:16 Apr 04, 2023 Jkt 256165 PO 00000 Frm 00163 Fmt 8010 Sfmt 8010 Q:\40\256165.XXX PC31

(iii) A quantified estimate of the HAP and criteria pollutant emissions that will be emitted during the period of planned maintenance.

(iv) An analysis showing the emissions reductions resulting from the planned maintenance as opposed to delaying the maintenance until the next unit turnaround.

(v) Actions you will take to minimize emissions during the period of planned maintenance.

(k) *Electronic submittal of performance test and CEMS performance evaluation data.* For performance tests or CEMS performance evaluations conducted on and after February 1, 2016, if required to submit the results of a performance test or CEMS performance evaluation, you must submit the results according to the procedures in paragraphs (k)(1) and (2) of this section.

(1) Unless otherwise specified by this subpart, within 60 days after the date of completing each performance test as required by this subpart, you must submit the results of the performance tests following the procedure specified in either paragraph (k)(1)(i) or (ii) of this section.

(i) For data collected using test methods supported by the EPA's Electronic Reporting Tool (ERT) as listed on the EPA's ERT Web site (*http://www.epa.gov/ttn/chief/ert/index.html*) at the time of the test, you must submit the results of the performance test to the EPA via the Compliance and Emissions Data Reporting Interface (CEDRI). (CEDRI can be accessed through the EPA's Central Data Exchange (CDX) (*https://cdx.epa.gov/*).) Performance test data must be submitted in a file format generated through use of the EPA's ERT or an alternate electronic file format consistent with the extensible markup language (XML) schema listed on the EPA's ERT Web site. If you claim that some of the performance test information being submitted is confidential business information (CBI), you must submit a complete file generated through the use of the EPA's ERT or an alternate electronic file consistent with the XML schema listed on the EPA's ERT Web site, including information claimed to be CBI, on a compact disc, flash drive or other commonly used electronic storage media to the EPA. The electronic storage media must be clearly marked as CBI and mailed to U.S. EPA/OAQPS/CORE CBI Office, Attention: Group Leader, Measurement Policy Group, MD C404–02, 4930 Old Page Rd., Durham, NC 27703. The same ERT or alternate file with the CBI omitted must be submitted to the EPA via the EPA's CDX as described earlier in this paragraph (k)(1)(i).

(ii) For data collected using test methods that are not supported by the EPA's ERT as listed on the EPA's ERT Web site at the time of the test, you must submit the results of the performance test to the Administrator at the appropriate address listed in § 63.13.

(2) Unless otherwise specified by this subpart, within 60 days after the date of completing each CEMS performance evaluation required by § 63.1571(a) and (b), you must submit the results of the performance evaluation following the procedure specified in either paragraph (k)(2)(i) or (ii) of this section.

(i) For performance evaluations of continuous monitoring systems measuring relative accuracy test audit (RATA) pollutants that are supported by the EPA's ERT as listed on the EPA's ERT Web site at the time of the evaluation, you must submit the results of the performance evaluation to the EPA via the CEDRI. (CEDRI is accessed through the EPA's CDX.) Performance evaluation data must be submitted in a file format generated through the use of the EPA's ERT or an alternate file format consistent with the XML schema listed on the EPA's ERT Web site. If you claim that some of the performance evaluation information being submitted is CBI, you must submit a complete file generated through the use of the EPA's ERT or an alternate electronic file consistent with the XML schema listed on the EPA's ERT Web site, including information claimed to be CBI, on a compact disc, flash drive or other commonly used electronic storage media to the EPA. The electronic storage media must be clearly marked as CBI and mailed to U.S. EPA/OAQPS/CORE CBI Office, Attention: Group Leader, Measurement Policy Group, MD C404–02, 4930 Old Page Rd., Durham, NC 27703.

sfrattini on LAPJZKW1R2 with $$_JOB
VerDate Sep<11>2014 09:16 Apr 04, 2023 Jkt 256165 PO 00000 Frm 00164 Fmt 8010 Sfmt 8010 Q:\40\256165.XXX PC31

The same ERT or alternate file with the CBI omitted must be submitted to the EPA via the EPA's CDX as described earlier in this paragraph (k)(2)(i).

(ii) For any performance evaluations of continuous monitoring systems measuring RATA pollutants that are not supported by the EPA's ERT as listed on the EPA's ERT Web site at the time of the evaluation, you must submit the results of the performance evaluation to the Administrator at the appropriate address listed in §63.13.

(l) *Extensions to electronic reporting deadlines.* (1) If you are required to electronically submit a report through the Compliance and Emissions Data Reporting Interface (CEDRI) in the EPA's Central Data Exchange (CDX), and due to a planned or actual outage of either the EPA's CEDRI or CDX systems within the period of time beginning 5 business days prior to the date that the submission is due, you will be or are precluded from accessing CEDRI or CDX and submitting a required report within the time prescribed, you may assert a claim of EPA system outage for failure to timely comply with the reporting requirement. You must submit notification to the Administrator in writing as soon as possible following the date you first knew, or through due diligence should have known, that the event may cause or caused a delay in reporting. You must provide to the Administrator a written description identifying the date(s) and time(s) the CDX or CEDRI were unavailable when you attempted to access it in the 5 business days prior to the submission deadline; a rationale for attributing the delay in reporting beyond the regulatory deadline to the EPA system outage; describe the measures taken or to be taken to minimize the delay in reporting; and identify a date by which you propose to report, or if you have already met the reporting requirement at the time of the notification, the date you reported. In any circumstance, the report must be submitted electronically as soon as possible after the outage is resolved. The decision to accept the claim of EPA system outage and allow an extension to the reporting deadline is solely within the discretion of the Administrator.

(2) If you are required to electronically submit a report through CEDRI in the EPA's CDX and a force majeure event is about to occur, occurs, or has occurred or there are lingering effects from such an event within the period of time beginning 5 business days prior to the date the submission is due, the owner or operator may assert a claim of force majeure for failure to timely comply with the reporting requirement. For the purposes of this section, a force majeure event is defined as an event that will be or has been caused by circumstances beyond the control of the affected facility, its contractors, or any entity controlled by the affected facility that prevents you from complying with the requirement to submit a report electronically within the time period prescribed. Examples of such events are acts of nature (*e.g.*, hurricanes, earthquakes, or floods), acts of war or terrorism, or equipment failure or safety hazard beyond the control of the affected facility (*e.g.*, large scale power outage). If you intend to assert a claim of force majeure, you must submit notification to the Administrator in writing as soon as possible following the date you first knew, or through due diligence should have known, that the event may cause or caused a delay in reporting. You must provide to the Administrator a written description of the force majeure event and a rationale for attributing the delay in reporting beyond the regulatory deadline to the force majeure event; describe the measures taken or to be taken to minimize the delay in reporting; and identify a date by which you propose to report, or if you have already met the reporting requirement at the time of the notification, the date you reported. In any circumstance, the reporting must occur as soon as possible after the force majeure event occurs. The decision to accept the claim of force majeure and allow an extension to the reporting deadline is solely within the discretion of the Administrator.

[67 FR 17773, Apr. 11, 2002, as amended at 80 FR 75278, Dec. 1, 2015; 83 FR 60724, Nov. 26, 2018]

sfrattini on LAPJZKW1R2 with $$_JOB
VerDate Sep<11>2014 09:16 Apr 04, 2023 Jkt 256165 PO 00000 Frm 00165 Fmt 8010 Sfmt 8010 Q:\40\256165.XXX PC31

§ 63.1576 What records must I keep, in what form, and for how long?

(a) You must keep the records specified in paragraphs (a)(1) through (3) of this section.

(1) A copy of each notification and report that you submitted to comply with this subpart, including all documentation supporting any initial notification or Notification of Compliance Status that you submitted, according to the requirements in § 63.10(b)(2)(xiv).

(2) The records specified in paragraphs (a)(2)(i) through (iv) of this section.

(i) Record the date, time, and duration of each startup and/or shutdown period for which the facility elected to comply with the alternative standards in § 63.1564(a)(5)(ii) or § 63.1565(a)(5)(ii) or § 63.1568(a)(4)(ii) or (iii).

(ii) In the event that an affected unit fails to meet an applicable standard, record the number of failures. For each failure record the date, time and duration of each failure.

(iii) For each failure to meet an applicable standard, record and retain a list of the affected sources or equipment, an estimate of the volume of each regulated pollutant emitted over any emission limit and a description of the method used to estimate the emissions.

(iv) Record actions taken to minimize emissions in accordance with § 63.1570(c) and any corrective actions taken to return the affected unit to its normal or usual manner of operation.

(3) Records of performance tests, performance evaluations, and opacity and visible emission observations as required in § 63.10(b)(2)(viii).

(b) For each continuous emission monitoring system and continuous opacity monitoring system, you must keep the records required in paragraphs (b)(1) through (5) of this section.

(1) Records described in § 63.10(b)(2)(vi) through (xi).

(2) Monitoring data for continuous opacity monitoring systems during a performance evaluation as required in § 63.6(h)(7)(i) and (ii).

(3) The performance evaluation plan as described in § 63.8(d)(2) for the life of the affected source or until the affected source is no longer subject to the provisions of this part, to be made available for inspection, upon request, by the Administrator. If the performance evaluation plan is revised, you must keep previous (*i.e.*, superseded) versions of the performance evaluation plan on record to be made available for inspection, upon request, by the Administrator, for a period of 5 years after each revision to the plan. The program of corrective action should be included in the plan required under § 63.8(d)(2).

(4) Requests for alternatives to the relative accuracy test for continuous emission monitoring systems as required in § 63.8(f)(6)(i).

(5) Records of the date and time that each deviation started and stopped.

(c) You must keep the records in § 63.6(h) for visible emission observations.

(d) You must keep records required by Tables 6, 7, 13, and 14 of this subpart (for catalytic cracking units); Tables 20, 21, 27 and 28 of this subpart (for catalytic reforming units); Tables 34 and 35 of this subpart (for sulfur recovery units); and Table 39 of this subpart (for bypass lines) to show continuous compliance with each emission limitation that applies to you.

(e) You must keep a current copy of your operation, maintenance, and monitoring plan onsite and available for inspection. You also must keep records to show continuous compliance with the procedures in your operation, maintenance, and monitoring plan.

(f) You also must keep the records of any changes that affect emission control system performance including, but not limited to, the location at which the vent stream is introduced into the flame zone for a boiler or process heater.

(g) Your records must be in a form suitable and readily available for expeditious review according to § 63.10(b)(1).

(h) As specified in § 63.10(b)(1), you must keep each record for 5 years following the date of each occurrence, measurement, maintenance, corrective action, report, or record.

(i) You must keep each record on site for at least 2 years after the date of each occurrence, measurement, maintenance, corrective action, report, or record, according to § 63.10(b)(1). You

sfrattini on LAPJZKW1R2 with $$_JOB
VerDate Sep<11>2014 09:16 Apr 04, 2023 Jkt 256165 PO 00000 Frm 00166 Fmt 8010 Sfmt 8010 Q:\40\256165.XXX PC31

can keep the records offsite for the remaining 3 years.

[67 FR 17773, Apr. 11, 2002, as amended at 70 FR 6942, Feb. 9, 2005; 80 FR 75279, Dec. 1, 2015; 83 FR 60725, Nov. 26, 2018]

OTHER REQUIREMENTS AND INFORMATION

§ 63.1577 What parts of the General Provisions apply to me?

Table 44 of this subpart shows which parts of the General Provisions in §§ 63.1 through 63.15 apply to you.

§ 63.1578 Who implements and enforces this subpart?

(a) This subpart can be implemented and enforced by us, the U.S. EPA, or a delegated authority such as your State, local, or tribal agency. If the U.S. EPA Administrator has delegated authority to your State, local, or tribal agency, then that Agency has the authority to implement and enforce this subpart. You should contact your U.S. EPA Regional Office to find out if this subpart is delegated to your State, local, or tribal agency.

(b) In delegating implementation and enforcement authority of this subpart to a State, local, or tribal agency under 40 CFR part 63, subpart E, the authorities contained in paragraph (c) of this section are retained by the Administrator of the U.S. EPA and are not transferred to the State, local, or tribal agency.

(c) The authorities that will not be delegated to State, local, or tribal agencies are listed in paragraphs (c)(1) through (5) of this section.

(1) Approval of alternatives to the non-opacity emission limitations and work practice standards in §§ 63.1564 through 63.1569 under § 63.6(g).

(2) Approval of alternative opacity emission limitations in §§ 63.1564 through 63.1569 under § 63.6(h)(9).

(3) Approval of major alternatives to test methods under § 63.7(e)(2)(ii) and (f) and as defined in § 63.90.

(4) Approval of major alternatives to monitoring under § 63.8(f) and as defined in § 63.90.

(5) Approval of major alternatives to recordkeeping and reporting under § 63.10(f) and as defined in § 63.90.

§ 63.1579 What definitions apply to this subpart?

Terms used in this subpart are defined in the Clean Air Act (CAA), in 40 CFR 63.2, the General Provisions of this part (§§ 63.1 through 63.15), and in this section as listed. If the same term is defined in subpart A of this part and in this section, it shall have the meaning given in this section for purposes of this subpart.

Boiler means any enclosed combustion device that extracts useful energy in the form of steam and is not an incinerator.

Catalytic cracking unit means a refinery process unit in which petroleum derivatives are continuously charged; hydrocarbon molecules in the presence of a catalyst suspended in a fluidized bed are fractured into smaller molecules, or react with a contact material suspended in a fluidized bed to improve feedstock quality for additional processing; and the catalyst or contact material is continuously regenerated by burning off coke and other deposits. The unit includes, but is not limited to, the riser, reactor, regenerator, air blowers, spent catalyst or contact material stripper, catalyst or contact material recovery equipment, and regenerator equipment for controlling air pollutant emissions and equipment used for heat recovery.

Catalytic cracking unit catalyst regenerator means one or more regenerators (multiple regenerators) which comprise that portion of the catalytic cracking unit in which coke burn-off and catalyst or contact material regeneration occurs and includes the regenerator combustion air blower(s).

Catalytic reforming unit means a refinery process unit that reforms or changes the chemical structure of naphtha into higher octane aromatics through the use of a metal catalyst and chemical reactions that include dehydrogenation, isomerization, and hydrogenolysis. The catalytic reforming unit includes the reactor, regenerator (if separate), separators, catalyst isolation and transport vessels (e.g., lock and lift hoppers), recirculation equipment, scrubbers, and other ancillary equipment.

Catalytic reforming unit regenerator means one or more regenerators which

sfrattini on LAPJZKW1R2 with $$_JOB
VerDate Sep<11>2014 09:16 Apr 04, 2023 Jkt 256165 PO 00000 Frm 00167 Fmt 8010 Sfmt 8010 Q:\40\256165.XXX PC31

comprise that portion of the catalytic reforming unit and ancillary equipment in which the following regeneration steps typically are performed: depressurization, purge, coke burn-off, catalyst rejuvenation with a chloride (or other halogenated) compound(s), and a final purge. The catalytic reforming unit catalyst regeneration process can be done either as a semi-regenerative, cyclic, or continuous regeneration process.

Coke burn-off means the coke removed from the surface of the catalytic cracking unit catalyst or the catalytic reforming unit catalyst by combustion in the catalyst regenerator. The rate of coke burn-off is calculated using Equation 2 in § 63.1564.

Combustion device means an individual unit of equipment such as a flare, incinerator, process heater, or boiler used for the destruction of organic HAP or VOC.

Combustion zone means the space in an enclosed combustion device (e.g., vapor incinerator, boiler, furnace, or process heater) occupied by the organic HAP and any supplemental fuel while burning. The combustion zone includes any flame that is visible or luminous as well as that space outside the flame envelope in which the organic HAP continues to be oxidized to form the combustion products.

Contact material means any substance formulated to remove metals, sulfur, nitrogen, or any other contaminants from petroleum derivatives.

Continuous regeneration reforming means a catalytic reforming process characterized by continuous flow of catalyst material through a reactor where it mixes with feedstock, and a portion of the catalyst is continuously removed and sent to a special regenerator where it is regenerated and continuously recycled back to the reactor.

Control device means any equipment used for recovering, removing, or oxidizing HAP in either gaseous or solid form. Such equipment includes, but is not limited to, condensers, scrubbers, electrostatic precipitators, incinerators, flares, boilers, and process heaters.

Cyclic regeneration reforming means a catalytic reforming process characterized by continual batch regeneration of catalyst in situ in any one of several reactors (e.g., 4 or 5 separate reactors) that can be isolated from and returned to the reforming operation while maintaining continuous reforming process operations (i.e., feedstock continues flowing through the remaining reactors without change in feed rate or product octane).

Deviation means any instance in which an affected source subject to this subpart, or an owner or operator of such a source:

(1) Fails to meet any requirement or obligation established by this subpart, including but not limited to any emission limit, operating limit, or work practice standard; or

(2) Fails to meet any term or condition that is adopted to implement an applicable requirement in this subpart and that is included in the operating permit for any affected source required to obtain such a permit.

Emission limitation means any emission limit, opacity limit, operating limit, or visible emission limit.

Flame zone means the portion of a combustion chamber of a boiler or process heater occupied by the flame envelope created by the primary fuel.

Flow indicator means a device that indicates whether gas is flowing, or whether the valve position would allow gas to flow, in or through a line.

Fuel gas system means the offsite and onsite piping and control system that gathers gaseous streams generated by the source, may blend them with sources of gas, if available, and transports the blended gaseous fuel at suitable pressures for use as fuel in heaters, furnaces, boilers, incinerators, gas turbines, and other combustion devices located within or outside of the refinery. The fuel is piped directly to each individual combustion device, and the system typically operates at pressures over atmospheric. The gaseous streams can contain a mixture of methane, light hydrocarbons, hydrogen, and other miscellaneous species.

HCl means for the purposes of this subpart, gaseous emissions of hydrogen chloride that serve as a surrogate measure for total emissions of hydrogen chloride and chlorine as measured by Method 26 or 26A in appendix A to

sfrattini on LAPJZKW1R2 with $$_JOB
VerDate Sep<11>2014 09:16 Apr 04, 2023 Jkt 256165 PO 00000 Frm 00168 Fmt 8010 Sfmt 8010 Q:\40\256165.XXX PC31

part 60 of this chapter or an approved alternative method.

Hot standby means periods when the catalytic cracking unit is not receiving fresh or recycled feed oil but the catalytic cracking unit is maintained at elevated temperatures, typically using torch oil in the catalyst regenerator and recirculating catalyst, to prevent a complete shutdown and cold restart of the catalytic cracking unit.

Incinerator means an enclosed combustion device that is used for destroying organic compounds, with or without heat recovery. Auxiliary fuel may be used to heat waste gas to combustion temperatures. An incinerator may use a catalytic combustion process where a substance is introduced into an exhaust stream to burn or oxidize contaminants while the substances itself remains intact, or a thermal process which uses elevated temperatures as a primary means to burn or oxidize contaminants.

Internal scrubbing system means a wet scrubbing, wet injection, or caustic injection control device that treats (in-situ) the catalytic reforming unit recirculating coke burn exhaust gases for acid (HCl) control during reforming catalyst regeneration upstream of the atmospheric coke burn vent.

Ni means, for the purposes of this subpart, particulate emissions of nickel that serve as a surrogate measure for total emissions of metal HAP, including but not limited to: antimony, arsenic, beryllium, cadmium, chromium, cobalt, lead, manganese, nickel, and selenium as measured by Method 29 in appendix A to part 60 of this chapter or by an approved alternative method.

Nonmethane TOC means, for the purposes of this subpart, emissions of total organic compounds, excluding methane, that serve as a surrogate measure of the total emissions of organic HAP compounds including, but not limited to, acetaldehyde, benzene, hexane, phenol, toluene, and xylenes and nonHAP VOC as measured by Method 25 in appendix A to part 60 of this chapter, by the combination of Methods 18 and 25A in appendix A to part 60 of this chapter, or by an approved alternative method.

Oxidation control system means an emission control system which reduces emissions from sulfur recovery units by converting these emissions to sulfur dioxide.

PM means, for the purposes of this subpart, emissions of particulate matter that serve as a surrogate measure of the total emissions of particulate matter and metal HAP contained in the particulate matter, including but not limited to: Antimony, arsenic, beryllium, cadmium, chromium, cobalt, lead, manganese, nickel, and selenium as measured by Methods 5, 5B or 5F in appendix A–3 to part 60 of this chapter or by an approved alternative method.

Process heater means an enclosed combustion device that primarily transfers heat liberated by burning fuel directly to process streams or to heat transfer liquids other than water.

Process vent means, for the purposes of this subpart, a gas stream that is continuously or periodically discharged during normal operation of a catalytic cracking unit, catalytic reforming unit, or sulfur recovery unit, including gas streams that are discharged directly to the atmosphere, gas streams that are routed to a control device prior to discharge to the atmosphere, or gas streams that are diverted through a product recovery device line prior to control or discharge to the atmosphere.

Reduced sulfur compounds means hydrogen sulfide, carbonyl sulfide, and carbon disulfide.

Reduction control system means an emission control system which reduces emissions from sulfur recovery units by converting these emissions to hydrogen sulfide.

Responsible official means responsible official as defined in 40 CFR 70.2.

Semi-regenerative reforming means a catalytic reforming process characterized by shutdown of the entire reforming unit (e.g., which may employ three to four separate reactors) at specified intervals or at the owner's or operator's convenience for in situ catalyst regeneration.

Sulfur recovery unit means a process unit that recovers elemental sulfur from gases that contain reduced sulfur

sfrattini on LAPJZKW1R2 with $$_JOB
VerDate Sep<11>2014 09:16 Apr 04, 2023 Jkt 256165 PO 00000 Frm 00169 Fmt 8010 Sfmt 8010 Q:\40\256165.XXX PC31

compounds and other pollutants, usually by a vapor-phase catalytic reaction of sulfur dioxide and hydrogen sulfide. This definition does not include a unit where the modified reaction is carried out in a water solution which contains a metal ion capable of oxidizing the sulfide ion to sulfur, e.g., the LO-CAT II process.

TOC means, for the purposes of this subpart, emissions of total organic compounds that serve as a surrogate measure of the total emissions of organic HAP compounds including, but not limited to, acetaldehyde, benzene, hexane, phenol, toluene, and xylenes and nonHAP VOC as measured by Method 25A in appendix A to part 60 of this chapter or by an approved alternative method.

TRS means, for the purposes of this subpart, emissions of total reduced sulfur compounds, expressed as an equivalent sulfur dioxide concentration, that serve as a surrogate measure of the total emissions of sulfide HAP carbonyl sulfide and carbon disulfide as measured by Method 15 in appendix A to part 60 of this chapter or by an approved alternative method.

Work practice standard means any design, equipment, work practice, or operational standard, or combination thereof, that is promulgated pursuant to section 112(h) of the CAA.

[67 FR 17773, Apr. 11, 2002, as amended at 70 FR 6942, Feb. 9, 2005; 80 FR 75279, Dec. 1, 2015]

TABLE 1 TO SUBPART UUU OF PART 63—METAL HAP EMISSION LIMITS FOR CATALYTIC CRACKING UNITS

As stated in §63.1564(a)(1), you shall meet each emission limitation in the following table that applies to you.

For each new or existing catalytic cracking unit . . .	You shall meet the following emission limits for each catalyst regenerator vent . . .
1. Subject to new source performance standard (NSPS) for PM in 40 CFR 60.102 and not electing §60.100(e).	PM emissions must not exceed 1.0 gram per kilogram (g/kg) (1.0 lb/1,000 lb) of coke burn-off, and the opacity of emissions must not exceed 30 percent, except for one 6-minute average opacity reading in any 1-hour period. Before August 1, 2017, if the discharged gases pass through an incinerator or waste heat boiler in which you burn auxiliary or in supplemental liquid or solid fossil fuel, the incremental rate of PM emissions must not exceed 43.0 grams per Gigajoule (g/GJ) or 0.10 pounds per million British thermal units (lb/million Btu) of heat input attributable to the liquid or solid fossil fuel; and the opacity of emissions must not exceed 30 percent, except for one 6-minute average opacity reading in any 1-hour period.
2. Subject to NSPS for PM in 40 CFR 60.102a(b)(1)(i); or 40 CFR 60.102 and electing §60.100(e).	PM emissions must not exceed 1.0 g/kg (1.0 lb PM/1,000 lb) of coke burn-off or, if a PM CEMS is used, 0.040 grain per dry standard cubic feet (gr/dscf) corrected to 0 percent excess air.
3. Subject to NSPS for PM in 40 CFR 60.102a(b)(1)(ii)	PM emissions must not exceed 0.5 g/kg coke burn-off (0.5 lb/1000 lb coke burn-off) or, if a PM CEMS is used, 0.020 gr/dscf corrected to 0 percent excess air.
4. Option 1a: Elect NSPS subpart J requirements for PM per coke burn limit and 30% opacity, not subject to the NSPS for PM in 40 CFR 60.102 or 60.102a(b)(1).	PM emissions must not exceed the limits specified in Item 1 of this table.
5. Option 1b: Elect NSPS subpart Ja requirements for PM per coke burn-off limit, not subject to the NSPS for PM in 40 CFR 60.102 or 60.102a(b)(1).	PM emissions must not exceed 1.0 g/kg (1.0 lb PM/1000 lb) of coke burn-off.
6. Option 1c: Elect NSPS subpart Ja requirements for PM concentration limit, not subject to the NSPS for PM in 40 CFR 60.102 or 60.102a(b)(1).	PM emissions must not exceed 0.040 gr/dscf corrected to 0 percent excess air.
7. Option 2: PM per coke burn-off limit, not subject to the NSPS for PM in 40 CFR 60.102 or 60.102a(b)(1).	PM emissions must not exceed 1.0 g/kg (1.0 lb PM/1000 lb) of coke burn-off in the catalyst regenerator.
8. Option 3: Ni lb/hr limit, not subject to the NSPS for PM in 40 CFR 60.102 or 60.102a(b)(1).	Nickel (Ni) emissions must not exceed 13,000 milligrams per hour (mg/hr) (0.029 lb/hr).
9. Option 4: Ni per coke burn-off limit, not subject to the NSPS for PM in 40 CFR 60.102 or 60.102a(b)(1).	Ni emissions must not exceed 1.0 mg/kg (0.001 lb/1,000 lb) of coke burn-off in the catalyst regenerator.

[80 FR 75280, Dec. 1, 2015]

sfrattini on LAPJZKW1R2 with $$_JOB
VerDate Sep<11>2014 09:16 Apr 04, 2023 Jkt 256165 PO 00000 Frm 00170 Fmt 8010 Sfmt 8026 Q:\40\256165.XXX PC31

TABLE 2 TO SUBPART UUU OF PART 63—OPERATING LIMITS FOR METAL HAP EMISSIONS FROM CATALYTIC CRACKING UNITS

As stated in § 63.1564(a)(2), you shall meet each operating limit in the following table that applies to you.

For each new or existing catalytic cracking unit . . .	For this type of continuous monitoring system . . .	For this type of control device . . .	You shall meet this operating limit . . .
1. Subject to the NSPS for PM in 40 CFR 60.102 and not elect § 60.100(e).	Continuous opacity monitoring system.	Any	On and after August 1, 2017, maintain the 3-hour rolling average opacity of emissions from your catalyst regenerator vent no higher than 20 percent.
2. Subject to NSPS for PM in 40 CFR 60.102a(b)(1)(i) or electing § 60.100(e).	a. PM CEMS	Any	Not applicable.
	b. Continuous opacity monitoring system used to comply with a site-specific opacity limit.	Cyclone or electrostatic precipitator.	Maintain the 3-hour rolling average opacity of emissions from your catalyst regenerator vent no higher than the site-specific opacity limit established during the performance test.
	c. Continuous parameter monitoring systems.	Electrostatic precipitator	i. Maintain the daily average coke burn-off rate or daily average flow rate no higher than the limit established in the performance test. ii. Maintain the 3-hour rolling average total power and secondary current above the limit established in the performance test.
	d. Continuous parameter monitoring systems.	Wet scrubber	i. Maintain the 3-hour rolling average liquid-to-gas ratio above the limit established in the performance test. ii. Except for periods of start-up, shutdown, and hot standby, maintain the 3-hour rolling average pressure drop above the limit established in the performance test.[1]
	e. Bag leak detection (BLD) system.	Fabric filter	Maintain particulate loading below the BLD alarm set point established in the initial adjustment of the BLD system or allowable seasonal adjustments.
3. Subject to NSPS for PM in 40 CFR 60.102a(b)(1)(ii).	Any	Any	The applicable operating limits in Item 2 of this table.
4. Option 1a: Elect NSPS subpart J requirements for PM per coke burn limit, not subject to the NSPS for PM in 40 CFR 60.102 or 60.102a(b)(1).	Any	Any	See Item 1 of this table.
5. Option 1b: Elect NSPS subpart Ja requirements for PM per coke burn-off limit, not subject to the NSPS for PM in 40 CFR 60.102 or 60.102a(b)(1).	Any	Any	The applicable operating limits in Item 2.b, 2.c, 2.d, and 2.e of this table.
6. Option 1c: Elect NSPS subpart Ja requirements for PM concentration limit, not subject to the NSPS for PM in 40 CFR 60.102 or 60.102a(b)(1).	PM CEMS	Any	Not applicable.

sfrattini on LAPJZKW1R2 with $$_JOB
VerDate Sep<11>2014 09:16 Apr 04, 2023 Jkt 256165 PO 00000 Frm 00171 Fmt 8010 Sfmt 8002 Q:\40\256165.XXX PC31

For each new or existing catalytic cracking unit . . .	For this type of continuous monitoring system . . .	For this type of control device . . .	You shall meet this operating limit . . .
7. Option 2: PM per coke burn-off limit not subject to the NSPS for PM in 40 CFR 60.102 or 60.102a(b)(1).	a. Continuous opacity monitoring system used to comply with a site-specific opacity limit.	Cyclone, fabric filter, or electrostatic precipitator.	See Item 2.b of this table. Alternatively, before August 1, 2017, you may maintain the hourly average opacity of emissions from your catalyst generator vent no higher than the site-specific opacity limit established during the performance test.
	b. Continuous parameter monitoring systems.	i. Electrostatic precipitator	(1) See Item 2.c.i of this table. (2) See item 2.c.ii of this table. Alternatively, before August 1, 2017, you may maintain the daily average voltage and secondary current above the limit established in the performance test.
		ii. Wet scrubber	(1) See Item 2.d.i of this table. Alternatively, before August 1, 2017, you may maintain the daily average liquid-to-gas ratio above the limit established in the performance test. (2) See Item 2.d.ii of the table. Alternatively, before August 1, 2017, you may maintain the daily average pressure drop above the limit established in the performance test (not applicable to a wet scrubber of the non-venturi jet-ejector design).
	c. Bag leak detection (BLD) system.	Fabric filter	See item 2.e of this table.
8. Option 3: Ni lb/hr limit not subject to the NSPS for PM in 40 CFR 60.102.	a. Continuous opacity monitoring system.	Cyclone, fabric filter, or electrostatic precipitator.	Maintain the 3-hour rolling average Ni operating value no higher than the limit established during the performance test. Alternatively, before August 1, 2017, you may maintain the daily average Ni operating value no higher than the limit established during the performance test.
	b. Continuous parameter monitoring systems.	i. Electrostatic precipitator	(1) See Item 2.c.i of this table. (2) Maintain the monthly rolling average of the equilibrium catalyst Ni concentration no higher than the limit established during the performance test. (3) See Item 2.c.ii of this table. Alternatively, before August 1, 2017, you may maintain the daily average voltage and secondary current (or total power input) above the established during the performance test.
		ii. Wet scrubber	(1) Maintain the monthly rolling average of the equilibrium catalyst Ni concentration no higher than the limit established during the performance test.

sfrattini on LAPJZKW1R2 with $$_JOB
VerDate Sep<11>2014 09:16 Apr 04, 2023 Jkt 256165 PO 00000 Frm 00172 Fmt 8010 Sfmt 8002 Q:\40\256165.XXX PC31

For each new or existing catalytic cracking unit . . .	For this type of continuous monitoring system . . .	For this type of control device . . .	You shall meet this operating limit . . .
			(2) See Item 2.d.i of this table. Alternatively, before August 1, 2017, you may maintain the daily average liquid-to-gas ratio above the limit established during the performance test. (3) See Item 2.d.ii of this table. Alternatively, before August 1, 2017, you may maintain the daily average pressure drop above the limit established during the performance test (not applicable to a non-venturi wet scrubber of the jet-ejector design).
	c. Bag leak detection (BLD) system.	Fabric filter	See item 2.e of this table.
9. Option 4: Ni per coke burn-off limit not subject to the NSPS for PM in 40 CFR 60.102.	a. Continuous opacity monitoring system.	Cyclone, fabric filter, or electrostatic precipitator.	Maintain the 3-hour rolling average Ni operating value no higher than Ni operating limit established during the performance test. Alternatively, before August 1, 2017, you may elect to maintain the daily average Ni operating value no higher than the Ni operating limit established during the performance test.
	b. Continuous parameter monitoring systems.	i. Electrostatic precipitator	(1) Maintain the monthly rolling average of the equilibrium catalyst Ni concentration no higher than the limit established during the performance test. (2) See Item 2.c.ii of this table. Alternatively, before August 1, 2017, you may maintain the daily average voltage and secondary current (or total power input) above the limit established during the performance test.
		ii. Wet scrubber	(1) Maintain the monthly rolling average of the equilibrium catalyst Ni concentration no higher than the limit established during the performance test. (2) See Item 2.d.i of this table. Alternatively, before August 1, 2017, you may maintain the daily average liquid-to-gas ratio above the limit established during the performance test. (3) See Item 2.d.ii of this table. Alternatively, before August 1, 2017, you may maintain the daily average pressure drop above the limit established during the performance test (not applicable to a non-venturi wet scrubber of the jet-ejector design).
	c. Bag leak detection (BLD) system.	Fabric filter	See item 2.e of this table.

sfrattini on LAPJZKW1R2 with $$_JOB
VerDate Sep<11>2014 09:16 Apr 04, 2023 Jkt 256165 PO 00000 Frm 00173 Fmt 8010 Sfmt 8002 Q:\40\256165.XXX PC31

For each new or existing catalytic cracking unit . . .	For this type of continuous monitoring system . . .	For this type of control device . . .	You shall meet this operating limit . . .
10. During periods of startup, shutdown, or hot standby.	Any	Any	Meet the requirements in § 63.1564(a)(5).

[1] If you use a jet ejector type wet scrubber or other type of wet scrubber equipped with atomizing spray nozzles, you can use the alternative in § 63.1573(b), and comply with the daily inspections, recordkeeping, and repair provisions, instead of a continuous parameter monitoring system for pressure drop across the scrubber.

[80 FR 75280, Dec. 1, 2015, as amended at 81 FR 45244, July 13, 2016]

TABLE 3 TO SUBPART UUU OF PART 63—CONTINUOUS MONITORING SYSTEMS FOR METAL HAP EMISSIONS FROM CATALYTIC CRACKING UNITS

As stated in § 63.1564(b)(1), you shall meet each requirement in the following table that applies to you.

For each new or existing catalytic cracking unit . . .	If you use this type of control device for your vent . . .	You shall install, operate, and maintain a . . .
1. Subject to the NSPS for PM in 40 CFR 60.102 and not electing § 60.100(e).	Any	Continuous opacity monitoring system to measure and record the opacity of emissions from each catalyst regenerator vent.
2. Subject to NSPS for PM in 40 CFR 60.102a(b)(1)(i); or in § 60.102 and electing § 60.100(e); electing to meet the PM per coke burn-off limit.	a. Cyclone	Continuous opacity monitoring system to measure and record the opacity of emissions from each catalyst regenerator vent.
	b. Electrostatic precipitator	Continuous opacity monitoring system to measure and record the opacity of emissions from each catalyst regenerator vent; or continuous parameter monitoring systems to measure and record the coke burn-off rate or the gas flow rate entering or exiting the control device,[1] the voltage, current, and secondary current to the control device.
	c. Wet scrubber	Continuous parameter monitoring system to measure and record the pressure drop across the scrubber,[2] the gas flow rate entering or exiting the control device,[1] and total liquid (or scrubbing liquor) flow rate to the control device.
	d. Fabric Filter	Continuous bag leak detection system to measure and record increases in relative particulate loading from each catalyst regenerator vent.
3. Subject to NSPS for PM in 40 CFR 60.102a(b)(1)(i); or in § 60.102 and electing § 60.100(e); electing to meet the PM concentration limit.	Any	Continuous emission monitoring system to measure and record the concentration of PM and oxygen from each catalyst regenerator vent.
4. Subject to NSPS for PM in 40 CFR 60.102a(b)(1)(ii) electing to meet the PM per coke burn-off limit.	Any	The applicable continuous monitoring systems in item 2 of this table.
5. Subject to NSPS for PM in 40 CFR 60.102a(b)(1)(ii) electing to meet the PM concentration limit.	Any	See item 3 of this table.
6. Option 1a: Elect NSPS subpart J, PM per coke burn-off limit, not subject to the NSPS for PM in 40 CFR 60.102 or 60.102a(b)(1).	Any	See item 1 of this table.
7. Option 1b: Elect NSPS subpart Ja, PM per coke burn-off limit, not subject to the NSPS for PM in 40 CFR 60.102 or 60.102a(b)(1).	Any	The applicable continuous monitoring systems in item 2 of this table.
8. Option 1c: Elect NSPS subpart Ja, PM concentration limit not subject to the NSPS for PM in 40 CFR 60.102 or 60.102a(b)(1).	Any	See item 3 of this table.
9. Option 2: PM per coke burn-off limit, not subject to the NSPS for PM in 40 CFR 60.102 or 60.102a(b)(1).	Any	The applicable continuous monitoring systems in item 2 of this table.

sfrattini on LAPJZKW1R2 with $$_JOB
VerDate Sep<11>2014 09:16 Apr 04, 2023 Jkt 256165 PO 00000 Frm 00174 Fmt 8010 Sfmt 8002 Q:\40\256165.XXX PC31

For each new or existing catalytic cracking unit . . .	If you use this type of control device for your vent . . .	You shall install, operate, and maintain a . . .
10. Option 3: Ni lb/hr limit not subject to the NSPS for PM in 40 CFR 60.102 or 60.102a(b)(1).	a. Cyclone	Continuous opacity monitoring system to measure and record the opacity of emissions from each catalyst regenerator vent and continuous parameter monitoring system to measure and record the gas flow rate entering or exiting the control device.[1]
	b. Electrostatic precipitator	Continuous opacity monitoring system to measure and record the opacity of emissions from each catalyst regenerator vent and continuous parameter monitoring system to measure and record the gas flow rate entering or exiting the control device[1]; or continuous parameter monitoring systems to measure and record the coke burn-off rate or the gas flow rate entering or exiting the control device[1] and the voltage and current (to measure the total power to the system) and secondary current to the control device.
	c. Wet scrubber	Continuous parameter monitoring system to measure and record the pressure drop across the scrubber,[2] gas flow rate entering or exiting the control device,[1] and total liquid (or scrubbing liquor) flow rate to the control device.
	d. Fabric Filter	Continuous bag leak detection system to measure and record increases in relative particulate loading from each catalyst regenerator vent or the monitoring systems specified in item 10.a of this table.
11. Option 4: Ni per coke burn-off limit not subject to the NSPS for PM in 40 CFR 60.102 or 60.102a(b)(1).	a. Cyclone	Continuous opacity monitoring system to measure and record the opacity of emissions from each catalyst regenerator vent and continuous parameter monitoring system to measure and record the coke burn-off rate and the gas flow rate entering or exiting the control device.[1]
	b. Electrostatic precipitator	Continuous opacity monitoring system to measure and record the opacity of emissions from each catalyst regenerator vent and continuous parameter monitoring system to measure and record the coke burn-off rate and the gas flow rate entering or exiting the control device[1]; or continuous parameter monitoring systems to measure and record the coke burn-off rate or the gas flow rate entering or exiting the control device[1] and voltage and current (to measure the total power to the system) and secondary current to the control device.
	c. Wet scrubber	Continuous parameter monitoring system to measure and record the pressure drop across the scrubber,[2] gas flow rate entering or exiting the control device,[1] and total liquid (or scrubbing liquor) flow rate to the control device.
	d. Fabric Filter	Continuous bag leak detection system to measure and record increases in relative particulate loading from each catalyst regenerator vent or the monitoring systems specified in item 11.a of this table.
12. Electing to comply with the operating limits in § 63.1564(a)(5)(ii) during periods of startup, shutdown, or hot standby.	Any	Continuous parameter monitoring system to measure and record the gas flow rate exiting the catalyst regenerator.[1]

[1] If applicable, you can use the alternative in § 63.1573(a)(1) instead of a continuous parameter monitoring system for gas flow rate.

[2] If you use a jet ejector type wet scrubber or other type of wet scrubber equipped with atomizing spray nozzles, you can use the alternative in § 63.1573(b) instead of a continuous parameter monitoring system for pressure drop across the scrubber.

[80 FR 75283, Dec. 1, 2015, as amended at 81 FR 45244, July 13, 2016; 83 FR 60725, Nov. 26, 2018]

Table 4 to Subpart UUU of Part 63—Requirements for Performance Tests for Metal HAP Emissions From Catalytic Cracking Units

As stated in §§ 63.1564(b)(2) and 63.1571(a)(5), you shall meet each requirement in the following table that applies to you.

sfrattini on LAPJZKW1R2 with $$_JOB
VerDate Sep<11>2014 09:16 Apr 04, 2023 Jkt 256165 PO 00000 Frm 00175 Fmt 8010 Sfmt 8026 Q:\40\256165.XXX PC31

For each new or existing catalytic cracking unit catalyst regenerator vent . . .	You must . . .	Using . . .	According to these requirements . . .
1. Any	a. Select sampling port's location and the number of traverse ports.	Method 1 or 1A in appendix A–1 to part 60 of this chapter.	Sampling sites must be located at the outlet of the control device or the outlet of the regenerator, as applicable, and prior to any releases to the atmosphere.
	b. Determine velocity and volumetric flow rate.	Method 2, 2A, 2C, 2D, or 2F in appendix A–1 to part 60 of this chapter, or Method 2G in appendix A–2 to part 60 of this chapter, as applicable.	
	c. Conduct gas molecular weight analysis.	Method 3, 3A, or 3B in appendix A–2 to part 60 of this chapter, as applicable.	
	d. Measure moisture content of the stack gas.	Method 4 in appendix A–3 to part 60 of this chapter.	
	e. If you use an electrostatic precipitator, record the total number of fields in the control system and how many operated during the applicable performance test.		
	f. If you use a wet scrubber, record the total amount (rate) of water (or scrubbing liquid) and the amount (rate) of make-up liquid to the scrubber during each test run.		
2. Subject to the NSPS for PM in 40 CFR 60.102 and not elect § 60.100(e).	a. Measure PM emissions.	Method 5, 5B, or 5F (40 CFR part 60, appendix A–3) to determine PM emissions and associated moisture content for units without wet scrubbers. Method 5 or 5B (40 CFR part 60, appendix A–3) to determine PM emissions and associated moisture content for unit with wet scrubber.	You must maintain a sampling rate of at least 0.15 dry standard cubic meters per minute (dscm/min) (0.53 dry standard cubic feet per minute (dscf/min)).
	b. Compute coke burn-off rate and PM emission rate (lb/1,000 lb of coke burn-off).	Equations 1, 2, and 3 of § 63.1564 (if applicable).	
	c. Measure opacity of emissions.	Continuous opacity monitoring system	You must collect opacity monitoring data every 10 seconds during the entire period of the Method 5, 5B, or 5F performance test and reduce the data to 6-minute averages.
3. Subject to the NSPS for PM in 40 CFR 60.102a(b)(1) or elect § 60.100(e), electing the PM for coke burn-off limit.	a. Measure PM emissions.	Method 5, 5B, or 5F (40 CFR part 60, appendix A–3) to determine PM emissions and associated moisture content for units without wet scrubbers. Method 5 or 5B (40 CFR part 60, appendix A–3) to determine PM emissions and associated moisture content for unit with wet scrubber.	You must maintain a sampling rate of at least 0.15 dscm/min (0.53 dscf/min).
	b. Compute coke burn-off rate and PM emission rate (lb/1,000 lb of coke burn-off).	Equations 1, 2, and 3 of § 63.1564 (if applicable).	

sfrattini on LAPJZKW1R2 with $$_JOB
VerDate Sep<11>2014 09:16 Apr 04, 2023 Jkt 256165 PO 00000 Frm 00176 Fmt 8010 Sfmt 8026 Q:\40\256165.XXX PC31

For each new or existing catalytic cracking unit catalyst regenerator vent . . .	You must . . .	Using . . .	According to these requirements . . .
	c. Establish site-specific limit if you use a COMS.	Continuous opacity monitoring system	If you elect to comply with the site-specific opacity limit in § 63.1564(b)(4)(i), you must collect opacity monitoring data every 10 seconds during the entire period of the Method 5, 5B, or 5F performance test. For site specific opacity monitoring, reduce the data to 6-minute averages; determine and record the average opacity for each test run; and compute the site-specific opacity limit using Equation 4 of § 63.1564.
4. Subject to the NSPS for PM in 40 CFR 60.102a(b)(1) or elect § 60.100(e).	a. Measure PM emissions.	Method 5, 5B, or 5F (40 CFR part 60, appendix A–3) to determine PM emissions and associated moisture content for units without wet scrubbers. Method 5 or 5B (40 CFR part 60, appendix A–3) to determine PM emissions and associated moisture content for unit with wet scrubber.	You must maintain a sampling rate of at least 0.15 dscm/min (0.53 dscf/min).
5. Option 1a: Elect NSPS subpart J requirements for PM per coke burn-off limit, not subject to the NSPS for PM in 40 CFR 60.102 or 60.102a(b)(1).	See item 2 of this table.		
6. Option 1b: Elect NSPS subpart Ja requirements for PM per coke burn-off limit, not subject to the NSPS for PM in 40 CFR 60.102 or 60.102a(b)(1).	See item 3 of this table.		
7. Option 1c: Elect NSPS requirements for PM concentration, not subject to the NSPS for PM in 40 CFR 60.102 or 60.102a(b)(1).	See item 4 of this table.		
8. Option 2: PM per coke burn-off limit, not subject to the NSPS for PM in 40 CFR 60.102 or 60.102a(b)(1).	See item 3 of this table.		
9. Option 3: Ni lb/hr limit, not subject to the NSPS for PM in 40 CFR 60.102 or 60.102a(b)(1).	a. Measure concentration of Ni. b. Compute Ni emission rate (lb/hr).	Method 29 (40 CFR part 60, appendix A–8) Equation 5 of § 63.1564.	
	c. Determine the equilibrium catalyst Ni concentration.	XRF procedure in appendix A to this subpart;[1] or EPA Method 6010B or 6020 or EPA Method 7520 or 7521 in SW–8462; or an alternative to the SW–846 method satisfactory to the Administrator.	You must obtain 1 sample for each of the 3 test runs; determine and record the equilibrium catalyst Ni concentration for each of the 3 samples; and you may adjust the laboratory results to the maximum value using Equation 1 of § 63.1571, if applicable.

sfrattini on LAPJZKW1R2 with $$_JOB
VerDate Sep<11>2014 09:16 Apr 04, 2023 Jkt 256165 PO 00000 Frm 00177 Fmt 8010 Sfmt 8026 Q:\40\256165.XXX PC31

For each new or existing catalytic cracking unit catalyst regenerator vent . . .	You must . . .	Using . . .	According to these requirements . . .
	d. If you use a continuous opacity monitoring system, establish your site-specific Ni operating limit.	i. Equations 6 and 7 of § 63.1564 using data from continuous opacity monitoring system, gas flow rate, results of equilibrium catalyst Ni concentration analysis, and Ni emission rate from Method 29 test.	(1) You must collect opacity monitoring data every 10 seconds during the entire period of the initial Ni performance test; reduce the data to 6-minute averages; and determine and record the average opacity from all the 6-minute averages for each test run. (2) You must collect gas flow rate monitoring data every 15 minutes during the entire period of the initial Ni performance test; measure the gas flow as near as practical to the continuous opacity monitoring system; and determine and record the hourly average actual gas flow rate for each test run.
10. Option 4: Ni per coke burn-off limit, not subject to the NSPS for PM in 40 CFR 60.102 or 60.102a(b)(1).	a. Measure concentration of Ni. b. Compute Ni emission rate (lb/1,000 lb of coke burn-off).	Method 29 (40 CFR part 60, appendix A–8). Equations 1 and 8 of § 63.1564.	
	c. Determine the equilibrium catalyst Ni concentration.	See item 9.c. of this table	You must obtain 1 sample for each of the 3 test runs; determine and record the equilibrium catalyst Ni concentration for each of the 3 samples; and you may adjust the laboratory results to the maximum value using Equation 2 of § 63.1571, if applicable.
	d. If you use a continuous opacity monitoring system, establish your site-specific Ni operating limit.	i. Equations 9 and 10 of § 63.1564 with data from continuous opacity monitoring system, coke burn-off rate, results of equilibrium catalyst Ni concentration analysis, and Ni emission rate from Method 29 test.	(1) You must collect opacity monitoring data every 10 seconds during the entire period of the initial Ni performance test; reduce the data to 6-minute averages; and determine and record the average opacity from all the 6-minute averages for each test run. (2) You must collect gas flow rate monitoring data every 15 minutes during the entire period of the initial Ni performance test; measure the gas flow rate as near as practical to the continuous opacity monitoring system; and determine and record the hourly average actual gas flow rate for each test run.
	e. Record the catalyst addition rate for each test and schedule for the 10-day period prior to the test.		
11. If you elect item 5 Option 1b in Table 1, item 7 Option 2 in Table 1, item 8 Option 3 in Table 1, or item 9 Option 4 in Table 1 of this subpart and you use continuous parameter monitoring systems.	a. Establish each operating limit in Table 2 of this subpart that applies to you.	Data from the continuous parameter monitoring systems and applicable performance test methods.	
	b. Electrostatic precipitator or wet scrubber: Gas flow rate.	i. Data from the continuous parameter monitoring systems and applicable performance test methods.	(1) You must collect gas flow rate monitoring data every 15 minutes during the entire period of the initial performance test; determine and record the average gas flow rate for each test run.

sfrattini on LAPJZKW1R2 with $$_JOB
VerDate Sep<11>2014 09:16 Apr 04, 2023 Jkt 256165 PO 00000 Frm 00178 Fmt 8010 Sfmt 8026 Q:\40\256165.XXX PC31

For each new or existing catalytic cracking unit catalyst regenerator vent . . .	You must . . .	Using . . .	According to these requirements . . .
			(2) You must determine and record the 3-hr average gas flow rate from the test runs. Alternatively, before August 1, 2017, you may determine and record the maximum hourly average gas flow rate from all the readings.
	c. Electrostatic precipitator: Total power (voltage and current) and secondary current.	i. Data from the continuous parameter monitoring systems and applicable performance test methods.	(1) You must collect voltage, current, and secondary current monitoring data every 15 minutes during the entire period of the performance test; and determine and record the average voltage, current, and secondary current for each test run. Alternatively, before August 1, 2017, you may collect voltage and secondary current (or total power input) monitoring data every 15 minutes during the entire period of the initial performance test. (2) You must determine and record the 3-hr average total power to the system for the test runs and the 3-hr average secondary current from the test runs. Alternatively, before August 1, 2017, you may determine and record the minimum hourly average voltage and secondary current (or total power input) from all the readings.
	d. Electrostatic precipitator or wet scrubber: Equilibrium catalyst Ni concentration.	Results of analysis for equilibrium catalyst Ni concentration.	You must determine and record the average equilibrium catalyst Ni concentration for the 3 runs based on the laboratory results. You may adjust the value using Equation 1 or 2 of § 63.1571 as applicable.
	e. Wet scrubber: Pressure drop (not applicable to non-venturi scrubber of jet ejector design).	i. Data from the continuous parameter monitoring systems and applicable performance test methods.	(1) You must collect pressure drop monitoring data every 15 minutes during the entire period of the initial performance test; and determine and record the average pressure drop for each test run. (2) You must determine and record the 3-hr average pressure drop from the test runs. Alternatively, before August 1, 2017, you may determine and record the minimum hourly average pressure drop from all the readings.
	f. Wet scrubber: Liquid-to-gas ratio.	i. Data from the continuous parameter monitoring systems and applicable performance test methods.	(1) You must collect gas flow rate and total water (or scrubbing liquid) flow rate monitoring data every 15 minutes during the entire period of the initial performance test; determine and record the average gas flow rate for each test run; and determine the average total water (or scrubbing liquid) flow for each test run. (2) You must determine and record the hourly average liquid-to-gas ratio from the test runs. Alternatively, before August 1, 2017, you may determine and record the hourly average gas flow rate and total water (or scrubbing liquid) flow rate from all the readings.

sfrattini on LAPJZKW1R2 with $$_JOB
VerDate Sep<11>2014 09:16 Apr 04, 2023 Jkt 256165 PO 00000 Frm 00179 Fmt 8010 Sfmt 8026 Q:\40\256165.XXX PC31

For each new or existing catalytic cracking unit catalyst regenerator vent . . .	You must . . .	Using . . .	According to these requirements . . .
	g. Alternative procedure for gas flow rate.	i. Data from the continuous parameter monitoring systems and applicable performance test methods.	(3) You must determine and record the 3-hr average liquid-to-gas ratio. Alternatively, before August 1, 2017, you may determine and record the minimum liquid-to-gas ratio. (1) You must collect air flow rate monitoring data or determine the air flow rate using control room instrumentation every 15 minutes during the entire period of the initial performance test. (2) You must determine and record the 3-hr average rate of all the readings from the test runs. Alternatively, before August 1, 2017, you may determine and record the hourly average rate of all the readings. (3) You must determine and record the maximum gas flow rate using Equation 1 of § 63.1573.

[1] Determination of Metal Concentration on Catalyst Particles (Instrumental Analyzer Procedure).

[2] EPA Method 6010B, Inductively Coupled Plasma-Atomic Emission Spectrometry, EPA Method 6020, Inductively Coupled Plasma-Mass Spectrometry, EPA Method 7520, Nickel Atomic Absorption, Direct Aspiration, and EPA Method 7521, Nickel Atomic Absorption, Direct Aspiration are included in ''Test Methods for Evaluating Solid Waste, Physical/Chemical Methods,'' EPA Publication SW–846, Revision 5 (April 1998). The SW–846 and Updates (document number 955–001–00000–1) are available for purchase from the Superintendent of Documents, U.S. Government Publishing Office, Washington, DC 20402, (202) 512–1800; and from the National Technical Information Services (NTIS), 5285 Port Royal Road, Springfield, VA 22161, (703) 487–4650. Copies may be inspected at the EPA Docket Center, William Jefferson Clinton (WJC) West Building (Air Docket), Room 3334, 1301 Constitution Ave. NW, Washington, DC; or at the Office of the Federal Register, 800 North Capitol Street NW, Suite 700, Washington, DC.

[85 FR 6083, Feb. 4, 2020]

TABLE 5 TO SUBPART UUU OF PART 63—INITIAL COMPLIANCE WITH METAL HAP EMISSION LIMITS FOR CATALYTIC CRACKING UNITS

As stated in § 63.1564(b)(5), you shall meet each requirement in the following table that applies to you.

For each new and existing catalytic cracking unit catalyst regenerator vent . . .	For the following emission limit . . .	You have demonstrated initial compliance if . . .
1. Subject to the NSPS for PM in 40 CFR 60.102 and not electing § 60.100(e).	PM emissions must not exceed 1.0 g/kg (1.0 lb/1,000 lb) of coke burn-off, and the opacity of emissions must not exceed 30 percent, except for one 6-minute average opacity reading in any 1-hour period. Before August 1, 2017, if the discharged gases pass through an incinerator or waste heat boiler in which you burn auxiliary or supplemental liquid or solid fossil fuel, the incremental rate of PM must not exceed 43.0 g/GJ or 0.10 lb/million Btu of heat input attributable to the liquid or solid fossil fuel; and the opacity of emissions must not exceed 30 percent, except for one 6-minute average opacity reading in any 1-hour period.	You have already conducted a performance test to demonstrate initial compliance with the NSPS and the measured PM emission rate is less than or equal to 1.0 g/kg (1.0 lb/1,000 lb) of coke burn-off in the catalyst regenerator. As part of the Notification of Compliance Status, you must certify that your vent meets the PM limit. You are not required to do another performance test to demonstrate initial compliance. You have already conducted a performance test to demonstrate initial compliance with the NSPS and the average hourly opacity is no more than 30 percent, except that one 6-minute average in any 1-hour period can exceed 30 percent. As part of the Notification of Compliance Status, you must certify that your vent meets the 30 percent opacity limit. As part of your Notification of Compliance Status, you certify that your continuous opacity monitoring system meets the requirements in § 63.1572.

sfrattini on LAPJZKW1R2 with $$_JOB
VerDate Sep<11>2014 09:16 Apr 04, 2023 Jkt 256165 PO 00000 Frm 00180 Fmt 8010 Sfmt 8002 Q:\40\256165.XXX PC31

For each new and existing catalytic cracking unit catalyst regenerator vent . . .	For the following emission limit . . .	You have demonstrated initial compliance if . . .
2. Subject to NSPS for PM in 40 CFR 60.102a(b)(1)(i); or in § 60.102 and electing § 60.100(e) and electing to meet the PM per coke burn-off limit.	PM emissions must not exceed 1.0 g/kg (1.0 lb PM/1,000 lb) of coke burn-off.	You have already conducted a performance test to demonstrate initial compliance with the NSPS and the measured PM emission rate is less than or equal to 1.0 g/kg (1.0 lb/1,000 lb) of coke burn-off in the catalyst regenerator. As part of the Notification of Compliance Status, you must certify that your vent meets the PM limit. You are not required to do another performance test to demonstrate initial compliance. As part of your Notification of Compliance Status, you certify that your BLD; CO_2, O_2, or CO monitor; or continuous opacity monitoring system meets the requirements in § 63.1572.
3. Subject to NSPS for PM in 40 CFR 60.102a(b)(1)(ii), electing to meet the PM per coke burn-off limit.	PM emissions must not exceed 0.5 g/kg (0.5 lb PM/1,000 lb) of coke burn-off).	You have already conducted a performance test to demonstrate initial compliance with the NSPS and the measured PM emission rate is less than or equal to 0.5 g/kg (0.5 lb/1,000 lb) of coke burn-off in the catalyst regenerator. As part of the Notification of Compliance Status, you must certify that your vent meets the PM limit. You are not required to do another performance test to demonstrate initial compliance. As part of your Notification of Compliance Status, you certify that your BLD; CO_2, O_2, or CO monitor; or continuous opacity monitoring system meets the requirements in § 63.1572.
4. Subject to NSPS for PM in 40 CFR 60.102a(b)(1)(i), electing to meet the PM concentration limit.	If a PM CEMS is used, 0.040 grain per dry standard cubic feet (gr/dscf) corrected to 0 percent excess air.	You have already conducted a performance test to demonstrate initial compliance with the NSPS and the measured PM concentration is less than or equal to 0.040 grain per dry standard cubic feet (gr/dscf) corrected to 0 percent excess air. As part of the Notification of Compliance Status, you must certify that your vent meets the PM limit. You are not required to do another performance test to demonstrate initial compliance. As part of your Notification of Compliance Status, you certify that your PM CEMS meets the requirements in § 63.1572.
5. Subject to NSPS for PM in 40 CFR 60.102a(b)(1)(ii), electing to meet the PM concentration limit.	If a PM CEMS is used, 0.020 gr/dscf corrected to 0 percent excess air.	You have already conducted a performance test to demonstrate initial compliance with the NSPS and the measured PM concentration is less than or equal to 0.020 gr/dscf corrected to 0 percent excess air. As part of the Notification of Compliance Status, you must certify that your vent meets the PM limit. You are not required to do another performance test to demonstrate initial compliance. As part of your Notification of Compliance Status, you certify that your PM CEMS meets the requirements in § 63.1572.
6. Option 1a: Elect NSPS subpart J requirements for PM per coke burn-off limit, not subject to the NSPS for PM in 40 CFR 60.102 or 60.102a(b)(1).	PM emissions must not exceed 1.0 gram per kilogram (g/kg) (1.0 lb/1,000 lb) of coke burn-off, and the opacity of emissions must not exceed 30 percent, except for one 6-minute average opacity reading in any 1-hour period. Before August 1, 2017, PM emission must not exceed 1.0 g/kg (1.0 lb/1,000 lb) of coke burn-off in the catalyst regenerator; if the discharged gases pass through an incinerator or waste heat boiler in which you burn auxiliary or supplemental liquid or solid fossil fuel, the incremental rate of PM must not exceed 43.0 g/GJ (0.10 lb/million Btu) of heat input attributable to the liquid or solid fossil fuel; and the opacity of emissions must not exceed 30 percent, except for one 6-minute average opacity reading in any 1-hour period.	The average PM emission rate, measured using EPA Method 5, 5B, or 5F (for a unit without a wet scrubber) or 5 or 5B (for a unit with a wet scrubber) (40 CFR part 60, appendix A–3), over the period of the initial performance test, is no higher than 1.0 g/kg coke burn-off (1.0 lb/1,000 lb) in the catalyst regenerator. The PM emission rate is calculated using Equations 1, 2, and 3 of § 63.1564. As part of the Notification of Compliance Status, you must certify that your vent meets the PM limit. The average hourly opacity is no more than 30 percent, except that one 6-minute average in any 1-hour period can exceed 30 percent. As part of the Notification of Compliance Status, you must certify that your vent meets the 30 percent opacity limit. If you use a continuous opacity monitoring system, your performance evaluation shows the system meets the applicable requirements in § 63.1572.

sfrattini on LAPJZKW1R2 with $$_JOB
VerDate Sep<11>2014 09:16 Apr 04, 2023 Jkt 256165 PO 00000 Frm 00181 Fmt 8010 Sfmt 8002 Q:\40\256165.XXX PC31

For each new and existing catalytic cracking unit catalyst regenerator vent . . .	For the following emission limit . . .	You have demonstrated initial compliance if . . .
7. Option 1b: Elect NSPS subpart Ja requirements for PM per coke burn-off limit, not subject to the NSPS for PM in 40 CFR 60.102 or 60.102a(b)(1).	PM emissions must not exceed 1.0 g/kg (1.0 lb/1,000 lb) of coke burn-off.	The average PM emission rate, measured using EPA Method 5, 5B, or 5F (for a unit without a wet scrubber) or 5 or 5B (for a unit with a wet scrubber) (40 CFR part 60, appendix A–3), over the period of the initial performance test, is no higher than 1.0 g/kg coke burn-off (1.0 lb/1,000 lb) in the catalyst regenerator. The PM emission rate is calculated using Equations 1, 2, and 3 of § 63.1564. If you use a BLD; CO_2, O_2, CO monitor; or continuous opacity monitoring system, your performance evaluation shows the system meets the applicable requirements in § 63.1572.
8. Option 1c: Elect NSPS subpart Ja requirements for PM concentration limit, not subject to the NSPS for PM in 40 CFR 60.102 or 60.102a(b)(1).	PM emissions must not exceed 0.040 gr/dscf corrected to 0 percent excess air.	The average PM concentration, measured using EPA Method 5, 5B, or 5F (for a unit without a wet scrubber) or Method 5 or 5B (for a unit with a wet scrubber) (40 CFR part 60, appendix A–3), over the period of the initial performance test, is less than or equal to 0.040 gr/dscf corrected to 0 percent excess air. Your performance evaluation shows your PM CEMS meets the applicable requirements in § 63.1572.
9. Option 2: PM per coke burn-off limit, not subject to the NSPS for PM in 40 CFR 60.102 or 60.102a(b)(1).	PM emissions must not exceed 1.0 g/kg (1.0 lb/1,000 lb) of coke burn-off.	The average PM emission rate, measured using EPA Method 5, 5B, or 5F (for a unit without a wet scrubber) or 5 or 5B (for a unit with a wet scrubber) (40 CFR part 60, appendix A–3), over the period of the initial performance test, is no higher than 1.0 g/kg coke burn-off (1.0 lb/1,000 lb) in the catalyst regenerator. The PM emission rate is calculated using Equations 1, 2, and 3 of § 63.1564. If you use a BLD; CO_2, O_2, CO monitor; or continuous opacity monitoring system, your performance evaluation shows the system meets the applicable requirements in § 63.1572.
10. Option 3: Ni lb/hr limit, not subject to the NSPS for PM in 40 CFR 60.102 or 60.102a(b)(1).	Nickel (Ni) emissions from your catalyst regenerator vent must not exceed 13,000 mg/hr (0.029 lb/hr).	The average Ni emission rate, measured using Method 29 (40 CFR part 60, appendix A–8) over the period of the initial performance test, is not more than 13,000 mg/hr (0.029 lb/hr). The Ni emission rate is calculated using Equation 5 of § 63.1564; and if you use a BLD; CO_2, O_2, or CO monitor; or continuous opacity monitoring system, your performance evaluation shows the system meets the applicable requirements in § 63.1572.
11. Option 4: Ni per coke burn-off limit not subject to the NSPS for PM.	Ni emissions from your catalyst regenerator vent must not exceed 1.0 mg/kg (0.001 lb/1,000 lb) of coke burn-off in the catalyst regenerator.	The average Ni emission rate, measured using Method 29 (40 CFR part 60, appendix A–8) over the period of the initial performance test, is not more than 1.0 mg/kg (0.001 lb/1,000 lb) of coke burn-off in the catalyst regenerator. The Ni emission rate is calculated using Equation 8 of § 63.1564; and if you use a BLD; CO_2, O_2, or CO monitor; or continuous opacity monitoring system, your performance evaluation shows the system meets the applicable requirements in § 63.1572.

[80 FR 75290, Dec. 1, 2015, as amended at 81 FR 45244, July 13, 2016; 83 FR 60726, Nov. 26, 2018]

TABLE 6 TO SUBPART UUU OF PART 63—CONTINUOUS COMPLIANCE WITH METAL HAP EMISSION LIMITS FOR CATALYTIC CRACKING UNITS

As stated in § 63.1564(c)(1), you shall meet each requirement in the following table that applies to you.

sfrattini on LAPJZKW1R2 with $$_JOB
VerDate Sep<11>2014 09:16 Apr 04, 2023 Jkt 256165 PO 00000 Frm 00182 Fmt 8010 Sfmt 8026 Q:\40\256165.XXX PC31

For each new and existing catalytic cracking unit . . .	Subject to this emission limit for your catalyst regenerator vent . . .	You shall demonstrate continuous compliance by . . .
1. Subject to the NSPS for PM in 40 CFR 60.102 and not electing § 60.100(e).	a. PM emissions must not exceed 1.0 g/kg (1.0 lb/1,000 lb) of coke burn-off, and the opacity of emissions must not exceed 30 percent, except for one 6-minute average opacity reading in any 1-hour period. Before August 1, 2017, if the discharged gases pass through an incinerator or waste heat boiler in which you burn auxiliary or supplemental liquid or solid fossil fuel, the incremental rate of PM must not exceed 43.0 g/GJ (0.10 lb/million Btu) of heat input attributable to the liquid or solid fossil fuel; and the opacity of emissions must not exceed 30 percent, except for one 6-minute average opacity reading in any 1-hour period.	i. Determining and recording each day the average coke burn-off rate (thousands of kilograms per hour) using Equation 1 in § 63.1564 and the hours of operation for each catalyst regenerator. ii. Conducting a performance test before August 1, 2017 or within 150 days of startup of a new unit and thereafter following the testing frequency in § 63.1571(a)(5) as applicable to your unit. iii. Collecting the continuous opacity monitoring data for each catalyst regenerator vent according to § 63.1572 and maintaining each 6-minute average at or below 30 percent, except that one 6-minute average during a 1-hour period can exceed 30 percent. iv. Before August 1, 2017, if applicable, determining and recording each day the rate of combustion of liquid or solid fossil fuels (liters/hour or kilograms/hour) and the hours of operation during which liquid or solid fossil-fuels are combusted in the incinerator-waste heat boiler; if applicable, maintaining the incremental rate of PM at or below 43 g/GJ (0.10 lb/million Btu) of heat input attributable to the solid or liquid fossil fuel.
2. Subject to NSPS for PM in 40 CFR 60.102a(b)(1)(i), electing to meet the PM per coke burn-off limit.	PM emissions must not exceed 1.0 g/kg (1.0 lb PM/1,000 lb) of coke burn-off.	Determining and recording each day the average coke burn-off rate (thousands of kilograms per hour) using Equation 1 in § 63.1564 and the hours of operation for each catalyst regenerator; maintaining PM emission rate below 1.0 g/kg (1.0 lb PM/1,000 lb) of coke burn-off; and conducting a performance test once every year.
3. Subject to NSPS for PM in 40 CFR 60.102a(b)(1)(ii), electing to meet the PM per coke burn-off limit.	PM emissions must not exceed 0.5 g/kg coke burn-off (0.5 lb/1000 lb coke burn-off).	Determining and recording each day the average coke burn-off rate (thousands of kilograms per hour) using Equation 1 in § 63.1564 and the hours of operation for each catalyst regenerator; maintaining PM emission rate below 0.5 g/kg (0.5 lb/1,000 lb) of coke burn-off; and conducting a performance test once every year.
4. Subject to NSPS for PM in 40 CFR 60.102a(b)(1)(i), electing to meet the PM concentration limit.	If a PM CEMS is used, 0.040 grain per dry standard cubic feet (gr/dscf) corrected to 0 percent excess air.	Maintaining PM concentration below 0.040 gr/dscf corrected to 0 percent excess air.
5. Subject to NSPS for PM in 40 CFR 60.102a(b)(1)(ii), electing to meet the PM concentration limit.	If a PM CEMS is used, 0.020 gr/dscf corrected to 0 percent excess air.	Maintaining PM concentration below 0.020 gr/dscf corrected to 0 percent excess air.
6. Option 1a: Elect NSPS subpart J requirements for PM per coke burn-off limit, not subject to the NSPS for PM in 40 CFR 60.102 or 60.102a(b)(1).	See item 1 of this table	See item 1 of this table.

sfrattini on LAPJZKW1R2 with $$_JOB
VerDate Sep<11>2014 09:16 Apr 04, 2023 Jkt 256165 PO 00000 Frm 00183 Fmt 8010 Sfmt 8002 Q:\40\256165.XXX PC31

For each new and existing catalytic cracking unit . . .	Subject to this emission limit for your catalyst regenerator vent . . .	You shall demonstrate continuous compliance by . . .
7. Option 1b: Elect NSPS subpart Ja requirements for PM per coke burn-off limit, not subject to the NSPS for PM in 40 CFR 60.102 or 60.102a(b)(1).	PM emissions must not exceed 1.0 g/kg (1.0 lb PM/1,000 lb) of coke burn-off.	See item 2 of this table.
8. Option 1c: Elect NSPS subpart Ja requirements for PM concentration limit, not subject to the NSPS for PM in 40 CFR 60.102 or 60.102a(b)(1).	PM emissions must not exceed 0.040 gr/dscf corrected to 0 percent excess air.	See item 4 of this table.
9. Option 2: PM per coke burn-off limit, not subject to the NSPS for PM in 40 CFR 60.102 or 60.102a(b)(1).	PM emissions must not exceed 1.0 g/kg (1.0 lb PM/1,000 lb) of coke burn-off.	Determining and recording each day the average coke burn-off rate and the hours of operation and the hours of operation for each catalyst regenerator by Equation 1 of § 63.1564 (you can use process data to determine the volumetric flow rate); maintaining PM emission rate below 1.0 g/kg (1.0 lb PM/1,000 lb) of coke burn-off; and conducting a performance test before August 1, 2017 and thereafter following the testing frequency in § 63.1571(a)(5) as applicable to your unit.
10. Option 3: Ni lb/hr limit, not subject to the NSPS for PM in 40 CFR 60.102 or 60.102a(b)(1).	Ni emissions must not exceed 13,000 mg/hr (0.029 lb/hr).	Maintaining Ni emission rate below 13,000 mg/hr (0.029 lb/hr); and conducting a performance test before August 1, 2017 and thereafter following the testing frequency in § 63.1571(a)(5) as applicable to your unit.
11. Option 4: Ni per coke burn-off limit, not subject to the NSPS for PM in 40 CFR 60.102 or 60.102a(b)(1).	Ni emissions must not exceed 1.0 mg/kg (0.001 lb/1,000 lb) of coke burn-off in the catalyst regenerator.	Determining and recording each day the average coke burn-off rate (thousands of kilograms per hour) and the hours of operation for each catalyst regenerator by Equation 1 of § 63.1564 (you can use process data to determine the volumetric flow rate); and maintaining Ni emission rate below 1.0 mg/kg (0.001 lb/1,000 lb) of coke burn-off in the catalyst regenerator; and conducting a performance test before August 1, 2017 and thereafter following the testing frequency in § 63.1571(a)(5) as applicable to your unit.

[80 FR 75292, Dec. 1, 2015, as amended at 83 FR 60726, Nov. 26, 2018]

Table 7 to Subpart UUU of Part 63—Continuous Compliance With Operating Limits for Metal HAP Emissions From Catalytic Cracking Units

As stated in § 63.1564(c)(1), you shall meet each requirement in the following table that applies to you.

For each new or existing catalytic cracking unit . . .	If you use . . .	For this operating limit . . .	You shall demonstrate continuous compliance by . . .
1. Subject to NSPS for PM in 40 CFR 60.102 and not electing § 60.100(e).	Continuous opacity monitoring system.	The 3-hour average opacity of emissions from your catalyst regenerator vent must not exceed 20 percent.	Collecting the continuous opacity monitoring data for each regenerator vent according to § 63.1572 and maintain each 3-hour rolling average opacity of emissions no higher than 20 percent.
2. Subject to NSPS for PM in 40 CFR 60.102a(b)(1); or 40 CFR 60.102 and elect § 60.100(e), electing to meet the PM per coke burn-off limit.	a. Continuous opacity monitoring system, used for site-specific opacity limit—Cyclone or electrostatic precipitator.	The average opacity must not exceed the opacity established during the performance test.	Collecting the hourly and 3-hr rolling average opacity monitoring data according to § 63.1572; maintaining the 3-hr rolling average opacity at or above the site-specific limit established during the performance test.

sfrattini on LAPJZKW1R2 with $$_JOB
VerDate Sep<11>2014 09:16 Apr 04, 2023 Jkt 256165 PO 00000 Frm 00184 Fmt 8010 Sfmt 8002 Q:\40\256165.XXX PC31

For each new or existing catalytic cracking unit . . .	If you use . . .	For this operating limit . . .	You shall demonstrate continuous compliance by . . .
	b. Continuous parametric monitoring systems—electrostatic precipitator.	i. The average gas flow rate entering or exiting the control device must not exceed the operating limit established during the performance test.	Collecting the hourly and daily average coke burn-off rate or average gas flow rate monitoring data according to § 63.1572; and maintaining the daily average coke burn-off rate or average gas flow rate at or below the limit established during the performance test.
		ii. The average total power and secondary current to the control device must not fall below the operating limit established during the performance test.	Collecting the hourly and 3-hr rolling average total power and secondary current monitoring data according to § 63.1572; and maintaining the 3-hr rolling average total power and secondary current at or above the limit established during the performance test.
	c. Continuous parametric monitoring systems—wet scrubber.	i. The average liquid-to-gas ratio must not fall below the operating limit established during the performance test.	Collecting the hourly and 3-hr rolling average gas flow rate and scrubber liquid flow rate monitoring data according to § 63.1572; determining and recording the 3-hr liquid-to-gas ratio; and maintaining the 3-hr rolling average liquid-to-gas ratio at or above the limit established during the performance test.
		ii. Except for periods of start-up, shutdown and hot standby, the average pressure drop across the scrubber must not fall below the operating limit established during the performance test.	Collecting the hourly and 3-hr rolling average pressure drop monitoring data according to § 63.1572; and except for periods of start-up, shutdown and hot standby, maintaining the 3-hr rolling average pressure drop at or above the limit established during the performance test.
	d. BLD—fabric filter	Increases in relative particulate.	Collecting and maintaining records of BLD system output; determining the cause of the alarm within 1 hour of the alarm; and alleviating the cause of the alarm within 3 hours by corrective action.
3. Subject to NSPS for PM in 40 CFR 60.102a(b)(1), electing to meet the PM concentration limit.	PM CEMS	Not applicable	Complying with Table 6 of this subpart, item 4 or 5.
4. Option 1a: Elect NSPS subpart J requirements for PM per coke burn-off limit, not subject to the NSPS for PM in 40 CFR 60.102 or 60.102a(b)(1).	Continuous opacity monitoring system.	The 3-hour average opacity of emissions from your catalyst regenerator vent must not exceed 20 percent.	Collecting the 3-hr rolling average continuous opacity monitoring system data according to § 63.1572; and maintaining the 3-hr rolling average opacity no higher than 20 percent.
5. Option 1b: Elect NSPS subpart Ja requirements for PM per coke burn-off limit, not subject to the NSPS for PM in 40 CFR 60.102 or 60.102a(b)(1).	a. Continuous opacity monitoring system.	The opacity of emissions from your catalyst regenerator vent must not exceed the site-specific opacity operating limit established during the performance test.	Collecting the 3-hr rolling average continuous opacity monitoring system data according to § 63.1572; maintaining the 3-hr rolling average opacity at or below the site-specific limit.
	b. Continuous parametric monitoring systems—electrostatic precipitator.	See item 2.b of this table	See item 2.b of this table.

sfrattini on LAPJZKW1R2 with $$_JOB
VerDate Sep<11>2014 09:16 Apr 04, 2023 Jkt 256165 PO 00000 Frm 00185 Fmt 8010 Sfmt 8002 Q:\40\256165.XXX PC31

For each new or existing catalytic cracking unit . . .	If you use . . .	For this operating limit . . .	You shall demonstrate continuous compliance by . . .
	c. Continuous parametric monitoring systems—wet scrubber.	See item 2.c of this table	See item 2.c of this table.
	d. BLD—fabric filter	See item 2.d of this table	See item 2.d of this table.
6. Option 1c: Elect NSPS subpart Ja requirements for PM concentration limit, not subject to the NSPS for PM in 40 CFR 60.102 or 60.102a(b)(1).	PM CEMS	Not applicable	Complying with Table 6 of this subpart, item 4.
7. Option 2: PM per coke burn-off limit, not subject to the NSPS for PM in 40 CFR 60.102 or 60.102a(b)(1).	a. Continuous opacity monitoring system.	The opacity of emissions from your catalyst regenerator vent must not exceed the site-specific opacity operating limit established during the performance test.	Collecting the hourly and 3-hr rolling average continuous opacity monitoring system data according to § 63.1572; and maintaining the 3-hr rolling average opacity at or below the site-specific limit established during the performance test. Alternatively, before August 1, 2017, collecting the hourly average continuous opacity monitoring system data according to § 63.1572; and maintaining the hourly average opacity at or below the site-specific limit.
	b. Continuous parameter monitoring systems—electrostatic precipitator.	i. The average coke burn-off rate or average gas flow rate entering or exiting the control device must not exceed the operating limit established during the performance test.	Collecting the hourly and daily average coke burn-off rate or gas flow rate monitoring data according to § 63.1572; and maintaining the daily coke burn-off rate or average gas flow rate at or below the limit established during the performance test.
		ii. The average total power (voltage and current) and secondary current to the control device must not fall below the operating limit established during the performance test.	Collecting the hourly and 3-hr rolling average total power and secondary current monitoring data according to § 63.1572; and maintaining the 3-hr rolling average total power and secondary current at or above the limit established during the performance test. Alternatively, before August 1, 2017, collecting the hourly and daily average voltage and secondary current (or total power input) monitoring data according to § 63.1572; and maintaining the daily average voltage and secondary current (or total power input) at or above the limit established during the performance test.

sfrattini on LAPJZKW1R2 with $$_JOB
VerDate Sep<11>2014 09:16 Apr 04, 2023 Jkt 256165 PO 00000 Frm 00186 Fmt 8010 Sfmt 8002 Q:\40\256165.XXX PC31

For each new or existing catalytic cracking unit . . .	If you use . . .	For this operating limit . . .	You shall demonstrate continuous compliance by . . .
	c. Continuous parameter monitoring systems—wet scrubber.	i. The average liquid-to-gas ratio must not fall below the operating limit established during the performance test.	Collecting the hourly and 3-hr rolling average gas flow rate and scrubber liquid flow rate monitoring data according to § 63.1572; determining and recording the 3-hr liquid-to-gas ratio; and maintaining the 3-hr rolling average liquid-to-gas ratio at or above the limit established during the performance test. Alternatively, before August 1, 2017, collecting the hourly average gas flow rate and water (or scrubbing liquid) flow rate monitoring data according to § 63.1572 [1]; determining and recording the hourly average liquid-to-gas ratio; determining and recording the daily average liquid-to-gas ratio; and maintaining the daily average liquid-to-gas ratio above the limit established during the performance test.
		ii. Except for periods of start-up, shutdown and hot standby, the average pressure drop across the scrubber must not fall below the operating limit established during the performance test.	Collecting the hourly and 3-hr rolling average pressure drop monitoring data according to § 63.1572; and except for periods of start-up, shutdown and hot standby, maintaining the 3-hr rolling average pressure drop at or above the limit established during the performance test. Alternatively, before August 1, 2017, collecting the hourly and daily average pressure drop monitoring data according to § 63.1572; and maintaining the daily average pressure drop above the limit established during the performance test.
	d. BLD—fabric filter	See item 2.d of this table	See item 2.d of this table.
8. Option 3: Ni lb/hr limit not subject to the NSPS for PM in 40 CFR 60.102.	a. Continuous opacity monitoring system.	i. The daily average Ni operating value must not exceed the site-specific Ni operating limit established during the performance test.	(1) Collecting the hourly average continuous opacity monitoring system data according to § 63.1572; determining and recording equilibrium catalyst Ni concentration at least once a week [2]; collecting the hourly average gas flow rate monitoring data according to § 63.1572 [1]; and determining and recording the hourly average Ni operating value using Equation 11 of § 63.1564.

sfrattini on LAPJZKW1R2 with $$_JOB
VerDate Sep<11>2014 09:16 Apr 04, 2023 Jkt 256165 PO 00000 Frm 00187 Fmt 8010 Sfmt 8002 Q:\40\256165.XXX PC31

For each new or existing catalytic cracking unit . . .	If you use . . .	For this operating limit . . .	You shall demonstrate continuous compliance by . . .
			(2) Determining and recording the 3-hour rolling average Ni operating value and maintaining the 3-hour rolling average Ni operating value below the site-specific Ni operating limit established during the performance test. Alternatively, before August 1, 2017, determining and recording the daily average Ni operating value and maintaining the daily average Ni operating value below the site-specific Ni operating limit established during the performance test.
	b. Continuous parameter monitoring systems—electrostatic precipitator.	i. The average gas flow rate entering or exiting the control device must not exceed the operating limit established during the performance test.	See item 7.b.i of this table.
		ii. The average total power (voltage and current) and secondary current must not fall below the level established in the performance test.	See item 7.b.ii of this table.
		iii. The monthly rolling average of the equilibrium catalyst Ni concentration must not exceed the level established during the performance test.	Determining and recording the equilibrium catalyst Ni concentration at least once a week[2]; determining and recording the monthly rolling average of the equilibrium catalyst Ni concentration once each week using the weekly or most recent value; and maintaining the monthly rolling average below the limit established in the performance test.
	c. Continuous parameter monitoring systems—wet scrubber.	i. The average liquid-to-gas ratio must not fall below the operating limit established during the performance test..	See item 7.c.i of this table.
		ii. Except for periods of start-up, shutdown and hot standby, the average pressure drop must not fall below the operating limit established in the performance test.	See item 7.c.ii of this table.
		iii. The monthly rolling average equilibrium catalyst Ni concentration must not exceed the level established during the performance test.	Determining and recording the equilibrium catalyst Ni concentration at least once a week[2]; determining and recording the monthly rolling average of equilibrium catalyst Ni concentration once each week using the weekly or most recent value; and maintaining the monthly rolling average below the limit established in the performance test.
	d. BLD—fabric filter	i. Increases in relative particulate.	See item 7.d of this table.

sfrattini on LAPJZKW1R2 with $$_JOB
VerDate Sep<11>2014 09:16 Apr 04, 2023 Jkt 256165 PO 00000 Frm 00188 Fmt 8010 Sfmt 8002 Q:\40\256165.XXX PC31

For each new or existing catalytic cracking unit . . .	If you use . . .	For this operating limit . . .	You shall demonstrate continuous compliance by . . .
		ii. The monthly rolling average of the equilibrium catalyst Ni concentration must not exceed the level established during the performance test.	Determining and recording the equilibrium catalyst Ni concentration at least once a week[2]; determining and recording the monthly rolling average of the equilibrium catalyst Ni concentration once each week using the weekly or most recent value; and maintaining the monthly rolling average below the limit established in the performance test.
9. Option 4: Ni per coke burn-off limit not subject to the NSPS for PM in 40 CFR 60.102.	a. Continuous opacity monitoring system.	i. The daily average Ni operating value must not exceed the site-specific Ni operating limit established during the performance test.	(1) Collecting the hourly average continuous opacity monitoring system data according to § 63.1572; collecting the hourly average coke burn rate and hourly average gas flow rate monitoring data according to § 63.15721; determining and recording equilibrium catalyst Ni concentration at least once a week[2]; and determining and recording the hourly average Ni operating value using Equation 12 of § 63.1564. (2) Determining and recording the 3-hour rolling average Ni operating value and maintaining the 3-hour rolling average Ni operating value below the site-specific Ni operating limit established during the performance test Alternatively, before August 1, 2017, determining and recording the daily average Ni operating value and maintaining the daily average Ni operating value below the site-specific Ni operating limit established during the performance test.
	b. Continuous parameter monitoring systems—electrostatic precipitator.	i. The average gas flow rate to the control device must not exceed the level established in the performance test.	See item 7.b.i of this table.
		ii. The average voltage and secondary current (or total power input) must not fall below the level established in the performance test.	See item 7.b.ii of this table.
		iii. The monthly rolling average equilibrium catalyst Ni concentration must not exceed the level established during the performance test.	See item 8.b.iii of this table.
	c. Continuous parameter monitoring systems—wet scrubber.	i. The average liquid-to-gas ratio must not fall below the operating limit established during the performance test.	See item 7.c.i of this table.

sfrattini on LAPJZKW1R2 with $$_JOB
VerDate Sep<11>2014 09:16 Apr 04, 2023 Jkt 256165 PO 00000 Frm 00189 Fmt 8010 Sfmt 8002 Q:\40\256165.XXX PC31

For each new or existing catalytic cracking unit . . .	If you use . . .	For this operating limit . . .	You shall demonstrate continuous compliance by . . .
		ii. Except for periods of startup, shutdown and hot standby, the daily average pressure drop must not fall below the operating limit established in the performance test.	See item 7.c.ii of this table.
		iii. The monthly rolling average equilibrium catalyst Ni concentration must not exceed the level established during the performance test.	See item 8.c.iii of this table.
	d. BLD—fabric filter	i. See item 2.d of this table	See item 2.d of this table.
		ii. The monthly rolling average of the equilibrium catalyst Ni concentration must not exceed the level established during the performance test.	Determining and recording the equilibrium catalyst Ni concentration at least once a week[2]; determining and recording the monthly rolling average of the equilibrium catalyst Ni concentration once each week using the weekly or most recent value; and maintaining the monthly rolling average below the limit established in the performance test.
10. During periods of startup, shutdown, or hot standby.	Any control device, if elected	The inlet velocity limit to the primary internal cyclones of the catalytic cracking unit catalyst regenerator in § 63.1564(a)(5)(ii).	Meeting the requirements in § 63.1564(c)(5).

[1] If applicable, you can use the alternative in § 63.1573(a)(1) for gas flow rate instead of a continuous parameter monitoring system if you used the alternative method in the initial performance test.

[2] The equilibrium catalyst Ni concentration must be measured by the procedure, Determination of Metal Concentration on Catalyst Particles (Instrumental Analyzer Procedure) in appendix A to this subpart; or by EPA Method 6010B, Inductively Coupled Plasma-Atomic Emission Spectrometry, EPA Method 6020, Inductively Coupled Plasma-Mass Spectrometry, EPA Method 7520, Nickel Atomic Absorption, Direct Aspiration, or EPA Method 7521, Nickel Atomic Absorption, Direct Aspiration; or by an alternative to EPA Method 6010B, 6020, 7520, or 7521 satisfactory to the Administrator. The EPA Methods 6010B, 6020, 7520, and 7521 are included in ''Test Methods for Evaluating Solid Waste, Physical/Chemical Methods,'' EPA Publication SW–846, Revision 5 (April 1998). The SW–846 and Updates (document number 955–001–00000–1) are available for purchase from the Superintendent of Documents, U.S. Government Publishing Office, Washington, DC 20402, (202) 512–1800; and from the National Technical Information Services (NTIS), 5285 Port Royal Road, Springfield, VA 22161, (703) 487–4650. Copies may be inspected at the EPA Docket Center, William Jefferson Clinton (WJC) West Building (Air Docket), Room 3334, 1301 Constitution Ave. NW., Washington, DC; or at the Office of the Federal Register, 800 North Capitol Street NW., Suite 700, Washington, DC. These methods are also available at *http://www.epa.gov/epaoswer/hazwaste/test/main.htm*.

[80 FR 75293, Dec. 1, 2015]

TABLE 8 TO SUBPART UUU OF PART 63—ORGANIC HAP EMISSION LIMITS FOR CATALYTIC CRACKING UNITS

As stated in § 63.1565(a)(1), you shall meet each emission limitation in the following table that applies to you.

For each new and existing catalytic cracking unit . . .	You shall meet the following emission limit for each catalyst regenerator vent . . .
1. Subject to the NSPS for carbon monoxide (CO) in 40 CFR 60.103 or 60.102a(b)(4).	CO emissions from the catalyst regenerator vent or CO boiler serving the catalytic cracking unit must not exceed 500 parts per million volume (ppmv) (dry basis).
2. Not subject to the NSPS for CO in 40 CFR 60.103 or 60.102a(b)(4).	a. CO emissions from the catalyst regenerator vent or CO boiler serving the catalytic cracking unit must not exceed 500 ppmv (dry basis). b. If you use a flare to meet the CO limit, then on and after January 30, 2019, the flare must meet the requirements of § 63.670. Prior to January 30, 2019, the flare must meet the requirements for control devices in § 63.11(b) and visible emissions must not exceed a total of 5 minutes during any 2 consecutive hours, or the flare must meet the requirements of § 63.670.

sfrattini on LAPJZKW1R2 with $$_JOB
VerDate Sep<11>2014 09:16 Apr 04, 2023 Jkt 256165 PO 00000 Frm 00190 Fmt 8010 Sfmt 8026 Q:\40\256165.XXX PC31

[80 FR 75299, Dec. 1, 2015]

TABLE 9 TO SUBPART UUU OF PART 63—OPERATING LIMITS FOR ORGANIC HAP EMISSIONS FROM CATALYTIC CRACKING UNITS

As stated in §63.1565(a)(2), you shall meet each operating limit in the following table that applies to you.

For each new or existing catalytic cracking unit . . .	For this type of continuous monitoring system . . .	For this type of control device . . .	You shall meet this operating limit . . .
1. Subject to the NSPS for carbon monoxide (CO) in 40 CFR 60.103 or 60.102a(b)(4).	Continuous emission monitoring system.	Not applicable	Not applicable.
2. Not subject to the NSPS for CO in 40 CFR 60.103 or 60.102a(b)(4).	a. Continuous emission monitoring system.	Not applicable	Not applicable.
	b. Continuous parameter monitoring systems.	i. Thermal incinerator	Maintain the daily average combustion zone temperature above the limit established during the performance test; and maintain the daily average oxygen concentration in the vent stream (percent, dry basis) above the limit established during the performance test.
		ii. Boiler or process heater with a design heat input capacity under 44 MW or a boiler or process heater in which all vent streams are not introduced into the flame zone.	Maintain the daily average combustion zone temperature above the limit established in the performance test.
		iii. Flare	On and after January 30, 2019, the flare must meet the requirements of §63.670. Prior to January 30, 2019, the flare pilot light must be present at all times and the flare must be operating at all times that emissions may be vented to it, or the flare must meet the requirements of §63.670.
3. During periods of startup, shutdown or hot standby.	Any	Any	Meet the requirements in §63.1565(a)(5).

[80 FR 75299, Dec. 1, 2015]

TABLE 10 TO SUBPART UUU OF PART 63—CONTINUOUS MONITORING SYSTEMS FOR ORGANIC HAP EMISSIONS FROM CATALYTIC CRACKING UNITS

As stated in §63.1565(b)(1), you shall meet each requirement in the following table that applies to you.

For each new or existing catalytic cracking unit . . .	And you use this type of control device for your vent . . .	You shall install, operate, and maintain this type of continuous monitoring system . . .
1. Subject to the NSPS for carbon monoxide (CO) in 40 CFR 60.103 or 60.102a(b)(4).	Not applicable	Continuous emission monitoring system to measure and record the concentration by volume (dry basis) of CO emissions from each catalyst regenerator vent.

sfrattini on LAPJZKW1R2 with $$_JOB
VerDate Sep<11>2014 09:16 Apr 04, 2023 Jkt 256165 PO 00000 Frm 00191 Fmt 8010 Sfmt 8002 Q:\40\256165.XXX PC31

For each new or existing catalytic cracking unit . . .	And you use this type of control device for your vent . . .	You shall install, operate, and maintain this type of continuous monitoring system . . .
2. Not subject to the NSPS for CO in 40 CFR 60.103 or 60.102a(b)(4).	a. Thermal incinerator	Continuous emission monitoring system to measure and record the concentration by volume (dry basis) of CO emissions from each catalyst regenerator vent; or continuous parameter monitoring systems to measure and record the combustion zone temperature and oxygen content (percent, dry basis) in the incinerator vent stream.
	b. Process heater or boiler with a design heat input capacity under 44 MW or process heater or boiler in which all vent streams are not introduced into the flame zone.	Continuous emission monitoring system to measure and record the concentration by volume (dry basis) of CO emissions from each catalyst regenerator vent; or continuous parameter monitoring systems to measure and record the combustion zone temperature.
	c. Flare	On and after January 30, 2019, the monitoring systems required in §§ 63.670 and 63.671. Prior to January 30, 2019, monitoring device such as a thermocouple, an ultraviolet beam sensor, or infrared sensor to continuously detect the presence of a pilot flame, or the monitoring systems required in §§ 63.670 and 63.671.
	d. No control device	Continuous emission monitoring system to measure and record the concentration by volume (dry basis) of CO emissions from each catalyst regenerator vent.
3. During periods of startup, shutdown or hot standby electing to comply with the operating limit in § 63.1565(a)(5)(ii).	Any	Continuous parameter monitoring system to measure and record the concentration by volume (wet or dry basis) of oxygen from each catalyst regenerator vent. If measurement is made on a wet basis, you must comply with the limit as measured (no moisture correction).

[80 FR 75300, Dec. 1, 2015, as amended at 83 FR 60727, Nov. 26, 2018]

TABLE 11 TO SUBPART UUU OF PART 63—REQUIREMENTS FOR PERFORMANCE TESTS FOR ORGANIC HAP EMISSIONS FROM CATALYTIC CRACKING UNITS NOT SUBJECT TO NEW SOURCE PERFORMANCE STANDARD (NSPS) FOR CARBON MONOXIDE (CO)

As stated in § 63.1565(b)(2) and (3), you shall meet each requirement in the following table that applies to you.

For . . .	You must . . .	Using . . .	According to these requirements . . .
1. Each new or existing catalytic cracking unit catalyst regenerator vent.	a. Select sampling port's location and the number of traverse ports.	Method 1 or 1A in appendix A to part 60 of this chapter.	Sampling sites must be located at the outlet of the control device or the outlet of the regenerator, as applicable, and prior to any releases to the atmosphere.
	b. Determine velocity and volumetric flow rate.	Method 2, 2A, 2D, 2F, or 2G in appendix A to part 60 of this chapter, as applicable.	
	c. Conduct gas molecular weight analysis.	Method 3, 3A, or 3B in appendix A to part 60 of this chapter, as applicable.	
	d. Measure moisture content of the stack gas.	Method 4 in appendix A to part 60 of this chapter.	

sfrattini on LAPJZKW1R2 with $$_JOB
VerDate Sep<11>2014 09:16 Apr 04, 2023 Jkt 256165 PO 00000 Frm 00192 Fmt 8010 Sfmt 8002 Q:\40\256165.XXX PC31

For . . .	You must . . .	Using . . .	According to these requirements . . .
2. For each new or existing catalytic cracking unit catalyst regenerator vent if you use a continuous emission monitoring system.	Measure CO emissions	Data from your continuous emission monitoring system.	Collect CO monitoring data for each vent for 24 consecutive operating hours; and reduce the continuous emission monitoring data to 1-hour averages computed from four or more data points equally spaced over each 1-hour period.
3. Each catalytic cracking unit catalyst regenerator vent if you use continuous parameter monitoring systems	a. Measure the CO concentration (dry basis) of emissions exiting the control device	Method 10, 10A, or 10B in appendix A–4 to part 60 of this chapter, as applicable	
	b. Establish each operating limit in Table 9 of this subpart that applies to you	Data from the continuous parameter monitoring systems	
	c. Thermal incinerator combustion zone temperature	Data from the continuous parameter monitoring systems	Collect temperature monitoring data every 15 minutes during the entire period of the CO initial performance test; and determine and record the minimum hourly average combustion zone temperature from all the readings.
	d. Thermal incinerator: oxygen, content (percent, dry basis) in the incinerator vent stream	Data from the continuous parameter monitoring systems.	Collect oxygen concentration (percent, dry basis) monitoring data every 15 minutes during the entire period of the CO initial performance test; and determine and record the minimum hourly average percent excess oxygen concentration from all the readings.
	e. If you use a process heater or boiler with a design heat input capacity under 44 MW or process heater or boiler in which all vent streams are not introduced into the flame zone, establish operating limit for combustion zone temperature	Data from the continuous parameter monitoring systems.	Collect the temperature monitoring data every 15 minutes during the entire period of the CO initial performance test; and determine and record the minimum hourly average combustion zone temperature from all the readings.
	f. If you use a flare, conduct visible emission observations	Method 22 (40 CFR part 60, appendix A–7).	On and after January 30, 2019, meet the requirements of § 63.670. Prior to January 30, 2019, maintain a 2-hour observation period; and record the presence of a flame at the pilot light over the full period of the test or meet the requirements of § 63.670.
	g. If you use a flare, determine that the flare meets the requirements for net heating value of the gas being combusted and exit velocity	40 CFR 63.11(b)(6) through (8)	On and after January 30, 2019, the flare must meet the requirements of § 63.670. Prior to January 30, 2019, the flare must meet the control device requirements in § 63.11(b) or the requirements of § 63.670.

[67 FR 17773, Apr. 11, 2002, as amended at 70 FR 6942, 6948, Feb. 9, 2005; 80 FR 75301, Dec. 1, 2015]

sfrattini on LAPJZKW1R2 with $$_JOB
VerDate Sep<11>2014 09:16 Apr 04, 2023 Jkt 256165 PO 00000 Frm 00193 Fmt 8010 Sfmt 8026 Q:\40\256165.XXX PC31

TABLE 12 TO SUBPART UUU OF PART 63—INITIAL COMPLIANCE WITH ORGANIC HAP EMISSION LIMITS FOR CATALYTIC CRACKING UNITS

As stated in §63.1565(b)(4), you shall meet each requirement in the following table that applies to you.

For each new and existing catalytic cracking unit . . .	For the following emission limit . . .	You have demonstrated initial compliance if . . .
1. Subject to the NSPS for carbon monoxide (CO) in 40 CFR 60.103, 60.100(e), or 60.102a(b)(4).	CO emissions from your catalyst regenerator vent or CO boiler serving the catalytic cracking unit must not exceed 500 ppmv (dry basis).	You have already conducted a performance test to demonstrate initial compliance with the NSPS and the measured CO emissions are less than or equal to 500 ppm (dry basis). As part of the Notification of Compliance Status, you must certify that your vent meets the CO limit. You are not required to conduct another performance test to demonstrate initial compliance. You have already conducted a performance evaluation to demonstrate initial compliance with the applicable performance specification. As part of your Notification of Compliance Status, you must certify that your continuous emission monitoring system meets the applicable requirements in §63.1572. You are not required to conduct another performance evaluation to demonstrate initial compliance.
2. Not subject to the NSPS for CO in 40 CFR 60.103 60.102a(b)(4).	a. CO emissions from your catalyst regenerator vent or CO boiler serving the catalytic cracking unit must not exceed 500 ppmv (dry basis).	i. If you use a continuous parameter monitoring system, the average CO emissions measured by Method 10 over the period of the initial performance test are less than or equal to 500 ppmv (dry basis).
		ii. If you use a continuous emission monitoring system, the hourly average CO emissions over the 24-hour period for the initial performance test are not more than 500 ppmv (dry basis); and your performance evaluation shows your continuous emission monitoring system meets the applicable requirements in §63.1572.
	b. If you use a flare, visible emissions must not exceed a total of 5 minutes during any 2 operating hours.	On and after January 30, 2019, the flare meets the requirements of §63.670. Prior to January 30, 2019, visible emissions, measured by Method 22 during the 2-hour observation period during the initial performance test, are no higher than 5 minutes, or the flare meets the requirements of §63.670.

[80 FR 75302, Dec. 1, 2015]

TABLE 13 TO SUBPART UUU OF PART 63—CONTINUOUS COMPLIANCE WITH ORGANIC HAP EMISSION LIMITS FOR CATALYTIC CRACKING UNITS

As stated in §63.1565(c)(1), you shall meet each requirement in the following table that applies to you.

For each new and existing catalytic cracking unit . . .	Subject to this emission limit for your catalyst regenerator vent . . .	If you must . . .	You shall demonstrate continuous compliance by . . .
1. Subject to the NSPS for carbon monoxide (CO) in 40 CFR 60.103, 60.100(e), or 60.102a(b)(4).	CO emissions from your catalyst regenerator vent or CO boiler serving the catalytic cracking unit must not exceed 500 ppmv (dry basis).	Continuous emission monitoring system.	Collecting the hourly average CO monitoring data according to §63.1572; and maintaining the hourly average CO concentration at or below 500 ppmv (dry basis).
2. Not subject to the NSPS for CO in 40 CFR 60.103 or 60.102a(b)(4).	a. CO emissions from your catalyst regenerator vent or CO boiler serving the catalytic cracking unit must not exceed 500 ppmv (dry basis).	Continuous emission monitoring system.	Same as item 1.
	b. CO emissions from your catalyst regenerator vent or CO boiler serving the catalytic cracking unit must not exceed 500 ppmv (dry basis).	Continuous parameter monitoring system.	Maintaining the hourly average CO concentration below 500 ppmv (dry basis).

sfrattini on LAPJZKW1R2 with $$_JOB
VerDate Sep<11>2014 09:16 Apr 04, 2023 Jkt 256165 PO 00000 Frm 00194 Fmt 8010 Sfmt 8002 Q:\40\256165.XXX PC31

For each new and existing catalytic cracking unit . . .	Subject to this emission limit for your catalyst regenerator vent . . .	If you must . . .	You shall demonstrate continuous compliance by . . .
	c. Visible emissions from a flare must not exceed a total of 5 minutes during any 2-hour period.	Control device-flare	On and after January 30, 2019, meeting the requirements of § 63.670. Prior to January 30, 2019, maintaining visible emissions below a total of 5 minutes during any 2-hour operating period, or meeting the requirements of § 63.670.

[80 FR 75302, Dec. 1, 2015]

Table 14 to Subpart UUU of Part 63—Continuous Compliance With Operating Limits for Organic HAP Emissions From Catalytic Cracking Units

As stated in § 63.1565(c)(1), you shall meet each requirement in the following table that applies to you.

For each new existing catalytic cracking unit . . .	If you use . . .	For this operating limit . . .	You shall demonstrate continuous compliance by . . .
1. Subject to NSPS for carbon monoxide (CO) in 40 CFR 60.103, 60.100(e), 60.102a(b)(4).	Continuous emission monitoring system.	Not applicable	Complying with Table 13 of this subpart, item 1.
2. Not subject to the NSPS for CO in 40 CFR 60.103 or 60.102a(b)(4).	a. Continuous emission monitoring system.	Not applicable	Complying with Table 13 of this subpart, item 2.a.
	b. Continuous parameter monitoring systems—thermal incinerator.	i. The daily average combustion zone temperature must not fall below the level established during the performance test.	Collecting the hourly and daily average temperature monitoring data according to § 63.1572; and maintaining the daily average combustion zone temperature above the limit established during the performance test.
		ii. The daily average oxygen concentration in the vent stream (percent, dry basis) must not fall below the level established during the performance test.	Collecting the hourly and daily average oxygen concentration monitoring data according to § 63.1572; and maintaining the daily average oxygen concentration above the limit established during the performance test.
	c. Continuous parameter monitoring systems—boiler or process heater with a design heat input capacity under 44 MW or boiler or process heater in which all vent streams are not introduced into the flame zone.	The daily combustion zone temperature must not fall below the level established in the performance test.	Collecting the average hourly and daily temperature monitoring data according to § 63.1572; and maintaining the daily average combustion zone temperature above the limit established during the performance test.
	d. Continuous parameter monitoring system—flare.	The flare pilot light must be present at all times and the flare must be operating at all times that emissions may be vented to it.	On and after January 30, 2019, meeting the requirements of § 63.670. Prior to January 30, 2019, collecting the flare monitoring data according to § 63.1572 and recording for each 1-hour period whether the monitor was continuously operating and the pilot light was continuously present during each 1-hour period, or meeting the requirements of § 63.670.

sfrattini on LAPJZKW1R2 with $$_JOB
VerDate Sep<11>2014 09:16 Apr 04, 2023 Jkt 256165 PO 00000 Frm 00195 Fmt 8010 Sfmt 8002 Q:\40\256165.XXX PC31

For each new existing catalytic cracking unit . . .	If you use . . .	For this operating limit . . .	You shall demonstrate continuous compliance by . . .
3. During periods of startup, shutdown or hot standby electing to comply with the operating limit in § 63.1565(a)(5)(ii).	Any control device	The oxygen concentration limit in § 63.1565(a)(5)(ii).	Collecting the hourly average oxygen concentration monitoring data according to § 63.1572 and maintaining the hourly average oxygen concentration at or above 1 volume percent (dry basis).

[80 FR 75303, Dec. 1, 2015]

TABLE 15 TO SUBPART UUU OF PART 63—ORGANIC HAP EMISSION LIMITS FOR CATALYTIC REFORMING UNITS

As stated in § 63.1566(a)(1), you shall meet each emission limitation in the following table that applies to you.

For each applicable process vent for a new or existing catalytic reforming unit . . .	You shall meet this emission limit during initial catalyst depressuring and catalyst purging operations . . .
1. Option 1	On and after January 30, 2019, vent emissions to a flare that meets the requirements of § 63.670. Prior to January 30, 2019, vent emissions to a flare that meets the requirements for control devices in § 63.11(b) and visible emissions from a flare must not exceed a total of 5 minutes during any 2-hour operating period, or vent emissions to a flare that meets the requirements of § 63.670.
2. Option 2	Reduce uncontrolled emissions of total organic compounds (TOC) or nonmethane TOC from your process vent by 98 percent by weight using a control device or to a concentration of 20 ppmv (dry basis as hexane), corrected to 3 percent oxygen, whichever is less stringent. If you vent emissions to a boiler or process heater to comply with the percent reduction or concentration emission limitation, the vent stream must be introduced into the flame zone, or any other location that will achieve the percent reduction or concentration standard.

[67 FR 17773, Apr. 11, 2002, as amended at 70 FR 6942, 6951, Feb. 9, 2005; 80 FR 75304, Dec. 1, 2015]

TABLE 16 TO SUBPART UUU OF PART 63—OPERATING LIMITS FOR ORGANIC HAP EMISSIONS FROM CATALYTIC REFORMING UNITS

As stated in § 63.1566(a)(2), you shall meet each operating limit in the following table that applies to you.

For each new or existing catalytic reforming unit . . .	For this type of control device . . .	You shall meet this operating limit during initial catalyst depressuring and purging operations. . .
1. Option 1: Vent to flare	Flare	On and after January 30, 2019, the flare must meet the requirements of § 63.670. Prior to January 30, 2019, the flare pilot light must be present at all times and the flare must be operating at all times that emissions may be vented to it, or the flare must meet the requirements of § 63.670.
2. Option 2: Percent reduction or concentration limit.	a. Thermal incinerator, boiler or process heater with a design heat input capacity under 44 MW, or boiler or process heater in which all vent streams are not introduced into the flame zone.	The daily average combustion zone temperature must not fall below the limit established during the performance test.
	b. No control device	Operate at all times according to your operation, maintenance, and monitoring plan regarding minimum catalyst purging conditions that must be met prior to allowing uncontrolled purge releases.

[67 FR 17773, Apr. 11, 2002, as amended at 70 FR 6942, 6951, Feb. 9, 2005; 80 FR 75304, Dec. 1, 2015]

sfrattini on LAPJZKW1R2 with $$_JOB
VerDate Sep<11>2014 09:16 Apr 04, 2023 Jkt 256165 PO 00000 Frm 00196 Fmt 8010 Sfmt 8026 Q:\40\256165.XXX PC31

TABLE 17 TO SUBPART UUU OF PART 63—CONTINUOUS MONITORING SYSTEMS FOR ORGANIC HAP EMISSIONS FROM CATALYTIC REFORMING UNITS

As stated in §63.1566(b)(1), you shall meet each requirement in the following table that applies to you.

For each applicable process vent for a new or existing catalytic reforming unit . . .	If you use this type of control device . . .	You shall install and operate this type of continuous monitoring system . . .
1. Option 1: Vent to a flare	Flare	On and after January 30, 2019, the monitoring systems required in §§63.670 and 63.671. Prior to January 30, 2019, monitoring device such as a thermocouple, an ultraviolet beam sensor, or infrared sensor to continuously detect the presence of a pilot flame, or the monitoring systems required in §§63.670 and 63.671.
2. Option 2: percent reduction or concentration limit.	Thermal incinerator, process heater or boiler with a design heat input capacity under 44 MW, or process heater or boiler in which all vent streams are not introduced into the flame zone.	Continuous parameter monitoring systems to measure and record the combustion zone temperature.

[67 FR 17773, Apr. 11, 2002, as amended at 70 FR 6942, 6952, Feb. 9, 2005; 80 FR 75304, Dec. 1, 2015]

TABLE 18 TO SUBPART UUU OF PART 63—REQUIREMENTS FOR PERFORMANCE TESTS FOR ORGANIC HAP EMISSIONS FROM CATALYTIC REFORMING UNITS

As stated in §63.1566(b)(2) and (3), you shall meet each requirement in the following table that applies to you.

For each new or existing catalytic reforming unit . . .	You must . . .	Using . . .	According to these requirements . . .
1. Option 1: Vent to a flare	a. Conduct visible emission observations.	Method 22 (40 CFR part 60, appendix A–7)	On and after January 30, 2019, the flare must meet the requirements of §63.670. Prior to January 30, 2019, 2-hour observation period. Record the presence of a flame at the pilot light over the full period of the test, or the requirements of §63.670.
	b. Determine that the flare meets the requirements for net heating value of the gas being combusted and exit velocity.	40 CFR 63.11(b)(6) through (8)	On and after January 30, 2019, the flare must meet the requirements of §63.670. Prior to January 30, 2019, the flare must meet the control device requirements in §63.11(b) or the requirements of §63.670.
2. Option 2: Percent reduction or concentration limit.	a. Select sampling site	Method 1 or 1A (40 CFR part 60, appendix A). No traverse site selection method is needed for vents smaller than 0.10 meter in diameter.	Sampling sites must be located at the inlet (if you elect the emission reduction standard) and outlet of the control device and prior to any releases to the atmosphere.
	b. Measure gas volumetric flow rate.	Method 2, 2A, 2C, 2D, 2F, or 2G (40 CFR part 60, appendix A), as applicable.	

sfrattini on LAPJZKW1R2 with $$_JOB
VerDate Sep<11>2014 09:16 Apr 04, 2023 Jkt 256165 PO 00000 Frm 00197 Fmt 8010 Sfmt 8002 Q:\40\256165.XXX PC31

For each new or existing catalytic reforming unit . . .	You must . . .	Using . . .	According to these requirements . . .
	c. Measure TOC concentration (for percent reduction standard).	Method 25 (40 part 60, appendix A) to measure nonmethane TOC concentration (in carbon equivalents) at inlet and outlet of the control device. If the nonmethane TOC outlet concentration is expected to be less than 50 ppm (as carbon), you can use Method 25A to measure TOC concentration (as hexane) at the inlet and the outlet of the control device. If you use Method 25A, you may use Method 18 (40 CFR part 60, appendix A) to measure the methane concentration to determine the nonmethane TOC concentration.	Take either an integrated sample or four grab samples during each run. If you use a grab sampling technique, take the samples at approximately equal intervals in time, such as 15-minute intervals during the run.
	d. Calculate TOC or nonmethane TOC emission rate and mass emission reduction.	.....	Calculate emission rate by Equation 1 of § 63.1566 (if you use Method 25) or Equation 2 of § 63.1566 (if you use Method 25A). Calculate mass emission reduction by Equation 3 of § 63.1566.
	e. For concentration standard, measure TOC concentration. (Optional: Measure methane concentration.)	Method 25A (40 CFR part 60, appendix A) to measure TOC concentration (as hexane) at the outlet of the control device. You may elect to use Method 18 (40 CFR part 60, appendix A) to measure the methane concentration.	
	f. Determine oxygen content in the gas stream at the outlet of the control device.	Method 3A or 3B (40 CFR part 60, appendix A), as applicable.	
	g. Calculate the TOC or nonmethane TOC concentration corrected for oxygen content (for concentration standard).	Equation 4 of § 63.1566.	
	h. Establish each operating limit in Table 16 of this subpart that applies to you for a thermal incinerator, or process heater or boiler with a design heat input capacity under 44 MW, or process heater or boiler in which all vent streams are not introduced into flame zone.	Data from the continuous parameter monitoring systems.	Collect the temperature monitoring data every 15 minutes during the entire period of the initial TOC performance test. Determine and record the minimum hourly average combustion zone temperature.
	i. If you do not use a control device, document the purging conditions used prior to testing following the minimum requirements in the operation, maintenance, and monitoring plan.	Data from monitoring systems as identified in the operation, maintenance, and monitoring plan.	Procedures in the operation, maintenance, and monitoring plan.

[67 FR 17773, Apr. 11, 2002, as amended at 70 FR 6942, 6952, Feb. 9, 2005; 80 FR 75305, Dec. 1, 2015]

sfrattini on LAPJZKW1R2 with $$_JOB
VerDate Sep<11>2014 09:16 Apr 04, 2023 Jkt 256165 PO 00000 Frm 00198 Fmt 8010 Sfmt 8026 Q:\40\256165.XXX PC31

TABLE 19 TO SUBPART UUU OF PART 63—INITIAL COMPLIANCE WITH ORGANIC HAP EMISSION LIMITS FOR CATALYTIC REFORMING UNITS

As stated in §63.1566(b)(7), you shall meet each requirement in the following table that applies to you.

For each applicable process vent for a new or existing catalytic reforming unit . . .	For the following emission limit . . .	You have demonstrated initial compliance if . . .
Option 1	Visible emissions from a flare must not exceed a total of 5 minutes during any 2 consecutive hours.	On and after January 30, 2019, the flare meets the requirements of §63.670. Prior to January 30, 2019, visible emissions, measured using Method 22 over the 2-hour observation period of the performance test, do not exceed a total of 5 minutes, or the flare meets the requirements of §63.670.
Option 2	Reduce uncontrolled emissions of total organic compounds (TOC) or nonmethane TOC from your process vent by 98 percent by weight using a control device or to a concentration of 20 ppmv (dry basis as hexane), corrected to 3 percent oxygen, whichever is less stringent.	The mass emission reduction of nonmethane TOC measured by Method 25 over the period of the performance test is at least 98 percent by weight as calculated using Equations 1 and 3 of §63.1566; or the mass emission reduction of TOC measured by Method 25A (or nonmethane TOC measured by Methods 25A and 18) over the period of the performance test is at least 98 percent by weight as calculated using Equations 2 and 3 of §63.1566; or the TOC concentration measured by Method 25A (or the nonmethane TOC concentration measured by Methods 25A and 18) over the period of the performance test does not exceed 20 ppmv (dry basis as hexane) corrected to 3 percent oxygen as calculated using Equation 4 of §63.1566.

[70 FR 6953, Feb. 9, 2005, as amended at 80 FR 75305, Dec. 1, 2015]

TABLE 20 TO SUBPART UUU OF PART 63—CONTINUOUS COMPLIANCE WITH ORGANIC HAP EMISSION LIMITS FOR CATALYTIC REFORMING UNITS

As stated in §63.1566(c)(1), you shall meet each requirement in the following table that applies to you.

For each applicable process vent for a new or existing catalytic reforming unit . . .	For this emission limit . . .	You shall demonstrate continuous compliance during initial catalyst depressuring and catalyst purging operations by . . .
1. Option 1	Vent emissions from your process vent to a flare	On and after January 30, 2019, meeting the requirements of §63.670. Prior to January 30, 2019, maintaining visible emissions from a flare below a total of 5 minutes during any 2 consecutive hours, or meeting the requirements of §63.670.
2. Option 2	Reduce uncontrolled emissions of total organic compounds (TOC) or nonmethane TOC from your process vent by 98 percent by weight using a control device or to a concentration of 20 ppmv (dry basis as hexane), corrected to 3 percent oxygen, whichever is less stringent.	Maintaining a 98 percent by weight emission reduction of TOC or nonmethane TOC; or maintaining a TOC or nonmethane TOC concentration of not more than 20 ppmv (dry basis as hexane), corrected to 3 percent oxygen, whichever is less stringent.

[70 FR 6954, Feb. 9, 2005, as amended at 80 FR 75305, Dec. 1, 2015]

TABLE 21 TO SUBPART UUU OF PART 63—CONTINUOUS COMPLIANCE WITH OPERATING LIMITS FOR ORGANIC HAP EMISSIONS FROM CATALYTIC REFORMING UNITS

As stated in §63.1566(c)(1), you shall meet each requirement in the following table that applies to you.

sfrattini on LAPJZKW1R2 with $$_JOB
VerDate Sep<11>2014 09:16 Apr 04, 2023 Jkt 256165 PO 00000 Frm 00199 Fmt 8010 Sfmt 8026 Q:\40\256165.XXX PC31

For each applicable process vent for a new or existing catalytic reforming unit . . .	If you use . . .	For this operating limit . . .	You shall demonstrate continuous compliance during initial catalyst depressuring and purging operations by . . .
1. Option 1	Flare	The flare pilot light must be present at all times and the flare must be operating at all times that emissions may be vented to it.	On and after January 30, 2019, meeting the requirements of § 63.670. Prior to January 30, 2019, collecting flare monitoring data according to § 63.1572 and recording for each 1-hour period whether the monitor was continuously operating and the pilot light was continuously present during each 1-hour period, or meeting the requirements of § 63.670.
2. Option 2	a. Thermal incinerator boiler or process heater with a design input capacity under 44 MW or boiler or process heater in which not all vent streams are not introduced into the flame zone.	Maintain the daily average combustion zone temperature above the limit established during the performance test.	Collecting, the hourly and daily temperature monitoring data according to § 63.1572; and maintaining the daily average combustion zone temperature above the limit established during the performance test.
	b. No control device	Operate at all times according to your operation, maintenance, and monitoring plan regarding minimum purging conditions that must be met prior to allowing uncontrolled purge releases.	Recording information to document compliance with the procedures in your operation, maintenance, and monitoring plan.

[70 FR 6954, Feb. 9, 2005, as amended at 80 FR 75306, Dec. 1, 2015]

TABLE 22 TO SUBPART UUU OF PART 63—INORGANIC HAP EMISSION LIMITS FOR CATALYTIC REFORMING UNITS

As stated in § 63.1567(a)(1), you shall meet each emission limitation in the following table that applies to you.

For . . .	You shall meet this emission limit for each applicable catalytic reforming unit process vent during coke burn-off and catalyst rejuvenation . . .
1. Each existing semi-regenerative catalytic reforming unit	Reduce uncontrolled emissions of hydrogen chloride (HCl) by 92 percent by weight or to a concentration of 30 ppmv (dry basis), corrected to 3 percent oxygen.
2. Each existing cyclic or continuous catalytic reforming unit	Reduce uncontrolled emissions of HCl by 97 percent by weight or to a concentration of 10 ppmv (dry basis), corrected to 3 percent oxygen.
3. Each new semi-regenerative, cyclic, or continuous catalytic reforming unit.	Reduce uncontrolled emissions of HCl by 97 percent by weight or to a concentration of 10 ppmv (dry basis), corrected to 3 percent oxygen.

[70 FR 6955, Feb. 9, 2005, as amended at 80 FR 75306, Dec. 1, 2015]

TABLE 23 TO SUBPART UUU OF PART 63—OPERATING LIMITS FOR INORGANIC HAP EMISSION LIMITATIONS FOR CATALYTIC REFORMING UNITS

As stated in § 63.1567(a)(2), you shall meet each operating limit in the following table that applies to you.

For each applicable process vent for a new or existing catalytic reforming unit with this type of control device . . .	You shall meet this operating limit during coke burn-off and catalyst rejuvenation . . .
1. Wet scrubber	The daily average pH or alkalinity of the water (or scrubbing liquid) exiting the scrubber must not fall below the limit established during the performance test; and the daily average liquid-to-gas ratio must not fall below the limit established during the performance test.
2. Internal scrubbing system or no control device (*e.g.*, hot regen system) meeting outlet HCl concentration limit.	The daily average HCl concentration in the catalyst regenerator exhaust gas must not exceed the limit established during the performance test.

sfrattini on LAPJZKW1R2 with $$_JOB
VerDate Sep<11>2014 09:16 Apr 04, 2023 Jkt 256165 PO 00000 Frm 00200 Fmt 8010 Sfmt 8002 Q:\40\256165.XXX PC31

For each applicable process vent for a new or existing catalytic reforming unit with this type of control device . . .	You shall meet this operating limit during coke burn-off and catalyst rejuvenation . . .
3. Internal scrubbing system meeting HCl percent reduction standard.	The daily average pH or alkalinity of the water (or scrubbing liquid) exiting the internal scrubbing system must not fall below the limit established during the performance test; and the daily average liquid-to-gas ratio must not fall below the limit established during the performance test.
4. Fixed-bed gas-solid adsorption system	The daily average temperature of the gas entering or exiting the adsorption system must not exceed the limit established during the performance test; and the HCl concentration in the adsorption system exhaust gas must not exceed the limit established during the performance test.
5. Moving-bed gas-solid adsorption system (*e.g.*, Chlorsorb™ System).	The daily average temperature of the gas entering or exiting the adsorption system must not exceed the limit established during the performance test; and the weekly average chloride level on the sorbent entering the adsorption system must not exceed the design or manufacturer's recommended limit (1.35 weight percent for the Chlorsorb™ System); and the weekly average chloride level on the sorbent leaving the adsorption system must not exceed the design or manufacturer's recommended limit (1.8 weight percent for the Chlorsorb™ System).

[70 FR 6955, Feb. 9, 2005]

Table 24 to Subpart UUU of Part 63—Continuous Monitoring Systems for Inorganic HAP Emissions From Catalytic Reforming Units

As stated in § 63.1567(b)(1), you shall meet each requirement in the following table that applies to you.

If you use this type of control device for your vent . . .	You shall install and operate this type of continuous monitoring system . . .
1. Wet scrubber	Continuous parameter monitoring system to measure and record the total water (or scrubbing liquid) flow rate entering the scrubber during coke burn-off and catalyst rejuvenation; and continuous parameter monitoring system to measure and record gas flow rate entering or exiting the scrubber during coke burn-off and catalyst rejuvenation [1]; and continuous parameter monitoring system to measure and record the pH or alkalinity of the water (or scrubbing liquid) exiting the scrubber during coke burn-off and catalyst rejuvenation. [2]
2. Internal scrubbing system or no control device (*e.g.,* hot regen system) to meet HCl outlet concentration limit.	Colormetric tube sampling system to measure the HCl concentration in the catalyst regenerator exhaust gas during coke burn-off and catalyst rejuvenation. The colormetric tube sampling system must meet the requirements in Table 41 of this subpart.
3. Internal scrubbing system to meet HCl percent reduction standard.	Continuous parameter monitoring system to measure and record the gas flow rate entering or exiting the internal scrubbing system during coke burn-off and catalyst rejuvenation; and continuous parameter monitoring system to measure and record the total water (or scrubbing liquid) flow rate entering the internal scrubbing system during coke burn-off and catalyst rejuvenation; and continuous parameter monitoring system to measure and record the pH or alkalinity of the water (or scrubbing liquid) exiting the internal scrubbing system during coke burn-off and catalyst rejuvenation.[2]
4. Fixed-bed gas-solid adsorption system	Continuous parameter monitoring system to measure and record the temperature of the gas entering or exiting the adsorption system during coke burn-off and catalyst rejuvenation; and colormetric tube sampling system to measure the gaseous HCl concentration in the adsorption system exhaust and at a point within the absorbent bed not to exceed 90 percent of the total length of the absorbent bed during coke burn-off and catalyst rejuvenation. The colormetric tube sampling system must meet the requirements in Table 41 of this subpart.
5. Moving-bed gas-solid adsorption system (e.g., Chlorsorb™ System)..	Continuous parameter monitoring system to measure and record the temperature of the gas entering or exiting the adsorption system during coke burn-off and catalyst rejuvenation.

[1] If applicable, you can use the alternative in § 63.1573 (a)(1) instead of a continuous parameter monitoring system for gas flow rate or instead of a continuous parameter monitoring system for the cumulative volume of gas.

sfrattini on LAPJZKW1R2 with $$_JOB
VerDate Sep<11>2014 09:16 Apr 04, 2023 Jkt 256165 PO 00000 Frm 00201 Fmt 8010 Sfmt 8002 Q:\40\256165.XXX PC31

[2] If applicable, you can use the alternative in § 63.1573(c)(1) instead of a continuous parameter monitoring system for pH of the water (or scrubbing liquid) or the alternative in § 63.1573(c)(2) instead of a continuous parameter monitoring system for alkalinity of the water (or scrubbing liquid).

[70 FR 6956, Feb. 9, 2005, as amended at 80 FR 75306, Dec. 1, 2015]

TABLE 25 TO SUBPART UUU OF PART 63—REQUIREMENTS FOR PERFORMANCE TESTS FOR INORGANIC HAP EMISSIONS FROM CATALYTIC REFORMING UNITS

As stated in § 63.1567(b)(2) and (3), you shall meet each requirement in the following table that applies to you.

For each new and existing catalytic reforming unit using . . .	You shall . . .	Using . . .	According to these requirements . . .
1. Any or no control system.	a. Select sampling port location(s) and the number of traverse points.	Method 1 or 1A (40 CFR part 60, appendix A), as applicable.	(1) If you operate a control device and you elect to meet an applicable HCl percent reduction standard, sampling sites must be located at the inlet of the control device or internal scrubbing system and at the outlet of the control device or internal scrubber system prior to any release to the atmosphere. For a series of fixed-bed systems, the outlet sampling site should be located at the outlet of the first fixed-bed, prior to entering the second fixed-bed in the series. (2) If you elect to meet an applicable HCl outlet concentration limit, locate sampling sites at the outlet of the control device or internal scrubber system prior to any release to the atmosphere. For a series of fixed-bed systems, the outlet sampling site should be located at the outlet of the first fixed-bed, prior to entering the second fixed-bed in the series. If there is no control device, locate sampling sites at the outlet of the catalyst regenerator prior to any release to the atmosphere.
	b. Determine velocity and volumetric flow rate.	Method 2, 2A, 2C, 2D, 2F, or 2G (40 CFR part 60, appendix A), as applicable..	
	c. Conduct gas molecular weight analysis.	Method 3, 3A, or 3B (40 CFR part 60, appendix A), as applicable.	
	d. Measure moisture content of the stack gas.	Method 4 (40 CFR part 60, appendix A).	
	e. Measure the HCl concentration at the selected sampling locations.	Method 26 or 26A (40 CFR part 60, appendix A). If your control device is a wet scrubber or internal scrubbing system, you must use Method 26A.	(1) For semi-regenerative and cyclic regeneration units, conduct the test during the coke burn-off and catalyst rejuvenation cycle, but collect no samples during the first hour or the last 6 hours of the cycle (for semi- regenerative units) or during the first hour or the last 2 hours of the cycle (for cyclic regeneration units). For continuous regeneration units, the test should be conducted no sooner than 3 days after process unit or control system start up. (2) Determine and record the HCl concentration corrected to 3 percent oxygen (using Equation 1 of § 63.1567) for each sampling location for each test run. (3) Determine and record the percent emission reduction, if applicable, using Equation 3 of § 63.1567 for each test run. (4) Determine and record the average HCl concentration (corrected to 3 percent oxygen) and the average percent emission reduction, if applicable, for the overall source test from the recorded test run values.

sfrattini on LAPJZKW1R2 with $$_JOB
VerDate Sep<11>2014 09:16 Apr 04, 2023 Jkt 256165 PO 00000 Frm 00202 Fmt 8010 Sfmt 8002 Q:\40\256165.XXX PC31

For each new and existing catalytic reforming unit using . . .	You shall . . .	Using . . .	According to these requirements . . .
2. Wet scrubber	a. Establish operating limit for pH level or alkalinity.	i. Data from continuous parameter monitoring systems.	Measure and record the pH or alkalinity of the water (or scrubbing liquid) exiting scrubber every 15 minutes during the entire period of the performance test. Determine and record the minimum hourly average pH or alkalinity level from the recorded values.
		ii. Alternative pH procedure in §63.1573(b)(1).	Measure and record the pH of the water (or scrubbing liquid) exiting the scrubber during coke burn-off and catalyst rejuvenation using pH strips at least three times during each test run. Determine and record the average pH level for each test run. Determine and record the minimum test run average pH level.
		iii. Alternative alkalinity method in §63.1573(c)(2).	Measure and record the alkalinity of the water (or scrubbing liquid) exiting the scrubber during coke burn-off and catalyst rejuvenation using discrete titration at least three times during each test run. Determine and record the average alkalinity level for each test run. Determine and record the minimum test run average alkalinity level.
	b. Establish operating limit for liquid-to-gas ratio.	i. Data from continuous parameter monitoring systems.	Measure and record the gas flow rate entering or exiting the scrubber and the total water (or scrubbing liquid) flow rate entering the scrubber every 15 minutes during the entire period of the performance test. Determine and record the hourly average gas flow rate and total water (or scrubbing liquid) flow rate. Determine and record the minimum liquid-to-gas ratio from the recorded, paired values.
		ii. Alternative procedure for gas flow rate in §63.1573(a)(1).	Collect air flow rate monitoring data or determine the air flow rate using control room instruments every 15 minutes during the entire period of the initial performance test. Determine and record the hourly average rate of all the readings. Determine and record the maximum gas flow rate using Equation 1 of §63.1573.
3. Internal scrubbing system or no control device (e.g., hot regen system) meeting HCl outlet concentration limit.	Establish operating limit for HCl concentration.	Data from continuous parameter monitoring system.	Measure and record the HCl concentration in the catalyst regenerator exhaust gas using the colormetric tube sampling system at least three times during each test run. Determine and record the average HCl concentration for each test run. Determine and record the average HCl concentration for the overall source test from the recorded test run averages. Determine and record the operating limit for HCl concentration using Equation 4 of §63.1567.
4. Internal scrubbing system meeting HCl percent reduction standard.	a. Establish operating limit for pH level or alkalinity.	i. Data from continuous parameter monitoring system.	Measure and record the pH alkalinity of the water (or scrubbing liquid) exiting the internal scrubbing system every 15 minutes during the entire period of the performance test. Determine and record the minimum hourly average pH or alkalinity level from the recorded values.
		ii. Alternative pH method in §63.1573(c)(1).	Measure and in record pH of the water (or scrubbing liquid) exiting the internal scrubbing system during coke burn-off and catalyst rejuvenation using pH strips at least three times during each test run. Determine and record the average pH level for each test run. Determine and record the minimum test run average pH level.
		iii. Alternative alkalinity method in §63.1573(c)(2).	Measure and record the alkalinity water (or scrubbing liquid) exiting the internal scrubbing system during coke burn-off and catalyst rejuvenation using discrete titration at least three times during each test run. Determine and record the average alkalinity level for each test run. Determine and record the minimum test run average alkalinity level.

sfrattini on LAPJZKW1R2 with $$_JOB
VerDate Sep<11>2014 09:16 Apr 04, 2023 Jkt 256165 PO 00000 Frm 00203 Fmt 8010 Sfmt 8002 Q:\40\256165.XXX PC31

For each new and existing catalytic reforming unit using . . .	You shall . . .	Using . . .	According to these requirements . . .
	b. Establish operating limit for liquid-to-gas ratio.	Data from continuous parameter monitoring systems.	Measure and record the gas entering or exiting the internal scrubbing system and the total water (or scrubbing liquid) flow rate entering the internal scrubbing system every 15 minutes during the entire period of the performance test. Determine and record the hourly average gas flow rate and total water (or scrubbing liquid) flow rate. Determine and record the minimum liquid-to-gas ratio from the recorded, paired values.
5. Fixed-bed gas-solid adsorption system. Gas-solid.	a. Establish operating limit for temperature.	Data from continuous parameter monitoring system.	Measure and record the temperature of gas entering or exiting the adsorption system every 15 minutes. Determine and record the maximum hourly average temperature.
	b. Establish operating limit for HCl concentration.	i. Data from continuous parameter monitoring systems.	(1) Measure and record the HCl concentration in the exhaust gas from the fixed-bed adsorption system using the colormetric tube sampling system at least three times during each test run. Determine and record the average HCl concentration for each test run. Determine and record the average HCl concentration for the overall source test from the recorded test run averages. (2) If you elect to comply with the HCl outlet concentration limit (Option 2), determine and record the operating limit for HCl concentration using Equation 4 of § 63.1567. If you elect to comply with the HCl percent reduction standard (Option 1), determine and record the operating limit for HCl concentration using Equation 5 of § 63.1567.
6. Moving-bed gas-solid adsorption system (e.g., Chlorsorb™ System).	a. Establish operating limit for temperature.	Data from continuous parameter monitoring systems.	Measure and record the temperature of gas entering or exiting the adsorption system every 15 minutes. Determine and record the maximum hourly average temperature.
	b. Measure the chloride level on the sorbent entering and exiting the adsorption system.	Determination of Metal Concentration on Catalyst Particles (Instrumental Analyzer Procedure) in appendix A to subpart UUU; or EPA Method 5050 combined either with EPA Method 9056, or with EPA Method 9253; or EPA Method 9212 with the soil extraction procedures listed within the method.[1]	Measure and record the chloride concentration of the sorbent material entering and exiting the adsorption system at least three times during each test run. Determine and record the average weight percent chloride concentration of the sorbent entering the adsorption system for each test run. Determine and record the average weight percent chloride concentration of the sorbent exiting the adsorption system for each test run.

[1] The EPA Methods 5050, 9056, 9212 and 9253 are included in ''Test Methods for Evaluating Solid Waste, Physical/Chemical Methods,'' EPA Publication SW–846, Revision 5 (April 1998). The SW–846 and Updates (document number 955–001–00000–1) are available for purchase from the Superintendent of Documents, U.S. Government Printing Office, Washington, DC 20402, (202) 512–1800; and from the National Technical Information Services (NTIS), 5285 Port Royal Road, Springfield, VA 22161, (703) 487–4650. Copies may be inspected at the EPA Docket Center, William Jefferson Clinton (WJC) West Building (Air Docket), Room 3334, 1301 Constitution Ave. NW., Washington, DC; or at the Office of the Federal Register, 800 North Capitol Street NW., Suite 700, Washington, DC. These methods are also available at *http://www.epa.gov/epaoswer/hazwaste/test/main.htm*.

[70 FR 6956, Feb. 9, 2005, as amended at 80 FR 75307, Dec. 1, 2015]

TABLE 26 TO SUBPART UUU OF PART 63—INITIAL COMPLIANCE WITH INORGANIC HAP EMISSION LIMITS FOR CATALYTIC REFORMING UNITS

As stated in § 63.1567(b)(4), you shall meet each requirement in the following table that applies to you.

sfrattini on LAPJZKW1R2 with $$_JOB
VerDate Sep<11>2014 09:16 Apr 04, 2023 Jkt 256165 PO 00000 Frm 00204 Fmt 8010 Sfmt 8026 Q:\40\256165.XXX PC31

For . . .	For the following emission limit . . .	You have demonstrated initial compliance if . . .
1. Each existing semi-regenerative catalytic reforming unit.	Reduce uncontrolled emissions of HCl by 92 percent by weight or to a concentration of 30 ppmv, (dry basis), corrected to 3 percent oxygen.	Average emissions HCl measured using Method 26 or 26A, as applicable, over the period of the performance test, are reduced by 92 percent or to a concentration less than or equal to 30 ppmv (dry basis) corrected to 3 percent oxygen.
2. Each existing cyclic or continuous catalytic reforming unit and each new semi-regenerative, cyclic, or continuous catalytic reforming unit.	Reduce uncontrolled emissions of HCl by 97 percent by weight or to a concentration of 10 ppmv (dry basis), corrected to 3 percent oxygen.	Average emissions of HCl measured using Method 26 or 26A, as applicable, over the period of the performance test, are reduced by 97 percent or to a concentration less than or equal to 10 ppmv (dry basis) corrected to 3 percent oxygen.

[70 FR 6959, Feb. 9, 2005]

TABLE 27 TO SUBPART UUU OF PART 63—CONTINUOUS COMPLIANCE WITH INORGANIC HAP EMISSION LIMITS FOR CATALYTIC REFORMING UNITS

As stated in §63.1567(c)(1), you shall meet each requirement in the following table that applies to you.

For . . .	For this emission limit . . .	You shall demonstrate continuous compliance during coke burn-off and catalyst rejuvenation by . . .
1. Each existing semi-regenerative catalytic reforming unit.	Reduce uncontrolled emissions of HCl by 92 percent by weight or to a concentration of 30 ppmv (dry basis), corrected to 3 percent oxygen..	Maintaining a 92 percent HCl emission reduction or an HCl concentration no more than 30 ppmv (dry basis), corrected to 3 percent oxygen.
2. Each existing cyclic or continuous catalytic reforming unit.	Reduce uncontrolled emissions of HCl by 97 percent by weight or to a concentration of 10 ppmv (dry basis), corrected to 3 percent oxygen.	Maintaining a 97 percent HCl control efficiency or an HCl concentration no more than 10 ppmv (dry basis), corrected to 3 percent oxygen.
3. Each new semi-regenerative, cyclic, or continuous catalytic reforming unit.	Reduce uncontrolled emissions of HCl by 97 percent by weight or to a concentration of 10 ppmv (dry basis), corrected to 3 percent oxygen.	Maintaining a 97 percent HCl control efficiency or an HCl concentration no more than 10 ppmv (dry basis), corrected to 3 percent oxygen.

[70 FR 6960, Feb. 9, 2005]

TABLE 28 TO SUBPART UUU OF PART 63—CONTINUOUS COMPLIANCE WITH OPERATING LIMITS FOR INORGANIC HAP EMISSIONS FROM CATALYTIC REFORMING UNITS

As stated in §63.1567(c)(1), you shall meet each requirement in the following table that applies to you.

For each new and existing catalytic reforming unit using this type of control device or system . . .	For this operating limit . . .	You shall demonstrate continuous compliance during coke burn-off and catalyst rejuvenation by . . .
1. Wet scrubber	a. The daily average pH or alkalinity of the water (or scrubbing liquid) exiting the scrubber must not fall below the level established during the performance test.	Collecting the hourly and daily average pH or alkalinity monitoring data according to §63.1572 [1]; and maintaining the daily average pH or alkalinity above the operating limit established during the performance test.
	b. The daily average liquid-to-gas ratio must not fall below the level established during the performance test.	Collecting the hourly average gas flow rate [2] and total water (or scrubbing liquid) flow rate monitoring data according to §63.1572; and determining and recording the hourly average liquid-to-gas ratio; and determining and recording the daily average liquid-to-gas ratio; and maintaining the daily average liquid-to-gas ratio above the limit established during the performance test.

sfrattini on LAPJZKW1R2 with $$_JOB
VerDate Sep<11>2014 09:16 Apr 04, 2023 Jkt 256165 PO 00000 Frm 00205 Fmt 8010 Sfmt 8002 Q:\40\256165.XXX PC31

For each new and existing catalytic reforming unit using this type of control device or system . . .	For this operating limit . . .	You shall demonstrate continuous compliance during coke burn-off and catalyst rejuvenation by . . .
2. Internal scrubbing system or no control device (e.g., hot regen system) meeting HCl concentration limit.	The daily average HCl concentration in the catalyst regenerator exhaust gas must not exceed the limit established during the performance test.	Measuring and recording the HCl concentration at least 4 times during a regeneration cycle (equally spaced in time) or every 4 hours, whichever is more frequent, using a colormetric tube sampling system; calculating the daily average HCl concentration as an arithmetic average of all samples collected in each 24-hour period from the start of the coke burn-off cycle or for the entire duration of the coke burn-off cycle if the coke burn-off cycle is less than 24 hours; and maintaining the daily average HCl concentration below the applicable operating limit.
3. Internal scrubbing system meeting percent HCl reduction standard.	a. The daily average pH or alkalinity of the water (or scrubbing liquid) exiting the internal scrubbing system must not fall below the limit established during the performance test.	Collecting the hourly and daily average pH or alkalinity monitoring data according to § 63.1572 [1] and maintaining the daily average pH or alkalinity above the operating limit established during the performance test.
	b. The daily average liquid-to-gas ratio must not fall below the level established during the performance test.	Collecting the hourly average gas flow rate [2] and total water (or scrubbing liquid) flow rate monitoring data according to § 63.1572; and determining and recording the hourly average liquid-to-gas ratio; and determining and recording the daily average liquid-to-gas ratio; and maintaining the daily average liquid-to-gas ratio above the limit established during the performance test.
4. Fixed-bed gas-solid adsorption systems.	a. The daily average temperature of the gas entering or exiting the adsorption system must not exceed the limit established during the performance test.	Collecting the hourly and daily average temperature monitoring data according to § 63.1572; and maintaining the daily average temperature below the operating limit established during the performance test.
	b. The HCl concentration in the exhaust gas from the fixed-bed gas-solid adsorption system must not exceed the limit established during the performance test.	Measuring and recording the concentration of HCl weekly or during each regeneration cycle, whichever is less frequent, using a colormetric tube sampling system at a point within the adsorbent bed not to exceed 90 percent of the total length of the adsorption bed during coke-burn-off and catalyst rejuvenation; implementing procedures in the operating and maintenance plan if the HCl concentration at the sampling location within the adsorption bed exceeds the operating limit; and maintaining the HCl concentration in the gas from the adsorption system below the applicable operating limit.
5. Moving-bed gas-solid adsorption system (*e.g.,* Chlorsorb™ System).	a. The daily average temperature of the gas entering or exiting the adsorption system must not exceed the limit established during the performance test.	Collecting the hourly and daily average temperature monitoring data according to § 63.1572; and maintaining the daily average temperature below the operating limit established during the performance test.
	b. The weekly average chloride level on the sorbent entering the adsorption system must not exceed the design or manufacturer's recommended limit (1.35 weight percent for the Chlorsorb™ System).	Collecting samples of the sorbent exiting the adsorption system three times per week (on non-consecutive days); and analyzing the samples for total chloride[3]; and determining and recording the weekly average chloride concentration; and maintaining the chloride concentration below the design or manufacturer's recommended limit (1.35 weight percent for the Chlorsorb™ System).

sfrattini on LAPJZKW1R2 with $$_JOB
VerDate Sep<11>2014 09:16 Apr 04, 2023 Jkt 256165 PO 00000 Frm 00206 Fmt 8010 Sfmt 8002 Q:\40\256165.XXX PC31

For each new and existing catalytic reforming unit using this type of control device or system . . .	For this operating limit . . .	You shall demonstrate continuous compliance during coke burn-off and catalyst rejuvenation by . . .
	c. The weekly average chloride level on the sorbent exiting the adsorption system must not exceed the design or manufacturer's recommended limit (1.8 weight percent for the Chlorsorb™ System).	Collecting samples of the sorbent exiting the adsorption system three times per week (on non-consecutive days); and analyzing the samples for total chloride concentration; and determining and recording the weekly average chloride concentration; and maintaining the chloride concentration below the design or manufacturer's recommended limit (1.8 weight percent Chlorsorb™ System).

[1] If applicable, you can use either alternative in § 63.1573(c) instead of a continuous parameter monitoring system for pH or alkalinity if you used the alternative method in the initial performance test.

[2] If applicable, you can use the alternative in § 63.1573(a)(1) instead of a continuous parameter monitoring system for the gas flow rate or cumulative volume of gas entering or exiting the system if you used the alternative method in the initial performance test.

[3] The total chloride concentration of the sorbent material must be measured by the procedure, ''Determination of Metal Concentration on Catalyst Particles (Instrumental Analyzer Procedure)'' in appendix A to this subpart; or by using EPA Method 5050, Bomb Preparation Method for Solid Waste, combined either with EPA Method 9056, Determination of Inorganic Anions by Ion Chromatography, or with EPA Method 9253, Chloride (Titrimetric, Silver Nitrate); or by using EPA Method 9212, Potentiometric Determination of Chloride in Aqueous Samples with Ion-Selective Electrode, and using the soil extraction procedures listed within the method. The EPA Methods 5050, 9056, 9212 and 9253 are included in ''Test Methods for Evaluating Solid Waste, Physical/Chemical Methods,'' EPA Publication SW–846, Revision 5 (April 1998). The SW–846 and Updates (document number 955–001–00000–1) are available for purchase from the Superintendent of Documents, U.S. Government Printing Office, Washington, DC 20402, (202) 512–1800; and from the National Technical Information Services (NTIS), 5285 Port Royal Road, Springfield, VA 22161, (703) 487–4650. Copies may be inspected at the EPA Docket Center, William Jefferson Clinton (WJC) West Building, (Air Docket), Room 3334, 1301 Constitution Ave. NW., Washington, DC; or at the Office of the Federal Register, 800 North Capitol Street NW., Suite 700, Washington, DC. These methods are also available at *http://www.epa.gov/epaoswer/hazwaste/test/main.htm*.

[70 FR 6954, Feb. 9, 2005, as amended at 80 FR 75308, Dec. 1, 2015]

TABLE 29 TO SUBPART UUU OF PART 63—HAP EMISSION LIMITS FOR SULFUR RECOVERY UNITS

As stated in § 63.1568(a)(1), you shall meet each emission limitation in the following table that applies to you.

For . . .	You shall meet this emission limit for each process vent . . .
1. Subject to NSPS. Each new or existing Claus sulfur recovery unit part of a sulfur recovery plant with design capacity greater than 20 long tons per day (LTD) and subject to the NSPS for sulfur oxides in 40 CFR 60.104(a)(2) or 60.102a(f)(1).	a. 250 ppmv (dry basis) of sulfur dioxide (SO_2) at zero percent excess air, or concentration determined using Equation 1 of 40 CFR 60.102a(f)(1)(i), if you use an oxidation control system or if you use a reduction control system followed by incineration.
	b. 300 ppmv of reduced sulfur compounds calculated as ppmv SO_2 (dry basis) at zero percent excess air, or concentration determined using Equation 1 of 40 CFR 60.102a(f)(1)(i), if you use a reduction control system without incineration.
2. Option 1: Elect NSPS. Each new or existing sulfur recovery unit (Claus or other type, regardless of size) not subject to the NSPS for sulfur oxides in 40 CFR 60.104(a)(2) or 60.102a(f)(1).	a. 250 ppmv (dry basis) of SO_2 at zero percent excess air, or concentration determined using Equation 1 of 40 CFR 60.102a(f)(1)(i), if you use an oxidation control system or if you use a reduction control system followed by incineration.
	b. 300 ppmv of reduced sulfur compounds calculated as ppmv SO_2 (dry basis) at zero percent excess air, or concentration determined using Equation 1 of 40 CFR 60.102a(f)(1)(i), if you use a reduction control system without incineration.
3. Option 2: TRS limit. Each new or existing sulfur recovery unit (Claus or other type, regardless of size) not subject to the NSPS for sulfur oxides in 40 CFR 60.104(a)(2) or 60.102a(f)(1).	300 ppmv of total reduced sulfur (TRS) compounds, expressed as an equivalent SO_2 concentration (dry basis) at zero percent oxygen.

[80 FR 75309, Dec. 1, 2015]

TABLE 30 TO SUBPART UUU OF PART 63—OPERATING LIMITS FOR HAP EMISSIONS FROM SULFUR RECOVERY UNITS

As stated in § 63.1568(a)(2), you shall meet each operating limit in the following table that applies to you.

sfrattini on LAPJZKW1R2 with $$_JOB
VerDate Sep<11>2014 09:16 Apr 04, 2023 Jkt 256165 PO 00000 Frm 00207 Fmt 8010 Sfmt 8026 Q:\40\256165.XXX PC31

For . . .	If use this type of control device . . .	You shall meet this operating limit . . .
1. Subject to NSPS. Each new or existing Claus sulfur recovery unit part of a sulfur recovery plant with design capacity greater than 20 LTD and subject to the NSPS for sulfur oxides in 40 CFR 60.104(a)(2) or 60.102a(f)(1).	Not applicable	Not applicable.
2. Option 1: Elect NSPS. Each new or existing sulfur recovery unit (Claus or other type, regardless of size) not subject to the NSPS for sulfur oxides in 40 CFR 60.104(a)(2) or 60.102a(f)(1).	Not applicable	Not applicable.
3. Option 2: TRS limit, if using continuous emissions monitoring systems. Each new or existing sulfur recovery unit (Claus or other type, regardless of size) not subject to the NSPS for sulfur oxides in 40 CFR 60.104(a)(2) or 60.102a(f)(1).	Not applicable	Not applicable.
4. Option 2: TRS limit, if using continuous parameter monitoring systems. Each new or existing sulfur recovery unit (Claus or other type, regardless of size) not subject to the NSPS for sulfur oxides in 40 CFR 60.104(a)(2) or 60.102a(f)(1).	Thermal incinerator	Maintain the daily average combustion zone temperature above the limit established during the performance test; and maintain the daily average oxygen concentration in the vent stream (percent, dry basis) above the limit established during the performance test.
5. Startup or shutdown option 1: Electing to comply with § 63.1568(a)(4)(ii). Each new or existing sulfur recovery unit (Claus or other type, regardless of size) during periods of startup or shutdown.	Flare	On and after January 30, 2019, meet the applicable requirements of § 63.670. Prior to January 30, 2019, meet the applicable requirements of either § 63.11(b) or § 63.670.
6. Startup or shutdown option 2: Electing to comply with § 63.1568(a)(4)(iii). Each new or existing sulfur recovery unit (Claus or other type, regardless of size) during startup or shutdown events.	Thermal incinerator or thermal oxidizer	Maintain the hourly average combustion zone temperature at or above 1,200 degrees Fahrenheit and maintain the hourly average oxygen concentration in the exhaust gas stream at or above 2 volume percent (dry basis).

[80 FR 75310, Dec. 1, 2015]

Table 31 to Subpart UUU of Part 63—Continuous Monitoring Systems for HAP Emissions From Sulfur Recovery Units

As stated in § 63.1568(b)(1), you shall meet each requirement in the following table that applies to you.

For . . .	For this limit . . .	You shall install and operate this continuous monitoring system . . .
1. Subject to NSPS. Each new or existing Claus sulfur recovery unit part of a sulfur recovery plant with design capacity greater than 20 LTD and subject to the NSPS for sulfur oxides in 40 CFR 60.104(a)(2) or 60.102a(f)(1).	a. 250 ppmv (dry basis) of SO_2 at zero percent excess air if you use an oxidation or reduction control system followed by incineration.	Continuous emission monitoring system to measure and record the hourly average concentration of SO_2 (dry basis) at zero percent excess air for each exhaust stack. This system must include an oxygen monitor for correcting the data for excess air.
	b. 300 ppmv of reduced sulfur compounds calculated as ppmv SO_2 (dry basis) at zero percent excess air if you use a reduction control system without incineration.	Continuous emission monitoring system to measure and record the hourly average concentration of reduced sulfur and oxygen (O_2) emissions. Calculate the reduced sulfur emissions as SO_2 (dry basis) at zero percent excess air. *Exception:* You can use an instrument having an air or SO_2 dilution and oxidation system to convert the reduced sulfur to SO_2 for continuously monitoring and recording the concentration (dry basis) at zero percent excess air of the resultant SO_2 instead of the reduced sulfur monitor. The monitor must include an oxygen monitor for correcting the data for excess oxygen.

sfrattini on LAPJZKW1R2 with $$_JOB
VerDate Sep<11>2014 09:16 Apr 04, 2023 Jkt 256165 PO 00000 Frm 00208 Fmt 8010 Sfmt 8002 Q:\40\256165.XXX PC31

For . . .	For this limit . . .	You shall install and operate this continuous monitoring system . . .
	c. If you use Equation 1 of 40 CFR 60.102a(f)(1)(i) to set your emission limit.	i. Complete either item 1.a or item 1.b; and ii. Either a continuous emission monitoring system to measure and record the O_2 concentration for the inlet air/oxygen supplied to the system or a continuous parameter monitoring system to measure and record the volumetric gas flow rate of ambient air and purchased oxygen-enriched gas.
2. Option 1: Elect NSPS. Each new or existing sulfur recovery unit (Claus or other type, regardless of size) not subject to the NSPS for sulfur oxides in 40 CFR 60.104(a)(2) or 60.102a(f)(1).	a. 250 ppmv (dry basis) of SO_2 at zero percent excess air if you use an oxidation or reduction control system followed by incineration.	Continuous emission monitoring system to measure and record the hourly average concentration of SO_2 (dry basis), at zero percent excess air for each exhaust stack. This system must include an oxygen monitor for correcting the data for excess air.
	b. 300 ppmv of reduced sulfur compounds calculated as ppmv SO_2 (dry basis) at zero percent excess air if you use a reduction control system without incineration.	Continuous emission monitoring system to measure and record the hourly average concentration of reduced sulfur and O_2 emissions for each exhaust stack. Calculate the reduced sulfur emissions as SO_2 (dry basis), at zero percent excess air. *Exception:* You can use an instrument having an air or O_2 dilution and oxidation system to convert the reduced sulfur to SO_2 for continuously monitoring and recording the concentration (dry basis) at zero percent excess air of the resultant SO_2 instead of the reduced sulfur monitor. The monitor must include an oxygen monitor for correcting the data for excess oxygen.
	c. If you use Equation 1 of 40 CFR 60.102a(f)(1)(i) to set your emission limit.	i. Complete either item 2.a or item 2.b; and ii. Either a continuous emission monitoring system to measure and record the O_2 concentration for the inlet air/oxygen supplied to the system, or a continuous parameter monitoring system to measure and record the volumetric gas flow rate of ambient air and purchased oxygen-enriched gas.
3. Option 2: TRS limit. Each new or existing sulfur recovery unit (Claus or other type, regardless of size) not subject to the NSPS for sulfur oxides in 40 CFR 60.104(a)(2) or 60.102a(f)(1).	a. 300 ppmv of total reduced sulfur (TRS) compounds, expressed as an equivalent SO_2 concentration (dry basis) at zero percent oxygen.	i. Continuous emission monitoring system to measure and record the hourly average concentration of TRS for each exhaust stack; this monitor must include an oxygen monitor for correcting the data for excess oxygen; or ii. Continuous parameter monitoring systems to measure and record the combustion zone temperature of each thermal incinerator and the oxygen content (percent, dry basis) in the vent stream of the incinerator.
4. Startup or shutdown option 1: electing to comply with § 63.1568(a)(4)(ii). Each new or existing sulfur recovery unit (Claus or other type, regardless of size) during periods of startup or shutdown.	Any	On and after January 30, 2019, monitoring systems as specified in §§ 63.670 and 63.671. Prior to January 30, 2019, either continuous parameter monitoring systems following the requirements in § 63.11 (to detect the presence of a flame; to measure and record the net heating value of the gas being combusted; and to measure and record the volumetric flow of the gas being combusted) or monitoring systems as specified in §§ 63.670 and 63.671.

sfrattini on LAPJZKW1R2 with $$_JOB
VerDate Sep<11>2014 09:16 Apr 04, 2023 Jkt 256165 PO 00000 Frm 00209 Fmt 8010 Sfmt 8002 Q:\40\256165.XXX PC31

For . . .	For this limit . . .	You shall install and operate this continuous monitoring system . . .
5. Startup or shutdown option 2: electing to comply with § 63.1568(a)(4)(iii). Each new or existing sulfur recovery unit (Claus or other type, regardless of size) during periods of startup or shutdown.	Any	Continuous parameter monitoring systems to measure and record the firebox temperature of each thermal incinerator or oxidizer and the oxygen content (percent, dry basis) in the exhaust vent from the incinerator or oxidizer.

[80 FR 75310, Dec. 1, 2015]

TABLE 32 TO SUBPART UUU OF PART 63—REQUIREMENTS FOR PERFORMANCE TESTS FOR HAP EMISSIONS FROM SULFUR RECOVERY UNITS NOT SUBJECT TO THE NEW SOURCE PERFORMANCE STANDARDS FOR SULFUR OXIDES

As stated in § 63.1568(b)(2) and (3), you shall meet each requirement in the following table that applies to you.

For . . .	You must . . .	Using . . .	According to these requirements . . .
1. Option 1: Elect NSPS. Each new and existing sulfur recovery unit.	a. Measure SO_2 concentration (for an oxidation or reduction system followed by incineration) or measure the concentration of reduced sulfur (or SO_2 if you use an instrument to convert the reduced sulfur to SO_2) for a reduction control system without incineration.	Data from continuous emission monitoring system.	Collect SO_2 monitoring data every 15 minutes for 24 consecutive operating hours. Reduce the data to 1-hour averages computed from four or more data points equally spaced over each 1-hour period.
	b. Measure O_2 concentration for the inlet air/oxygen supplied to the system, if using Equation 1 of 40 CFR 60.102a(f)1)(i) to set your emission limit. You may use either an O_2 CEMS method in item 1.b.i of this table or the flow monitor in item 1.b.ii of this table.	i. Data from continuous emission monitoring system; or	Collect O_2 monitoring data every 15 minutes for 24 consecutive operating hours. Reduce the data to 1-hour averages computed from four or more data points equally spaced over each 1-hour period; and average over the 24-hour period for input to Equation 1 of 40 CFR 60.102a(f)(1)(i).
		ii. Data from flow monitor for ambient air and purchased oxygen-enriched gas.	Collect gas flow rate monitoring data every 15 minutes for 24 consecutive operating hours. Reduce the data to 1-hour averages computed from 4 or more data points equally spaced over each 1-hour period; calculate the hourly O_2 percent using Equation 10 of 40 CFR 60.106a(a)(6)(iv); and average over the 24-hour period for input to Equation 1 of 40 CFR 60.102a(f)(1)(i).
2. Option 2: TRS limit, using CEMS. Each new and existing sulfur recovery unit.	Measure the concentration of reduced sulfur (or SO_2 if you use an instrument to convert the reduced sulfur to SO_2).	Data from continuous emission monitoring system.	Collect TRS data every 15 minutes for 24 consecutive operating hours. Reduce the data to 1-hour averages computed from four or more data points equally spaced over each 1-hour period.
3. Option 2: TRS limit, if using continuous parameter monitoring systems. Each new and existing sulfur recovery unit.	a. Select sampling port's location and the number of traverse ports.	Method 1 or 1A in Appendix A–1 to part 60 of this chapter.	Sampling sites must be located at the outlet of the control device and prior to any releases to the atmosphere.

sfrattini on LAPJZKW1R2 with $$_JOB
VerDate Sep<11>2014 09:16 Apr 04, 2023 Jkt 256165 PO 00000 Frm 00210 Fmt 8010 Sfmt 8002 Q:\40\256165.XXX PC31

For . . .	You must . . .	Using . . .	According to these requirements . . .
	b. Determine velocity and volumetric flow rate.	Method 2, 2A, 2C, 2D, or 2F in appendix A–1 to part 60 of this chapter, or Method 2G in appendix A–2 to part 60 of this chapter, as applicable.	
	c. Conduct gas molecular weight analysis; obtain the oxygen concentration needed to correct the emission rate for excess air.	Method 3, 3A, or 3B in appendix A–2 to part 60 of this chapter, as applicable.	Take the samples simultaneously with reduced sulfur or moisture samples.
	d. Measure moisture content of the stack gas.	Method 4 in appendix A–3 to part 60 of this chapter.	Make your sampling time for each Method 4 sample equal to that for 4 Method 15 samples.
	e. Measure the concentration of TRS.	Method 15 or 15A in appendix A–5 to part 60 of this chapter, as applicable.	If the cross-sectional area of the duct is less than 5 square meters (m^2) or 54 square feet, you must use the centroid of the cross section as the sampling point. If the cross-sectional area is 5 m^2 or more and the centroid is more than 1 meter (m) from the wall, your sampling point may be at a point no closer to the walls than 1 m or 39 inches. Your sampling rate must be at least 3 liters per minute or 0.10 cubic feet per minute to ensure minimum residence time for the sample inside the sample lines.
	f. Calculate the SO_2 equivalent for each run after correcting for moisture and oxygen.	The arithmetic average of the SO_2 equivalent for each sample during the run.	
	g. Correct the reduced sulfur samples to zero percent excess air.	Equation 1 of § 63.1568.	
	h. Establish each operating limit in Table 30 of this subpart that applies to you.	Data from the continuous parameter monitoring system.	
	i. Measure thermal incinerator: combustion zone temperature.	Data from the continuous parameter monitoring system.	Collect temperature monitoring data every 15 minutes during the entire period of the performance test; and determine and record the minimum hourly average temperature from all the readings.
	j. Measure thermal incinerator: oxygen concentration (percent, dry basis) in the vent stream.	Data from the continuous parameter monitoring system.	Collect oxygen concentration (percent, dry basis) data every 15 minutes during the entire period of the performance test; and determine and record the minimum hourly average percent excess oxygen concentration.

[80 FR 75312, Dec. 1, 2015]

Table 33 to Subpart UUU of Part 63—Initial Compliance With HAP Emission Limits for Sulfur Recovery Units

As stated in § 63.1568(b)(5), you shall meet each requirement in the following table that applies to you.

sfrattini on LAPJZKW1R2 with $$_JOB
VerDate Sep<11>2014 09:16 Apr 04, 2023 Jkt 256165 PO 00000 Frm 00211 Fmt 8010 Sfmt 8026 Q:\40\256165.XXX PC31

For . . .	For the following emission limit . . .	You have demonstrated initial compliance if . . .
1. Subject to NSPS: Each new or existing Claus sulfur recovery unit part of a sulfur recovery plant with design capacity greater than 20 LTD and subject to the NSPS for sulfur oxides in 40 CFR 60.104(a)(2) or 60.102a(f)(1).	a. 250 ppmv (dry basis) SO_2 at zero percent excess air, or concentration determined using Equation 1 of 40 CFR 60.102a(f)(1)(i), if you use an oxidation or reduction control system followed by incineration.	You have already conducted a performance test to demonstrate initial compliance with the NSPS and each 12-hour rolling average concentration of SO_2 emissions measured by the continuous emission monitoring system is less than or equal to 250 ppmv (dry basis) at zero percent excess air, or the concentration determined using Equation 1 of 40 CFR 60.102a(f)(1)(i). As part of the Notification of Compliance Status, you must certify that your vent meets the SO_2 limit. You are not required to do another performance test to demonstrate initial compliance. You have already conducted a performance evaluation to demonstrate initial compliance with the applicable performance specification. As part of your Notification of Compliance Status, you must certify that your continuous emission monitoring system meets the applicable requirements in § 63.1572. You are not required to do another performance evaluation to demonstrate initial compliance.
	b. 300 ppmv of reduced sulfur compounds calculated as ppmv SO_2 (dry basis) at zero percent excess air, or concentration determined using Equation 1 of 40 CFR 60.102a(f)(1)(i), if you use a reduction control system without incineration.	You have already conducted a performance test to demonstrate initial compliance with the NSPS and each 12-hour rolling average concentration of reduced sulfur compounds measured by your continuous emission monitoring system is less than or equal to 300 ppmv, calculated as ppmv SO_2 (dry basis) at zero percent excess air, or the concentration determined using Equation 1 of 40 CFR 60.102a(f)(1)(i). As part of the Notification of Compliance Status, you must certify that your vent meets the SO_2 limit. You are not required to do another performance test to demonstrate initial compliance. You have already conducted a performance evaluation to demonstrate initial compliance with the applicable performance specification. As part of your Notification of Compliance Status, you must certify that your continuous emission monitoring system meets the applicable requirements in § 63.1572. You are not required to do another performance evaluation to demonstrate initial compliance.
2. Option 1: Elect NSPS. Each new or existing sulfur recovery unit (Claus or other type, regardless of size) not subject to the NSPS for sulfur oxides in 40 CFR 60.104(a)(2) or 60.102a(f)(1).	a. 250 ppmv (dry basis) of SO_2 at zero percent excess air, or concentration determined using Equation 1 of 40 CFR 60.102a(f)(1)(i), if you use an oxidation or reduction control system followed by incineration.	Each 12-hour rolling average concentration of SO_2 emissions measured by the continuous emission monitoring system during the initial performance test is less than or equal to 250 ppmv (dry basis) at zero percent excess air, or the concentration determined using Equation 1 of 40 CFR 60.102a(f)(1)(i); and your performance evaluation shows the monitoring system meets the applicable requirements in § 63.1572.

sfrattini on LAPJZKW1R2 with $$_JOB
VerDate Sep<11>2014 09:16 Apr 04, 2023 Jkt 256165 PO 00000 Frm 00212 Fmt 8010 Sfmt 8002 Q:\40\256165.XXX PC31

For . . .	For the following emission limit . . .	You have demonstrated initial compliance if . . .
	b. 300 ppmv of reduced sulfur compounds calculated as ppmv SO_2 (dry basis) at zero percent excess air, or concentration determined using Equation 1 of 40 CFR 60.102a(f)(1)(i), if you use a reduction control system without incineration.	Each 12-hour rolling average concentration of reduced sulfur compounds measured by the continuous emission monitoring system during the initial performance test is less than or equal to 300 ppmv, calculated as ppmv SO_2 (dry basis) at zero percent excess air, or the concentration determined using Equation 1 of 40 CFR 60.102a(f)(1)(i); and your performance evaluation shows the continuous emission monitoring system meets the applicable requirements in § 63.1572.
3. Option 2: TRS limit. Each new or existing sulfur recovery unit (Claus or other type, regardless of size) not subject to the NSPS for sulfur oxides in 40 CFR 60.104(a)(2) or 60.102a(f)(1).	300 ppmv of TRS compounds expressed as an equivalent SO_2 concentration (dry basis) at zero percent oxygen.	If you use continuous parameter monitoring systems, the average concentration of TRS emissions measured using Method 15 during the initial performance test is less than or equal to 300 ppmv expressed as equivalent SO_2 concentration (dry basis) at zero percent oxygen. If you use a continuous emission monitoring system, each 12-hour rolling average concentration of TRS emissions measured by the continuous emission monitoring system during the initial performance test is less than or equal to 300 ppmv expressed as an equivalent SO_2 (dry basis) at zero percent oxygen; and your performance evaluation shows the continuous emission monitoring system meets the applicable requirements in § 63.1572.

[80 FR 75313, Dec. 1, 2015]

Table 34 to Subpart UUU of Part 63—Continuous Compliance With HAP Emission Limits for Sulfur Recovery Units

As stated in § 63.1568(c)(1), you shall meet each requirement in the following table that applies to you.

For . . .	For this emission limit . . .	You shall demonstrate continuous compliance by . . .
1. Subject to NSPS. Each new or existing Claus sulfur recovery unit part of a sulfur recovery plant with design capacity greater than 20 LTD and subject to the NSPS for sulfur oxides in 40 CFR 60.104(a)(2) or 60.102a(f)(1).	a. 250 ppmv (dry basis) of SO_2 at zero percent excess air, or concentration determined using Equation 1 of 40 CFR 60.102a(f)(1)(i), if you use an oxidation or reduction control system followed by incineration.	Collecting the hourly average SO_2 monitoring data (dry basis, percent excess air) and, if using Equation 1 of 40 CFR 60.102a(f)(1)(i), collecting the hourly O_2 concentration or flow monitoring data according to § 63.1572; determining and recording each 12-hour rolling average concentration of SO_2; maintaining each 12-hour rolling average concentration of SO_2 at or below the applicable emission limitation; and reporting any 12-hour rolling average concentration of SO_2 greater than the applicable emission limitation in the semiannual compliance report required by § 63.1575.

sfrattini on LAPJZKW1R2 with $$_JOB
VerDate Sep<11>2014 09:16 Apr 04, 2023 Jkt 256165 PO 00000 Frm 00213 Fmt 8010 Sfmt 8002 Q:\40\256165.XXX PC31

For . . .	For this emission limit . . .	You shall demonstrate continuous compliance by . . .
	b. 300 ppmv of reduced sulfur compounds calculated as ppmv SO_2 (dry basis) at zero percent excess air, or concentration determined using Equation 1 of 40 CFR 60.102a(f)(1)(i), if you use a reduction control system without incineration.	Collecting the hourly average reduced sulfur (and air or O_2 dilution and oxidation) monitoring data and, if using Equation 1 of 40 CFR 60.102a(f)(1)(i), collecting the hourly O_2 concentration or flow monitoring data according to § 63.1572; determining and recording each 12-hour rolling average concentration of reduced sulfur; maintaining each 12-hour rolling average concentration of reduced sulfur at or below the applicable emission limitation; and reporting any 12-hour rolling average concentration of reduced sulfur greater than the applicable emission limitation in the semiannual compliance report required by § 63.1575.
2. Option 1: Elect NSPS. Each new or existing sulfur recovery unit (Claus or other type, regardless of size) not subject to the NSPS for sulfur oxides in 40 CFR 60.104(a)(2) or 60.102a(f)(1).	a. 250 ppmv (dry basis) of SO_2 at zero percent excess air, or concentration determined using Equation 1 of 40 CFR 60.102a(f)(1)(i), if you use an oxidation or reduction control system followed by incineration.	Collecting the hourly average SO_2 data (dry basis, percent excess air) and, if using Equation 1 of 40 CFR 60.102a(f)(1)(i), collecting the hourly O_2 concentration or flow monitoring data according to § 63.1572; determining and recording each 12-hour rolling average concentration of SO_2; maintaining each 12-hour rolling average concentration of SO_2 at or below the applicable emission limitation; and reporting any 12-hour rolling average concentration of SO_2 greater than the applicable emission limitation in the semiannual compliance report required by § 63.1575.
	b. 300 ppmv of reduced sulfur compounds calculated as ppmv SO_2 (dry basis) at zero percent excess air, or concentration determined using Equation 1 of 40 CFR 60.102a(f)(1)(i), if you use a reduction control system without incineration.	Collecting the hourly average reduced sulfur (and air or O_2 dilution and oxidation) monitoring data and, if using Equation 1 of 40 CFR 60.102a(f)(1)(i), collecting the hourly O_2 concentration or flow monitoring data according to § 63.1572; determining and recording each 12-hour rolling average concentration of reduced sulfur; maintaining each 12-hour rolling average concentration of reduced sulfur at or below the applicable emission limitation; and reporting any 12-hour rolling average concentration of reduced sulfur greater than the applicable emission limitation in the semiannual compliance report required by § 63.1575.
3. Option 2: TRS limit. Each new or existing sulfur recovery unit (Claus or other type, regardless of size) not subject to the NSPS for sulfur oxides in 40 CFR 60.104(a)(2) or 60.102a(f)(1).	300 ppmv of TRS compounds, expressed as an SO_2 concentration (dry basis) at zero percent oxygen or reduced sulfur compounds calculated as ppmv SO_2 (dry basis) at zero percent excess air.	i. If you use continuous parameter monitoring systems, collecting the hourly average TRS monitoring data according to § 63.1572 and maintaining each 12-hour average concentration of TRS at or below the applicable emission limitation; or ii. If you use a continuous emission monitoring system, collecting the hourly average TRS monitoring data according to § 63.1572, determining and recording each 12-hour rolling average concentration of TRS; maintaining each 12-hour rolling average concentration of TRS at or below the applicable emission limitation; and reporting any 12-hour rolling average TRS concentration greater than the applicable emission limitation in the semiannual compliance report required by § 63.1575.

sfrattini on LAPJZKW1R2 with $$_JOB
VerDate Sep<11>2014 09:16 Apr 04, 2023 Jkt 256165 PO 00000 Frm 00214 Fmt 8010 Sfmt 8026 Q:\40\256165.XXX PC31

[80 FR 75315, Dec. 1, 2015]

TABLE 35 TO SUBPART UUU OF PART 63—CONTINUOUS COMPLIANCE WITH OPERATING LIMITS FOR HAP EMISSIONS FROM SULFUR RECOVERY UNITS

As stated in §63.1568(c)(1), you shall meet each requirement in the following table that applies to you.

For . . .	For this operating limit . . .	You shall demonstrate continuous compliance by . . .
1. Subject to NSPS. Each new or existing Claus sulfur recovery unit part of a sulfur recovery plant with design capacity greater than 20 LTD and subject to the NSPS for sulfur oxides in 40 CFR 60.104(a)(2) or 60.102a(f)(1).	Not applicable	Meeting the requirements of Table 34 of this subpart.
2. Option 1: Elect NSPS. Each new or existing sulfur recovery unit (Claus or other type, regardless of size) not subject to the NSPS for sulfur oxides in 40 CFR 60.104(a)(2) or 60.102a(f)(1).	Not applicable	Meeting the requirements of Table 34 of this subpart.
3. Option 2: TRS limit. Each new or existing sulfur recovery unit (Claus or other type, regardless of size) not subject to the NSPS for sulfur oxides in 40 CFR 60.104(a)(2) or 60.102a(f)(1).	a. Maintain the daily average combustion zone temperature above the level established during the performance test.	Collecting the hourly and daily average temperature monitoring data according to §63.1572; and maintaining the daily average combustion zone temperature at or above the limit established during the performance test
	b. The daily average oxygen concentration in the vent stream (percent, dry basis) must not fall below the level established during the performance test..	Collecting the hourly and daily average O_2 monitoring data according to §63.1572; and maintaining the average O_2 concentration above the level established during the performance test.
4. Startup or shutdown option 1: Electing to comply with §63.1568(a)(4)(ii). Each new or existing sulfur recovery unit (Claus or other type, regardless of size) during periods of startup or shutdown.	Using a flare meeting the requirements in §63.11(b) or §63.670.	On and after January 30, 2019, complying with the applicable requirements of §63.670. Prior to January 30, 2019, complying with the applicable requirements of either §63.11(b) or §63.670.
5. Startup or shutdown option 2: Electing to comply with §63.1568(a)(4)(iii). Each new or existing sulfur recovery unit (Claus or other type, regardless of size) during periods of startup or shutdown.	a. Minimum hourly average temperature of 1,200 degrees Fahrenheit.	Collecting continuous (at least once every 15 minutes) and hourly average temperature monitoring data according to §63.1572; and maintaining the daily average firebox temperature at or above 1,200 degrees Fahrenheit.
	b. Minimum hourly average outlet oxygen concentration of 2 volume percent (dry basis).	Collecting continuous (at least once every 15 minutes) and hourly average O_2 monitoring data according to §63.1572; and maintaining the average O_2 concentration at or above 2 volume percent (dry basis).

[80 FR 75316, Dec. 1, 2015]

TABLE 36 TO SUBPART UUU OF PART 63—WORK PRACTICE STANDARDS FOR HAP EMISSIONS FROM BYPASS LINES

As stated in §63.1569(a)(1), you shall meet each work practice standard in the following table that applies to you.

Option	You shall meet one of these equipment standards . . .
1. Option 1	Install and operate a device (including a flow indicator, level recorder, or electronic valve position monitor) to demonstrate, either continuously or at least every hour, whether flow is present in the by bypass line. Install the device at or as near as practical to the entrance to any bypass line that could divert the vent stream away from the control device to the atmosphere.
2. Option 2	Install a car-seal or lock-and-key device placed on the mechanism by which the bypass device flow position is controlled (e.g., valve handle, damper level) when the bypass device is in the closed position such that the bypass line valve cannot be opened without breaking the seal or removing the device.
3. Option 3	Seal the bypass line by installing a solid blind between piping flanges.
4. Option 4	Vent the bypass line to a control device that meets the appropriate requirements in this subpart.

sfrattini on LAPJZKW1R2 with $$_JOB
VerDate Sep<11>2014 09:16 Apr 04, 2023 Jkt 256165 PO 00000 Frm 00215 Fmt 8010 Sfmt 8026 Q:\40\256165.XXX PC31

[67 FR 17773, Apr. 11, 2002, as amended at 70 FR 6942, 6964, Feb. 9, 2005]

TABLE 37 TO SUBPART UUU OF PART 63—REQUIREMENTS FOR PERFORMANCE TESTS FOR BYPASS LINES

As stated in §63.1569(b)(1), you shall meet each requirement in the following table that applies to you.

For this standard . . .	You shall . . .
1. Option 1: Install and operate a flow indicator, level recorder, or electronic valve position monitor.	Record during the performance test for each type of control device whether the flow indicator, level recorder, or electronic valve position monitor was operating and whether flow was detected at any time during each hour of level the three runs comprising the performance test.

[67 FR 17773, Apr. 11, 2002, as amended at 70 FR 6942, Feb. 9, 2005]

TABLE 38 TO SUBPART UUU OF PART 63—INITIAL COMPLIANCE WITH WORK PRACTICE STANDARDS FOR HAP EMISSIONS FROM BYPASS LINES

As stated in §63.1569(b)(2), you shall meet each requirement in the following table that applies to you.

Option . . .	For this work practice standard . . .	You have demonstrated initial compliance if . . .
1. Each new or existing bypass line associated with a catalytic cracking unit, catalytic reforming unit, or sulfur recovery unit.	a. Option 1: Install and operate a device (including a flow indicator, level recorder, or electronic valve position monitor) to demonstrate, either continuously or at least every hour, whether flow is present in bypass line. Install the device at or as near as practical to the entrance to any bypass line that could divert the vent stream away from the control device to the atmosphere.	The installed equipment operates properly during each run of the performance test and no flow is present in the line during the test.
	b. Option 2: Install a car-seal or lock-and-key device placed on the mechanism by which the bypass device flow position is controlled (e.g., valve handle, damper level) when the bypass device is in the closed position such that the bypass line valve cannot be opened without breaking the seal or removing the device.	As part of the notification of compliance status, you certify that you installed the equipment, the equipment was operational by your compliance date, and you identify what equipment was installed.
	c. Option 3: Seal the bypass line by installing a solid blind between piping flanges.	See item 1.b of this table.
	d. Option 4: Vent the bypass line to a control device that meets the appropriate requirements in this subpart.	See item 1.b of this table.

[70 FR 6965, Feb. 9, 2005]

TABLE 39 TO SUBPART UUU OF PART 63—CONTINUOUS COMPLIANCE WITH WORK PRACTICE STANDARDS FOR HAP EMISSIONS FROM BYPASS LINES

As stated in §63.1569(c)(1), you shall meet each requirement in the following table that applies to you.

If you elect this standard . . .	You shall demonstrate continuous compliance by . . .
1. Option 1: Flow indicator, level recorder, or electronic valve position monitor.	Monitoring and recording on a continuous basis or at least every hour whether flow is present in the bypass line; visually inspecting the device at least once every hour if the device is not equipped with a recording system that provides a continuous record; and recording whether the device is operating properly and whether flow is present in the bypass line.
2. Option 2: Car-seal or lock-and-key device	Visually inspecting the seal or closure mechanism at least once every month; and recording whether the bypass line valve is maintained in the closed position and whether flow is present in the line.
3. Option 3: Solid blind flange	Visually inspecting the blind at least once a month; and recording whether the blind is maintained in the correct position such that the vent stream cannot be diverted through the bypass line.

sfrattini on LAPJZKW1R2 with $$_JOB
VerDate Sep<11>2014 09:16 Apr 04, 2023 Jkt 256165 PO 00000 Frm 00216 Fmt 8010 Sfmt 8002 Q:\40\256165.XXX PC31

If you elect this standard . . .	You shall demonstrate continuous compliance by . . .
4. Option 4: Vent to control device	Monitoring the control device according to appropriate subpart requirements.
5. Option 1, 2, 3, or 4	Recording and reporting the time and duration of any bypass.

[67 FR 17773, Apr. 11, 2002, as amended at 70 FR 6942, 6965, Feb. 9, 2005]

TABLE 40 TO SUBPART UUU OF PART 63—REQUIREMENTS FOR INSTALLATION, OPERATION, AND MAINTENANCE OF CONTINUOUS OPACITY MONITORING SYSTEMS AND CONTINUOUS EMISSION MONITORING SYSTEMS

As stated in §63.1572(a)(1) and (b)(1), you shall meet each requirement in the following table that applies to you.

This type of continuous opacity or emission monitoring system . . .	Must meet these requirements . . .
1. Continuous opacity monitoring system	Performance specification 1 (40 CFR part 60, appendix B).
2. PM CEMS; this monitor must include an O_2 monitor for correcting the data for excess air.	The requirements in 40 CFR 60.105a(d).
3. CO continuous emission monitoring system	Performance specification 4 (40 CFR part 60, appendix B); span value of 1,000 ppm; and procedure 1 (40 CFR part 60, appendix F) except relative accuracy test audits are required annually instead of quarterly.
4. CO continuous emission monitoring system used to demonstrate emissions average under 50 ppm (dry basis).	Performance specification 4 (40 CFR part 60, appendix B); and span value of 100 ppm.
5. SO_2 continuous emission monitoring system for sulfur recovery unit with oxidation control system or reduction control system; this monitor must include an O_2 monitor for correcting the data for excess air.	Performance specification 2 (40 CFR part 60, appendix B); span value of 500 ppm SO_2, or if using Equation 1 of 40 CFR 60.102a(f)(1)(i), span value of two times the limit at the highest O_2 concentration; use Methods 6 or 6C (40 CFR part 60, appendix A–4) for certifying the SO_2 monitor and Methods 3A or 3B (40 CFR part 60, appendix A–2) for certifying the O_2 monitor; and procedure 1 (40 CFR part 60, appendix F) except relative accuracy test audits are required annually instead of quarterly.
6. Reduced sulfur and O_2 continuous emission monitoring system for sulfur recovery unit with reduction control system not followed by incineration; this monitor must include an O_2 monitor for correcting the data for excess air unless exempted.	Performance specification 5 (40 CFR part 60, appendix B), except calibration drift specification is 2.5 percent of the span value instead of 5 percent; span value is 450 ppm reduced sulfur, or if using Equation 1 of 40 CFR 60.102a(f)(1)(i), span value of two times the limit at the highest O_2 concentration; use Methods 15 or 15A (40 CFR part 60, appendix A–5) for certifying the reduced sulfur monitor and Methods 3A or 3B (40 CFR part 60, appendix A–2) for certifying the O_2 monitor; if Method 3A or 3B yields O_2 concentrations below 0.25 percent during the performance evaluation, the O_2 concentration can be assumed to be zero and the O_2 monitor is not required; and procedure 1 (40 CFR part 60, appendix F), except relative accuracy test audits, are required annually instead of quarterly.
7. Instrument with an air or O_2 dilution and oxidation system to convert reduced sulfur to SO_2 for continuously monitoring the concentration of SO_2 instead of reduced sulfur monitor and O_2 monitor.	Performance specification 5 (40 CFR part 60, appendix B); span value of 375 ppm SO_2 or if using Equation 1 of 40 CFR 60.102a(f)(1)(i), span value of two times the limit at the highest O_2 concentration; use Methods 15 or 15A (40 CFR part 60, appendix A–5) for certifying the reduced sulfur monitor and 3A or 3B (40 CFR part 60, appendix A–2) for certifying the O_2 monitor; and procedure 1 (40 CFR part 60, appendix F), except relative accuracy test audits, are required annually instead of quarterly.
8. TRS continuous emission monitoring system for sulfur recovery unit; this monitor must include an O_2 monitor for correcting the data for excess air.	Performance specification 5 (40 CFR part 60, appendix B).
9. O_2 monitor for oxygen concentration	If necessary due to interferences, locate the oxygen sensor prior to the introduction of any outside gas stream; performance specification 3 (40 CFR part 60, appendix B; and procedure 1 (40 CFR part 60, appendix F), except relative accuracy test audits, are required annually instead of quarterly.

[80 FR 75317, Dec. 1, 2015]

sfrattini on LAPJZKW1R2 with $$_JOB
VerDate Sep<11>2014 09:16 Apr 04, 2023 Jkt 256165 PO 00000 Frm 00217 Fmt 8010 Sfmt 8026 Q:\40\256165.XXX PC31

TABLE 41 TO SUBPART UUU OF PART 63—REQUIREMENTS FOR INSTALLATION, OPERATION, AND MAINTENANCE OF CONTINUOUS PARAMETER MONITORING SYSTEMS

As stated in §63.1572(c)(1), you shall meet each requirement in the following table that applies to you.

If you use . . .	You shall . . .
1. pH strips	Use pH strips with an accuracy of ±10 percent.
2. pH meter	Locate the pH sensor in a position that provides a representative measurement of pH; ensure the sample is properly mixed and representative of the fluid to be measured. Use a pH sensor with an accuracy of at least ±0.2 pH units. Check the pH meter's calibration on at least one point at least once daily; check the pH meter's calibration on at least two points at least once quarterly; at least monthly, inspect all components for integrity and all electrical components for continuity; record the results of each calibration check and inspection.
3. Colormetric tube sampling system.	Use a colormetric tube sampling system with a printed numerical scale in ppmv, a standard measurement range of 1 to 10 ppmv (or 1 to 30 ppmv if applicable), and a standard deviation for measured values of no more than ±15 percent. System must include a gas detection pump and hot air probe if needed for the measurement range.
4. CO_2, O_2, and CO monitors for coke burn-off rate.	a. Locate the concentration sensor so that it provides a representative measurement of the content of the exit gas stream; ensure the sample is properly mixed and representative of the gas to be measured. Use a sensor with an accuracy of at least ±1 percent of the range of the sensor or to a nominal gas concentration of ±0.5 percent, whichever is greater. Use a monitor that is able to measure concentration on a dry basis or is able to correct for moisture content and record on a dry basis. Conduct calibration checks at least annually; conduct calibration checks following any period of more than 24 hours throughout which the sensor reading exceeds the manufacturer's specified maximum operating range or install a new sensor; at least quarterly, inspect all components for integrity and all electrical connections for continuity; record the results of each calibration and inspection. b. As an alternative, the requirements in 40 CFR 60.105a(b)(2) may be used.
5. BLD	Follow the requirements in 40 CFR 60.105a(c).
6. Voltage, secondary current, or total power input sensors.	Use meters with an accuracy of at least ±5 percent over the operating range. Each time that the unit is not operating, confirm that the meters read zero. Conduct a calibration check at least annually; conduct calibration checks following any period of more than 24 hours throughout which the meter reading exceeds the manufacturer's specified maximum operating range; at least monthly, inspect all components of the continuous parameter monitoring system for integrity and all electrical connections for continuity; record the results of each calibration check and inspection.
7. Pressure/Pressure drop[1] sensors.	Locate the pressure sensor(s) in a position that provides a representative measurement of the pressure and minimizes or eliminates pulsating pressure, vibration, and internal and external corrosion. Use a gauge with an accuracy of at least ±5 percent over the normal operating range or 0.12 kilopascals (0.5 inches of water column), whichever is greater. Review pressure sensor readings at least once a week for straightline (unchanging) pressure and perform corrective action to ensure proper pressure sensor operation if blockage is indicated; using an instrument recommended by the sensor's manufacturer, check gauge calibration and transducer calibration annually; conduct calibration checks following any period of more than 24 hours throughout which the pressure exceeded the manufacturer's specified maximum rated pressure or install a new pressure sensor; at least quarterly, inspect all components for integrity, all electrical connections for continuity, and all mechanical connections for leakage, unless the CPMS has a redundant pressure sensor; record the results of each calibration check and inspection.
8. Air flow rate, gas flow rate, or total water (or scrubbing liquid) flow rate sensors.	Locate the flow sensor(s) and other necessary equipment (such as straightening vanes) in a position that provides representative flow; reduce swirling flow or abnormal velocity distributions due to upstream and downstream disturbances. If you elect to comply with Option 3 (Ni lb/hr) or Option 4 (Ni lb/1,000 lb of coke burn-off) for the HAP metal emission limitations in §63.1564, install the continuous parameter monitoring system for gas flow rate as close as practical to the continuous opacity monitoring system; and if you don't use a continuous opacity monitoring system, install the continuous parameter monitoring system for gas flow rate as close as practical to the control device. Use a flow rate sensor with an accuracy of at least ±5 percent over the normal range of flow measured, or 1.9 liter per minute (0.5 gallons per minute), whichever is greater, for liquid flow. Use a flow rate sensor with an accuracy of at least ±5 percent over the normal range of flow measured, or 280 liters per minute (10 cubic feet per minute), whichever is greater, for gas flow. Conduct a flow sensor calibration check at least biennially (every two years); conduct a calibration check following any period of more than 24 hours throughout which the flow rate exceeded the manufacturer's specified maximum rated flow rate or install a new flow sensor; at least quarterly, inspect all components for leakage, unless the CPMS has a redundant flow sensor; record the results of each calibration check and inspection.

sfrattini on LAPJZKW1R2 with $$_JOB
VerDate Sep<11>2014 09:16 Apr 04, 2023 Jkt 256165 PO 00000 Frm 00218 Fmt 8010 Sfmt 8002 Q:\40\256165.XXX PC31

If you use . . .	You shall . . .
9. Temperature sensors ...	Locate the temperature sensor in the combustion zone, or in the ductwork immediately downstream of the combustion zone before any substantial heat exchange occurs or in the ductwork immediately downstream of the regenerator; locate the temperature sensor in a position that provides a representative temperature; shield the temperature sensor system from electromagnetic interference and chemical contaminants. Use a temperature sensor with an accuracy of at least ±1 percent over the normal range of temperature measured, expressed in degrees Celsius (C), or 2.8 degrees C, whichever is greater. Conduct calibration checks at least annually; conduct calibration checks following any period of more than 24 hours throughout which the temperature exceeded the manufacturer's specified maximum rated temperature or install a new temperature sensor; at least quarterly, inspect all components for integrity and all electrical connections for continuity, oxidation, and galvanic corrosion, unless the CPMS has a redundant temperature sensor; record the results of each calibration check and inspection.
10. Oxygen content sensors[2].	Locate the oxygen sensor so that it provides a representative measurement of the oxygen content of the exit gas stream; ensure the sample is properly mixed and representative of the gas to be measured. Use an oxygen sensor with an accuracy of at least ±1 percent of the range of the sensor or to a nominal gas concentration of ±0.5 percent, whichever is greater. Conduct calibration checks at least annually; conduct calibration checks following any period of more than 24 hours throughout which the sensor reading exceeds the manufacturer's specified maximum operating range or install a new oxygen sensor; at least quarterly, inspect all components for integrity and all electrical connections for continuity; record the results of each calibration and inspection.

[1] Not applicable to non-venturi wet scrubbers of the jet-ejector design.
[2] This does not replace the requirements for oxygen monitors that are required to use continuous emissions monitoring systems. The requirements in this table apply to oxygen sensors that are continuous parameter monitors, such as those that monitor combustion zone oxygen concentration and regenerator exit oxygen concentration.

[80 FR 75318, Dec. 1, 2015]

Table 42 to Subpart UUU of Part 63—Additional Information for Initial Notification of Compliance Status

As stated in § 63.1574(d), you shall meet each requirement in the following table that applies to you.

For . . .	You shall provide this additional information . . .
1. Identification of affected sources and emission points.	Nature, size, design, method of operation, operating design capacity of each affected source; identify each emission point for each HAP; identify any affected source or vent associated with an affected source not subject to the requirements of subpart UUU.
2. Initial compliance	Identification of each emission limitation you will meet for each affected source, including any option you select (i.e., NSPS, PM or Ni, flare, percent reduction, concentration, options for bypass lines); if applicable, certification that you have already conducted a performance test to demonstrate initial compliance with the NSPS for an affected source; certification that the vents meet the applicable emission limit and the continuous opacity or that the emission monitoring system meets the applicable performance specification; if applicable, certification that you have installed and verified the operational status of equipment by your compliance date for each bypass line that meets the requirements of Option 2, 3, or 4 in § 63.1569 and what equipment you installed; identification of the operating limit for each affected source, including supporting documentation; if your affected source is subject to the NSPS, certification of compliance with NSPS emission limitations and performance specifications; a brief description of performance test conditions (capacity, feed quality, catalyst, etc.); an engineering assessment (if applicable); and if applicable, the flare design (e.g., steam-assisted, air-assisted, or non-assisted), all visible emission readings, heat content determinations, flow rate measurements, and exit velocity determinations made during the Method 22 test.
3. Continuous compliance	Each monitoring option you elect; and identification of any unit or vent for which monitoring is not required; and the definition of "operating day." (This definition, subject to approval by the applicable permitting authority, must specify the times at which a 24-hr operating day begins and ends.)

[67 FR 17773, Apr. 11, 2002, as amended at 70 FR 6942, Feb. 9, 2005]

Table 43 to Subpart UUU of Part 63—Requirements for Reports

As stated in § 63.1575(a), you shall meet each requirement in the following table that applies to you.

sfrattini on LAPJZKW1R2 with $$_JOB
VerDate Sep<11>2014 09:16 Apr 04, 2023 Jkt 256165 PO 00000 Frm 00219 Fmt 8010 Sfmt 8026 Q:\40\256165.XXX PC31

You must submit . . .	The report must contain . . .	You shall submit the report . . .
1. A compliance report	If there are no deviations from any emission limitation or work practice standard that applies to you, a statement that there were no deviations from the standards during the reporting period and that no continuous opacity monitoring system or continuous emission monitoring system was inoperative, inactive, out-of-control, repaired, or adjusted; if you have a deviation from any emission limitation or work practice standard during the reporting period, the report must contain the information in § 63.1575(c) through (e).	Semiannually according to the requirements in § 63.1575(b).
2. Performance test and CEMS performance evaluation data.	On and after February 1, 2016, the information specified in § 63.1575(k)(1).	Semiannually according to the requirements in § 63.1575(b) and (f).

[80 FR 75319, Dec. 1, 2015, as amended at 83 FR 60727, Nov. 26, 2018]

Table 44 to Subpart UUU of Part 63—Applicability of NESHAP General Provisions to Subpart UUU

As stated in § 63.1577, you shall meet each requirement in the following table that applies to you.

Citation	Subject	Applies to subpart UUU	Explanation
§ 63.1(a)(1)–(4)	General Applicability	Yes.	
§ 63.1(a)(5)	[Reserved]	Not applicable.	
§ 63.1(a)(6)		Yes	Except the correct mail drop (MD) number is C404–04.
§ 63.1(a)(7)–(9)	[Reserved]	Not applicable.	
§ 63.1(a)(10)–(12)		Yes	Except that this subpart specifies calendar or operating day.
§ 63.1(b)(1)	Initial Applicability Determination for this part.	Yes.	
§ 63.1(b)(2)	[Reserved]	Not applicable.	
§ 63.1(b)(3)		Yes.	
§ 63.1(c)(1)	Applicability of this part after a Relevant Standard has been set under this part.	Yes.	
§ 63.1(c)(2)		No	Area sources are not subject to this subpart.
§ 63.1(c)(3)–(4)	[Reserved]	Not applicable.	
§ 63.1(c)(5)		Yes.	
§ 63.1(c)(6)	Reclassification	Yes.	
§ 63.1(d)	[Reserved]	Not applicable.	
§ 63.1(e)	Applicability of Permit Program	Yes.	
§ 63.2	Definitions	Yes	§ 63.1579 specifies that if the same term is defined in subparts A and UUU of this part, it shall have the meaning given in this subpart.
§ 63.3	Units and Abbreviations	Yes.	
§ 63.4(a)(1)–(2)	Prohibited Activities	Yes.	
§ 63.4(a)(3)–(5)	[Reserved]	Not applicable.	
§ 63.4(b)–(c)	Circumvention and Fragmentation	Yes.	
§ 63.5(a)	Construction and Reconstruction	Yes.	
§ 63.5(b)(1)		Yes.	
§ 63.5(b)(2)	[Reserved]	Not applicable.	
§ 63.5(b)(3)–(4)		Yes	In § 63.5(b)(4), replace the reference to § 63.9(b) with § 63.9(b)(4) and (5).
§ 63.5(b)(5)	[Reserved]	Not applicable.	
§ 63.5(b)(6)		Yes.	
§ 63.5(c)	[Reserved]	Not applicable.	
§ 63.5(d)(1)(i)	Application for Approval of Construction or Reconstruction—General Application Requirements.	Yes	Except this subpart specifies the application is submitted as soon as practicable before startup but not later than 90 days after the promulgation date if construction or reconstruction had commenced and initial startup had not occurred before promulgation.
§ 63.5(d)(1)(ii)		Yes	Except that emission estimates specified in § 63.5(d)(1)(ii)(H) are not required, and § 63.5(d)(1)(ii)(G) and (I) are Reserved and do not apply.

sfrattini on LAPJZKW1R2 with $$_JOB
VerDate Sep<11>2014 09:16 Apr 04, 2023 Jkt 256165 PO 00000 Frm 00220 Fmt 8010 Sfmt 8002 Q:\40\256165.XXX PC31

Citation	Subject	Applies to subpart UUU	Explanation
§ 63.5(d)(1)(iii)		No	This subpart specifies submission of notification of compliance status.
§ 63.5(d)(2)		Yes.	
§ 63.5(d)(3)		Yes.	
§ 63.5(d)(4)		Yes.	
§ 63.5(e)	Approval of Construction or Reconstruction.	Yes.	
§ 63.5(f)(1)	Approval of Construction or Reconstruction Based on State Review.	Yes.	
§ 63.5(f)(2)		Yes	Except that the cross-reference to § 63.9(b)(2) does not apply.
§ 63.6(a)	Compliance with Standards and Maintenance—Applicability.	Yes.	
§ 63.6(b)(1)–(4)	Compliance Dates for New and Reconstructed Sources.	Yes.	
§ 63.6(b)(5)		Yes	Except that this subpart specifies different compliance dates for sources.
§ 63.6(b)(6)	[Reserved]	Not applicable.	
§ 63.6(b)(7)	Compliance Dates for New and Reconstructed Area Sources That Become Major.	Yes.	
§ 63.6(c)(1)–(2)	Compliance Dates for Existing Sources.	Yes	Except that this subpart specifies different compliance dates for sources subject to Tier II gasoline sulfur control requirements.
§ 63.6(c)(3)–(4)	[Reserved]	Not applicable.	
§ 63.6(c)(5)	Compliance Dates for Existing Area Sources That Become Major.	Yes.	
§ 63.6(d)	[Reserved]	Not applicable.	
§ 63.6(e)(1)(i)	General Duty to Minimize Emissions	No	See § 63.1570(c) for general duty requirement.
§ 63.6(e)(1)(ii)	Requirement to Correct Malfunctions as Soon as Possible.	No.	
§ 63.6(e)(1)(iii)	Compliance with Standards and Maintenance Requirements.	Yes.	
§ 63.6(e)(2)	[Reserved]	Not Applicable.	
§ 63.6(e)(3)(i)	Startup, Shutdown, and Malfunction Plan Requirements.	No.	
§ 63.6(e)(3)(ii)	[Reserved]	Not applicable.	
§ 63.6(e)(3)(iii)–(ix)		No.	
§ 63.6(f)(1)	SSM Exemption	No.	
§ 63.6(f)(2)(i)–(iii)(C)	Compliance with Standards and Maintenance Requirements.	Yes.	
§ 63.6(f)(2)(iii)(D)		Yes.	
§ 63.6(f)(2)(iv)–(v)		Yes.	
§ 63.6(f)(3)		Yes	Except the cross-references to § 63.6(f)(1) and (e)(1)(i) are changed to § 63.1570(c) and this subpart specifies how and when the performance test results are reported.
§ 63.6(g)	Alternative Standard	Yes.	
§ 63.6(h)(1)	SSM Exemption for Opacity/VE Standards.	No.	
§ 63.6(h)(2)(i)	Determining Compliance with Opacity/VE Standards.	No	This subpart specifies methods.
§ 63.6(h)(2)(ii)	[Reserved]	Not applicable.	
§ 63.6(h)(2)(iii)		Yes.	
§ 63.6(h)(3)	[Reserved]	Not applicable.	
§ 63.6(h)(4)	Notification of Opacity/VE Observation Date.	Yes	Applies to Method 22 (40 CFR part 60, appendix A–7) tests.
§ 63.6(h)(5)	Conducting Opacity/VE Observations.	No.	
§ 63.6(h)(6)	Records of Conditions During Opacity/VE Observations.	Yes	Applies to Method 22 (40 CFR part 60, appendix A–7) observations.
§ 63.6(h)(7)(i)	Report COM Monitoring Data from Performance Test.	Yes	Except this subpart specifies how and when the performance test results are reported.
§ 63.6(h)(7)(ii)	Using COM Instead of Method 9	No.	
§ 63.6(h)(7)(iii)	Averaging Time for COM during Performance Test.	Yes.	
§ 63.6(h)(7)(iv)	COM Requirements	Yes.	
§ 63.6(h)(7)(v)	COMS Results and Visual Observations.	Yes.	

sfrattini on LAPJZKW1R2 with $$_JOB
VerDate Sep<11>2014 09:16 Apr 04, 2023 Jkt 256165 PO 00000 Frm 00221 Fmt 8010 Sfmt 8002 Q:\40\256165.XXX PC31

Citation	Subject	Applies to subpart UUU	Explanation
§ 63.6(h)(8)	Determining Compliance with Opacity/VE Standards.	Yes	Except this subpart specifies how and when the performance test results are reported.
§ 63.6(h)(9)	Adjusted Opacity Standard	Yes.	
§ 63.6(i)(1)–(14)	Extension of Compliance	Yes	Extension of compliance under § 63.6(i)(4) not applicable to a facility that installs catalytic cracking feed hydrotreating and receives an extended compliance date under § 63.1563(c).
§ 63.6(i)(15)	[Reserved]	Not applicable.	
§ 63.6(i)(16)		Yes.	
§ 63.6(j)	Presidential Compliance Exemption	Yes.	
§ 63.7(a)(1)	Performance Test Requirements Applicability.	Yes	Except that this subpart specifies the applicable test and demonstration procedures.
§ 63.7(a)(2)	Performance Test Dates	Yes	Except this subpart specifies that the results of initial performance tests must be submitted within 150 days after the compliance date.
§ 63.7(a)(3)	Section 114 Authority	Yes.	
§ 63.7(a)(4)	Force Majeure	Yes.	
§ 63.7(b)	Notifications	Yes	Except that this subpart specifies notification at least 30 days prior to the scheduled test date rather than 60 days.
§ 63.7(c)	Quality Assurance Program/Site-Specific Test Plan.	Yes	Except that when this subpart specifies to use 40 CFR part 60, appendix F, out of control periods are to be defined as specified in part 60, appendix F.
§ 63.7(d)	Performance Test Facilities	Yes.	
§ 63.7(e)(1)	Performance Testing	No	See § 63.1571(b)(1).
§ 63.7(e)(2)–(4)	Conduct of Tests	Yes.	
§ 63.7(f)	Alternative Test Method	Yes.	
§ 63.7(g)	Data Analysis, Recordkeeping, Reporting.	Yes	Except this subpart specifies how and when the performance test or performance evaluation results are reported and § 63.7(g)(2) is reserved and does not apply.
§ 63.7(h)	Waiver of Tests	Yes.	
§ 63.8(a)(1)	Monitoring Requirements-Applicability.	Yes.	
§ 63.8(a)(2)	Performance Specifications	Yes.	
§ 63.8(a)(3)	[Reserved]	Not applicable.	
§ 63.8(a)(4)	Monitoring with Flares	Yes	Except that for a flare complying with § 63.670, the cross-reference to § 63.11 in this paragraph does not include § 63.11(b).
§ 63.8(b)(1)	Conduct of Monitoring	Yes.	
§ 63.8(b)(2)–(3)	Multiple Effluents and Multiple Monitoring Systems.	Yes	This subpart specifies the required monitoring locations.
§ 63.8(c)(1)	Monitoring System Operation and Maintenance.	Yes.	
§ 63.8(c)(1)(i)	General Duty to Minimize Emissions and CMS Operation.	No	See § 63.1570(c).
§ 63.8(c)(1)(ii)	Keep Necessary Parts for CMS	Yes.	
§ 63.8(c)(1)(iii)	Requirement to Develop SSM Plan for CMS.	No.	
§ 63.8(c)(2)–(3)	Monitoring System Installation	Yes	Except that this subpart specifies that for continuous parameter monitoring systems, operational status verification includes completion of manufacturer written specifications or installation, operation, and calibration of the system or other written procedures that provide adequate assurance that the equipment will monitor accurately.
§ 63.8(c)(4)	Continuous Monitoring System Requirements.	Yes.	
§ 63.8(c)(5)	COMS Minimum Procedures	Yes.	
§ 63.8(c)(6)	CMS Requirements	Yes.	
§ 63.8(c)(7)–(8)	CMS Requirements	Yes.	

sfrattini on LAPJZKW1R2 with $$_JOB
VerDate Sep<11>2014 09:16 Apr 04, 2023 Jkt 256165 PO 00000 Frm 00222 Fmt 8010 Sfmt 8002 Q:\40\256165.XXX PC31

Citation	Subject	Applies to subpart UUU	Explanation
§ 63.8(d)(1)–(2)	Quality Control Program for CMS	Yes.	
§ 63.8(d)(3)	Written Procedures for CMS	No.	
§ 63.8(e)	CMS Performance Evaluation	Yes	Except this subpart specifies how and when the performance evaluation results are reported.
§ 63.8(f)(1)–(5)	Alternative Monitoring Methods	Yes	Except that this subpart specifies procedures for requesting alternative monitoring systems and alternative parameters.
§ 63.8(f)(6)	Alternative to Relative Accuracy Test.	Yes	Applicable to continuous emission monitoring systems if performance specification requires a relative accuracy test audit.
§ 63.8(g)(1)–(4)	Reduction of Monitoring Data	Yes	Applies to continuous opacity monitoring system or continuous emission monitoring system.
§ 63.8(g)(5)	Data Reduction	No	This subpart specifies requirements.
§ 63.9(a)	Notification Requirements—Applicability.	Yes	Duplicate Notification of Compliance Status report to the Regional Administrator may be required.
§ 63.9(b)(1)–(2)	Initial Notifications	Yes	Except that notification of construction or reconstruction is to be submitted as soon as practicable before startup but no later than 30 days after the effective date if construction or reconstruction had commenced but startup had not occurred before the effective date.
§ 63.9(b)(3)	[Reserved]	Not applicable.	
§ 63.9(b)(4)–(5)	Initial Notification Information	Yes	Except § 63.9(b)(4)(ii)–(iv), which are reserved and do not apply.
§ 63.9(c)	Request for Extension of Compliance.	Yes.	
§ 63.9(d)	New Source Notification for Special Compliance Requirements.	Yes.	
§ 63.9(e)	Notification of Performance Test	Yes	Except that notification is required at least 30 days before test.
§ 63.9(f)	Notification of VE/Opacity Test	Yes.	
§ 63.9(g)	Additional Notification Requirements for Sources with Continuous Monitoring Systems.	Yes.	
§ 63.9(h)	Notification of Compliance Status	Yes	Except that this subpart specifies the notification is due no later than 150 days after compliance date, and except that the reference to § 63.5(d)(1)(ii)(H) in § 63.9(h)(5) does not apply.
§ 63.9(i)	Adjustment of Deadlines	Yes.	
§ 63.9(j)	Change in Previous Information	Yes.	
§ 63.9(k)	Electronic reporting procedures	Yes	Only as specified in § 63.9(j).
63.10(a)	Recordkeeping and Reporting Applicability.	Yes.	
§ 63.10(b)(1)	General Recordkeeping Requirements.	Yes.	
§ 63.10(b)(2)(i)	Recordkeeping of Occurrence and Duration of Startups and Shutdowns.	No.	
§ 63.10(b)(2)(ii)	Recordkeeping of Malfunctions	No	See § 63.1576(a)(2) for recordkeeping of (1) date, time and duration; (2) listing of affected source or equipment, and an estimate of the volume of each regulated pollutant emitted over the standard; and (3) actions taken to minimize emissions and correct the failure.
§ 63.10(b)(2)(iii)	Maintenance Records	Yes.	
§ 63.10(b)(2)(iv)–(v)	Actions Taken to Minimize Emissions During SSM.	No.	
§ 63.10(b)(2)(vi)	Recordkeeping for CMS Malfunctions.	Yes.	
§ 63.10(b)(2)(vii)–(xiv).	Other CMS Requirements	Yes.	
§ 63.10(b)(3)	Recordkeeping for Applicability Determinations..	Yes.	

sfrattini on LAPJZKW1R2 with $$_JOB
VerDate Sep<11>2014 09:16 Apr 04, 2023 Jkt 256165 PO 00000 Frm 00223 Fmt 8010 Sfmt 8002 Q:\40\256165.XXX PC31

Citation	Subject	Applies to subpart UUU	Explanation
§63.10(c)(1)–(6)	Additional Records for Continuous Monitoring Systems.	Yes	Except §63.10(c)(2)–(4), which are Reserved and do not apply.
§63.10(c)(7)–(8)	Additional Recordkeeping Requirements for CMS—Identifying Exceedances and Excess Emissions.	Yes.	
§63.10(c)(9)	[Reserved]	Not applicable.	
§63.10(c)(10)	Recording Nature and Cause of Malfunctions.	No	See §63.1576(a)(2) for malfunctions recordkeeping requirements.
§63.10(c)(11)	Recording Corrective Actions	No	See §63.1576(a)(2) for malfunctions recordkeeping requirements.
§63.10(c)(12)–(14)	Additional CMS Recordkeeping Requirements.	Yes.	
§63.10(c)(15)	Use of SSM Plan	No.	
§63.10(d)(1)	General Reporting Requirements	Yes.	
§63.10(d)(2)	Performance Test Results	No	This subpart specifies how and when the performance test results are reported.
§63.10(d)(3)	Opacity or VE Observations	Yes.	
§63.10(d)(4)	Progress Reports	Yes.	
§63.10(d)(5)	SSM Reports	No	See §63.1575(d) for CPMS malfunction reporting and §63.1575(e) for COMS and CEMS malfunction reporting.
§63.10(e)(1)–(2)	Additional CMS Reports	Yes	Except this subpart specifies how and when the performance evaluation results are reported.
§63.10(e)(3)	Excess Emissions/CMS Performance Reports.	No	This subpart specifies the applicable requirements.
§63.10(e)(4)	COMS Data Reports	Yes	Except this subpart specifies how and when the performance test results are reported.
§63.10(f)	Recordkeeping/Reporting Waiver	Yes.	
§63.11(a)	Control Device and Work Practice Requirements Applicability.	Yes.	
§63.11(b)	Flares	Yes	Except that flares complying with §63.670 are not subject to the requirements of §63.11(b).
§63.11(c)–(e)	Alternative Work Practice for Monitoring Equipment for Leaks.	Yes.	
§63.12	State Authority and Delegations	Yes.	
§63.13	Addresses	Yes.	
§63.14	Incorporation by Reference	Yes.	
§63.15	Availability of Information and Confidentiality.	Yes.	
§63.16	Performance Track Provisions	Yes	

[80 FR 75320, Dec. 1, 2015, as amended at 83 FR 60727, Nov. 26, 2018; 85 FR 73901, Nov. 19, 2020]

Appendix A to Subpart UUU of Part 63—Determination of Metal Concentration on Catalyst Particles (Instrumental Analyzer Procedure)

1.0 Scope and Application.

1.1 Analytes. The analytes for which this method is applicable include any elements with an atomic number between 11 (sodium) and 92 (uranium), inclusive. Specific analytes for which this method was developed include:

Analyte	CAS No.	Minimum detectable limit
Nickel compounds	7440–02–0	<2 % of span.
Total chlorides	16887–00–6	<2 % of span.

1.2 Applicability. This method is applicable to the determination of analyte concentrations on catalyst particles. This method is applicable for catalyst particles obtained from the fluid catalytic cracking unit

sfrattini on LAPJZKW1R2 with $$_JOB
VerDate Sep<11>2014 09:16 Apr 04, 2023 Jkt 256165 PO 00000 Frm 00224 Fmt 8010 Sfmt 8002 Q:\40\256165.XXX PC31

(FCCU) regenerator (*i.e.*, equilibrium catalyst), from air pollution control systems operated for the FCCU catalyst regenerator vent (FCCU fines), from catalytic reforming units (CRU), and other processes as specified within an applicable regulation. This method is applicable only when specified within the regulation.

1.3 Data Quality Objectives. Adherence to the requirements of this method will enhance the quality of the data obtained from the analytical method.

2.0 Summary of Method.

2.1 A representative sample of catalyst particles is collected, prepared, and analyzed for analyte concentration using either energy or wavelength dispersive X-ray fluorescent (XRF) spectrometry instrumental analyzers. In both types of XRF spectrometers, the instrument irradiates the sample with high energy (primary) x-rays and the elements in the sample absorb the x-rays and then re-emit secondary (fluorescent) x-rays of characteristic wavelengths for each element present. In energy dispersive XRF spectrometers, all secondary x-rays (of all wavelengths) enter the detector at once. The detector registers an electric current having a height proportional to the photon energy, and these pulses are then separated electronically, using a pulse analyzer. In wavelength dispersive XRF spectrometers, the secondary x-rays are dispersed spatially by crystal diffraction on the basis of wavelength. The crystal and detector are made to synchronously rotate and the detector then receives only one wavelength at a time. The intensity of the x-rays emitted by each element is proportional to its concentration, after correcting for matrix effects. For nickel compounds and total chlorides, the XRF instrument response is expected to be linear to analyte concentration. Performance specifications and test procedures are provided to ensure reliable data.

3.0 Definitions.

3.1 Measurement System. The total equipment required for the determination of analyte concentration. The measurement system consists of the following major subsystems:

3.1.1 Sample Preparation. That portion of a system used for one or more of the following: sample acquisition, sample transport, sample conditioning, or sample preparation prior to introducing the sample into the analyzer.

3.1.2 Analyzer. That portion of the system that senses the analyte to be measured and generates an output proportional to its concentration.

3.1.3 Data Recorder. A digital recorder or personal computer used for recording measurement data from the analyzer output.

3.2 Span. The upper limit of the gas concentration measurement range displayed on the data recorder.

3.3 Calibration Standards. Prepared catalyst samples or other samples of known analyte concentrations used to calibrate the analyzer and to assess calibration drift.

3.4 Energy Calibration Standard. Calibration standard, generally provided by the XRF instrument manufacturer, used for assuring accuracy of the energy scale.

3.5 Accuracy Assessment Standard. Prepared catalyst sample or other sample of known analyte concentrations used to assess analyzer accuracy error.

3.6 Zero Drift. The difference in the measurement system output reading from the initial value for zero concentration level calibration standard after a stated period of operation during which no unscheduled maintenance, repair, or adjustment took place.

3.7 Calibration Drift. The difference in the measurement system output reading from the initial value for the mid-range calibration standard after a stated period of operation during which no unscheduled maintenance, repair, or adjustment took place.

3.8 Spectral Interferences. Analytical interferences and excessive biases caused by elemental peak overlap, escape peak, and sum peak interferences between elements in the samples.

3.9 Calibration Curve. A graph or other systematic method of establishing the relationship between the analyzer response and the actual analyte concentration introduced to the analyzer.

3.10 Analyzer Accuracy Error. The difference in the measurement system output reading and the ideal value for the accuracy assessment standard.

4.0 Interferences.

4.1 Spectral interferences with analyte line intensity determination are accounted for within the method program. No action is required by the XRF operator once these interferences have been addressed within the method.

4.2 The X-ray production efficiency is affected by particle size for the very lightest elements. However, particulate matter (PM) 2.5 particle size effects are substantially <1 percent for most elements. The calibration standards should be prepared with material of similar particle size or be processed (ground) to produce material of similar particle size as the catalyst samples to be analyzed. No additional correction for particle size is performed. Alternatively, the sample can be fused in order to eliminate any potential particle size effects.

sfrattini on LAPJZKW1R2 with $$_JOB
VerDate Sep<11>2014 09:16 Apr 04, 2023 Jkt 256165 PO 00000 Frm 00225 Fmt 8010 Sfmt 8002 Q:\40\256165.XXX PC31

5.0 Safety.

5.1 Disclaimer. This method may involve hazardous materials, operations, and equipment. This test method may not address all of the safety problems associated with its use. It is the responsibility of the user of this test method to establish appropriate safety and health practices and determine the applicability of regulatory limitations prior to performing this test method.

5.2 X-ray Exposure. The XRF uses X-rays; XRF operators should follow instrument manufacturer's guidelines to protect from accidental exposure to X-rays when the instrument is in operation.

5.3 Beryllium Window. In most XRF units, a beryllium (Be) window is present to separate the sample chamber from the X-ray tube and detector. The window is very fragile and brittle. Do not allow sample or debris to fall onto the window, and avoid using compressed air to clean the window because it will cause the window to rupture. If the window should rupture, note that Be metal is poisonous. Use extreme caution when collecting pieces of Be and consult the instrument manufacturer for advice on cleanup of the broken window and replacement.

6.0 Equipment and Supplies.

6.1 Measurement System. Use any measurement system that meets the specifications of this method listed in section 13. The typical components of the measurement system are described below.

6.1.1 Sample Mixer/Mill. Stainless steel, or equivalent to grind/mix catalyst and binders, if used, to produce uniform particle samples.

6.1.2 Sample Press/Fluxer. Stainless steel, or equivalent to produce pellets of sufficient size to fill analyzer sample window, or alternatively, a fusion device capable of preparing a fused disk of sufficient size to fill analyzer sample window.

6.1.3 Analytical Balance. ±0.0001 gram accuracy for weighing prepared samples (pellets).

6.1.4 Analyzer. An XRF spectrometer to determine the analyte concentration in the prepared sample. The analyzer must meet the applicable performance specifications in section 13.

6.1.5 Data Recorder. A digital recorder or personal computer for recording measurement data. The data recorder resolution (*i.e.*, readability) must be 0.5 percent of span. Alternatively, a digital or analog meter having a resolution of 0.5 percent of span may be used to obtain the analyzer responses and the readings may be recorded manually.

7.0 Reagents and Standards.

7.1 Calibration Standards. The calibration standards for the analyzer must be prepared catalyst samples or other material of similar particle size and matrix as the catalyst samples to be tested that have known concentrations of the analytes of interest. Preparation (grinding/milling/fusion) of the calibration standards should follow the same processes used to prepare the catalyst samples to be tested. The calibration standards values must be established as the average of a minimum of three analyses using an approved EPA or ASTM method with instrument analyzer calibrations traceable to the U.S. National Institute of Standards and Technology (NIST), if available. The maximum percent deviation of the triplicate calibration standard analyses should agree within 10 percent of the average value for the triplicate analysis (see Figure 1). If the calibration analyses do not meet this criteria, the calibration standards must be re-analyzed. If unacceptable variability persists, new calibration standards must be prepared. Approved methods for the calibration standard analyses include, but are not limited to, EPA Methods 6010B, 6020, 7520, or 7521 of SW–846.[1] Use a minimum of four calibration standards as specified below (see Figure 1):

7.1.1 High-Range Calibration Standard. Concentration equivalent to 80 to 100 percent of the span. The concentration of the high-range calibration standard should exceed the maximum concentration anticipated in the catalyst samples.

7.1.2 Mid-Range Calibration Standard. Concentration equivalent to 40 to 60 percent of the span.

7.1.3 Low-Range Calibration Standard. Concentration equivalent to 1 to 20 percent of the span. The concentration of the low-range calibration standard should be selected so that it is less than either one-fourth of the applicable concentration limit or of the lowest concentration anticipated in the catalyst samples.

7.1.4 Zero Calibration Standard. Concentration of less than 0.25 percent of the span.

7.2 Accuracy Assessment Standard. Prepare an accuracy assessment standard and determine the ideal value for the accuracy assessment standard following the same procedures used to prepare and analyze the calibration standards as described in section 7.1. The maximum percent deviation of the triplicate accuracy assessment standard analyses should agree within 10 percent of the average value for the triplicate analysis (see Figure 1). The concentration equivalent of the accuracy assessment standard must be between 20 and 80 percent of the span.

7.3 Energy Calibration Standard. Generally, the energy calibration standard will be provided by the XRF instrument manufacturer for energy dispersive spectrometers. Energy calibration is performed using the manufacturer's recommended calibration standard and involves measurement of a specific energy line (based on the metal in the

sfrattini on LAPJZKW1R2 with $$_JOB
VerDate Sep<11>2014 09:16 Apr 04, 2023 Jkt 256165 PO 00000 Frm 00226 Fmt 8010 Sfmt 8002 Q:\40\256165.XXX PC31

energy calibration standard). This is generally an automated procedure used to assure the accuracy of the energy scale. This calibration standard may not be applicable to all models of XRF spectrometers (particularly wavelength dispersive XRF spectrometers).

8.0 Sample Collection, Preservation, Transport, and Storage. [Reserved]

9.0 Quality Control.

9.1 Energy Calibration. For energy dispersive spectrometers, conduct the energy calibration by analyzing the energy calibration standard provided by the manufacturer. The energy calibration involves measurement of a specific energy line (based on the metal in the energy calibration standard) and then determination of the difference between the measured peak energy value and the ideal value. This analysis, if applicable, should be performed daily prior to any sample analyses to check the instrument's energy scale. This is generally an automated procedure and assures the accuracy of the energy scale. If the energy scale calibration process is not automated, follow the manufacturer's procedures to manually adjust the instrument, as necessary.

9.2 Zero Drift Test. Conduct the zero drift test by analyzing the analyte concentration output by the measurement system with the initial calibration value for the zero calibration standard (see Figure 2). This analysis should be performed with each set of samples analyzed.

9.3 Calibration Drift Test. Conduct the calibration drift test by analyzing the analyte concentration output by the measurement system with the initial calibration value for the mid-range calibration standard (see Figure 2). This analysis should be performed with each set of samples analyzed.

9.4 Analyzer Accuracy Test. Conduct the analyzer accuracy test by analyzing the accuracy assessment standard and comparing the value output by the measurement system with the ideal value for the accuracy assessment standard (see Figure 2). This analysis should be performed with each set of samples analyzed.

10.0 Calibration and Standardization.

10.1 Perform the initial calibration and set-up following the instrument manufacturer's instructions. These procedures should include, at a minimum, the major steps listed in sections 10.2 and 10.3. Subsequent calibrations are to be performed when either a quality assurance/quality control (QA/QC) limit listed in section 13 is exceeded or when there is a change in the excitation conditions, such as a change in the tube, detector, X-ray filters, or signal processor. Calibrations are typically valid for 6 months to 1 year.

10.2 Instrument Calibration. Calibration is performed initially with calibration standards of similar matrix and binders, if used, as the samples to be analyzed (see Figure 1).

10.3 Reference Peak Spectra. Acquisition of reference spectra is required only during the initial calibration. As long as no processing methods have changed, these peak shape references remain valid. This procedure consists of placing the standards in the instrument and acquiring individual elemental spectra that are stored in the method file with each of the analytical conditions. These reference spectra are used in the standard deconvolution of the unknown spectra.

11.0 Analytical Procedure.

11.1 Sample Preparation. Prepare catalyst samples using the same procedure used to prepare the calibration standards. Measure and record the weight of sample used. Measure and record the amount of binder, if any, used. Pellets or films must be of sufficient size to cover the analyzer sample window.

11.2 Sample Analyses. Place the prepared catalyst samples into the analyzer. Follow the manufacturer's instructions for analyzing the samples.

11.3 Record and Store Data. Use a digital recorder or personal computer to record and store results for each sample. Record any mechanical or software problems encountered during the analysis.

12.0 Data Analysis and Calculations.

Carry out the following calculations, retaining at least one extra significant figure beyond that of the acquired data. Round off figures after final calculation.

12.1 Drift. Calculate the zero and calibration drift for the tests described in sections 9.2 and 9.3 (see also Figure 2) as follows:

$$\text{QC Value} = \frac{\text{CurrentAnalyzerCal. Response} - \text{InitialCal. Response}}{\text{Span}} \times 100 \qquad \text{(Eq. A-1)}$$

Where:

CurrentAnalyzerCal.Response = Instrument response for current QC sample analyses;

InitialCal.Response = Initial instrument response for calibration standard;

sfrattini on LAPJZKW1R2 with $$_JOB
VerDate Sep<11>2014 09:16 Apr 04, 2023 Jkt 256165 PO 00000 Frm 00227 Fmt 8010 Sfmt 8002 Q:\40\256165.XXX PC31
ER09FE05.010</MATH>

QC Value = QC metric (zero drift or calibration drift), percent of span;
Span = Span of the monitoring system.

12.2 Analyzer Accuracy. Calculate the analyzer accuracy error for the tests described in section 9.4 (see also Figure 2) as follows:

$$\text{Accuracy Value} = \frac{\text{CurrentAnalyzerCal. Response} - \text{IdealCal. Response}}{\text{IdealCal. Response}} \times 100 \qquad \text{(Eq. A-2)}$$

Where:

Accuracy Value = Percent difference of instrument response to the ideal response for the accuracy assessment standard;
CurrentAnalyzerCal.Response = Instrument response for current QC sample analyses;
IdealCal.Response = Ideal instrument response for the accuracy assessment standard.

13.0 Method Performance.

13.1 Analytical Range. The analytical range is determined by the instrument design. For this method, a portion of the analytical range is selected by choosing the span of the monitoring system. The span of the monitoring system must be selected such that it encompasses the range of concentrations anticipated to occur in the catalyst sample. If applicable, the span must be selected such that the analyte concentration equivalent to the emission standard is not less than 30 percent of the span. If the measured analyte concentration exceeds the concentration of the high-range calibration standard, the sample analysis is considered invalid. Additionally, if the measured analyte concentration is less than the concentration of the low-range calibration standard but above the detectable limit, the sample analysis results must be flagged with a footnote stating, in effect, that the analyte was detected but that the reported concentration is below the lower quantitation limit.

13.2 Minimum Detectable Limit. The minimum detectable limit depends on the signal-to-noise ratio of the measurement system. For a well-designed system, the minimum detectable limit should be less than 2 percent of the span.

13.3 Zero Drift. Less than ±2 percent of the span.

13.4 Calibration Drift. Less than ±5 percent of the span.

13.5 Analyzer Accuracy Error. Less than ±10 percent.

14.0 Pollution Prevention. [Reserved]

15.0 Waste Management. [Reserved]

16.0 Alternative Procedures. [Reserved]

17.0 References.

1. U.S. Environmental Protection Agency. 1998. Test Methods for Evaluating Solid Waste, Physical/Chemical Methods. EPA Publication No. SW–846, Revision 5 (April 1998). Office of Solid Waste, Washington, DC.

18.0 Tables, Diagrams, Flowcharts, and Validation Data.

Date:					
Analytic Method Used:					
	Zero [a]	Low-Range [b]	Mid-Range [c]	High-Range [d]	Accuracy Std [e]
Sample Run:.					
1.					
2.					
3.					
Average.					
Maximum Percent Deviation.					

[a] Average must be less than 0.25 percent of span.
[b] Average must be 1 to 20 percent of span.
[c] Average must be 40 to 60 percent of span.
[d] Average must be 80 to 100 percent of span.
[e] Average must be 20 to 80 percent of span.

Figure 1. Data Recording Sheet for Analysis of Calibration Samples.

Date:

Source Identification:
Run Number:
Test Personnel:
Span:

sfrattini on LAPJZKW1R2 with $$_JOB
VerDate Sep<11>2014 09:16 Apr 04, 2023 Jkt 256165 PO 00000 Frm 00228 Fmt 8010 Sfmt 8002 Q:\40\256165.XXX PC31
ER09FE05.011</MATH>

	Initial calibration response	Current analyzer calibration response	Drift (percent of span)
Zero Standard.			
Mid-range Standard.			

	Ideal calibration response	Current analyzer calibration response	Accuracy error (percent of ideal)
Accuracy Standard.			

Figure 2. Data Recording Sheet for System Calibration Drift Data.

[70 FR 6970, Feb. 9, 2005, as amended at 80 FR 75325, Dec. 1, 2015]

Subpart VVV—National Emission Standards for Hazardous Air Pollutants: Publicly Owned Treatment Works

SOURCE: 82 FR 49525, Oct. 26, 2017, unless otherwise noted.

APPLICABILITY

§63.1580 Am I subject to this subpart?

(a) You are subject to this subpart if the following are all true:

(1) You own or operate a publicly owned treatment works (POTW) that includes an affected source (§63.1595);

(2) The affected source is located at a Group 2 POTW which is a major source of HAP emissions, or at any Group 1 POTW regardless of whether or not it is a major source of HAP; and

(3) Your POTW is required to develop and implement a pretreatment program as defined by 40 CFR 403.8, or your POTW meets the general criteria for development and implementation of a pretreatment program.

(b) If your existing POTW treatment plant is not located at a major source as of October 26, 1999, but thereafter becomes a major source for any reason other than reconstruction, then, for the purpose of this subpart, your POTW treatment plant would be considered an existing source.

NOTE TO PARAGRAPH (b): See §63.2 of the National Emission Standards for Hazardous Air Pollutants (NESHAP) General Provisions in subpart A of this part for the definitions of major source and area source.

(c) If you commence construction or reconstruction of your POTW treatment plant after December 1, 1998, then the requirements for a new POTW apply.

§63.1581 Does the subpart distinguish between different types of POTW treatment plants?

Yes, POTW treatment plants are divided into two subcategories: Group 1 POTW treatment plants and Group 2 POTW treatment plants, as described in paragraphs (a) through (c) of this section.

(a) Your POTW is a Group 1 POTW treatment plant if an industrial user complies with its NESHAP by using the treatment and controls located at your POTW treatment plant. Your POTW treatment plant accepts the regulated waste stream and provides treatment and controls as an agent for the industrial user. Group 1 POTW treatment plant is defined in §63.1595.

(b) Your POTW is a Group 2 POTW treatment plant if your POTW treats wastewater that is not subject to control by another NESHAP or the industrial user does not comply with its NESHAP by using the treatment and controls located at your POTW treatment plant. ''Group 2 POTW treatment plant'' is defined in §63.1595.

(c) If, in the future, an industrial user complies with its NESHAP by using the treatment and controls located at your POTW treatment plant, then your Group 2 POTW treatment plant becomes a Group 1 POTW treatment plant on the date your POTW begins treating that regulated industrial wastewater stream.

sfrattini on LAPJZKW1R2 with $$_JOB
VerDate Sep<11>2014 09:16 Apr 04, 2023 Jkt 256165 PO 00000 Frm 00229 Fmt 8010 Sfmt 8010 Q:\40\256165.XXX PC31

REQUIREMENTS FOR GROUP 1 POTW TREATMENT PLANTS

§ 63.1582 [Reserved]

§ 63.1583 What are the emission points and control requirements for a Group 1 POTW treatment plant?

(a) The emission points and control requirements for an existing Group 1 POTW treatment plant are specified in the appropriate NESHAP for the industrial user(s).

(b) The emission points and control requirements for a new Group 1 POTW treatment plant are both those specified by the appropriate NESHAP which apply to the industrial user(s) who discharge their waste for treatment to the POTW, and those emission points and control requirements set forth in § 63.1586(b) or (c), as applicable.

(c) If your existing or new Group 1 POTW treatment plant accepts one or more specific regulated industrial waste streams as part of compliance with one or more other NESHAP, then you are subject to all the requirements of each appropriate NESHAP for each waste stream.

(d) At all times, the POTW must operate and maintain any affected source, including associated air pollution control equipment and monitoring equipment, in a manner consistent with safety and good air pollution control practices for minimizing emissions. The general duty to minimize emissions does not require the POTW to make any further efforts to reduce emissions if levels required by the applicable standard have been achieved. Determination of whether a source is operating in compliance with operation and maintenance requirements will be based on information available to the Administrator, which may include, but is not limited to, monitoring results, review of operation and maintenance procedures, review of operation and maintenance records, and inspection of the source.

§ 63.1584 [Reserved]

§ 63.1585 How does a Group 1 POTW treatment plant demonstrate compliance?

(a) An existing Group 1 POTW treatment plant demonstrates compliance by operating treatment and control devices which meet all requirements specified in the appropriate NESHAP. Requirements may include performance tests, routine monitoring, recordkeeping, and reporting.

(b) A new Group 1 POTW treatment plant demonstrates compliance by operating treatment and control devices which meet all requirements specified in the appropriate NESHAP and by meeting the requirements specified in § 63.1586, as applicable, as well as the applicable requirements in §§ 63.1588 through 63.1595.

REQUIREMENTS FOR GROUP 1 AND GROUP 2 POTW TREATMENT PLANTS

§ 63.1586 What are the emission points and control requirements for a Group 1 or Group 2 POTW?

(a) An existing Group 1 or Group 2 POTW treatment plant must comply with the initial notification requirements in § 63.1591(a).

(b) *Cover and control standard.* Except as provided in paragraph (c) of this section, new Group 1 and Group 2 POTW treatment plants must install covers on the emission points up to, but not including, the secondary influent pumping station or the secondary treatment units. These emission points are treatment units that include, but are not limited to, influent waste stream conveyance channels, bar screens, grit chambers, grinders, pump stations, aerated feeder channels, primary clarifiers, primary effluent channels, and primary screening stations. In addition, all covered units, except primary clarifiers, must have the air in the headspace underneath the cover ducted to a control device in accordance with the standards for closed-vent systems and control devices in § 63.693 of subpart DD—National Emission Standards for Hazardous Air Pollutants from Off-site Waste and Recovery Operations of this part, except you may substitute visual inspections for leak detection rather than Method 21 of appendix A–7 of part 60 of this chapter. Covers must meet the following requirements:

(1) Covers must be tightly fitted and designed and operated to prevent exposure of the wastewater to the atmosphere. This includes, but is not limited

sfrattini on LAPJZKW1R2 with $$_JOB
VerDate Sep<11>2014 09:16 Apr 04, 2023 Jkt 256165 PO 00000 Frm 00230 Fmt 8010 Sfmt 8010 Q:\40\256165.XXX PC31

to, the absence of visible cracks, holes, or gaps in the roof sections or between the roof and the supporting wall; broken, cracked, or otherwise damaged seals or gaskets on closure devices; and broken or missing hatches, access covers, caps, or other closure devices.

(2) If wastewater is in a treatment unit, each opening in the cover must be maintained in a closed, sealed position, unless plant personnel are present and conducting wastewater or sludge sampling, or equipment inspection, maintenance, or repair.

(c) *HAP fraction emitted standard.* As an alternative to the requirements in paragraph (b) of this section, a new Group 1 and Group 2 POTW treatment plant may comply by demonstrating, for all emission points up to, but not including, the secondary influent pumping station or the secondary treatment units, that the annual rolling average HAP fraction emitted (calculated as specified in §63.1588(c)(3)) does not exceed 0.014. You must demonstrate that for your POTW treatment plant, the sum of all HAP emissions from these units divided by the sum of all HAP mass loadings to the POTW treatment plant results in an annual rolling average of the HAP fraction emitted of no greater than 0.014. You may use any combination of pretreatment, wastewater treatment plant modifications, and control devices to achieve this performance standard.

(d) At all times, the POTW must operate and maintain any affected source, including associated air pollution control equipment and monitoring equipment, in a manner consistent with safety and good air pollution control practices for minimizing emissions. The general duty to minimize emissions does not require the POTW to make any further efforts to reduce emissions if the requirements of the applicable standard have been met. Determination of whether a source is operating in compliance with operation and maintenance requirements will be based on information available to the Administrator, which may include, but is not limited to, monitoring results, review of operation and maintenance procedures, review of operation and maintenance records, and inspection of the source.

§63.1587 When do I have to comply?

Sources subject to this subpart are required to achieve compliance on or before the dates specified in table 2 of this subpart.

§63.1588 How do Group 1 and Group 2 POTW treatment plants demonstrate compliance?

(a) If you are complying with §63.1586(b) by using covers, you must conduct the following inspections:

(1) You must visually check the cover and its closure devices for defects that could result in air emissions. Defects include, but are not limited to, visible cracks, holes, or gaps in the roof sections or between the roof and the supporting wall; broken, cracked, or otherwise damaged seals or gaskets on closure devices; and broken or missing hatches, access covers, caps, or other closure devices.

(2) You must perform an initial visual inspection within 60 calendar days of becoming subject to this NESHAP and perform follow-up inspections at least once per year, thereafter.

(3) In the event that you find a defect on a cover on a treatment unit in use, you must repair the defect within 45 calendar days. If you cannot repair within 45 calendar days, you must notify the EPA or the delegated authority immediately and report the reason for the delay and the date you expect to complete the repair. If you find a defect on a cover on a treatment unit that is not in service, you must repair the defect prior to putting the treatment unit back in wastewater service.

(b) If you own or operate a control device used to meet the requirements for §63.1586(b), you must comply with the inspection and monitoring requirements of §63.695(c) of subpart DD of this part.

(c) To comply with the HAP fraction emitted standard specified in §63.1586(c), you must develop, to the satisfaction of the Administrator, an Inspection and Monitoring Plan. This Inspection and Monitoring Plan must include, at a minimum, the following:

(1) A method to determine the influent HAP mass loading, *i.e.*, the annual

sfrattini on LAPJZKW1R2 with $$_JOB
VerDate Sep<11>2014 09:16 Apr 04, 2023 Jkt 256165 PO 00000 Frm 00231 Fmt 8010 Sfmt 8010 Q:\40\256165.XXX PC31

mass quantity for each HAP entering the wastewater treatment plant.

(2) A method to determine your POTW treatment plant's annual HAP emissions for all units up to, but not including, the secondary influent pumping station or the secondary treatment units. The method you use to determine your HAP emissions, such as modeling or direct source measurement, must:

(i) Be approved by the Administrator for use at your POTW;

(ii) Account for all factors affecting emissions from your POTW treatment plant including, but not limited to, emissions from wastewater treatment units; emissions resulting from inspection, maintenance, and repair activities; fluctuations (e.g., daily, monthly, annual, seasonal) in your influent wastewater HAP concentrations; annual industrial loading; performance of control devices; or any other factors that could affect your annual HAP emissions; and

(iii) Include documentation that the values and sources of all data, operating conditions, assumptions, etc., used in your method result in an accurate estimation of annual emissions from your POTW treatment plant.

(3) A method to demonstrate that your POTW treatment plant meets the HAP fraction emitted standard specified in §63.1586(c), *i.e.*, the sum of all HAP emissions from paragraph (c)(2) of this section divided by the sum of all HAP mass loadings from paragraph (c)(1) of this section results in a fraction emitted of 0.014 or less to demonstrate compliance with §63.1586(c). The Inspection and Monitoring Plan must require, at a minimum, that you perform the calculations shown in paragraphs (c)(3)(i) through (viii) of this section within 90 days of the end of each month. This calculation shall demonstrate that your annual rolling average of the HAP fraction emitted is 0.014 or less when demonstrating compliance with §63.1586(c).

(i) Determine the average daily flow in million gallons per day (MGD) of the wastewater entering your POTW treatment plant for the month;

(ii) Determine the flow-weighted monthly concentration of each HAP listed in Table 1 to subpart DD of this part that is reasonably anticipated to be present in your influent;

(iii) Using the information in paragraphs (c)(3)(i) and (ii) of this section, determine a total annual flow-weighted loading in pounds per day (lbs/day) of each HAP entering your POTW treatment plant;

(iv) Sum up the values for each individual HAP loading in paragraph (c)(3)(iii) of this section and determine a total annual flow-weighted loading value (lbs/day) for all HAP entering your POTW treatment plant for the current month;

(v) Based on the current month's information in paragraph (c)(3)(iii) of this section along with source testing and emission modeling, for each HAP, determine the annual emissions (lbs/day) from all wastewater units up to, but not including, secondary treatment units;

(vi) Sum up the values in paragraph (c)(3)(v) of this section and calculate the total annual emissions value for the month for all HAP from all wastewater treatment units up to, but not including, secondary treatment units;

(vii) Calculate the HAP fraction emitted value for the month, using Equation 1 of this section as follows:

$$f_e\text{monthly} = \sum E / \sum L \quad \text{(Eq. 1)}$$

Where:

$f_e$monthly = HAP fraction emitted for the previous month

ΣE = Total HAP emissions value from paragraph (c)(3)(vi) of this section

ΣL = Total annual loading from paragraph (c)(3)(iv) of this section

(viii) Average the HAP fraction emitted value for the month determined in paragraph (c)(3)(vii) of this section, with the values determined for the previous 11 months, to calculate an annual rolling average of the HAP fraction emitted.

(4) A method to demonstrate, to the satisfaction of the Administrator, that your POTW treatment plant is in continuous compliance with the requirements of §63.1586(c). Continuous compliance means that your emissions, when averaged over the course of a year, do not exceed the level of emissions that allows your POTW to comply with §63.1586(c). For example, you may identify a parameter(s) that you

sfrattini on LAPJZKW1R2 with $$_JOB
VerDate Sep<11>2014 09:16 Apr 04, 2023 Jkt 256165 PO 00000 Frm 00232 Fmt 8010 Sfmt 8010 Q:\40\256165.XXX PC31
ER26OC17.018<GPH>

can monitor that assures your emissions, when averaged over the entire year, will meet the requirements in § 63.1586(c). Some example parameters that may be considered for monitoring include your wastewater influent HAP concentration and flow, industrial loading from your permitted industrial users, and your control device performance criteria. Where emission reductions are due to proper operation of equipment, work practices, or other operational procedures, your demonstration must specify the frequency of inspections and the number of days to completion of repairs.

(d) Prior to receiving approval on the Inspection and Monitoring Plan, you must follow the plan submitted to the Administrator as specified in § 63.1590(f).

§ 63.1589 What records must I keep?

(a) To comply with the cover and control standard specified in § 63.1586(b), you must prepare and maintain the records required in paragraphs (a)(1) through (4) of this section:

(1) A record for each treatment unit inspection required by § 63.1588(a). You must include a treatment unit identification number (or other unique identification description as selected by you) and the date of inspection.

(2) For each defect detected during inspections required by § 63.1588(a), you must record the location of the defect, a description of the defect, the date of detection, the corrective action taken to repair the defect, and the date the repair to correct the defect is completed.

(3) If repair of the defect is delayed as described in § 63.1588(a)(3), you must also record the reason for the delay and the date you expect to complete the repair.

(4) If you own or operate a control device used to meet the requirements for § 63.1586(b), you must comply with the recordkeeping requirements of § 63.696(a), (b), (g), and (h).

(b) To comply with the HAP fraction emitted standard specified in § 63.1586(c), you must prepare and maintain the records required in paragraphs (b)(1) through (3) of this section:

(1) A record of the methods and data used to determine your POTW treatment plant's annual HAP loading and HAP emissions as determined in § 63.1588(c)(1) and (2) as part of your Inspection and Monitoring Plan;

(2) A record of the methods and data used to determine that your POTW treatment plant meets the HAP fraction emitted standard of 0.014 or less, as determined in § 63.1588(c)(3) as part of your Inspection and Monitoring Plan; and

(3) A record of the methods and data that demonstrates that your POTW treatment plant is in continuous compliance with the requirements of § 63.1588(c)(4) to calculate annual emissions as specified in your Inspection and Monitoring Plan.

(c) The POTW must record the malfunction information specified in paragraphs (c)(1) through (3) of this section.

(1) In the event that an affected unit fails to meet an applicable standard, record the number of failures. For each failure, record the date, time, and duration of the failure.

(2) For each failure to meet an applicable standard, record and retain a list of the affected sources or equipment, an estimate of the tons per year of each regulated pollutant emitted over any emission limit and a description of the method used to estimate the emissions.

(3) Record actions taken to minimize emissions in accordance with § 63.1583(d) or § 63.1586(d) and any corrective actions taken to return the affected unit to its normal or usual manner of operation.

(d) Any records required to be maintained by this part that are submitted electronically via the EPA's Compliance and Emissions Data Reporting Interface (CEDRI) may be maintained in electronic format. This ability to maintain electronic copies does not affect the requirement for facilities to make records, data, and reports available upon request to a delegated air agency or the EPA as part of an on-site compliance evaluation.

§ 63.1590 What reports must I submit?

(a) An existing Group 1 POTW must meet the reporting requirements specified in the appropriate NESHAP for the industrial user(s).

sfrattini on LAPJZKW1R2 with $$_JOB
VerDate Sep<11>2014 09:16 Apr 04, 2023 Jkt 256165 PO 00000 Frm 00233 Fmt 8010 Sfmt 8010 Q:\40\256165.XXX PC31

(b) A new Group 1 or Group 2 POTW must submit annual reports containing the information specified in paragraphs (b)(1) through (4) of this section, if applicable. You must submit annual reports following the procedure specified in paragraph (b)(5) of this section. For new units, the initial annual report is due 15 months after your POTW becomes subject to the requirements in this subpart and must cover the first 12 months of operation after your POTW becomes subject to the requirements of this subpart. Subsequent annual reports are due by the same date each year as the initial annual report and must contain information for the 12-month period following the 12-month period included in the previous annual report.

(1) The general information specified in paragraphs (b)(1)(i) and (ii) of this section must be included in all reports.

(i) The company name, POTW treatment plant name, and POTW treatment plant address, including county where the POTW is located; and

(ii) Beginning and ending dates of the reporting period.

(2) If you use covers to comply with the requirements of § 63.1586(b), you must submit the following:

(i) The dates of each visual inspection conducted;

(ii) The defects found during each visual inspection; and

(iii) For each defect found during a visual inspection, how the defects were repaired, whether the repair has been completed, and either the date each repair was completed or the date each repair is expected to be completed.

(3) If you comply with the HAP fraction emitted standard in § 63.1586(c), you must submit each value of the annual rolling average HAP fraction emitted as calculated in § 63.1588(c)(3)(vii) for the period covered by the annual report. Identify each value by the final month included in the calculation.

(4) If a source fails to meet an applicable standard, report such events in the annual report. Report the number of failures to meet an applicable standard. For each instance, report the start date, start time, and duration of each failure, as well as a list of the affected sources or equipment. If you comply with the cover and control standard in § 63.1586(b), for each failure, the report must include the percent control achieved. If you comply with the HAP fraction emitted standard in § 63.1586(c), for each failure, the report must include the HAP fraction emitted. You must include an estimate of the tons per year of each regulated pollutant emitted over the emission limit and a description of the method used to estimate the emissions in the report.

(5) You must submit the report to the Administrator at the appropriate address listed in § 63.13, unless the Administrator agrees to or species an alternate reporting method. Beginning on October 28, 2019 or once the reporting form has been available in CEDRI for 1 year, whichever is later, you must submit subsequent annual reports to the EPA via CEDRI. (CEDRI can be accessed through the EPA's Central Data Exchange (CDX)(*https://cdx.epa.gov/*)). You must use the appropriate electronic report template on the CEDRI Web site for this subpart or an alternate electronic file format consistent with the extensible markup language (XML) schema listed on the CEDRI Web site (*https://www.epa.gov/electronic-reporting-air-emissions/compliance-and-emissions-data-reporting-interface-cedri*). The date report templates become available in CEDRI will be listed on the CEDRI Web site. The reports must be submitted by the deadline specified in this subpart, regardless of the method in which the reports are submitted. If you claim that some of the information required to be submitted via CEDRI is confidential business information (CBI), you shall submit a complete report generated using the appropriate form in CEDRI or an alternate electronic file consistent with the extensible markup language (XML) schema listed on the EPA's CEDRI Web site, including information claimed to be CBI, on a compact disc, flash drive, or other commonly used electronic storage medium to the EPA. The electronic medium shall be clearly marked as CBI and mailed to U.S. EPA/OAQPS/CORE CBI Office, Attention: Group Leader, Measurement Policy Group, MD C404–02, 4930 Old Page Rd., Durham, NC 27703. The same file with the CBI omitted shall be submitted to

sfrattini on LAPJZKW1R2 with $$_JOB
VerDate Sep<11>2014 09:16 Apr 04, 2023 Jkt 256165 PO 00000 Frm 00234 Fmt 8010 Sfmt 8010 Q:\40\256165.XXX PC31

the EPA via the EPA's CDX as described earlier in this paragraph.

(c) If you own or operate a control device used to meet the cover and control standard in §63.1586(b), you must submit the notifications and reports required by §63.697(b), including a notification of performance tests; a performance test report; a malfunction report; and a summary report. These notifications and reports must be submitted to the Administrator, except for performance test reports. Within 60 calendar days after the date of completing each performance test (as defined in §63.2) required by subpart DD of this part, you must submit the results of the performance test following the procedure specified in paragraphs (c)(1) through (3) of this section.

(1) For data collected using test methods supported by the EPA's Electronic Reporting Tool (ERT) as listed on the EPA's ERT Web site (*https://www.epa/gov/electronic-reporting-air-emissions/electronic-reporting-tool-ert*) at the time of the test, you must submit the results of the performance test to the EPA via CEDRI. Performance test data must be submitted in a file format generated through the use of the EPA's ERT or an alternate electronic file format consistent with the XML schema listed on the EPA's ERT Web site.

(2) For data collected using test methods that are not supported by the EPA's ERT as listed on the EPA's ERT Web site at the time of the test, you must submit the results of the performance test to the Administrator at the appropriate address listed in §63.13 of subpart A of this part, unless the Administrator agrees to or specifies an alternate reporting method.

(3) If you claim that some of the performance test information being submitted under paragraph (b)(1) of this section is CBI, you must submit a complete file generated through the use of the EPA's ERT or an alternate electronic file consistent with the XML schema listed on the EPA's ERT Web site, including information claimed to be CBI, on a compact disc, flash drive, or other commonly used electronic storage medium to the EPA. The electronic medium must be clearly marked as CBI and mailed to U.S. EPA/OAQPS/CORE CBI Office, Attention: Group Leader, Measurement Policy Group, MD C404–02, 4930 Old Page Rd., Durham, NC 27703. The same ERT or alternate file with the CBI omitted must be submitted to the EPA via the EPA's CDX as described in paragraph (c)(1) of this section.

(d) You must comply with the delay of repair reporting required in §63.1588(a)(3).

(e) You may apply to the Administrator for a waiver of recordkeeping and reporting requirements by complying with the requirements of §63.10(f). Electronic reporting to the EPA cannot be waived.

(f) To comply with the HAP fraction emitted standard specified in §63.1586(c), you must submit, for approval by the Administrator, an Inspection and Monitoring Plan explaining your compliance approach 90 calendar days prior to beginning operation of your new POTW or by April 24, 2018, whichever is later.

(g) If you are required to electronically submit a report through the CEDRI in the EPA's CDX, and due to a planned or actual outage of either the EPA's CEDRI or CDX systems within the period of time beginning 5 business days prior to the date that the submission is due, you will be or are precluded from accessing CEDRI or CDX and submitting a required report within the time prescribed, you may assert a claim of EPA system outage for failure to timely comply with the reporting requirement. You must submit notification to the Administrator in writing as soon as possible following the date you first knew, or through due diligence should have known, that the event may cause or caused a delay in reporting. You must provide to the Administrator a written description identifying the date, time and length of the outage; a rationale for attributing the delay in reporting beyond the regulatory deadline to the EPA system outage; describe the measures taken or to be taken to minimize the delay in reporting; and identify a date by which you propose to report, or if you have already met the reporting requirement at the time of the notification, the

sfrattini on LAPJZKW1R2 with $$_JOB
VerDate Sep<11>2014 09:16 Apr 04, 2023 Jkt 256165 PO 00000 Frm 00235 Fmt 8010 Sfmt 8010 Q:\40\256165.XXX PC31

date you reported. In any circumstance, the report must be submitted electronically as soon as possible after the outage is resolved. The decision to accept the claim of EPA system outage and allow an extension to the reporting deadline is solely within the discretion of the Administrator.

(h) If you are required to electronically submit a report through CEDRI in the EPA's CDX and a force majeure event is about to occur, occurs, or has occurred or there are lingering effects from such an event within the period of time beginning five business days prior to the date the submission is due, the owner or operator may assert a claim of force majeure for failure to timely comply with the reporting requirement. For the purposes of this section, a force majeure event is defined as an event that will be or has been caused by circumstances beyond the control of the affected facility, its contractors, or any entity controlled by the affected facility that prevents you from complying with the requirement to submit a report electronically within the time period prescribed. Examples of such events are acts of nature (e.g., hurricanes, earthquakes, or floods), acts of war or terrorism, or equipment failure or safety hazard beyond the control of the affected facility (e.g., large scale power outage). If you intend to assert a claim of force majeure, you must submit notification to the Administrator in writing as soon as possible following the date you first knew, or through due diligence should have known, that the event may cause or caused a delay in reporting. You must provide to the Administrator a written description of the force majeure event and a rationale for attributing the delay in reporting beyond the regulatory deadline to the force majeure event; describe the measures taken or to be taken to minimize the delay in reporting; and identify a date by which you propose to report, or if you have already met the reporting requirement at the time of the notification, the date you reported. In any circumstance, the reporting must occur as soon as possible after the force majeure event occurs. The decision to accept the claim of force majeure and allow an extension to the reporting deadline is solely within the discretion of the Administrator.

§ 63.1591 What are my notification requirements?

(a) You must submit an initial notification that your POTW treatment plant is subject to these standards as specified in paragraphs (a)(1) and (2) of this section.

(1) If you have an existing Group 1 or Group 2 POTW treatment plant, you must submit an initial notification by October 26, 2018, or no later than 120 days after the source becomes subject to this subpart, whichever is later.

(2) If you have a new Group 1 or Group 2 POTW treatment plant, you must submit an initial notification upon startup, or when the source becomes subject to this subpart, whichever is later.

(b) The initial notification must include the information included in paragraphs (b)(1) through (4) of this section.

(1) Your name and address;

(2) The address (*i.e.*, physical location) of your POTW treatment plant;

(3) An identification of these standards as the basis of the notification and your POTW treatment plant's compliance date; and

(4) A brief description of the nature, size, design, and method of operation of your POTW treatment plant, including its operating design capacity and an identification of each point of emission for each HAP, or if a definitive identification is not yet possible, a preliminary identification of each point of emission for each HAP.

(c) You must submit a notification of compliance status as required in § 63.9(h), as specified below:

(1) If you comply with § 63.1586(b) and use covers on the emission points and route air in the headspace underneath the cover to a control device, you must submit a notification of compliance status as specified in § 63.9(h) that includes a description of the POTW treatment units and installed covers, as well as the information required for control devices including the performance test results.

(2) If you comply with § 63.1586(c) by meeting the HAP fraction emitted standard, submission of the Inspection and Monitoring Plan as required in

sfrattini on LAPJZKW1R2 with $$_JOB
VerDate Sep<11>2014 09:16 Apr 04, 2023 Jkt 256165 PO 00000 Frm 00236 Fmt 8010 Sfmt 8010 Q:\40\256165.XXX PC31

§§63.1588(c) and 63.1590(f) meets the requirement for submitting a notification of compliance status report in §63.9(h).

(d) You must notify the Administrator, within 30 calendar days of discovering that you are out of compliance with an applicable requirement of this subpart, including the following:

(1) The requirement to route the air in the headspace underneath the cover of all units equipped with covers, except primary clarifiers, to a control device as specified in §63.1586(b).

(2) The HAP fraction emitted standard as specified in §63.1586(c).

(3) The requirement to operate and maintain the affected source as specified in §63.1586(d).

(4) The requirement to inspect covers annually and repair defects as specified in §63.1588(a).

(5) The requirement to comply with the inspection and monitoring requirements of §63.695(c) as specified in §63.1588(b).

(6) The procedures specified in an Inspection and Monitoring Plan prepared as specified in §63.1588(c).

(7) The requirements specified in an appropriate NESHAP for which the Group 1 POTW treatment plan treats regulated industrial waste as specified in §63.1583(a) or (b), as applicable.

[82 FR 49525, Oct. 26, 2017, as amended at 85 FR 73902, Nov. 19, 2020]

§63.1592 Which General Provisions apply to my POTW treatment plant?

(a) Table 1 to this subpart lists the General Provisions (40 CFR part 63, subpart A) which do and do not apply to POTW treatment plants.

(b) Unless a permit is otherwise required by law, the owner or operator of a Group 1 POTW treatment plant which is not a major source is exempt from the permitting requirements established by 40 CFR part 70.

§63.1593 [Reserved]

§63.1594 Who enforces this subpart?

(a) This subpart can be implemented and enforced by the U.S. EPA, or a delegated authority such as the applicable state, local, or tribal agency. If the U.S. EPA Administrator has delegated authority to a state, local, or tribal agency, then that agency, in addition to the U.S. EPA, has the authority to implement and enforce this subpart. Contact the applicable U.S. EPA Regional Office to find out if implementation and enforcement of this subpart is delegated to a state, local, or tribal agency.

(b) In delegating implementation and enforcement authority of this subpart to a state, local, or tribal agency under subpart E of this part, the authorities contained in paragraphs (b)(1) through (5) of this section are retained by the Administrator of U.S. EPA and cannot be delegated to the state, local, or tribal agency.

(1) Approval of alternatives to the requirements in §§63.1580, 63.1583, and 63.1586 through 63.1588.

(2) Approval of major alternatives to test methods under §63.7(e)(2)(ii) and (f), as defined in §63.90, and as required in this subpart.

(3) Approval of major alternatives to monitoring under §63.8(f), as defined in §63.90, and as required in this subpart.

(4) Approval of major alternatives to recordkeeping and reporting under §63.10(f), as defined in §63.90, and as required in this subpart.

(5) Approval of an alternative to any electronic reporting to the EPA required by this subpart.

§63.1595 List of definitions.

As used in this subpart:

Affected source means the group of all equipment that comprise the POTW treatment plant.

Cover means a device that prevents or reduces air pollutant emissions to the atmosphere by forming a continuous barrier over the waste material managed in a treatment unit. A cover may have openings (such as access hatches, sampling ports, gauge wells) that are necessary for operation, inspection, maintenance, and repair of the treatment unit on which the cover is used. A cover may be a separate piece of equipment which can be detached and removed from the treatment unit, or a cover may be formed by structural features permanently integrated into the design of the treatment unit. The cover and its closure devices must be made of

sfrattini on LAPJZKW1R2 with $$_JOB
VerDate Sep<11>2014 09:16 Apr 04, 2023 Jkt 256165 PO 00000 Frm 00237 Fmt 8010 Sfmt 8010 Q:\40\256165.XXX PC31

suitable materials that will prevent exposure of the waste material to the atmosphere and will maintain the integrity of the cover and its closure devices throughout its intended service life.

Existing source or existing POTW means a POTW that commenced construction on or before December 1, 1998, and has not been reconstructed after December 1, 1998.

Fraction emitted means the fraction of the mass of HAP entering the POTW wastewater treatment plant which is emitted prior to secondary treatment.

Group 1 POTW means a POTW that accepts a waste stream regulated by another NESHAP and provides treatment and controls as an agent for the industrial user. The industrial user complies with its NESHAP by using the treatment and controls located at the POTW. For example, an industry discharges its benzene-containing waste stream to the POTW for treatment to comply with 40 CFR part 61, subpart FF—National Emission Standard for Benzene Waste Operations. This definition does not include POTW treating waste streams not specifically regulated under another NESHAP.

Group 2 POTW means a POTW that does not meet the definition of a Group 1 POTW. A Group 2 POTW can treat a waste stream that is either:

(1) Not specifically regulated by another NESHAP, or

(2) From an industrial user that complies with the specific wastewater requirements in their applicable NESHAP prior to discharging the waste stream to the POTW.

Industrial user means a nondomestic source introducing any pollutant or combination of pollutants into a POTW. Industrial users can be commercial or industrial facilities whose wastes enter local sewers.

New source or new POTW means any POTW that commenced construction or reconstruction after December 1, 1998.

Publicly owned treatment works (POTW) means a treatment works, as that term is defined by section 112(e)(5) of the Clean Air Act, which is owned by a municipality (as defined by section 502(4) of the Clean Water Act), a state, an intermunicipal or interstate agency, or any department, agency, or instrumentality of the federal government. This definition includes any intercepting sewers, outfall sewers, sewage collection systems, pumping, power, and other equipment. The wastewater treated by these facilities is generated by industrial, commercial, and domestic sources. As used in this subpart, the term POTW refers to both any publicly owned treatment works which is owned by a state, municipality, or intermunicipal or interstate agency and, therefore, eligible to receive grant assistance under the Subchapter II of the Clean Water Act, and any federally owned treatment works as that term is described in section 3023 of the Solid Waste Disposal Act.

POTW treatment plant means that portion of the POTW which is designed to provide treatment (including recycling and reclamation) of municipal sewage and industrial waste.

Secondary treatment means treatment processes, typically biological, designed to reduce the concentrations of dissolved and colloidal organic matter in wastewater.

Waste and wastewater means a material, or spent or used water or waste, generated from residential, industrial, commercial, mining, or agricultural operations or from community activities that contain dissolved or suspended matter, and that is discarded, discharged, or is being accumulated, stored, or physically, chemically, thermally, or biologically treated in a publicly owned treatment works.

TABLE 1 TO SUBPART VVV OF PART 63—APPLICABILITY OF 40 CFR PART 63 GENERAL PROVISIONS TO SUBPART VVV

General provisions reference	Applicable to subpart VVV	Explanation
§ 63.1		Applicability.
§ 63.1(a)(1)	Yes	Terms defined in the Clean Air Act.
§ 63.1(a)(2)	Yes	General applicability explanation.
§ 63.1(a)(3)	Yes	Cannot diminish a stricter NESHAP.

sfrattini on LAPJZKW1R2 with $$_JOB
VerDate Sep<11>2014 09:16 Apr 04, 2023 Jkt 256165 PO 00000 Frm 00238 Fmt 8010 Sfmt 8026 Q:\40\256165.XXX PC31

General provisions reference	Applicable to subpart VVV	Explanation
§ 63.1(a)(4)	Yes	Not repetitive. Doesn't apply to section 112(r).
§ 63.1(a)(5)	Yes	Section reserved.
§ 63.1(a)(6)–(8)	Yes	Contacts and authorities.
§ 63.1(a)(9)	Yes	Section reserved.
§ 63.1(a)(10)	Yes	Time period definition.
§ 63.1(a)(11)	Yes	Postmark explanation.
§ 63.1(a)(12)–(14)	Yes	Time period changes. Regulation conflict. Force and effect of subpart A.
§ 63.1(b)(1)	Yes	Initial applicability determination of subpart A.
§ 63.1(b)(2)	Yes	Section reserved.
§ 63.1(b)(3)	No	Subpart VVV specifies recordkeeping of records of applicability determination.
§ 63.1(c)(1)	Yes	Requires compliance with both subparts A and subpart VVV.
§ 63.1(c)(2)(i)	No	State options regarding title V permit. Unless required by the State, area sources subject to subpart VVV are exempted from permitting requirements.
§ 63.1(c)(2)(ii)–(iii)	No	State options regarding title V permit.
§ 63.1(c)(3)	Yes	Section reserved.
§ 63.1(c)(4)	Yes	Extension of compliance.
§ 63.1(c)(5)	No	Subpart VVV addresses area sources becoming major due to increase in emissions.
§ 63.1(c)(6)	Yes.	
§ 63.1(d)	Yes	Section reserved.
§ 63.1(e)	Yes	Title V permit before a relevant standard is established.
§ 63.2	Yes	Definitions.
§ 63.3	Yes	Units and abbreviations.
§ 63.4		Prohibited activities and circumvention.
§ 63.4(a)(1)–(3)	Yes	Prohibits operation in violation of subpart A.
§ 63.4(a)(4)	Yes	Section reserved.
§ 63.4(a)(5)	Yes	Compliance dates.
§ 63.4(b)	Yes	Circumvention.
§ 63.4(c)	Yes	Severability.
§ 63.5		Preconstruction review and notification requirements.
§ 63.5(a)(1)	Yes	Construction and reconstruction.
§ 63.5(a)(2)	Yes	New source—effective dates.
§ 63.5(b)(1)	Yes	New sources subject to relevant standards.
§ 63.5(b)(2)	Yes	Section reserved.
§ 63.5(b)(3)	Yes	No new major sources without Administrator approval.
§ 63.5(b)(4)	Yes	New major source notification.
§ 63.5(b)(5)	Yes	New major sources must comply.
§ 63.5(b)(6)	Yes	New equipment added considered part of major source.
§ 63.5(c)	Yes	Section reserved.
§ 63.5(d)(1)	Yes	Implementation of section 112(l)(2)—application of approval of new source construction.
§ 63.5(d)(2)	Yes	Application for approval of construction for new sources listing and describing planned air pollution control system.
§ 63.5(d)(3)	Yes	Application for reconstruction.
§ 63.5(d)(4)	Yes	Administrator may request additional information.
§ 63.5(e)	Yes	Approval of reconstruction.
§ 63.5(f)(1)	Yes	Approval based on State review.
§ 63.5(f)(2)	Yes	Application deadline.
§ 63.6		Compliance with standards and maintenance requirements.
§ 63.6(a)	Yes	Applicability of compliance with standards and maintenance requirements.
§ 63.6(b)	Yes	Compliance dates for new and reconstructed sources.
§ 63.6(c)	Yes	Compliance dates for existing sources apply to existing Group 1 POTW treatment plants.
§ 63.6(d)	Yes	Section reserved.
§ 63.6(e)	Yes, except as noted below	Operation and maintenance requirements apply to new sources.
§ 63.6(e)(1)(i)	No	General duty; See § 63.1583(d) and § 63.1586(d) for general duty requirements.
§ 63.6(e)(1)(ii)	No	Requirement to correct malfunctions.
§ 63.6(e)(3)	No	SSM plans are not required for POTW.
§ 63.6(f)	Yes, except as noted below	Compliance with non-opacity emission standards applies to new sources.
§ 63.6(f)(1)	No	The POTW standards apply at all times.
§ 63.6(g)	Yes	Use of alternative non-opacity emission standards applies to new sources.

sfrattini on LAPJZKW1R2 with $$_JOB
VerDate Sep<11>2014 09:16 Apr 04, 2023 Jkt 256165 PO 00000 Frm 00239 Fmt 8010 Sfmt 8026 Q:\40\256165.XXX PC31

General provisions reference	Applicable to subpart VVV	Explanation
§ 63.6(h)	No	POTW treatment plants do not typically have visible emissions.
§ 63.6(i)	Yes	Extension of compliance with emission standards applies to new sources.
§ 63.6(j)	Yes	Presidential exemption from compliance with emission standards.
§ 63.7		Performance testing requirements.
§ 63.7(a)	Yes	Performance testing is required for new sources.
§ 63.7(b)	Yes	New sources must notify the Administrator of intention to conduct performance testing.
§ 63.7(c)	Yes	New sources must comply with quality assurance program requirements.
§ 63.7(d)	Yes	New sources must provide performance testing facilities at the request of the Administrator.
§ 63.7(e)	Yes, except as noted below	Requirements for conducting performance tests apply to new sources.
§ 63.7(e)(1)	No	The performance testing provisions of § 63.694 for control devices are incorporated by reference into subpart DD of this part.
§ 63.7(f)	Yes	New sources may use an alternative test method.
§ 63.7(g)	Yes	Requirements for data analysis, recordkeeping, and reporting associated with performance testing apply to new sources.
§ 63.7(h)	Yes	New sources may request a waiver of performance tests.
§ 63.8		Monitoring requirements.
§ 63.8(a)	Yes	Applicability of monitoring requirements.
§ 63.8(b)	Yes	Monitoring shall be conducted by new sources.
§ 63.8(c)	Yes, except as noted below	New sources shall operate and maintain continuous monitoring systems (CMS).
§ 63.8(c)(1)(i)	No	See § 63.1583(d) for general duty requirement with respect to minimizing emissions and continuous monitoring requirements.
§ 63.8(c)(1)(iii)	No	See the applicable CMS quality control requirements under § 63.8(c) and (d).
§ 63.8(d)	Yes, except as noted below	New sources must develop and implement a CMS quality control program.
§ 63.8(d)(3)	No	The owner or operator must keep these written procedures on record for the life of the affected source or until the affected source is no longer subject to the provisions of this part, and make them available for inspection, upon request, by the Administrator. If the performance evaluation plan is revised, the owner or operator must keep previous (*i.e.,* superseded) versions of the performance evaluation plan on record to be made available for inspection, upon request, by the Administrator, for a period of 5 years after each revision of the plan. The program of corrective action should be included in the plan required under § 63.8(d)(2).
§ 63.8(e)	Yes	New sources may be required to conduct a performance evaluation of CMS.
§ 63.8(f)	Yes	New sources may use an alternative monitoring method.
§ 63.8(g)	Yes	Requirements for reduction of monitoring data.
§ 63.9		Notification requirements.
§ 63.9(a)	Yes	Applicability of notification requirements.
§ 63.9(b)	Yes, except as noted below	Initial notification due February 23, 2000 or 60 days after becoming subject to this subpart.
§ 63.9(c)	Yes	Request for extension of compliance with subpart VVV.
§ 63.9(d)	Yes	Notification that source is subject to special compliance requirements as specified in § 63.6(b)(3) and (4).
§ 63.9(e)	Yes	Notification of performance test.
§ 63.9(f)	No	POTW treatment plants do not typically have visible emissions.
§ 63.9(g)	Yes	Additional notification requirements for sources with continuous emission monitoring systems.
§ 63.9(h)	Yes, except as noted	Notification of compliance status when the source becomes subject to subpart VVV. See exceptions in § 63.1591(b).
§ 63.9(i)	Yes	Adjustments to time periods or postmark deadlines or submittal and review of required communications.

sfrattini on LAPJZKW1R2 with $$_JOB
VerDate Sep<11>2014 09:16 Apr 04, 2023 Jkt 256165 PO 00000 Frm 00240 Fmt 8010 Sfmt 8026 Q:\40\256165.XXX PC31

General provisions reference	Applicable to subpart VVV	Explanation
§ 63.9(j)	Yes	Change of information already provided to the Administrator.
§ 63.9(k)	Yes	Only as specified in § 63.9(j).
§ 63.10		Recordkeeping and reporting requirements.
§ 63.10(a)	Yes	Applicability of notification and reporting requirements.
§ 63.10(b)(1)–(2)	Yes, except as noted below	General recordkeeping requirements.
§ 63.10(b)(2)(i)	No	Recordkeeping for occurrence and duration of startup and shutdown.
§ 63.10(b)(2)(ii)	No	Recordkeeping for failure to meet a standard, see § 63.696.
§ 63.10(b)(2)(iii)	Yes	Maintenance records.
§ 63.10(b)(2)(iv)	No	Actions taken to minimize emissions during SSM.
§ 63.10(b)(2)(v)	No	Action taken to minimize emissions during SSM.
§ 63.10(b)(2)(vi)	Yes	Recordkeeping for CMS malfunctions.
§ 63.10(b)(2)(vii)–(ix)	Yes	Other CMS requirements.
§ 63.10(b)(3)	No	Recording requirement for applicability determination.
§ 63.10(c)	Yes, except as noted below	Additional recordkeeping requirements for sources with continuous monitoring systems.
§ 63.10(c)(7)	No	See § 63.696(h) for recordkeeping of (1) date, time, and duration; (2) listing of affected source or equipment, and an estimate of the tons per year of each regulated pollutant emitted over the standard; and (3) actions to minimize emissions and correct the failure.
§ 63.10(c)(8)	No	See § 63.696(h) for recordkeeping of (1) date, time, and duration; (2) listing of affected source or equipment, and an estimate of the tons per year of each regulated pollutant emitted over the standard; and (3) actions to minimize emissions and correct the failure.
§ 63.10(c)(15)	No	Use of SSM plan.
§ 63.10(d)	Yes, except as noted below	General reporting requirements.
§ 63.10(d)(5)	No	See § 63.697(b) for malfunction reporting requirements.
§ 63.10(e)	Yes	Additional reporting requirements for sources with continuous monitoring systems.
§ 63.10(f)	Yes, except as noted	Waiver of recordkeeping and reporting requirements. Electronic reporting to the EPA cannot be waived.
§ 63.11	Yes	Control device and equipment leak work practice requirements.
§ 63.11(a) and (b)	Yes	If a new source uses flares to comply with the requirements of subpart VVV, the requirements of § 63.11 apply.
§ 63.11(c), (d) and (e)	Yes	Alternative work practice for equipment leaks.
§ 63.12	Yes	State authority and designation.
§ 63.13	Yes	Addresses of State air pollution control agencies and EPA Regional Offices.
§ 63.14	Yes	Incorporation by reference.
§ 63.15	Yes	Availability of information and confidentiality.

[82 FR 49525, Oct. 26, 2017, as amended at 85 FR 73902, Nov. 19, 2020]

TABLE 2 TO SUBPART VVV OF PART 63—COMPLIANCE DATES AND REQUIREMENTS

If the construction/reconstruction date is	Then the owner or operator must comply with	And the owner or operator must achieve compliance
Group 1 POTW:		
(1) After December 27, 2016	(i) New source requirements in §§ 63.1583(b); 63.1586(b) or (c); and 63.1588 through 63.1591.	Upon initial startup.
(2) After December 1, 1998 but on or before December 27, 2016.	(i) New source requirements in § 63.1583(b) but instead of complying with both requirements (industrial user(s) NESHAP and the POTW standards in §§ 63.1586(b) or (c)), you must comply with the most stringent requirement[1].	Upon initial startup through October 26, 2020.
	(ii) New source requirements in §§ 63.1586(b) or (c); and 63.1588 through 63.1591.	On or before October 26, 2020.
(3) On or before December 1, 1998.	(i) Existing source requirements in §§ 63.1583(a)	By the compliance date specified in the other applicable NESHAP.
	(ii) Existing source requirements in §§ 63.1588 through 63.1591.	On or before October 26, 2018.
Group 2 POTW:		

sfrattini on LAPJZKW1R2 with $$_JOB
VerDate Sep<11>2014 09:16 Apr 04, 2023 Jkt 256165 PO 00000 Frm 00241 Fmt 8010 Sfmt 8026 Q:\40\256165.XXX PC31

If the construction/reconstruction date is	Then the owner or operator must comply with	And the owner or operator must achieve compliance
(4) After December 27, 2016 ...	(i) New source requirements in §§ 63.1586(b) or (c); and 63.1588 through 63.1591.	Upon initial startup.
(5) After December 1, 1998 but on or before December 27, 2016.	(i) New source requirements in § 63.1586(b) or (c)[1]	Upon initial startup through October 26, 2020.
	(ii) New source requirements in §§ 63.1586(b) or (c); and 63.1588 through 63.1591.	On or before October 26, 2020.
(6) On or before December 1, 1998.	(i) Existing source requirements in §§ 63.1586(a); and 63.1591(a).	On or before October 26, 2018.

[1] Note: This represents the new source requirements in the original 1999 NESHAP, which are applicable until October 26, 2020. Between October 26, 2017 and October 26, 2020, you must transition to the new requirements in Table 2 (2)(ii) and (5)(ii) for Group 1 and Group 2 POTW, respectively.

Subpart WWW [Reserved]

Subpart XXX—National Emission Standards for Hazardous Air Pollutants for Ferroalloys Production: Ferromanganese and Silicomanganese

SOURCE: 64 FR 27458, May 20, 1999, unless otherwise noted.

§ 63.1620 Am I subject to this subpart?

(a) You are subject to this subpart if you own or operate a new or existing ferromanganese and/or silicomanganese production facility that is a major source or is co-located at a major source of hazardous air pollutant emissions.

(b) You are subject to this subpart if you own or operate any of the following equipment as part of a ferromanganese and/or silicomanganese production facility:

(1) Electric arc furnace;

(2) Casting operations;

(3) Metal oxygen refining (MOR) process;

(4) Crushing and screening operations;

(5) Outdoor fugitive dust sources.

(c) A new affected source is any of the equipment listed in paragraph (b) of this section for which construction or reconstruction commenced after June 30, 2015.

(d) Table 1 of this subpart specifies the provisions of subpart A of this part that apply to owners and operators of ferromanganese and silicomanganese production facilities subject to this subpart.

(e) If you are subject to the provisions of this subpart, you are also subject to title V permitting requirements under 40 CFR part 70 or 71, as applicable.

(f) Emission standards in this subpart apply at all times.

[80 FR 37390, June 30, 2015]

§ 63.1621 What are my compliance dates?

(a) Existing affected sources must be in compliance with the provisions specified in §§ 63.1620 through 63.1629 no later than June 30, 2017.

(b) Affected sources in existence prior to June 30, 2015 must be in compliance with the provisions specified in §§ 63.1650 through 63.1661 by November 21, 2001 and until June 30, 2017. As of June 30, 2017, the provisions of §§ 63.1650 through 63.1661 cease to apply to affected sources in existence prior to June 30, 2015. The provisions of §§ 63.1650 through 63.1661 remain enforceable at a source for its activities prior to June 30, 2017.

(c) If you own or operate a new affected source that commences construction or reconstruction after November 23, 2011, you must comply with the requirements of this subpart by June 30, 2015, or upon startup of operations, whichever is later.

[80 FR 37390, June 30, 2015]

§ 63.1622 What definitions apply to this subpart?

Terms in this subpart are defined in the Clean Air Act (Act), in subpart A of this part, or in this section as follows:

Bag leak detection system means a system that is capable of continuously monitoring particulate matter (dust) loadings in the exhaust of a baghouse in order to detect bag leaks and other

sfrattini on LAPJZKW1R2 with $$_JOB
VerDate Sep<11>2014 09:16 Apr 04, 2023 Jkt 256165 PO 00000 Frm 00242 Fmt 8010 Sfmt 8010 Q:\40\256165.XXX PC31

upset conditions. A bag leak detection system includes, but is not limited to, an instrument that operates on triboelectric, light scattering, light transmittance, or other effect to continuously monitor relative particulate matter loadings.

Capture system means the collection of components used to capture the gases and fumes released from one or more emissions points and then convey the captured gas stream to a control device or to the atmosphere. A capture system may include, but is not limited to, the following components as applicable to a given capture system design: Duct intake devices, hoods, enclosures, ductwork, dampers, manifolds, plenums, fans and roofline ventilation systems.

Casting means the period of time from when molten ferroalloy is removed from the tapping station until the pouring into casting molds or beds is completed. This includes the following operations: Pouring alloy from one ladle to another, slag separation, slag removal and ladle transfer by crane, truck, or other conveyance.

Crushing and screening equipment means the crushers, grinders, mills, screens and conveying systems used to crush, size and prepare for packing manganese-containing materials, including raw materials, intermediate products and final products.

Electric arc furnace means any furnace where electrical energy is converted to heat energy by transmission of current between electrodes partially submerged in the furnace charge. The furnace may be of an open, semi-sealed, or sealed design.

Furnace process cycle means the period in which the furnace is tapped to the time in which the furnace is tapped again and includes periods of charging, smelting, tapping, casting and ladle raking. For multiple furnaces operating within a single shop building, furnace process cycle means a period sufficient to capture a full cycle of charging, smelting, tapping, casting and ladle raking for each furnace within the shop building.

Ladle treatment means a post-tapping process including metal and alloy additions where chemistry adjustments are made in the ladle after furnace smelting to achieve a specified product.

Local ventilation means hoods, ductwork, and fans designed to capture process fugitive emissions close to the area where the emissions are generated (*e.g.*, tap hoods).

Metal oxygen refining (MOR) process means the reduction of the carbon content of ferromanganese through the use of oxygen.

Outdoor fugitive dust source means a stationary source from which hazardous air pollutant-bearing particles are discharged to the atmosphere due to wind or mechanical inducement such as vehicle traffic. Fugitive dust sources include plant roadways, yard areas and outdoor material storage and transfer operation areas.

Plant roadway means any area at a ferromanganese and silicomanganese production facility that is subject to plant mobile equipment, such as forklifts, front end loaders, or trucks, carrying manganese-bearing materials. Excluded from this definition are employee and visitor parking areas, provided they are not subject to traffic by plant mobile equipment.

Process fugitive emissions source means a source of hazardous air pollutant emissions that is associated with a ferromanganese or silicomanganese production facility and is not a fugitive dust source or a stack emissions source. Process fugitive sources include emissions that escape capture from the electric arc furnace, tapping operations, casting operations, ladle treatment, MOR or crushing and screening equipment.

Roofline ventilation system means an exhaust system designed to evacuate process fugitive emissions that collect in the roofline area to a control device.

Shop building means the building which houses one or more electric arc furnaces or other processes that generate process fugitive emissions.

Shutdown means the cessation of operation of an affected source for any purpose.

Startup means the setting in operation of an affected source for any purpose.

Tapping emissions means the gases and emissions associated with removal

sfrattini on LAPJZKW1R2 with $$_JOB
VerDate Sep<11>2014 09:16 Apr 04, 2023 Jkt 256165 PO 00000 Frm 00243 Fmt 8010 Sfmt 8010 Q:\40\256165.XXX PC31

of product from the electric arc furnace under normal operating conditions, such as removal of metal under normal pressure and movement by gravity down the spout into the ladle and filling the ladle.

Tapping period means the time from when a tap hole is opened until the time a tap hole is closed.

[80 FR 37390, June 30, 2015]

§ 63.1623 What are the emissions standards for new, reconstructed and existing facilities?

(a) *Electric arc furnaces*. You must install, operate and maintain an effective capture system that collects the emissions from each electric arc furnace operation and conveys the collected emissions to a control device for the removal of the pollutants specified in the emissions standards specified in paragraphs (a)(1) through (5) of this section.

(1) *Particulate matter emissions*. (i) You must not discharge exhaust gases from each electric arc furnace operation containing particulate matter in excess of 4.0 milligrams per dry standard cubic meter (mg/dscm) into the atmosphere from any new or reconstructed electric arc furnace.

(ii) You must not discharge exhaust gases from each electric arc furnace operation containing particulate matter in excess of 25 mg/dscm into the atmosphere from any existing electric arc furnace.

(2) *Mercury emissions*. (i) You must not discharge exhaust gases from each electric arc furnace operation containing mercury emissions in excess of 13 micrograms per dry standard cubic meter (μg/dscm) into the atmosphere from any new or reconstructed electric arc furnace when producing ferromanganese.

(ii) You must not discharge exhaust gases from each electric arc furnace operation containing mercury emissions in excess of 130 μg/dscm into the atmosphere from any existing electric arc furnace when producing ferromanganese.

(iii) You must not discharge exhaust gases from each electric arc furnace operation containing mercury emissions in excess of 4 μg/dscm into the atmosphere from any new or reconstructed electric arc furnace when producing silicomanganese.

(iv) You must not discharge exhaust gases from each electric arc furnace operation containing mercury emissions in excess of 12 μg/dscm into the atmosphere from any existing electric arc furnace when producing silicomanganese.

(3) *Polycyclic aromatic hydrocarbon emissions*. (i) You must not discharge exhaust gases from each electric arc furnace operation containing polycyclic aromatic hydrocarbon emissions in excess of 12,000 μg/dscm into the atmosphere from any new or reconstructed electric arc furnace when producing ferromanganese.

(ii) You must not discharge exhaust gases from each electric arc furnace operation containing polycyclic aromatic hydrocarbon emissions in excess of 12,000 μg/dscm into the atmosphere from any existing electric arc furnace when producing ferromanganese.

(iii) You must not discharge exhaust gases from each electric arc furnace operation containing polycyclic aromatic hydrocarbon emissions in excess of 72 μg/dscm into the atmosphere from any new or reconstructed electric arc furnace when producing silicomanganese.

(iv) You must not discharge exhaust gases from each electric arc furnace operation containing polycyclic aromatic hydrocarbon emissions in excess of 130 μg/dscm into the atmosphere from any existing electric arc furnace when producing silicomanganese.

(4) *Hydrochloric acid emissions*. (i) You must not discharge exhaust gases from each electric arc furnace operation containing hydrochloric acid emissions in excess of 180 μg/dscm into the atmosphere from any new or reconstructed electric arc furnace.

(ii) You must not discharge exhaust gases from each electric arc furnace operation containing hydrochloric acid emissions in excess of 1,100 μg/dscm into the atmosphere from any existing electric arc furnace.

(5) *Formaldehyde emissions*. You must not discharge exhaust gases from each electric arc furnace operation containing formaldehyde emissions in excess of 201 μg/dscm into the atmosphere

sfrattini on LAPJZKW1R2 with $$_JOB
VerDate Sep<11>2014 09:16 Apr 04, 2023 Jkt 256165 PO 00000 Frm 00244 Fmt 8010 Sfmt 8010 Q:\40\256165.XXX PC31

from any new, reconstructed or existing electric arc furnace.

(b) *Process fugitive emissions.* (1) You must install, operate and maintain a capture system that is designed to collect 95 percent or more of the emissions from process fugitive emissions sources and convey the collected emissions to a control device that is demonstrated to meet the applicable emission limit specified in paragraph (a)(1) or (c) of this section.

(2) The determination of the overall capture must be demonstrated as required by §63.1624(a).

(3) Unless you meet the criteria of paragragh (b)(3)(iii) of this section, you must not cause the emissions exiting from a shop building to exceed an average of 8 percent opacity over a furnace or MOR process cycle.

(i) This 8 percent opacity requirement is determined by averaging the individual opacity readings observed during the furnace or MOR process cycle.

(ii) An individual opacity reading shall be determined as the average of 24 consecutive images recorded at 15-second intervals with the opacity values from each individual digital image rounded to the nearest 5 percent.

(iii) If the average opacity from the shop building is greater than 8 percent opacity during an observed furnace or MOR process cycle, the opacity of two more additional furnace or MOR process cycles must be observed within 7 days and the average of the individual opacity readings during the three observation periods must be less than 8 percent opacity.

(iv) At no time during operation may the average of any two consecutive individual opacity readings be greater than 20 percent opacity.

(c) *Local ventilation emissions.* If you operate local ventilation to capture tapping, casting, or ladle treatment emissions and direct them to a control device other than one associated with the electric arc furnace, you must not discharge into the atmosphere any captured emissions containing particulate matter in excess of 4.0 mg/dscm.

(d) *MOR process.* You must not discharge into the atmosphere from any new, reconstructed or existing MOR process exhaust gases containing particulate matter in excess of 3.9 mg/dscm.

(e) *Crushing and screening equipment.* You must not discharge into the atmosphere from any new, reconstructed, or existing piece of equipment associated with crushing and screening exhaust gases containing particulate matter in excess of 13 mg/dscm.

(f) At all times, you must operate and maintain any affected source, including associated air pollution control equipment and monitoring equipment, in a manner consistent with safety and good air pollution control practices for minimizing emissions. Determination of whether such operation and maintenance procedures are being used will be based on information available to the Administrator that may include, but is not limited to, monitoring results, review of operation and maintenance procedures, review of operation and maintenance records and inspection of the source.

[80 FR 37390, June 30, 2015]

§63.1624 What are the operational and work practice standards for new, reconstructed, and existing facilities?

(a) *Process fugitive emissions sources.* (1) You must prepare, and at all times operate according to, a process fugitive emissions ventilation plan that documents the equipment and operations designed to effectively capture process fugitive emissions. The plan will be deemed to achieve effective capture if it consists of the following elements:

(i) Documentation of engineered hoods and secondary fugitive capture systems designed according to the most recent, at the time of construction, ventilation design principles recommended by the American Conference of Governmental Industrial Hygienists (ACGIH). The process fugitive emissions capture systems must be designed to achieve sufficient air changes to evacuate the collection area frequently enough to ensure process fugitive emissions are effectively collected by the ventilation system and ducted to the control device(s). The required ventilation systems should also use properly positioned hooding to take advantage of the inherent air flows of the source and capture systems that minimize air

sfrattini on LAPJZKW1R2 with $$_JOB
VerDate Sep<11>2014 09:16 Apr 04, 2023 Jkt 256165 PO 00000 Frm 00245 Fmt 8010 Sfmt 8010 Q:\40\256165.XXX PC31

flows while also intercepting natural air flows or creating air flows to contain the fugitive emissions. Include a schematic for each building indicating duct sizes and locations, hood sizes and locations, control device types, size and locations and exhaust locations. The design plan must identify the key operating parameters and measurement locations to ensure proper operation of the system and establish monitoring parameter values that reflect effective capture.

(ii) List of critical maintenance actions and the schedule to conduct them.

(2) You must submit a copy of the process fugitive emissions ventilation plan to the designated permitting authority on or before the applicable compliance date for the affected source as specified in § 63.1621 in electronic format and whenever an update is made to the plan. The requirement for you to operate the facility according to the written process fugitives ventilation plan and specifications must be incorporated in the operating permit for the facility that is issued by the designated permitting authority under part 70 or 71 of this chapter, as applicable.

(3) You must update the information required in paragraphs (a)(1) and (2) of this section every 5 years or whenever there is a significant change in variables that affect process fugitives ventilation design such as the addition of a new process.

(b) *Outdoor fugitive dust sources.* (1) You must prepare, and at all times operate according to, an outdoor fugitive dust control plan that describes in detail the measures that will be put in place to control outdoor fugitive dust emissions from the individual fugitive dust sources at the facility.

(2) You must submit a copy of the outdoor fugitive dust control plan to the designated permitting authority on or before the applicable compliance date for the affected source as specified in § 63.1621. The requirement for you to operate the facility according to a written outdoor fugitive dust control plan must be incorporated in the operating permit for the facility that is issued by the designated permitting authority under part 70 or 71 of this chapter, as applicable.

(3) You may use existing manuals that describe the measures in place to control outdoor fugitive dust sources required as part of a state implementation plan or other federally enforceable requirement for particulate matter to satisfy the requirements of paragraph (b)(1) of this section.

[80 FR 37390, June 30, 2015]

§ 63.1625 What are the performance test and compliance requirements for new, reconstructed, and existing facilities?

(a) *Performance testing.* (1) All performance tests must be conducted according to the requirements in § 63.7.

(2) Each performance test in paragraphs (c)(1) and (2) of this section must consist of three separate and complete runs using the applicable test methods.

(3) Each run must be conducted under conditions that are representative of normal process operations.

(4) Performance tests conducted on air pollution control devices serving electric arc furnaces must be conducted such that at least one tapping period, or at least 20 minutes of a tapping period, whichever is less, is included in at least two of the three runs. The sampling time for each run must be at least three times the average tapping period of the tested furnace, but no less than 60 minutes.

(5) You must conduct the performance tests specified in paragraph (c) of this section under such conditions as the Administrator specifies based on representative performance of the affected source for the period being tested. Upon request, you must make available to the Administrator such records as may be necessary to determine the conditions of performance tests.

(b) *Test methods.* The following test methods in appendices of part 60 or 63 of this chapter or as specified elsewhere must be used to determine compliance with the emission standards.

(1) Method 1 of appendix A–1 of 40 CFR part 60 to select the sampling port location and the number of traverse points.

(2) Method 2 of appendix A–1 of 40 CFR part 60 to determine the volumetric flow rate of the stack gas.

sfrattini on LAPJZKW1R2 with $$_JOB
VerDate Sep<11>2014 09:16 Apr 04, 2023 Jkt 256165 PO 00000 Frm 00246 Fmt 8010 Sfmt 8010 Q:\40\256165.XXX PC31

(3)(i) Method 3A or 3B of appendix A–2 of 40 CFR part 60 (with integrated bag sampling) to determine the outlet stack and inlet oxygen and CO_2 content.

(ii) You must measure CO_2 concentrations at both the inlet and outlet of the positive pressure fabric filter in conjunction with the pollutant sampling in order to determine isokinetic sampling rates.

(iii) As an alternative to EPA Reference Method 3B, ASME PTC–19–10–1981–Part 10 may be used (incorporated by reference, see §63.14).

(4) Method 4 of appendix A–3 of 40 CFR part 60 to determine the moisture content of the stack gas.

(5)(i) Method 5 of appendix A–3 of 40 CFR part 60 to determine the particulate matter concentration of the stack gas for negative pressure baghouses and positive pressure baghouses with stacks.

(ii) Method 5D of appendix A–3 of 40 CFR part 60 to determine particulate matter concentration and volumetric flow rate of the stack gas for positive pressure baghouses without stacks.

(iii) The sample volume for each run must be a minimum of 4.0 cubic meters (141.2 cubic feet). For Method 5 testing only, you may choose to collect less than 4.0 cubic meters per run provided that the filterable mass collected (*i.e.*, net filter mass plus mass of nozzle, probe and filter holder rinses) is equal to or greater than 10 mg. If the total mass collected for two of three of the runs is less than 10 mg, you must conduct at least one additional test run that produces at least 10 mg of filterable mass collected (*i.e.*, at a greater sample volume). Report the results of all test runs.

(6) Method 30B of appendix A–8 of 40 CFR part 60 to measure mercury. Apply the minimum sample volume determination procedures as per the method.

(7)(i) Method 26A of appendix A–8 of 40 CFR part 60 to determine outlet stack or inlet hydrochloric acid concentration.

(ii) Collect a minimum volume of 2 cubic meters.

(8)(i) Method 316 of appendix A of this part to determine outlet stack or inlet formaldehyde.

(ii) Collect a minimum volume of 1.0 cubic meter.

(9) ASTM D7520–16 to determine opacity (incorporated by reference, see §63.14) with the following conditions:

(i) During the digital camera opacity technique (DCOT) certification procedure outlined in Section 9.2 of ASTM D7520–16, you or the DCOT vendor must present the plumes in front of various backgrounds of color and contrast representing conditions anticipated during field use such as blue sky, trees and mixed backgrounds (clouds and/or a sparse tree stand).

(ii) You must have standard operating procedures in place including daily or other frequency quality checks to ensure the equipment is within manufacturing specifications as outlined in Section 8.1 of ASTM D7520–16.

(iii) You must follow the recordkeeping procedures outlined in §63.10(b)(1) for the DCOT certification, compliance report, data sheets and all raw unaltered JPEGs used for opacity and certification determination.

(iv) You or the DCOT vendor must have a minimum of four (4) independent technology users apply the software to determine the visible opacity of the 300 certification plumes. For each set of 25 plumes, the user may not exceed 20 percent opacity for any one reading and the average error must not exceed 7.5 percent opacity.

(v) Use of this method does not provide or imply a certification or validation of any vendor's hardware or software. The onus to maintain and verify the certification and/or training of the DCOT camera, software and operator in accordance with ASTM D7520–16 and these requirements is on the facility, DCOT operator and DCOT vendor.

(10) California Air Resources Board (CARB) Method 429 (incorporated by reference, see §63.14).

(11) The owner or operator may use alternative measurement methods approved by the Administrator following the procedures described in §63.7(f).

(c) *Compliance demonstration with the emission standards*—(1) *Initial performance test.* You must conduct an initial performance test for air pollution control devices or vent stacks subject to §63.1623(a), (b)(1), and (c) through (e) to

sfrattini on LAPJZKW1R2 with $$_JOB
VerDate Sep<11>2014 09:16 Apr 04, 2023 Jkt 256165 PO 00000 Frm 00247 Fmt 8010 Sfmt 8010 Q:\40\256165.XXX PC31

demonstrate compliance with the applicable emission standards.

(2) *Periodic performance test.* (i) You must conduct annual particulate matter tests for wet scrubber air pollution control devices subject to § 63.1623(a)(1) to demonstrate compliance with the applicable emission standards.

(ii) You must conduct particulate matter tests every 5 years for fabric filter air pollution control devices subject to § 63.1623(a)(1) to demonstrate compliance with the applicable emission standards.

(iii) You must conduct annual mercury performance tests for wet scrubber and fabric filter air pollution control devices or vent stacks subject to § 63.1623(a)(2) to demonstrate compliance with the applicable emission standards.

(iv) You must conduct PAH performance tests for wet scrubber and fabric filter air pollution control devices or vent stacks subject to § 63.1623(a)(3) to demonstrate compliance with the applicable emission standards.

(A) For furnaces producing silicomanganese, you must conduct a PAH performance test every 5 years for each furnace that produces silicomanganese subject to § 63.1623(a)(3).

(B) For furnaces producing ferromanganese, you must conduct a PAH performance test every 3 months or 2,190 cumulative hours of ferromanganese production for each furnace subject to § 63.1623(a)(3).

(C) If a furnace producing ferromanganese demonstrates compliance with four consecutive PAH tests, the owner/operator may petition the permitting authority to request reduced frequency of testing to demonstrate compliance with the PAH emission standards. However, this PAH compliance testing cannot be reduced to less than once per year.

(v) You must conduct ongoing performance tests every 5 years for air pollution control devices or vent stacks subject to § 63.1623(a)(4), (a)(5), (b)(1), and (c) through (e) to demonstrate compliance with the applicable emission standards.

(3) Compliance is demonstrated for all sources performing emissions tests if the average concentration for the three runs comprising the performance test does not exceed the standard.

(4) *Operating limits.* You must establish parameter operating limits according to paragraphs (c)(4)(i) through (iv) of this section. Unless otherwise specified, compliance with each established operating limit shall be demonstrated for each 24-hour operating day.

(i) For a wet particulate matter scrubber, you must establish the minimum liquid flow rate and pressure drop as your operating limits during the three-run performance test. If you use a wet particulate matter scrubber and you conduct separate performance tests for particulate matter, you must establish one set of minimum liquid flow rate and pressure drop operating limits. If you conduct multiple performance tests, you must set the minimum liquid flow rate and pressure drop operating limits at the highest minimum hourly average values established during the performance tests.

(ii) For a wet acid gas scrubber, you must establish the minimum liquid flow rate and pH, as your operating limits during the three-run performance test. If you use a wet acid gas scrubber and you conduct separate performance tests for hydrochloric acid, you must establish one set of minimum liquid flow rate and pH operating limits. If you conduct multiple performance tests, you must set the minimum liquid flow rate and pH operating limits at the highest minimum hourly average values established during the performance tests.

(iii) For emission sources with fabric filters that choose to demonstrate continuous compliance through bag leak detection systems you must install a bag leak detection system according to the requirements in § 63.1626(d) and you must set your operating limit such that the sum duration of bag leak detection system alarms does not exceed 5 percent of the process operating time during a 6-month period.

(iv) If you choose to demonstrate continuous compliance through a particulate matter CEMS, you must determine an operating limit (particulate matter concentration in mg/dscm) during performance testing for initial particulate matter compliance. The operating limit will be the average of the

sfrattini on LAPJZKW1R2 with $$_JOB
VerDate Sep<11>2014 09:16 Apr 04, 2023 Jkt 256165 PO 00000 Frm 00248 Fmt 8010 Sfmt 8010 Q:\40\256165.XXX PC31

PM filterable results of the three Method 5 or Method 5D of appendix A–3 of 40 CFR part 60 performance test runs. To determine continuous compliance, the hourly average PM concentrations will be averaged on a rolling 30 operating day basis. Each 30 operating day average will have to meet the PM operating limit.

(d) *Compliance demonstration with shop building opacity standards.* (1)(i) If you are subject to §63.1623(b), you must conduct opacity observations of the shop building to demonstrate compliance with the applicable opacity standards according to §63.6(h)(5), which addresses conducting opacity or visible emission observations.

(ii) You must conduct the opacity observations according to ASTM D7520–16 (incorporated by reference, see §63.14), for a period that includes at least one complete furnace process cycle for each furnace.

(iii) For a shop building that contains more than one furnace, you must conduct the opacity observations according to ASTM D7520–16 for a period that includes one tapping period from each furnace located in the shop building.

(iv) You must conduct the opacity observations according to ASTM D7520–16 for a 1-hour period that includes at least one pouring for each MOR located in the shop building.

(v) You must conduct the opacity observations at least once per week for each shop building containing one or more furnaces or MOR.

(vi) You may reduce the frequency of observations to once per month for each shop building that demonstrates compliance with the weekly 8-percent opacity limit for 26 consecutive complete observations that span a period of at least 26 weeks. Any monthly observation in excess of 8-percent opacity will return that shop building opacity observation to a weekly compliance schedule. You may reduce the frequency of observations again to once per month for each shop building that demonstrates compliance with the weekly 8-percent opacity limit after another 26 consecutive complete observations that span a period of at least 26 weeks.

(2) You must determine shop building opacity operating parameters based on either monitoring data collected during the compliance demonstration or established in an engineering assessment.

(i) If you choose to establish parameters based on the initial compliance demonstration, you must simultaneously monitor parameter values for one of the following: The capture system fan motor amperes and all capture system damper positions, the total volumetric flow rate to the air pollution control device and all capture system damper positions, or volumetric flow rate through each separately ducted hood that comprises the capture system. Subsequently you must monitor these parameters according to §63.1626(g) and ensure they remain within 10 percent of the value recorded during the compliant opacity readings.

(ii) If you choose to establish parameters based on an engineering assessment, then a design analysis shall include, for example, specifications, drawings, schematics and ventilation system diagrams prepared by the owner or operator or capture or control system manufacturer or vendor that describes the shop building opacity system ventilation design based on acceptable engineering texts. The design analysis shall address vent stream characteristics and ventilation system design operating parameters such as fan amps, damper position, flow rate and/or other specified parameters.

(iii) You may petition the Administrator to reestablish these parameter ranges whenever you can demonstrate to the Administrator's satisfaction that the electric arc furnace or MOR operating conditions upon which the parameter ranges were previously established are no longer applicable. The values of these parameter ranges determined during the most recent demonstration of compliance must be maintained at the appropriate level for each applicable period.

(3) You will demonstrate continuing compliance with the opacity standards by following the monitoring requirements specified in §63.1626(g) and the reporting and recordkeeping requirements specified in §63.1628(b)(5).

sfrattini on LAPJZKW1R2 with $$_JOB
VerDate Sep<11>2014 09:16 Apr 04, 2023 Jkt 256165 PO 00000 Frm 00249 Fmt 8010 Sfmt 8010 Q:\40\256165.XXX PC31

(e) *Compliance demonstration with the operational and work practice standards*—(1) *Process fugitive emissions sources.* You will demonstrate compliance by developing and maintaining a process fugitives ventilation plan, by reporting any deviations from the plan and by taking necessary corrective actions to correct deviations or deficiencies.

(2) *Outdoor fugitive dust sources.* You will demonstrate compliance by developing and maintaining an outdoor fugitive dust control plan, by reporting any deviations from the plan and by taking necessary corrective actions to correct deviations or deficiencies.

(3) *Baghouses equipped with bag leak detection systems.* You will demonstrate compliance with the bag leak detection system requirements by developing an analysis and supporting documentation demonstrating conformance with EPA guidance and specifications for bag leak detection systems in § 60.57c(h) of this chapter.

[80 FR 37390, June 30, 2015, as amended at 82 FR 5408, Jan. 18, 2017]

§ 63.1626 What monitoring requirements must I meet?

(a) *Baghouse monitoring.* You must prepare, and at all times operate according to, a standard operating procedures manual that describes in detail procedures for inspection, maintenance and bag leak detection and corrective action plans for all baghouses (fabric filters or cartridge filters) that are used to control process vents, process fugitive, or outdoor fugitive dust emissions from any source subject to the emissions standards in § 63.1623.

(b) You must submit the standard operating procedures manual for baghouses required by paragraph (a) of this section to the Administrator or delegated authority for review and approval.

(c) For an existing positive pressure baghouse used to control emissions from an electric arc furnace that is not equipped with a bag leak detection system, you must specify in the standard operating procedures manual for inspections and routine maintenance, at a minimum, the requirements of paragraphs (c)(1) and (2) of this section.

(1) You must visually inspect the outlet of each baghouse using Method 22 on a twice daily basis (at least 4 hours apart) for evidence of any visible emissions indicating abnormal operations and must initiate corrective actions within 1 hour of any visible emissions that indicates abnormal operation. Corrective actions shall include, at a minimum, isolating, shutting down and conducting an internal inspection of the baghouse compartment that is the source of the visible emissions that indicate abnormal operations.

(2) In addition to the daily visible emissions observation, you must conduct the following activities:

(i) Weekly confirmation that dust is being removed from hoppers through visual inspection, or equivalent means of ensuring the proper functioning of removal mechanisms.

(ii) Daily check of compressed air supply for pulse-jet baghouses.

(iii) An appropriate methodology for monitoring cleaning cycles to ensure proper operation.

(iv) Monthly check of bag cleaning mechanisms for proper functioning through visual inspection or equivalent means.

(v) Quarterly visual check of bag tension on reverse air and shaker-type baghouses to ensure that the bags are not kinked (kneed or bent) or lying on their sides. Such checks are not required for shaker-type baghouses using self-tensioning (spring loaded) devices.

(vi) Quarterly confirmation of the physical integrity of the baghouse structure through visual inspection of the baghouse interior for air leaks.

(vii) Semiannual inspection of fans for wear, material buildup and corrosion through visual inspection, vibration detectors, or equivalent means.

(d) For all other non-furnace baghouses that are not equipped with bag leak detection or CEMS, the procedures that you specify in the standard operating procedures manual for inspections and routine maintenance must, at a minimum, include the requirements of paragraphs (d)(1) and (2) of this section.

(1) You must observe the baghouse outlet on a daily basis for the presence of any visible emissions.

sfrattini on LAPJZKW1R2 with $$_JOB
VerDate Sep<11>2014 09:16 Apr 04, 2023 Jkt 256165 PO 00000 Frm 00250 Fmt 8010 Sfmt 8010 Q:\40\256165.XXX PC31

(2) In addition to the daily visible emissions observation, you must conduct the following activities:

(i) Weekly confirmation that dust is being removed from hoppers through visual inspection, or equivalent means of ensuring the proper functioning of removal mechanisms.

(ii) Daily check of compressed air supply for pulse-jet baghouses.

(iii) An appropriate methodology for monitoring cleaning cycles to ensure proper operation.

(iv) Monthly check of bag cleaning mechanisms for proper functioning through visual inspection or equivalent means.

(v) Quarterly visual check of bag tension on reverse air and shaker-type baghouses to ensure that the bags are not kinked (kneed or bent) or lying on their sides. Such checks are not required for shaker-type baghouses using self-tensioning (spring loaded) devices.

(vi) Quarterly confirmation of the physical integrity of the baghouse structure through visual inspection of the baghouse interior for air leaks.

(vii) Semiannual inspection of fans for wear, material buildup and corrosion through visual inspection, vibration detectors, or equivalent means.

(e) *Bag leak detection system.* (1) For each baghouse used to control emissions from an electric arc furnace, you must install, operate, and maintain a bag leak detection system according to paragraphs (e)(2) through (4) of this section, unless a system meeting the requirements of paragraph (p) of this section, for a CEMS and continuous emissions rate monitoring system, is installed for monitoring the concentration of particulate matter, or an existing positive pressure baghouse used to control emissions from an electric arc furnaces that is subject to paragraph (c) of this section. You may choose to install, operate, and maintain a bag leak detection system for any other baghouse in operation at the facility according to paragraphs (e)(2) through (4) of this section.

(2) The procedures you specified in the standard operating procedures manual for baghouse maintenance must include, at a minimum, a preventative maintenance schedule that is consistent with the baghouse manufacturer's instructions for routine and long-term maintenance.

(3) Each bag leak detection system must meet the specifications and requirements in paragraphs (e)(3)(i) through (viii) of this section.

(i) The bag leak detection system must be certified by the manufacturer to be capable of detecting PM emissions at concentrations of 1.0 milligram per dry standard cubic meter (0.00044 grains per actual cubic foot) or less.

(ii) The bag leak detection system sensor must provide output of relative PM loadings.

(iii) The bag leak detection system must be equipped with an alarm system that will alarm when an increase in relative particulate loadings is detected over a preset level.

(iv) You must install and operate the bag leak detection system in a manner consistent with the guidance provided in ''Office of Air Quality Planning and Standards (OAQPS) Fabric Filter Bag Leak Detection Guidance'' EPA–454/R–98–015, September 1997 (incorporated by reference, see §63.14) and the manufacturer's written specifications and recommendations for installation, operation and adjustment of the system.

(v) The initial adjustment of the system must, at a minimum, consist of establishing the baseline output by adjusting the sensitivity (range) and the averaging period of the device and establishing the alarm set points and the alarm delay time.

(vi) Following initial adjustment, you must not adjust the sensitivity or range, averaging period, alarm set points, or alarm delay time, except as detailed in the approved standard operating procedures manual required under paragraph (a) of this section. You cannot increase the sensitivity by more than 100 percent or decrease the sensitivity by more than 50 percent over a 365-day period unless such adjustment follows a complete baghouse inspection that demonstrates that the baghouse is in good operating condition.

(vii) You must install the bag leak detector downstream of the baghouse.

(viii) Where multiple detectors are required, the system's instrumentation

sfrattini on LAPJZKW1R2 with $$_JOB
VerDate Sep<11>2014 09:16 Apr 04, 2023 Jkt 256165 PO 00000 Frm 00251 Fmt 8010 Sfmt 8010 Q:\40\256165.XXX PC31

and alarm may be shared among detectors.

(4) You must include in the standard operating procedures manual required by paragraph (a) of this section a corrective action plan that specifies the procedures to be followed in the case of a bag leak detection system alarm. The corrective action plan must include, at a minimum, the procedures that you will use to determine and record the time and cause of the alarm as well as the corrective actions taken to minimize emissions as specified in paragraphs (e)(4)(i) and (ii) of this section.

(i) The procedures used to determine the cause of the alarm must be initiated within 30 minutes of the alarm.

(ii) The cause of the alarm must be alleviated by taking the necessary corrective action(s) that may include, but not be limited to, those listed in paragraphs (e)(4)(ii)(A) through (F) of this section.

(A) Inspecting the baghouse for air leaks, torn or broken filter elements, or any other malfunction that may cause an increase in emissions.

(B) Sealing off defective bags or filter media.

(C) Replacing defective bags or filter media, or otherwise repairing the control device.

(D) Sealing off a defective baghouse compartment.

(E) Cleaning the bag leak detection system probe, or otherwise repairing the bag leak detection system.

(F) Shutting down the process producing the particulate emissions.

(f) If you use a wet particulate matter scrubber, you must collect the pressure drop and liquid flow rate monitoring system data according to § 63.1628, reduce the data to 24-hour block averages and maintain the 24-hour average pressure drop and liquid flow-rate at or above the operating limits established during the performance test according to § 63.1625(c)(4)(i).

(g) If you use curtains or partitions to prevent process fugitive emissions from escaping the area around the process fugitive emission source or other parts of the building, you must perform quarterly inspections of the physical condition of these curtains or partitions to determine if there are any tears or openings.

(h) *Shop building opacity*. In order to demonstrate continuous compliance with the opacity standards in § 63.1623, you must comply with the requirements § 63.1625(d)(1) and one of the monitoring options in paragraphs (h)(1) or (2) of this section. The selected option must be consistent with that selected during the initial performance test described in § 63.1625(d)(2). Alternatively, you may use the provisions of § 63.8(f) to request approval to use an alternative monitoring method.

(1) If you choose to establish operating parameters during the compliance test as specified in § 63.1625(d)(2)(i), you must meet one of the following requirements.

(i) Check and record the control system fan motor amperes and capture system damper positions once per shift.

(ii) Install, calibrate and maintain a monitoring device that continuously records the volumetric flow rate through each separately ducted hood.

(iii) Install, calibrate and maintain a monitoring device that continuously records the volumetric flow rate at the inlet of the air pollution control device and check and record the capture system damper positions once per shift.

(2) If you choose to establish operating parameters during the compliance test as specified in § 63.1625(d)(2)(ii), you must monitor the selected parameter(s) on a frequency specified in the assessment and according to a method specified in the engineering assessment

(3) All flow rate monitoring devices must meet the following requirements:

(i) Be installed in an appropriate location in the exhaust duct such that reproducible flow rate monitoring will result.

(ii) Have an accuracy ±10 percent over its normal operating range and be calibrated according to the manufacturer's instructions.

(4) The Administrator may require you to demonstrate the accuracy of the monitoring device(s) relative to Methods 1 and 2 of appendix A–1 of part 60 of this chapter.

(5) Failure to maintain the appropriate capture system parameters (e.g., fan motor amperes, flow rate and/or damper positions) establishes the need to initiate corrective action as soon as

sfrattini on LAPJZKW1R2 with $$_JOB
VerDate Sep<11>2014 09:16 Apr 04, 2023 Jkt 256165 PO 00000 Frm 00252 Fmt 8010 Sfmt 8010 Q:\40\256165.XXX PC31

practicable after the monitoring excursion in order to minimize excess emissions.

(i) *Furnace capture system.* You must perform quarterly (once every three months) inspections of the furnace fugitive capture system equipment to ensure that the hood locations have not been changed or obstructed because of contact with cranes or ladles, quarterly inspections of the physical condition of hoods and ductwork to the control device to determine if there are any openings or leaks in the ductwork, quarterly inspections of the hoods and ductwork to determine if there are any flow constrictions in ductwork due to dents or accumulated dust and quarterly examinations of the operational status of flow rate controllers (pressure sensors, dampers, damper switches, etc.) to ensure they are operating correctly. Any deficiencies must be recorded and proper maintenance and repairs performed.

(j) *Requirements for sources using CMS.* If you demonstrate compliance with any applicable emissions limit through use of a continuous monitoring system (CMS), where a CMS includes a continuous parameter monitoring system (CPMS) as well as a continuous emissions monitoring system (CEMS), you must develop a site-specific monitoring plan and submit this site-specific monitoring plan, if requested, at least 60 days before your initial performance evaluation (where applicable) of your CMS. Your site-specific monitoring plan must address the monitoring system design, data collection and the quality assurance and quality control elements outlined in this paragraph and in §63.8(d). You must install, operate and maintain each CMS according to the procedures in your approved site-specific monitoring plan. Using the process described in §63.8(f)(4), you may request approval of monitoring system quality assurance and quality control procedures alternative to those specified in paragraphs (j)(1) through (6) of this section in your site-specific monitoring plan.

(1) The performance criteria and design specifications for the monitoring system equipment, including the sample interface, detector signal analyzer and data acquisition and calculations;

(2) Sampling interface location such that the monitoring system will provide representative measurements;

(3) Equipment performance checks, system accuracy audits, or other audit procedures;

(4) Ongoing operation and maintenance procedures in accordance with the general requirements of §63.8(c)(1) and (3);

(5) Conditions that define a continuous monitoring system that is out of control consistent with §63.8(c)(7)(i) and for responding to out of control periods consistent with §63.8(c)(7)(ii) and (c)(8) or Table 1 to this subpart, as applicable; and

(6) Ongoing recordkeeping and reporting procedures in accordance with provisions in §63.10(c), (e)(1) and (e)(2)(i), and Table 1 to this subpart, as applicable.

(k) If you have an operating limit that requires the use of a CPMS, you must install, operate and maintain each continuous parameter monitoring system according to the procedures in paragraphs (k)(1) through (7) of this section.

(1) The CPMS must complete a minimum of one cycle of operation for each successive 15-minute period. You must have a minimum of four successive cycles of operation to have a valid hour of data.

(2) Except for periods of monitoring system malfunctions, repairs associated with monitoring system malfunctions and required monitoring system quality assurance or quality control activities (including, as applicable, system accuracy audits and required zero and span adjustments), you must operate the CMS at all times the affected source is operating. A monitoring system malfunction is any sudden, infrequent, not reasonably preventable failure of the monitoring system to provide valid data. Monitoring system failures that are caused in part by poor maintenance or careless operation are not malfunctions. You are required to complete monitoring system repairs in response to monitoring system malfunctions and to return the monitoring system to operation as expeditiously as practicable.

sfrattini on LAPJZKW1R2 with $$_JOB
VerDate Sep<11>2014 09:16 Apr 04, 2023 Jkt 256165 PO 00000 Frm 00253 Fmt 8010 Sfmt 8010 Q:\40\256165.XXX PC31

(3) You may not use data recorded during monitoring system malfunctions, repairs associated with monitoring system malfunctions, or required monitoring system quality assurance or control activities in calculations used to report emissions or operating levels. You must use all the data collected during all other required data collection periods in assessing the operation of the control device and associated control system.

(4) Except for periods of monitoring system malfunctions, repairs associated with monitoring system malfunctions and required quality monitoring system quality assurance or quality control activities (including, as applicable, system accuracy audits and required zero and span adjustments), failure to collect required data is a deviation of the monitoring requirements.

(5) You must conduct other CPMS equipment performance checks, system accuracy audits, or other audit procedures specified in your site-specific monitoring plan at least once every 12 months.

(6) You must conduct a performance evaluation of each CPMS in accordance with your site-specific monitoring plan.

(7) You must record the results of each inspection, calibration and validation check.

(l) *CPMS for measuring gaseous flow.* (1) Use a flow sensor with a measurement sensitivity of 5 percent of the flow rate or 10 cubic feet per minute, whichever is greater;

(2) Check all mechanical connections for leakage at least every month; and

(3) Perform a visual inspection at least every 3 months of all components of the flow CPMS for physical and operational integrity and all electrical connections for oxidation and galvanic corrosion if your flow CPMS is not equipped with a redundant flow sensor.

(m) *CPMS for measuring liquid flow.* (1) Use a flow sensor with a measurement sensitivity of 2 percent of the liquid flow rate; and

(2) Reduce swirling flow or abnormal velocity distributions due to upstream and downstream disturbances.

(n) *CPMS for measuring pressure.* (1) Minimize or eliminate pulsating pressure, vibration and internal and external corrosion; and

(2) Use a gauge with a minimum tolerance of 1.27 centimeters of water or a transducer with a minimum tolerance of 1 percent of the pressure range.

(3) Perform checks at least once each process operating day to ensure pressure measurements are not obstructed (*e.g.*, check for pressure tap pluggage daily).

(o) *CPMS for measuring pH.* (1) Ensure the sample is properly mixed and representative of the fluid to be measured.

(2) Check the pH meter's calibration on at least two points every eight hours of process operation.

(p) *Particulate Matter CEMS.* If you are using a CEMS to measure particulate matter emissions to meet requirements of this subpart, you must install, certify, operate and maintain the particulate matter CEMS as specified in paragraphs (p)(1) through (4) of this section.

(1) You must conduct a performance evaluation of the PM CEMS according to the applicable requirements of § 60.13 of this chapter and Performance Specification 11 at 40 CFR part 60, appendix B.

(2) During each PM correlation testing run of the CEMS required by Performance Specification 11 at 40 CFR part 60, appendix B, PM and oxygen (or carbon dioxide) collect data concurrently (or within a 30- to 60-minute period) by both the CEMS and by conducting performance tests using Method 5 or 5D at 40 CFR part 60, appendix A–3 or Method 17 at 40 CFR part 60, appendix A–6.

(3) Perform quarterly accuracy determinations and daily calibration drift tests in accordance with Procedure 2 at 40 CFR part 60, appendix F. Relative Response Audits must be performed annually and Response Correlation Audits must be performed every 3 years.

(4) Within 60 days after the date of completing each CEMS relative accuracy test audit or performance test conducted to demonstrate compliance with this subpart, you must submit the relative accuracy test audit data and the results of the performance test as specified in § 63.1628(e).

[80 FR 37390, June 30, 2015, as amended at 82 FR 5408, Jan. 18, 2017]

sfrattini on LAPJZKW1R2 with $$_JOB
VerDate Sep<11>2014 09:16 Apr 04, 2023 Jkt 256165 PO 00000 Frm 00254 Fmt 8010 Sfmt 8010 Q:\40\256165.XXX PC31

§63.1627 What notification requirements must I meet?

(a) You must comply with all of the notification requirements of §63.9. Electronic notifications are encouraged when possible.

(b)(1) You must submit the process fugitive ventilation plan required under §63.1624(a), the outdoor fugitive dust control plan required under §63.1624(b), the site-specific monitoring plan for CMS required under §63.1626(i) and the standard operating procedures manual for baghouses required under §63.1626(a) to the Administrator or delegated authority. You must submit this notification no later than June 30, 2016. For sources that commenced construction or reconstruction after June 30, 2015, you must submit this notification no later than 180 days before startup of the constructed or reconstructed ferromanganese or silicomanganese production facility. For an affected source that has received a construction permit from the Administrator or delegated authority on or before June 30, 2015, you must submit this notification no later than June 30, 2016.

(2) The plans and procedures documents submitted as required under paragraph (b)(1) of this section must be submitted to the Administrator in electronic format and whenever an update is made to the procedure.

[80 FR 37390, June 30, 2015]

§63.1628 What recordkeeping and reporting requirements must I meet?

(a) You must comply with all of the recordkeeping and reporting requirements specified in §63.10 of the General Provisions that are referenced in Table 1 to this subpart.

(1) Records must be maintained in a form suitable and readily available for expeditious review, according to §63.10(b)(1). However, electronic recordkeeping and reporting is encouraged and required for some records and reports.

(2) Records must be kept on site for at least 2 years after the date of occurrence, measurement, maintenance, corrective action, report, or record, according to §63.10(b)(1).

(b) You must maintain, for a period of 5 years, records of the information listed in paragraphs (b)(1) through (11) of this section.

(1) Electronic records of the bag leak detection system output.

(2) An identification of the date and time of all bag leak detection system alarms, the time that procedures to determine the cause of the alarm were initiated, the cause of the alarm, an explanation of the corrective actions taken and the date and time the cause of the alarm was corrected.

(3) All records of inspections and maintenance activities required under §63.1626(c) as part of the practices described in the standard operating procedures manual for baghouses required under §63.1626(a).

(4) Electronic records of the pressure drop and water flow rate values for wet scrubbers used to control particulate matter emissions as required in §63.1626(e), identification of periods when the 1-hour average pressure drop and water flow rate values are below the established minimum operating limits and an explanation of the corrective actions taken.

(5) Electronic records of the shop building capture system monitoring required under §63.1626(g)(1) and (2), as applicable, or identification of periods when the capture system parameters were not maintained and an explanation of the corrective actions taken.

(6) Records of the results of quarterly inspections of the furnace capture system required under §63.1626(h).

(7) Electronic records of the continuous flow monitors or pressure monitors required under §63.1626(i) and (j) and an identification of periods when the flow rate or pressure was not maintained as required in §63.1626(e).

(8) Electronic records of the output of any CEMS installed to monitor particulate matter emissions meeting the requirements of §63.1626(i).

(9) Records of the occurrence and duration of each startup and/or shutdown.

(10) Records of the occurrence and duration of each malfunction of operation (*i.e.*, process equipment) or the air pollution control equipment and monitoring equipment.

(11) Records that explain the periods when the procedures outlined in the process fugitives ventilation plan required under §63.1624(a), the fugitives

sfrattini on LAPJZKW1R2 with $$_JOB
VerDate Sep<11>2014 09:16 Apr 04, 2023 Jkt 256165 PO 00000 Frm 00255 Fmt 8010 Sfmt 8010 Q:\40\256165.XXX PC31

dust control plan required under § 63.1624(b), the site-specific monitoring plan for CMS required under § 63.1626(i) and the standard operating procedures manual for baghouses required under § 63.1626(a).

(c) You must comply with all of the reporting requirements specified in § 63.10 of the General Provisions that are referenced in Table 1 to this subpart.

(1) You must submit reports no less frequently than specified under § 63.10(e)(3) of the General Provisions.

(2) Once a source reports a violation of the standard or excess emissions, you must follow the reporting format required under § 63.10(e)(3) until a request to reduce reporting frequency is approved by the Administrator.

(d) In addition to the information required under the applicable sections of § 63.10, you must include in the reports required under paragraph (c) of this section the information specified in paragraphs (d)(1) through (7) of this section.

(1) Reports that identify and explain the periods when the procedures outlined in the process fugitives ventilation plan required under § 63.1624(a), the fugitives dust control plan required under § 63.1624(b), the site-specific monitoring plan for CMS required under § 63.1626(i) and the standard operating procedures manual for baghouses required under § 63.1626(a) were not followed.

(2) Reports that identify the periods when the average hourly pressure drop or flow rate of wet scrubbers used to control particulate emissions dropped below the levels established in § 63.1626(e) and an explanation of the corrective actions taken.

(3) *Bag leak detection system.* Reports including the following information:

(i) Records of all alarms.

(ii) Description of the actions taken following each bag leak detection system alarm.

(4) Reports of the shop building capture system monitoring required under § 63.1626(g)(1) and (2), as applicable, identification of periods when the capture system parameters were not maintained and an explanation of the corrective actions taken.

(5) Reports of the results of quarterly inspections of the furnace capture system required under § 63.1626(h).

(6) Reports of the CPMS required under § 63.1626, an identification of periods when the monitored parameters were not maintained as required in § 63.1626 and corrective actions taken.

(7) If a malfunction occurred during the reporting period, the report must include the number, duration and a brief description for each type of malfunction that occurred during the reporting period and caused or may have caused any applicable emissions limitation to be exceeded. The report must also include a description of actions taken by the owner or operator during a malfunction of an affected source to minimize emissions in accordance with § 63.1623(f), including actions taken to correct a malfunction.

(e) Within 60 days after the date of completing each CEMS relative accuracy test audit or performance test conducted to demonstrate compliance with this subpart, you must submit the relative accuracy test audit data and the results of the performance test in the method specified by paragraphs (e)(1) and (2) of this section. The results of the performance test must contain the information listed in paragraph (e)(2) of this section.

(1)(i) Within 60 days after the date of completing each performance test (as defined in § 63.2) required by this subpart, you must submit the results of the performance tests, including any associated fuel analyses, following the procedure specified in either paragraph (e)(1)(i)(A) or (B) of this section.

(A) For data collected using test methods supported by the EPA's Electronic Reporting Tool (ERT) as listed on the EPA's ERT Web site (*http://www.epa.gov/ttn/chief/ert/index.html*), you must submit the results of the performance test to the EPA via the Compliance and Emissions Data Reporting Interface (CEDRI). CEDRI can be accessed through the EPA's Central Data Exchange (CDX) (*http://cdx.epa.gov/epa_home.asp*). Performance test data must be submitted in a file format generated through the use of the EPA's ERT. Alternatively, you may submit performance test data in an electronic file format consistent

sfrattini on LAPJZKW1R2 with $$_JOB
VerDate Sep<11>2014 09:16 Apr 04, 2023 Jkt 256165 PO 00000 Frm 00256 Fmt 8010 Sfmt 8010 Q:\40\256165.XXX PC31

with the extensible markup language (XML) schema listed on the EPA's ERT Web site once the XML schema is available. If you claim that some of the performance test information being submitted is confidential business information (CBI), you must submit a complete file generated through the use of the EPA's ERT or an alternate electronic file consistent with the XML schema listed on the EPA's ERT Web site, including information claimed to be CBI, on a compact disk, flash drive, or other commonly used electronic storage media to the EPA. The electronic media must be clearly marked as CBI and mailed to U.S. EPA/OAQPS/CORE CBI Office, Attention: Group Leader, Measurement Policy Group, MD C404–02, 4930 Old Page Rd., Durham, NC 27703. The same ERT or alternate file with the CBI omitted must be submitted to the EPA via the EPA's CDX as described earlier in this paragraph (e)(1)(i)(A).

(B) For data collected using test methods that are not supported by the EPA's ERT as listed on the EPA's ERT Web site, you must submit the results of the performance test to the Administrator at the appropriate address listed in §63.13.

(ii) Within 60 days after the date of completing each CEMS performance evaluation (as defined in §63.2), you must submit the results of the performance evaluation following the procedure specified in either paragraph (b)(1) or (2) of this section.

(A) For performance evaluations of continuous monitoring systems measuring relative accuracy test audit (RATA) pollutants that are supported by the EPA's ERT as listed on the EPA's ERT Web site, you must submit the results of the performance evaluation to the EPA via the CEDRI. (CEDRI can be accessed through the EPA's CDX.) Performance evaluation data must be submitted in a file format generated through the use of the EPA's ERT. Alternatively, you may submit performance evaluation data in an electronic file format consistent with the XML schema listed on the EPA's ERT Web site, once the XML schema is available. If you claim that some of the performance evaluation information being transmitted is CBI, you must submit a complete file generated through the use of the EPA's ERT or an alternative electronic file consistent with the XML schema listed on the EPA's ERT Web site, including information claimed to be CBI, on a compact disk, flash drive or other commonly used electronic storage media to the EPA. The electronic storage media must be clearly marked as CBI and mailed to U.S. EPA/OAQPS/CORE CBI Office, Attention: Group Leader, Measurement Policy Group, MD C404–02, 4930 Old Page Rd., Durham, NC 27703. The same ERT file or alternate file with the CBI omitted must be submitted to the EPA via the EPA's CDX as described earlier in this paragraph (e)(1)(ii)(A).

(B) For any performance evaluations of continuous monitoring systems measuring RATA pollutants that are not supported by the EPA's ERT as listed on the EPA's ERT Web site, you must submit the results of the performance evaluation to the Administrator at the appropriate address listed in §63.13.

(2) The results of a performance test shall include the purpose of the test; a brief process description; a complete unit description, including a description of feed streams and control devices; sampling site description; pollutants measured; description of sampling and analysis procedures and any modifications to standard procedures; quality assurance procedures; record of operating conditions, including operating parameters for which limits are being set, during the test; record of preparation of standards; record of calibrations; raw data sheets for field sampling; raw data sheets for field and laboratory analyses; chain-of-custody documentation; explanation of laboratory data qualifiers; example calculations of all applicable stack gas parameters, emission rates, percent reduction rates and analytical results, as applicable; and any other information required by the test method, a relevant standard, or the Administrator.

[80 FR 37390, June 30, 2015]

sfrattini on LAPJZKW1R2 with $$_JOB
VerDate Sep<11>2014 09:16 Apr 04, 2023 Jkt 256165 PO 00000 Frm 00257 Fmt 8010 Sfmt 8010 Q:\40\256165.XXX PC31

§ 63.1629 Who implements and enforces this subpart?

(a) This subpart can be implemented and enforced by the U.S. EPA, or a delegated authority such as the applicable state, local, or tribal agency. If the U.S. EPA Administrator has delegated authority to a state, local, or tribal agency, then that agency, in addition to the U.S. EPA, has the authority to implement and enforce this subpart. Contact the applicable U.S. EPA Regional Office to find out if this subpart is delegated to a state, local, or tribal agency.

(b) In delegating implementation and enforcement authority of this subpart to a state, local, or tribal agency under subpart E of this part, the authorities contained in paragraph (c) of this section are retained by the Administrator of U.S. EPA and cannot be transferred to the state, local, or tribal agency.

(c) The authorities that cannot be delegated to state, local, or tribal agencies are as specified in paragraphs (c)(1) through (4) of this section.

(1) Approval of alternatives to requirements in §§ 63.1620 and 63.1621 and 63.1623 and 63.1624.

(2) Approval of major alternatives to test methods under § 63.7(e)(2)(ii) and (f), as defined in § 63.90 and as required in this subpart.

(3) Approval of major alternatives to monitoring under § 63.8(f), as defined in § 63.90 and as required in this subpart.

(4) Approval of major alternatives to recordkeeping and reporting under § 63.10(f), as defined in § 63.90 and as required in this subpart.

[80 FR 37390, June 30, 2015]

§§ 63.1630–63.1649 [Reserved]

§ 63.1650 Applicability and compliance dates.

(a) This subpart applies to all new and existing ferromanganese and silicomanganese production facilities that manufacture ferromanganese or silicomanganese and are major sources or are co-located at major sources of hazardous air pollutant emissions.

(b) The following sources at a ferromanganese and silicomanganese production facility are subject to this subpart:

(1) Open submerged arc furnaces with a furnace power input of 22 MW or less when producing ferromanganese.

(2) Open submerged arc furnaces with a furnace power input greater than 22 MW when producing ferromanganese.

(3) Open submerged arc furnaces with a furnace power input greater than 25 MW when producing silicomanganese.

(4) Open submerged arc furnaces with a furnace power input of 25 MW or less when producing silicomanganese.

(5) Semi-sealed submerged arc furnaces when producing ferromanganese.

(6) Metal oxygen refining (MOR) process.

(7) Crushing and screening operations.

(8) Fugitive dust sources.

(c) A new affected source is one for which construction or reconstruction commenced after August 4, 1998.

(d) Table 1 to this subpart specifies the provisions of subpart A of this part that apply to owners and operators of ferroalloy production facilities subject to this subpart.

(e) *Compliance dates.* (1) [Reserved]

(2) Each owner or operator of a new or reconstructed affected source that commences construction or reconstruction after August 4, 1998 and before November 23, 2011, must comply with the requirements of this subpart by May 20, 1999 or upon startup of operations, whichever is later.

[64 FR 27458, May 20, 1999, as amended at 66 FR 16012, Mar. 22, 2001; 80 FR 37399, June 30, 2015]

§ 63.1651 Definitions.

Terms in this subpart are defined in the Clean Air Act (Act), in subpart A of this part, or in this section as follows:

Bag leak detection system means a system that is capable of continuously monitoring particulate matter (dust) loadings in the exhaust of a baghouse in order to detect bag leaks and other upset conditions. A bag leak detection system includes, but is not limited to, an instrument that operates on triboelectric, light scattering, light transmittance, or other effect to continuously monitor relative particulate matter loadings.

Capture system means the equipment (including hoods, ducts, fans, dampers,

sfrattini on LAPJZKW1R2 with $$_JOB
VerDate Sep<11>2014 09:16 Apr 04, 2023 Jkt 256165 PO 00000 Frm 00258 Fmt 8010 Sfmt 8010 Q:\40\256165.XXX PC31

etc.) used to capture or transport particulate matter generated by an affected submerged arc furnace.

Casting means the period of time from when molten ferroalloy falls from the furnace tapping runner into the ladle until pouring into molds is completed. This includes the following operations: ladle filling, pouring alloy from one ladle to another, slag separation, slag removal, and ladle transfer by crane, truck, or other conveyance.

Crushing and screening equipment means the crushers, grinders, mills, screens and conveying systems used to crush, size, and prepare for packing manganese-containing materials, including raw materials, intermediate products, and final products.

Fugitive dust source means a stationary source from which manganese-bearing particles are discharged to the atmosphere due to wind or mechanical inducement such as vehicle traffic. Fugitive dust sources include plant roadways, yard areas, and outdoor material storage and transfer operations.

Furnace power input means the resistive electrical power consumption of a submerged arc furnace, expressed as megawatts (MW).

Malfunction means any sudden, infrequent, and not reasonably preventable failure of air pollution control equipment, process equipment, or a process to operate in a normal or usual manner which causes, or has the potential to cause, the emission limitations in an applicable standard to be exceeded. Failures caused in part by poor maintenance or careless operation are not malfunctions.

Metal oxygen refining (MOR) process means the reduction of the carbon content of ferromanganese through the use of oxygen.

Open submerged arc furnace means an electric submerged arc furnace that is equipped with a canopy hood above the furnace to collect primary emissions.

Operating time means the period of time in hours that the affected source is in operation beginning at a startup and ending at the next shutdown.

Plant roadway means any area at a ferromanganese and silicomanganese production facility that is subject to plant mobile equipment, such as fork lifts, front end loaders, or trucks, carrying manganese-bearing materials. Excluded from this definition are employee and visitor parking areas, provided they are not subject to traffic by plant mobile equipment.

Primary emissions means gases and emissions collected by hoods and ductwork located above an open furnace or under the cover of a semi-closed or sealed furnace.

Sealed submerged arc furnace means an electric submerged arc furnace equipped with a total enclosure or cover from which primary emissions are evacuated directly.

Semi-closed submerged arc furnace means an electric submerged arc furnace equipped with a partially sealed cover over the furnace. This cover is equipped with openings to allow penetration of the electrodes into the furnace. Mix is introduced into the furnace around the electrode holes forming a partial seal between the electrodes and the cover. Furnace emissions generated under the cover are ducted to an emission control device. Emissions that escape the cover are collected and vented through stacks directly to the atmosphere.

Shop means the building which houses one or more submerged arc furnaces.

Shutdown means the cessation of operation of an affected source for any purpose.

Startup means the setting in operation of an affected source for any purpose.

Submerged arc furnace means any furnace wherein electrical energy is converted to heat energy by transmission of current between electrodes partially submerged in the furnace charge. The furnace may be of an open, semi-sealed, or sealed design.

Tapping emissions means a source of air pollutant emissions that occur during the process of removing the molten product from the furnace.

Tapping period means the time from when a tap hole is opened until the time a tap hole is closed.

[64 FR 27458, May 20, 1999, as amended at 71 FR 20462, Apr. 20, 2006]

§ 63.1652 Emission standards.

(a) *New and reconstructed submerged arc furnaces.* No owner or operator shall

sfrattini on LAPJZKW1R2 with $$_JOB
VerDate Sep<11>2014 09:16 Apr 04, 2023 Jkt 256165 PO 00000 Frm 00259 Fmt 8010 Sfmt 8010 Q:\40\256165.XXX PC31

cause to be discharged into the atmosphere from any new or reconstructed submerged arc furnace exhaust gases (including primary and tapping) containing particulate matter in excess of one of the following:

(1) 0.23 kilograms per hour per megawatt (kg/hr/MW) (0.51 pounds per hour per megawatt [lb/hr/MW]), or

(2) 35 milligrams per dry standard cubic meter (mg/dscm) (0.015 grains per dry standard cubic foot [gr/dscf]).

(b) *Existing open submerged arc furnaces.* No owner or operator shall cause to be discharged into the atmosphere from any existing open submerged arc furnace exhaust gases (including primary and tapping) containing particulate matter in excess of one of the following:

(1) 9.8 kilograms per hour (kg/hr) (21.7 pounds per hour (lb/hr)) when producing ferromanganese in an open furnace operating at a furnace power input of 22 MW or less; or

(2) 13.5 kg/hr (29.8 lb/hr) when producing ferromanganese in an open furnace operating at a furnace power input greater than 22 MW; or

(3) 16.3 kg/hr (35.9 lb/hr) when producing silicomanganese in an open furnace operating at a furnace power input greater than 25 MW; or

(4) 12.3 kg/hr (27.2 lb/hr) when producing silicomanganese in an open furnace operating at a furnace power input of 25 MW or less.

(c) *Existing semi-sealed submerged arc furnaces.* No owner or operator shall cause to be discharged into the atmosphere from any existing semi-sealed submerged arc furnace exhaust gases (including primary, tapping, and vent stacks) containing particulate matter in excess of 11.2 kg/hr (24.7 lb/hr) when producing ferromanganese.

(d) *MOR process.* No owner or operator shall cause to be discharged into the atmosphere from any new, reconstructed, or existing MOR process exhaust gases containing particulate matter in excess of 69 mg/dscm (0.03 gr/dscf).

(e) *Crushing and screening equipment*—(1) *New and reconstructed equipment.* No owner or operator shall cause to be discharged into the atmosphere from any new or reconstructed piece of equipment associated with crushing and screening exhaust gases containing particulate matter in excess of 50 mg/dscm (0.022 gr/dscf).

(2) *Existing equipment.* No owner or operator shall cause to be discharged into the atmosphere from any existing piece of equipment associated with crushing and screening exhaust gases containing particulate matter in excess of 69 (mg/dscm) (0.03 gr/dscf).

(f) At all times, you must operate and maintain any affected source, including associated air pollution control equipment and monitoring equipment, in a manner consistent with safety and good air pollution control practices for minimizing emissions. Determination of whether such operation and maintenance procedures are being used will be based on information available to the Administrator that may include, but is not limited to, monitoring results, review of operation and maintenance procedures, review of operation and maintenance records and inspection of the source.

[64 FR 27458, May 20, 1999, as amended at 66 FR 16013, Mar. 22, 2001; 80 FR 37399, June 30, 2015]

§ 63.1653 Opacity standards.

No owner or operator shall cause emissions exiting from a shop due solely to operations of any affected submerged arc furnace, to exceed 20 percent opacity for more than one 6-minute period during any performance test, with the following exceptions:

(a) Visible particulate emissions from a shop due solely to operation of a semi-closed submerged arc furnace, may exceed 20 percent opacity, measured as a 6-minute average, one time during any performance test, so long as the emissions never exceed 60 percent opacity, measured as a 6-minute average.

(b) Blowing taps, poling and oxygen lancing of the tap hole; burndowns associated with electrode measurements; and maintenance activities associated with submerged arc furnaces and casting operations are exempt from the opacity standards specified in this section.

sfrattini on LAPJZKW1R2 with $$_JOB
VerDate Sep<11>2014 09:16 Apr 04, 2023 Jkt 256165 PO 00000 Frm 00260 Fmt 8010 Sfmt 8010 Q:\40\256165.XXX PC31

§63.1654 Operational and work practice standards.

(a) *Fugitive dust sources.* (1) Each owner or operator of an affected ferromanganese and silicomanganese production facility must prepare, and at all times operate according to, a fugitive dust control plan that describes in detail the measures that will be put in place to control fugitive dust emissions from the individual fugitive dust sources at the facility.

(2) The owner or operator must submit a copy of the fugitive dust control plan to the designated permitting authority on or before the applicable compliance date for the affected source as specified in §63.1650(e). The requirement for the owner or operator to operate the facility according to a written fugitive dust control plan must be incorporated in the operating permit for the facility that is issued by the designated permitting authority under part 70 of this chapter.

(3) The owner or operator may use existing manuals that describe the measures in place to control fugitive dust sources required as part of a State implementation plan or other federally enforceable requirement for particulate matter to satisfy the requirements of paragraph (a)(1) of this section.

(b) *Baghouses equipped with bag leak detection systems.* The owner or operator of a new or reconstructed submerged arc furnace must install and continuously operate a bag leak detection system if the furnace's primary and/or tapping emissions are ducted to a negative pressure baghouse or to a positive pressure baghouse equipped with a stack. The owner or operator must maintain and operate each baghouse such that the following conditions are met:

(1) The alarm on the system does not sound for more than 5 percent of the total operating time in a 6-month reporting period.

(2) A record is made of the date and time of each alarm and procedures to determine the cause of the alarm are initiated within 1 hour of the alarm according to the plan for corrective action required under §63.1657(a)(7).

§63.1655 Maintenance requirements.

(a) The owner or operator of an affected source must comply with the requirements of §63.6(e) of subpart A.

(b)(1) The owner or operator must develop and implement a written maintenance plan for each air pollution control device associated with submerged arc furnaces, metal oxygen refining processes, and crushing and screening operations subject to the provisions of this part. The owner or operator must keep the maintenance plan on record and available for the Administrator's inspection for the life of the air pollution control device or until the affected source is no longer subject to the provisions of this part.

(2) To satisfy the requirement to develop maintenance plans, the owner or operator may use the affected source's standard operating procedures (SOP) manual or other plan, provided the alternative plan meets the requirements of this paragraph and is made available for inspection when requested by the Administrator.

(c) The procedures specified in the maintenance plan must include a preventive maintenance schedule that is consistent with good air pollution control practices for minimizing emissions and, for baghouses, ensure that the requirements specified in §63.1657(a) are met.

(d) The owner or operator must perform monthly inspections of the equipment that is important to the performance of the furnace capture system. This inspection must include an examination of the physical condition of the equipment, suitable for detecting holes in ductwork or hoods, flow constrictions in ductwork due to dents or accumulated dust, and operational status of flow rate controllers (pressure sensors, dampers, damper switches, etc.). Any deficiencies must be recorded and proper maintenance and repairs performed.

§63.1656 Performance testing, test methods, and compliance demonstrations.

(a) *Performance testing.* (1) All performance tests must be conducted according to the requirements in §63.7 of subpart A.

sfrattini on LAPJZKW1R2 with $$_JOB
VerDate Sep<11>2014 09:16 Apr 04, 2023 Jkt 256165 PO 00000 Frm 00261 Fmt 8010 Sfmt 8010 Q:\40\256165.XXX PC31

(2) Each performance test must consist of three separate and complete runs using the applicable test methods.

(3) Each run must be conducted under conditions that are representative of normal process operations.

(4) Performance tests conducted on air pollution control devices serving submerged arc furnaces must be conducted such that at least one tapping period, or at least 20 minutes of a tapping period, whichever is less, is included in at least two of the three runs. The sampling time for each run must be at least as long as three times the average tapping period of the tested furnace, but no less than 60 minutes.

(5) The sample volume for each run must be at least 0.9 dscm (30 dscf).

(6) You must conduct the performance tests specified in paragraph (c) of this section under such conditions as the Administrator specifies based on representative performance of the affected source for the period being tested. Upon request, you must make available to the Administrator such records as may be necessary to determine the conditions of performance tests.

(b) *Test methods.* The following test methods in appendix A of part 60 of this chapter must be used to determine compliance with the emission standards.

(1) Method 1 to select the sampling port location and the number of traverse points.

(2) Method 2 to determine the volumetric flow rate of the stack gas.

(3) Method 3 to determine the dry molecular weight of the stack gas.

(4) Method 4 to determine the moisture content of the stack gas.

(5) Method 5 to determine the particulate matter concentration of the stack gas for negative pressure baghouses and positive pressure baghouses with stacks.

(6) Method 5D to determine particulate matter concentration and volumetric flow rate of the stack gas for positive pressure baghouses without stacks.

(7) Method 9 of appendix A–4 of 40 CFR part 60 to determine opacity. ASTM D7520–16, ''Standard Test Method for Determining the Opacity of a Plume in the Outdoor Ambient Atmosphere'' may be used (incorporated by reference, see § 63.14) with the following conditions:

(i) During the digital camera opacity technique (DCOT) certification procedure outlined in Section 9.2 of ASTM D7520–16, the owner or operator or the DCOT vendor must present the plumes in front of various backgrounds of color and contrast representing conditions anticipated during field use such as blue sky, trees and mixed backgrounds (clouds and/or a sparse tree stand).

(ii) The owner or operator must also have standard operating procedures in place including daily or other frequency quality checks to ensure the equipment is within manufacturing specifications as outlined in Section 8.1 of ASTM D7520–16.

(iii) The owner or operator must follow the recordkeeping procedures outlined in § 63.10(b)(1) for the DCOT certification, compliance report, data sheets and all raw unaltered JPEGs used for opacity and certification determination.

(iv) The owner or operator or the DCOT vendor must have a minimum of four (4) independent technology users apply the software to determine the visible opacity of the 300 certification plumes. For each set of 25 plumes, the user may not exceed 15 percent opacity of any one reading and the average error must not exceed 7.5 percent opacity.

(v) Use of this approved alternative does not provide or imply a certification or validation of any vendor's hardware or software. The onus to maintain and verify the certification and/or training of the DCOT camera, software and operator in accordance with ASTM D7520–16 and these requirements is on the facility, DCOT operator and DCOT vendor.

(8) The owner or operator may use equivalent alternative measurement methods approved by the Administrator following the procedures described in § 63.7(f) of subpart A.

(c) *Compliance demonstration with the emission standards.* (1) The owner or operator must conduct an initial performance test for air pollution control devices or vent stacks subject to § 63.1652(a) through (e) to demonstrate

sfrattini on LAPJZKW1R2 with $$_JOB
VerDate Sep<11>2014 09:16 Apr 04, 2023 Jkt 256165 PO 00000 Frm 00262 Fmt 8010 Sfmt 8010 Q:\40\256165.XXX PC31

compliance with the applicable emission standards.

(2) The owner or operator must conduct annual performance tests for the air pollution control devices and vent stacks associated with the submerged arc furnaces, with the exception of any air pollution control devices that serve tapping emissions combined with non-furnace emissions, such as the MOR process or equipment associated with crushing and screening. Also excluded are air pollution control devices that serve dedicated non-furnace emissions, such as the MOR process or equipment associated with crushing and screening. The results of these annual tests will be used to demonstrate compliance with the emission standards in §63.1652(a) through (e), as applicable.

(3) Following development, and approval, if required, of the site-specific test plan, the owner or operator must conduct a performance test for each air pollution control device or vent stack to measure particulate matter and determine compliance with the applicable standard.

(i) An owner or operator of sources subject to the particulate matter concentration standards in §63.1652(a)(2), (d), or (e), must determine compliance as follows:

(A) Determine the particulate matter concentration using Method 5 or 5D, as applicable.

(B) Compliance is demonstrated if the average concentration for the three runs comprising the performance test does not exceed the standard.

(ii) An owner or operator of sources subject to the particulate mass rate standards in §63.1652(b) or (c) must determine compliance as follows:

(A) Determine the particulate matter concentration and volumetric flow rate using Method 5 or 5D, as applicable.

(B) Compute the mass rate (E_M) of particulate matter for each run using the following equation:

$$E_M = \left[\sum_{i=1}^{N} C_{si} Q_{sdi} \right] / K$$

Where:

E_M = mass rate of particulate matter, kg/hr (lb/hr).

N = total number of exhaust streams at which emissions are quantified.

C_{si} = concentration of particulate matter from exhaust stream ''i'', mg/dscm (gr/dscf).

Q_{sdi} = volumetric flow rate of effluent gas from exhaust stream ''i'', dscm/hr (dscf/hr)

K = conversion factor, 1×10^6 mg/kg (7,000 gr/lb).

(C) Compliance is demonstrated if the average of the mass rates for the three runs comprising the performance test does not exceed the standard.

(iii) An owner or operator of sources subject to the particulate matter process-weighted rate standard in §63.1652(a)(1) must determine compliance as follows:

(A) Determine particulate matter concentration and volumetric flow rate using Method 5 or 5D, as applicable.

(B) Compute the process-weighted mass rate (E_P) of particulate matter for each run using the following equation:

$$E_P = \left[\sum_{i=1}^{N} C_{si} Q_{sdi} \right] / PK$$

Where:

E_P = process-weighted mass rate of particulate matter, kg/hr/MW (lb/hr/MW).

N = total number of exhaust streams at which emissions are quantified.

C_{si} = concentration of particulate matter from exhaust stream ''i'', mg/dscm (gr/dscf)

Q_{sdi} = volumetric flow rate of effluent gas from exhaust stream ''i'', dscm/hr (dscf/hr)

P = Average furnace power input, MW

K = conversion factor, 1×10^6 mg/kg (7,000 gr/lb).

(C) Compliance is demonstrated if the average process-weighted mass rate for the three runs comprising the performance test does not exceed the standard.

(4) If a venturi scrubber is used to comply with the emission standards, the owner or operator must establish as a site-specific operating parameter the lowest average pressure drop on any individual complying run in the three runs constituting any compliant test. The pressure drop must be monitored at least every 5 minutes during the test and hourly averages recorded.

(i) [Reserved]

sfrattini on LAPJZKW1R2 with $$_JOB
VerDate Sep<11>2014 09:16 Apr 04, 2023 Jkt 256165 PO 00000 Frm 00263 Fmt 8010 Sfmt 8010 Q:\40\256165.XXX PC31
ER20MY99.000<.GPH> ER20MY99.001</.GPH>

(ii) The owner or operator may augment the data obtained under paragraph (a)(4) of this section by conducting multiple performance tests to establish a range of compliant operating parameter values. The lowest value of this range would be selected as the operating parameter monitoring value. The use of historic compliance data may be used to establish the compliant operating parameter value if the previous values were recorded during performance tests using the same test methods specified in this subpart and established as required in paragraph (a)(4) of this section.

(d) *Compliance demonstration with opacity standards.* (1)(i) The owner or operator subject to § 63.1653 must conduct initial opacity observations of the shop building to demonstrate compliance with the applicable opacity standards according to § 63.6(h)(5), which addresses the conduct of opacity or visible emission observations.

(ii) In conducting the opacity observations of the shop building, the observer must limit his or her field of view to the area of the shop building roof monitor that corresponds to the placement of the affected submerged arc furnaces.

(iii) The owner or operator must conduct the opacity observations according to EPA Method 9 of 40 CFR part 60, appendix A, for a minimum of 60 minutes.

(2)(i) When demonstrating initial compliance with the shop building opacity standard, as required by paragraph (d)(1) of this section, the owner or operator must simultaneously establish parameter values for one of the following: the control system fan motor amperes and all capture system damper positions, the total volumetric flow rate to the air pollution control device and all capture system damper positions, or volumetric flow rate through each separately ducted hood that comprises the capture system.

(ii) The owner or operator may petition the Administrator to reestablish these parameters whenever he or she can demonstrate to the Administrator's satisfaction that the submerged arc furnace operating conditions upon which the parameters were previously established are no longer applicable. The values of these parameters determined during the most recent demonstration of compliance must be maintained at the appropriate level for each applicable period.

(3) The owner or operator must demonstrate continuing compliance with the opacity standards by following the monitoring requirements specified in § 63.1657(c) and the reporting and recordkeeping requirements specified in §§ 63.1659(b)(4) and 63.1660(b).

(e) *Compliance demonstration with the operational and work practice standards*—(1) *Fugitive dust sources.* Failure to have a fugitive dust control plan or failure to report deviations from the plan and take necessary corrective action would be a violation of the general duty to ensure that fugitive dust sources are operated and maintained in a manner consistent with good air pollution control practices for minimizing emissions per § 63.1652(f).

(2) *Baghouses equipped with bag leak detection systems.* The owner or operator demonstrates compliance with the bag leak detection system requirements by submitting reports as required by § 63.1659(b)(5) showing that the alarm on the system does not sound for more than 5 percent of the total operating time in a 6-month period. Calculate the percentage of total operating time the alarm on the bag leak detection system sounds as follows:

(i) Do not include alarms that occur due solely to a malfunction of the bag leak detection system in the calculation.

(ii) [Reserved]

(iii) Count 1 hour of alarm time for each alarm where the owner or operator initiates procedures to determine the cause within 1 hour of the alarm.

(iv) Count the actual time it takes the owner or operator to initiate procedures to determine the cause of the alarm for each alarm where the owner or operator does not initiate procedures to determine the cause within 1 hour of the alarm.

(v) Calculate the percentage of time the alarm on the bag leak detection system sounds as the ratio of the sum

sfrattini on LAPJZKW1R2 with $$_JOB
VerDate Sep<11>2014 09:16 Apr 04, 2023 Jkt 256165 PO 00000 Frm 00264 Fmt 8010 Sfmt 8010 Q:\40\256165.XXX PC31

of alarm times to the total operating time multiplied by 100.

[64 FR 27458, May 20, 1999, as amended at 71 FR 20462, Apr. 20, 2006; 80 FR 37399, June 30, 2015; 82 FR 5409, Jan. 18, 2017]

§63.1657 Monitoring requirements.

(a) *Baghouses*. (1) For the baghouses serving the submerged arc furnaces, the metal oxygen refining process, and crushing and screening operations, the owner or operator must observe on a daily basis for the presence of any visible emissions.

(2) In addition to the daily visible emissions observation, the owner or operator must conduct the following activities:

(i) Daily monitoring of pressure drop across each baghouse cell, or across the baghouse if it is not possible to monitor each cell individually, to ensure the pressure drop is within the normal operating range identified in the baghouse maintenance plan.

(ii) Weekly confirmation that dust is being removed from hoppers through visual inspection, or equivalent means of ensuring the proper functioning of removal mechanisms.

(iii) Daily check of compressed air supply for pulse-jet baghouses.

(iv) An appropriate methodology for monitoring cleaning cycles to ensure proper operation.

(v) Monthly check of bag cleaning mechanisms for proper functioning through visual inspection or equivalent means.

(vi) Quarterly visual check of bag tension on reverse air and shaker-type baghouses to ensure that the bags are not kinked (kneed or bent) or laying on their sides. Such checks are not required for shaker-type baghouses using self-tensioning (spring loaded) devices.

(vii) Quarterly confirmation of the physical integrity of the baghouse structure through visual inspection of the baghouse interior for air leaks.

(viii) Semiannual inspection of fans for wear, material buildup, and corrosion through visual inspection, vibration detectors, or equivalent means.

(3) In addition to meeting the requirements of paragraphs (a)(1) and (a)(2) of this section, the owner or operator of a new or reconstructed submerged arc furnace must install and continuously operate a bag leak detection system if the furnace primary and/or tapping emissions are ducted to a negative pressure baghouse or to a positive pressure baghouse equipped with a stack. The bag leak detection system must meet the following requirements:

(i) The bag leak detection system must be certified by the manufacturer to be capable of detecting particulate matter emissions at concentrations of 10 milligrams per actual cubic meter (0.0044 grains per actual cubic foot) or less.

(ii) The bag leak detection system sensor must provide output of relative particulate matter loadings, and the owner or operator must continuously record the output from the bag leak detection system.

(iii) The bag leak detection system must be equipped with an alarm system that will sound when an increase in relative particulate loadings is detected over a preset level. The alarm must be located where it can be heard by the appropriate plant personnel.

(iv) Each bag leak detection system that works based on the triboelectric effect must be installed, calibrated, operated, and maintained consistent with the U.S. Environmental Protection Agency guidance document ''Fabric Filter Bag Leak Detection Guidance'' (EPA–454/R–98–015). Other bag leak detection systems must be installed, calibrated, and maintained consistent with the manufacturer's written specifications and recommendations.

(v) The initial adjustment of the system must, at a minimum, consist of establishing the baseline output by adjusting the sensitivity (range) and the averaging period of the device, and establishing the alarm set points and the alarm delay time.

(vi) Following initial adjustment, the owner or operator must not adjust the sensitivity or range, averaging period, alarm set points, or alarm delay time, except as detailed in the maintenance plan required under §63.1655(b). In no event must the sensitivity be increased by more than 100 percent or decreased more than 50 percent over a 365-day period unless a responsible official certifies the baghouse has been inspected

sfrattini on LAPJZKW1R2 with $$_JOB
VerDate Sep<11>2014 09:16 Apr 04, 2023 Jkt 256165 PO 00000 Frm 00265 Fmt 8010 Sfmt 8010 Q:\40\256165.XXX PC31

and found to be in good operating condition.

(vii) Where multiple detectors are required, the system's instrumentation and alarm may be shared among detectors.

(4) As part of the maintenance plan required by § 63.1655(b), the owner or operator must develop and implement corrective action procedures to be followed in the case of a bag leak detection system alarm (for baghouses equipped with such a system), the observation of visible emissions from the baghouse, or the indication through the periodic baghouse system inspections that the system is not operating properly. The owner or operator must initiate corrective action as soon as practicable after the occurrence of the observation or event indicating a problem.

(5) The corrective action plan must include procedures used to determine the cause of an alarm or other indications of problems as well as actions to minimize emissions. These actions may include the following:

(i) Inspecting the baghouse for air leaks, torn or broken bags or filter media, or any other condition that may cause an increase in emissions.

(ii) Sealing off defective bags or filter media.

(iii) Replacing defective bags or filter media, or otherwise repairing the control device.

(iv) Sealing off a defective baghouse compartment.

(v) Cleaning the bag leak detection system probe, or otherwise repairing the bag leak detection system.

(vi) Shutting down the process producing the particulate matter emissions.

(6) Failure to monitor or failure to take corrective action under the requirements of paragraph (a) of this section would be a violation of the general duty to operate in a manner consistent with good air pollution control practices that minimizes emissions per § 63.1652(f).

(b) *Venturi scrubbers.* (1) The owner or operator must monitor the pressure drop across the venturi at least every 5 minutes and record the average hourly pressure drop. Measurement of an average hourly pressure drop less than the pressure drop operating parameter limit established during a successful compliance demonstration would be a violation of the applicable emission standard, unless the excursion in the pressure drop is due to a malfunction.

(2) As part of the maintenance plan required by § 63.1655(b), the owner or operator must develop and implement corrective action procedures to be followed in the case of a violation of the pressure drop requirement. The owner or operator must initiate corrective action as soon as practicable after the excursion.

(3) Failure to monitor or failure to take corrective action under the requirements of paragraph (b) of this section would be a violation of the general duty to operate in a manner consistent with good air pollution control practices that minimizes emissions per § 63.1652(f).

(c) *Shop opacity.* The owner or operator subject to the opacity standards in § 63.1653 must comply with one of the monitoring options in paragraphs (c)(1), (c)(2) or (c)(3) of this section. The selected option must be consistent with that selected during the initial performance test described in § 63.1656(d)(2). Alternatively, the owner or operator may use the provisions of § 63.8(f) to request approval to use an alternative monitoring method.

(1) The owner or operator must check and record the control system fan motor amperes and capture system damper positions once per shift.

(2) The owner or operator must install, calibrate, and maintain a monitoring device that continuously records the volumetric flow rate through each separately ducted hood.

(3) The owner or operator must install, calibrate, and maintain a monitoring device that continuously records the volumetric flow rate at the inlet of the air pollution control device and must check and record the capture system damper positions once per shift.

(4) The flow rate monitoring devices must meet the following requirements:

(i) Be installed in an appropriate location in the exhaust duct such that reproducible flow rate monitoring will result.

(ii) Have an accuracy ±10 percent over its normal operating range and be

sfrattini on LAPJZKW1R2 with $$_JOB
VerDate Sep<11>2014 09:16 Apr 04, 2023 Jkt 256165 PO 00000 Frm 00266 Fmt 8010 Sfmt 8010 Q:\40\256165.XXX PC31

calibrated according to the manufacturer's instructions.

(5) The Administrator may require the owner or operator to demonstrate the accuracy of the monitoring device(s) relative to Methods 1 and 2 of appendix A of part 60 of this chapter.

(6) Failure to maintain the appropriate capture system parameters (fan motor amperes, flow rate, and/or damper positions) establishes the need to initiate corrective action as soon as practicable after the monitoring excursion in order to minimize excess emissions.

(7) Failure to monitor or failure to take corrective action under the requirements of paragraph (c) of this section would be a violation of the general duty to operate in a manner consistent with good air pollution control practices that minimizes emissions per §63.1652(f).

[64 FR 27458, May 20, 1999, as amended at 80 FR 37399, June 30, 2015]

§63.1658 Notification requirements.

(a) As required by §63.9(b) of subpart A, unless otherwise specified in this subpart, the owner or operator must submit the following written notifications to the Administrator:

(1) The owner or operator of an area source that subsequently becomes subject to the requirements of the standard must provide notification to the applicable permitting authority as required by §63.9(b)(1).

(2) As required by §63.9(b)(2), the owner or operator of an affected source that has an initial startup before the effective date of the standard must notify the Administrator that the source is subject to the requirements of the standard. The notification must be submitted no later than 120 calendar days after May 20, 1999 (or within 120 calendar days after the source becomes subject to this standard) and must contain the information specified in §63.9(b)(2)(i) through (b)(2)(v).

(3) As required by §63.9(b)(3), the owner or operator of a new or reconstructed affected source, or a source that has been reconstructed such that it is an affected source, that has an initial startup after the effective date and for which an application for approval of construction or reconstruction is not required under §63.5(d), must notify the Administrator in writing that the source is subject to the standards no later than 120 days after initial startup. The notification must contain the information specified in §63.9(b)(2)(i) through (b)(2)(v), delivered or postmarked with the notification required in §63.9(b)(5).

(4) As required by §63.9(b)(4), the owner or operator of a new or reconstructed major affected source that has an initial startup after the effective date of this standard and for which an application for approval of construction or reconstruction is required under §63.5(d) must provide the information specified in §63.9(b)(4)(i) through (b)(4)(v).

(5) As required by §63.9(b)(5), the owner or operator who, after the effective date of this standard, intends to construct a new affected source or reconstruct an affected source subject to this standard, or reconstruct a source such that it becomes an affected source subject to this standard, must notify the Administrator, in writing, of the intended construction or reconstruction.

(b) *Request for extension of compliance.* As required by §63.9(c), if the owner or operator of an affected source cannot comply with this standard by the applicable compliance date for that source, or if the owner or operator has installed BACT or technology to meet LAER consistent with §63.6(i)(5), he or she may submit to the Administrator (or the State with an approved permit program) a request for an extension of compliance as specified in §63.6(i)(4) through (i)(6).

(c) *Notification that source is subject to special compliance requirements.* As required by §63.9(d), an owner or operator of a new source that is subject to special compliance requirements as specified in §63.6(b)(3) and (b)(4) must notify the Administrator of his or her compliance obligations no later than the notification dates established in §63.9(b) for new sources that are not subject to the special provisions.

(d) *Notification of performance test.* As required by §63.9(e), the owner or operator of an affected source must notify the Administrator in writing of his or her intention to conduct a performance

sfrattini on LAPJZKW1R2 with $$_JOB
VerDate Sep<11>2014 09:16 Apr 04, 2023 Jkt 256165 PO 00000 Frm 00267 Fmt 8010 Sfmt 8010 Q:\40\256165.XXX PC31

test at least 30 calendar days before the performance test is scheduled to begin to allow the Administrator to review and approve the site-specific test plan required under § 63.7(c) and to have an observer present during the test.

(e) *Notification of opacity and visible emission observations.* As required by § 63.9(f), the owner or operator of an affected source must notify the Administrator in writing of the anticipated date for conducting the opacity or visible emission observations specified in § 63.6(h)(5). The notification must be submitted with the notification of the performance test date, as specified in paragraph (d) of this section, or if visibility or other conditions prevent the opacity or visible emission observations from being conducted concurrently with the initial performance test required under § 63.7, the owner or operator must deliver or postmark the notification not less than 30 days before the opacity or visible emission observations are scheduled to take place.

(f) *Notification of compliance status.* The owner or operator of an affected source must submit a notification of compliance status as required by § 63.9(h). The notification must be sent before the close of business on the 60th day following completion of the relevant compliance demonstration.

§ 63.1659 Reporting requirements.

(a) *General reporting requirements.* The owner or operator of a ferromanganese and silicomanganese production facility must comply with all of the reporting requirements under § 63.10 of subpart A, unless otherwise specified in this subpart.

(1) *Frequency of reports.* As provided by § 63.10(a)(5), if the owner or operator is required to submit periodic reports to a State on an established time line, he or she may change the dates by which periodic reports submitted under this part may be submitted (without changing the frequency of reporting) to be consistent with the State's schedule by mutual agreement between the owner or operator and the State. This provision may be applied at any point after the source's compliance date.

(2) *Reporting results of performance tests.* As required by § 63.10(d)(2), the owner or operator of an affected source must report the results of the initial performance test as part of the notification of compliance status required in § 63.1658(f).

(3) [Reserved]

(4) *Reporting malfunctions.* If a malfunction occurred during the reporting period, the report must include the number, duration and a brief description for each type of malfunction which occurred during the reporting period and which caused or may have caused any applicable emission limitation to be exceeded. The report must also include a description of actions taken by an owner or operator during a malfunction of an affected source to minimize emissions in accordance with § 63.1652(f), including actions taken to correct a malfunction.

(b) *Specific reporting requirements.* In addition to the information required under § 63.10, reports required under paragraph (a) of this section must include the information specified in paragraphs (b)(1) through (b)(5) of this section. As allowed by § 63.10(a)(3), if any State requires a report that contains all of the information required in a report listed in this section, an owner or operator may send the Administrator a copy of the report sent to the State to satisfy the requirements of this section for that report.

(1) *Air pollution control devices.* The owner or operator must submit reports that summarize the records maintained as part of the practices described in the maintenance plan for air pollution control devices required under § 63.1655(b), including an explanation of the periods when the procedures were not followed and the corrective actions taken.

(2) *Venturi scrubbers.* In addition to the information required to be submitted in paragraph (b)(1) of this section, the owner or operator must submit reports that identify the periods when the average hourly pressure drop of venturi scrubbers used to control particulate emissions dropped below the levels established in § 63.1656(c)(4), and an explanation of the corrective actions taken.

(3) *Fugitive dust.* The owner or operator must submit reports that explain the periods when the procedures outlined in the fugitive dust control plan

sfrattini on LAPJZKW1R2 with $$_JOB
VerDate Sep<11>2014 09:16 Apr 04, 2023 Jkt 256165 PO 00000 Frm 00268 Fmt 8010 Sfmt 8010 Q:\40\256165.XXX PC31

pursuant to §63.1654(a) were not followed and the corrective actions taken.

(4) *Capture system.* The owner or operator must submit reports that summarize the monitoring parameter excursions measured pursuant to §63.1657(c) and the corrective actions taken.

(5) *Bag leak detection system.* The owner or operator must submit reports including the following information:

(i) Records of all alarms.

(ii) Description of the actions taken following each bag leak detection system alarm.

(iii) Calculation of the percent of time the alarm on the bag leak detection system sounded during the reporting period.

(6) *Frequency of reports.* (i) The owner or operator must submit reports pursuant to §63.10(e)(3) that are associated with excess emissions events such as the excursion of the scrubber pressure drop limit per paragraph (b)(2) of this section. These reports are to be submitted on a quarterly basis, unless the owner or operator can satisfy the requirements in §63.10(e)(3) to reduce the frequency to a semiannual basis.

(ii) All other reports specified in paragraphs (b)(1) through (b)(5) of this section must be submitted semiannually.

[64 FR 27458, May 20, 1999, as amended at 80 FR 37399, June 30, 2015]

§63.1660 Recordkeeping requirements.

(a) *General recordkeeping requirements.* (1) The owner or operator of a ferromanganese and silicomanganese production facility must comply with all of the recordkeeping requirements under §63.10.

(2) As required by §63.10(b)(2), the owner or operator must maintain records for 5 years from the date of each record of:

(i) Records of the occurrence and duration of each malfunction of operation (*i.e.*, process equipment) or the air pollution control equipment and monitoring equipment;

(ii) Records of actions taken during periods of malfunction to minimize emissions in accordance with §63.1652(f), including corrective actions to restore malfunctioning process and air pollution control and monitoring equipment to its normal or usual manner of operation;

(iii) All maintenance performed on the air pollution control equipment;

(iv)–(v) [Reserved]

(vi) All required measurements needed to demonstrate compliance with the standard and to support data that the source is required to report, including, but not limited to, performance test measurements (including initial and any subsequent performance tests) and measurements as may be necessary to determine the conditions of the initial test or subsequent tests;

(vii) All results of initial or subsequent performance tests;

(viii) If the owner or operator has been granted a waiver from recordkeeping or reporting requirements under §63.10(f), any information demonstrating whether a source is meeting the requirements for a waiver of recordkeeping or reporting requirements;

(ix) If the owner or operator has been granted a waiver from the initial performance test under §63.7(h), a copy of the full request and the Administrator's approval or disapproval;

(x) All documentation supporting initial notifications and notifications of compliance status required by §63.9; and

(xi) As required by §63.10(b)(3), records of any applicability determination, including supporting analyses.

(b) *Specific recordkeeping requirements.* (1) In addition to the general records required by paragraph (a) of this section, the owner or operator must maintain records for 5 years from the date of each record of:

(i) Records of pressure drop across the venturi if a venturi scrubber is used.

(ii) Records of manufacturer certification that monitoring devices are accurate to within 5 percent (unless otherwise specified in this subpart) and of calibrations performed at the manufacturer's recommended frequency, or at a frequency consistent with good engineering practice, or as experience dictates.

(iii) Records of bag leak detection system output.

(iv) An identification of the date and time of all bag leak detection system

sfrattini on LAPJZKW1R2 with $$_JOB
VerDate Sep<11>2014 09:16 Apr 04, 2023 Jkt 256165 PO 00000 Frm 00269 Fmt 8010 Sfmt 8010 Q:\40\256165.XXX PC31

alarms, the time that procedures to determine the cause of the alarm were initiated, the cause of the alarm, an explanation of the actions taken, and the date and time the alarm was corrected.

(v) Copy of the written maintenance plan for each air pollution control device.

(vi) Copy of the fugitive dust control plan.

(vii) Records of each maintenance inspection and repair, replacement, or other corrective action.

(2) All records for the most recent 2 years of operation must be maintained on site. Records for the previous 3 years may be maintained off site.

[64 FR 27458, May 20, 1999, as amended at 80 FR 37400, June 30, 2015]

§ 63.1661 Implementation and enforcement.

(a) This subpart can be implemented and enforced by the U.S. EPA, or a delegated authority such as the applicable State, local, or Tribal agency. If the U.S. EPA Administrator has delegated authority to a State, local, or Tribal agency, then that agency, in addition to the U.S. EPA, has the authority to implement and enforce this subpart. Contact the applicable U.S. EPA Regional Office to find out if this subpart is delegated to a State, local, or Tribal agency.

(b) In delegating implementation and enforcement authority of this subpart to a State, local, or Tribal agency under subpart E of this part, the authorities contained in paragraph (c) of this section are retained by the Administrator of U.S. EPA and cannot be transferred to the State, local, or Tribal agency.

(c) The authorities that cannot be delegated to State, local, or Tribal agencies are as specified in paragraphs (c)(1) through (4) of this section.

(1) Approval of alternatives to requirements in §§ 63.1650 and 63.1652 through 63.1654.

(2) Approval of major alternatives to test methods under § 63.7(e)(2)(ii) and (f), as defined in § 63.90, and as required in this subpart.

(3) Approval of major alternatives to monitoring under § 63.8(f), as defined in § 63.90, and as required in this subpart.

(4) Approval of major alternatives to recordkeeping and reporting under § 63.10(f), as defined in § 63.90, and as required in this subpart.

[68 FR 37360, June 23, 2003]

§§ 63.1662–63.1679 [Reserved]

TABLE 1 TO SUBPART XXX OF PART 63—GENERAL PROVISIONS APPLICABILITY TO SUBPART XXX

Reference	Applies to subpart XXX	Comment
§ 63.1	Yes.	
§ 63.2	Yes.	
§ 63.3	Yes.	
§ 63.4	Yes.	
§ 63.5	Yes.	
§ 63.6(a), (b), (c)	Yes.	
§ 63.6(d)	No	Section reserved.
§ 63.6(e)(1)(i)	No	See §§ 63.1623(g) and 63.1652(f) for general duty requirement.
§ 63.6(e)(1)(ii)	No.	
§ 63.6(e)(1)(iii)	Yes.	
§ 63.6(e)(2)	No	Section reserved.
§ 63.6(e)(3)	No.	
§ 63.6(f)(1)	No.	
§ 63.6(f)(2)–(3)	Yes.	
§ 63.6(g)	Yes.	
§ 63.6(h)(1)	No.	
§ 63.6(h)(2)–(9)	Yes.	
§ 63.6(i)	Yes.	
§ 63.6(j)	Yes.	
§ 63.7(a)–(d)	Yes.	
§ 63.7(e)(1)	No	See §§ 63.1625(a)(5) and 63.1656(a)(6).
§ 63.7(e)(2)–(4)	Yes.	
§ 63.7(f), (g), (h)	Yes.	
§ 63.8(a)–(b)	Yes.	

sfrattini on LAPJZKW1R2 with $$_JOB
VerDate Sep<11>2014 09:16 Apr 04, 2023 Jkt 256165 PO 00000 Frm 00270 Fmt 8010 Sfmt 8002 Q:\40\256165.XXX PC31

Reference	Applies to subpart XXX	Comment
§63.8(c)(1)(i)	No	See §§63.1623(g) and 63.1652(f) for general duty requirement.
§63.8(c)(1)(ii)	Yes.	
§63.8(c)(1)(iii)	No.	
§63.8(c)(2)–(d)(2)	Yes.	
§63.8(d)(3)	Yes, except for last sentence.	SSM plans are not required.
§63.8(e)–(g)	Yes.	
§63.9(a),(b),(c),(e),(g),(h)(1) through (3), (h)(5) and (6), (i) and (j).	Yes.	
§63.9(f)	Yes.	
§63.9(h)(4)	No	Section reserved.
§63.9(k)	Yes	Only as specified in §63.9(j).
§63.10(a)	Yes.	
§63.10(b)(1)	Yes.	
§63.10(b)(2)(i)	No.	
§63.10(b)(2)(ii)	No	See §§63.1628 and 63.1660 for recordkeeping of (1) occurrence and duration and (2) actions taken during malfunction.
§63.10(b)(2)(iii)	Yes.	
§63.10(b)(2)(iv)–(v)	No.	
§63.10(b)(2)(vi)–(xiv)	Yes.	
§63.10)(b)(3)	Yes.	
§63.10(c)(1)–(9)	Yes.	
§63.10(c)(10)–(11)	No	See §§63.1628 and 63.1660 for malfunction recordkeeping requirements.
§63.10(c)(12)–(14)	Yes.	
§63.10(c)(15)	No.	
§63.10(d)(1)–(4)	Yes.	
§63.10(d)(5)	No	See §§63.1628(d)(8) and 63.1659(a)(4) for malfunction reporting requirements.
§63.10(e)–(f)	Yes.	
§63.11	No	Flares will not be used to comply with the emission limits.
§§63.12–63.15	Yes.	

[80 FR 37400, June 30, 2015, as amended at 85 FR 73902, Nov. 19, 2020]

Subpart AAAA—National Emission Standards for Hazardous Air Pollutants: Municipal Solid Waste Landfills

SOURCE: 85 FR 17261, Mar. 26, 2020, unless otherwise noted.

WHAT THIS SUBPART COVERS

§63.1930 What is the purpose of this subpart?

This subpart establishes national emission standards for hazardous air pollutants for existing and new municipal solid waste (MSW) landfills.

(a) Before September 28, 2021, all landfills described in §63.1935 must meet the requirements of 40 CFR part 60, subpart WWW, or an approved state or federal plan that implements 40 CFR part 60, subpart Cc, and requires timely control of bioreactors and additional reporting requirements. Landfills must also meet the startup, shutdown, and malfunction (SSM) requirements of the general provisions as specified in Table 1 to subpart AAAA of this part and must demonstrate compliance with the operating conditions by parameter monitoring results that are within the specified ranges. Specifically, landfills must meet the following requirements of this subpart that apply before September 28, 2021, as set out in: §§63.1955(a), 63.1955(b), 63.1965(a), 63.1965(c), 63.1975, 63.1981(a), 63.1981(b), and 63.1982, and the definitions of ''Controlled landfill'' and ''Deviation'' in §63.1990.

(b) Beginning no later than September 27, 2021, all landfills described in §63.1935 must meet the requirements of this subpart. A landfill may choose to meet the requirements of this subpart rather than the requirements identified in §63.1930(a) at any time before September 27, 2021. The requirements of this subpart apply at all times, including during periods of SSM, and the SSM requirements of the

sfrattini on LAPJZKW1R2 with $$_JOB
VerDate Sep<11>2014 09:16 Apr 04, 2023 Jkt 256165 PO 00000 Frm 00271 Fmt 8010 Sfmt 8010 Q:\40\256165.XXX PC31

General Provisions of this part do not apply.

§ 63.1935 Am I subject to this subpart?

You are subject to this subpart if you meet the criteria in paragraph (a) or (b) of this section.

(a) You are subject to this subpart if you own or operate an MSW landfill that has accepted waste since November 8, 1987, or has additional capacity for waste deposition and meets any one of the three criteria in paragraphs (a)(1) through (3) of this section:

(1) Your MSW landfill is a major source as defined in § 63.2 of subpart A.

(2) Your MSW landfill is collocated with a major source as defined in § 63.2 of subpart A.

(3) Your MSW landfill is an area source landfill that has a design capacity equal to or greater than 2.5 million megagrams (Mg) and 2.5 million cubic meters (m^3) and has estimated uncontrolled emissions equal to or greater than 50 megagrams per year (Mg/yr) NMOC as calculated according to § 63.1959.

(b) You are subject to this subpart if you own or operate an MSW landfill that has accepted waste since November 8, 1987, or has additional capacity for waste deposition, that includes a bioreactor, as defined in § 63.1990, and that meets any one of the criteria in paragraphs (b)(1) through (3) of this section:

(1) Your MSW landfill is a major source as defined in § 63.2 of subpart A.

(2) Your MSW landfill is collocated with a major source as defined in § 63.2 of subpart A.

(3) Your MSW landfill is an area source landfill that has a design capacity equal to or greater than 2.5 million Mg and 2.5 million m^3 and that is not permanently closed as of January 16, 2003.

§ 63.1940 What is the affected source of this subpart?

(a) An affected source of this subpart is an MSW landfill, as defined in § 63.1990, that meets the criteria in § 63.1935(a) or (b). The affected source includes the entire disposal facility in a contiguous geographic space where household waste is placed in or on land, including any portion of the MSW landfill operated as a bioreactor.

(b) A new affected source of this subpart is an affected source that commenced construction or reconstruction after November 7, 2000. An affected source is reconstructed if it meets the definition of reconstruction in § 63.2 of subpart A.

(c) An affected source of this subpart is existing if it is not new.

§ 63.1945 When do I have to comply with this subpart?

(a) If your landfill is a new affected source, you must comply with this subpart by January 16, 2003, or at the time you begin operating, whichever is later.

(b) If your landfill is an existing affected source, you must comply with this subpart by January 16, 2004.

§ 63.1947 When do I have to comply with this subpart if I own or operate a bioreactor?

You must comply with this subpart by the dates specified in § 63.1945(a) or (b). If you own or operate a bioreactor located at a landfill that is not permanently closed as of January 16, 2003, and has a design capacity equal to or greater than 2.5 million Mg and 2.5 million m^3, then you must install and operate a collection and control system that meets the criteria in § 63.1959(b)(2) according to the schedule specified in paragraph (a), (b), or (c) of this section.

(a) If your bioreactor is at a new affected source, then you must meet the requirements in paragraphs (a)(1) and (2) of this section:

(1) Install the gas collection and control system for the bioreactor before initiating liquids addition.

(2) Begin operating the gas collection and control system within 180 days after initiating liquids addition or within 180 days after achieving a moisture content of 40 percent by weight, whichever is later. If you choose to begin gas collection and control system operation 180 days after achieving a 40-percent moisture content instead of 180 days after liquids addition, use the procedures in §§ 63.1982(c) and (d) to determine when the bioreactor moisture content reaches 40 percent.

sfrattini on LAPJZKW1R2 with $$_JOB
VerDate Sep<11>2014 09:16 Apr 04, 2023 Jkt 256165 PO 00000 Frm 00272 Fmt 8010 Sfmt 8010 Q:\40\256165.XXX PC31

(b) If your bioreactor is at an existing affected source, then you must install and begin operating the gas collection and control system for the bioreactor by January 17, 2006, or by the date your bioreactor is required to install a gas collection and control system under 40 CFR part 60, subpart WWW; a federal plan; or an EPA-approved and effective state plan or tribal plan that applies to your landfill, whichever is earlier.

(c) If your bioreactor is at an existing affected source and you do not initiate liquids addition to your bioreactor until later than January 17, 2006, then you must meet the requirements in paragraphs (c)(1) and (2) of this section:

(1) Install the gas collection and control system for the bioreactor before initiating liquids addition.

(2) Begin operating the gas collection and control system within 180 days after initiating liquids addition or within 180 days after achieving a moisture content of 40 percent by weight, whichever is later. If you choose to begin gas collection and control system operation 180 days after achieving a 40-percent moisture content instead of 180 days after liquids addition, use the procedures in §§ 63.1982(c) and (d) to determine when the bioreactor moisture content reaches 40 percent.

[85 FR 17261, Mar. 26, 2020, as amended at 85 FR 64400, Oct. 13, 2020]

§ 63.1950 When am I no longer required to comply with this subpart?

You are no longer required to comply with the requirements of this subpart when your landfill meets the collection and control system removal criteria in § 63.1957(b).

§ 63.1952 When am I no longer required to comply with the requirements of this subpart if I own or operate a bioreactor?

If you own or operate a landfill that includes a bioreactor, you are no longer required to comply with the requirements of this subpart for the bioreactor provided you meet the conditions of either paragraph (a) or (b) of this section.

(a) Your affected source meets the control system removal criteria in § 63.1950 or the bioreactor meets the criteria for a nonproductive area of the landfill in § 63.1962(a)(3)(ii).

(b) The bioreactor portion of the landfill is a closed landfill as defined in § 63.1990, you have permanently ceased adding liquids to the bioreactor, and you have not added liquids to the bioreactor for at least 1 year. A closure report for the bioreactor must be submitted to the Administrator as provided in § 63.1981(g).

STANDARDS

§ 63.1955 What requirements must I meet?

(a) Before September 28, 2021, if alternatives to the operational standards, test methods, procedures, compliance measures, monitoring, recordkeeping, or reporting provisions have already been approved under 40 CFR part 60, subpart WWW; subpart XXX; a federal plan; or an EPA-approved and effective state or tribal plan, these alternatives can be used to comply with this subpart, except that all affected sources must comply with the SSM requirements in subpart A of this part as specified in Table 1 of this subpart and all affected sources must submit compliance reports every 6 months as specified in § 63.1981(h), including information on all deviations that occurred during the 6-month reporting period. Deviations for continuous emission monitors or numerical continuous parameter monitors must be determined using a 3-hour monitoring block average. Beginning no later than September 28, 2021, the collection and control system design plan may include for approval collection and control systems that include any alternatives to the operational standards, test methods, procedures, compliance measures, monitoring, recordkeeping, or reporting provisions, as provided in § 63.1981(d)(2).

(b) If you own or operate a bioreactor that is located at an MSW landfill that is not permanently closed and has a design capacity equal to or greater than 2.5 million Mg and 2.5 million m^3, then you must meet the requirements of this subpart, including requirements in paragraphs (b)(1) and (2) of this section.

sfrattini on LAPJZKW1R2 with $$_JOB
VerDate Sep<11>2014 09:16 Apr 04, 2023 Jkt 256165 PO 00000 Frm 00273 Fmt 8010 Sfmt 8010 Q:\40\256165.XXX PC31

(1) You must comply with this subpart starting on the date you are required to install the gas collection and control system.

(2) You must extend the collection and control system into each new cell or area of the bioreactor prior to initiating liquids addition in that area.

(c) At all times, beginning no later than September 27, 2021, the owner or operator must operate and maintain any affected source, including associated air pollution control equipment and monitoring equipment, in a manner consistent with safety and good air pollution control practices for minimizing emissions. The general duty to minimize emissions does not require the owner or operator to make any further efforts to reduce emissions if the requirements of this subpart have been achieved. Determination of whether a source is operating in compliance with operation and maintenance requirements will be based on information available to the Administrator which may include, but is not limited to, monitoring results, review of operation and maintenance procedures, review of operation and maintenance records, and inspection of the source.

§ 63.1957 Requirements for gas collection and control system installation and removal.

(a) *Operation*. Operate the collection and control device in accordance with the provisions of §§ 63.1958, 63.1960, and 63.1961.

(b) *Removal criteria*. The collection and control system may be capped, removed, or decommissioned if the following criteria are met:

(1) The landfill is a closed landfill (as defined in § 63.1990). A closure report must be submitted to the Administrator as provided in § 63.1981(f);

(2) The gas collection and control system has been in operation a minimum of 15 years or the landfill owner or operator demonstrates that the gas collection and control system will be unable to operate for 15 years due to declining gas flow; and

(3) Following the procedures specified in § 63.1959(c), the calculated NMOC emission rate at the landfill is less than 50 Mg/yr on three successive test dates. The test dates must be no less than 90 days apart, and no more than 180 days apart.

§ 63.1958 Operational standards for collection and control systems.

Each owner or operator of an MSW landfill with a gas collection and control system used to comply with the provisions of § 63.1957 must:

(a) Operate the collection system such that gas is collected from each area, cell, or group of cells in the MSW landfill in which solid waste has been in place for:

(1) 5 years or more if active; or

(2) 2 years or more if closed or at final grade;

(b) Operate the collection system with negative pressure at each wellhead except under the following conditions:

(1) A fire or increased well temperature. The owner or operator must record instances when positive pressure occurs in efforts to avoid a fire. These records must be submitted with the semi-annual reports as provided in § 63.1981(h);

(2) Use of a geomembrane or synthetic cover. The owner or operator must develop acceptable pressure limits in the design plan;

(3) A decommissioned well. A well may experience a static positive pressure after shut down to accommodate for declining flows. All design changes must be approved by the Administrator as specified in § 63.1981(d)(2);

(c) Operate each interior wellhead in the collection system as specified in 40 CFR 60.753(c), until the landfill owner or operator elects to meet the operational standard for temperature in paragraph (c)(1) of this section.

(1) Beginning no later than September 27, 2021, operate each interior wellhead in the collection system with a landfill gas temperature less than 62.8 degrees Celsius (145 degrees Fahrenheit).

(2) The owner or operator may establish a higher operating temperature value at a particular well. A higher operating value demonstration must be submitted to the Administrator for approval and must include supporting data demonstrating that the elevated

sfrattini on LAPJZKW1R2 with $$_JOB
VerDate Sep<11>2014 09:16 Apr 04, 2023 Jkt 256165 PO 00000 Frm 00274 Fmt 8010 Sfmt 8010 Q:\40\256165.XXX PC31

parameter neither causes fires nor significantly inhibits anaerobic decomposition by killing methanogens. The demonstration must satisfy both criteria in order to be approved (*i.e.*, neither causing fires nor killing methanogens is acceptable).

(d)(1) Operate the collection system so that the methane concentration is less than 500 parts per million (ppm) above background at the surface of the landfill. To determine if this level is exceeded, the owner or operator must conduct surface testing around the perimeter of the collection area and along a pattern that traverses the landfill at no more than 30-meter intervals and where visual observations indicate elevated concentrations of landfill gas, such as distressed vegetation and cracks or seeps in the cover. The owner or operator may establish an alternative traversing pattern that ensures equivalent coverage. A surface monitoring design plan must be developed that includes a topographical map with the monitoring route and the rationale for any site-specific deviations from the 30-meter intervals. Areas with steep slopes or other dangerous areas may be excluded from the surface testing.

(2) Beginning no later than September 27, 2021, the owner or operator must:

(i) Conduct surface testing using an organic vapor analyzer, flame ionization detector, or other portable monitor meeting the specifications provided in §63.1960(d).

(ii) Conduct surface testing at all cover penetrations. Thus, the owner or operator must monitor any cover penetrations that are within an area of the landfill where waste has been placed and a gas collection system is required.

(iii) Determine the latitude and longitude coordinates of each exceedance using an instrument with an accuracy of at least 4 meters. The coordinates must be in decimal degrees with at least five decimal places.

(e) Operate the system as specified in §60.753(e) of this chapter, except:

(1) Beginning no later than September 27, 2021, operate the system in accordance to §63.1955(c) such that all collected gases are vented to a control system designed and operated in compliance with §63.1959(b)(2)(iii). In the event the collection or control system is not operating:

(i) The gas mover system must be shut down and all valves in the collection and control system contributing to venting of the gas to the atmosphere must be closed within 1 hour of the collection or control system not operating; and

(ii) Efforts to repair the collection or control system must be initiated and completed in a manner such that downtime is kept to a minimum, and the collection and control system must be returned to operation.

(2) [Reserved]

(f) Operate the control system at all times when the collected gas is routed to the system.

(g) If monitoring demonstrates that the operational requirements in paragraph (b), (c), or (d) of this section are not met, corrective action must be taken as specified in §63.1960(a)(3) and (5) or (c). If corrective actions are taken as specified in §63.1960, the monitored exceedance is not a deviation of the operational requirements in this section.

[85 FR 17261, Mar. 26, 2020, as amended at 85 FR 64400, Oct. 13, 2020]

§63.1959 NMOC calculation procedures.

(a) Calculate the NMOC emission rate using the procedures specified in §60.754(a) of this chapter, except:

(1) *NMOC emission rate*. Beginning no later than September 27, 2021 the landfill owner or operator must calculate the NMOC emission rate using either Equation 1 provided in paragraph (a)(1)(i) of this section or Equation 2 provided in paragraph (a)(1)(ii) of this section. Both Equation 1 and Equation 2 may be used if the actual year-to-year solid waste acceptance rate is known, as specified in paragraph (a)(1)(i) of this section, for part of the life of the landfill and the actual year-to-year solid waste acceptance rate is unknown, as specified in paragraph (a)(1)(ii) of this section, for part of the life of the landfill. The values to be used in both Equation 1 and Equation 2 are 0.05 per year for k, 170 cubic meters per megagram (m^3/Mg) for L_O, and 4,000 parts per million by volume (ppmv) as

sfrattini on LAPJZKW1R2 with $$_JOB
VerDate Sep<11>2014 09:16 Apr 04, 2023 Jkt 256165 PO 00000 Frm 00275 Fmt 8010 Sfmt 8010 Q:\40\256165.XXX PC31

hexane for the C_{NMOC}. For landfills located in geographical areas with a 30-year annual average precipitation of less than 25 inches, as measured at the nearest representative official meteorologic site, the k value to be used is 0.02 per year.

(i)(A) Equation 1 must be used if the actual year-to-year solid waste acceptance rate is known.

$$M_{NMOC} = \sum_{i=1}^{n} 2\,k\,L_o M_i \left(e^{-kt_i}\right)(C_{NMOC})\,(3.6\text{x}10^{-9}) \quad \text{(Eq. 1)}$$

Where:

M_{NMOC} = Total NMOC emission rate from the landfill, Mg/yr.

k = Methane generation rate constant, year−1.

L_o = Methane generation potential, m^3/Mg solid waste.

M_i = Mass of solid waste in the ith section, Mg.

t_i = Age of the ith section, years.

C_{NMOC} = Concentration of NMOC, ppmv as hexane.

$3.6 \times 10-9$ = Conversion factor.

(B) The mass of nondegradable solid waste may be subtracted from the total mass of solid waste in a particular section of the landfill when calculating the value for M_i if documentation of the nature and amount of such wastes is maintained.

(ii)(A) Equation 2 must be used if the actual year-to-year solid waste acceptance rate is unknown.

$$M_{NMOC} = 2L_oR\,(e^{-kc} - e^{-kt})\,C_{NMOC}(3.6 \times 10^{-9}) \quad \text{(Eq. 2)}$$

Where:

M_{NMOC} = Mass emission rate of NMOC, Mg/yr.

L_o = Methane generation potential, m^3/Mg solid waste.

R = Average annual acceptance rate, Mg/yr.

k = Methane generation rate constant, $year^{-1}$.

t = Age of landfill, years.

C_{NMOC} = Concentration of NMOC, ppmv as hexane.

c = Time since closure, years; for active landfill c=0 and $e^{-kc} = 1$.

3.6×10^{-9} = Conversion factor.

(B) The mass of nondegradable solid waste may be subtracted from the total mass of solid waste in a particular section of the landfill when calculating the value of R, if documentation of the nature and amount of such wastes is maintained.

(2) *Tier 1.* The owner or operator must compare the calculated NMOC mass emission rate to the standard of 50 Mg/yr.

(i) If the NMOC emission rate calculated in paragraph (a)(1) of this section is less than 50 Mg/yr, then the landfill owner or operator must submit an NMOC emission rate report according to § 63.1981(c) and must recalculate the NMOC mass emission rate annually as required under paragraph (b) of this section.

(ii) If the calculated NMOC emission rate as calculated in paragraph (a)(1) of this section is equal to or greater than 50 Mg/yr, then the landfill owner must either:

(A) Submit a gas collection and control system design plan within 1 year as specified in § 63.1981(d) and install and operate a gas collection and control system within 30 months of the first annual report in which the NMOC emission rate equals or exceeds 50 Mg/yr, according to paragraphs (b)(2)(ii) and (iii) of this section;

(B) Determine a site-specific NMOC concentration and recalculate the NMOC emission rate using the Tier 2 procedures provided in paragraph (a)(3) of this section; or

(C) Determine a site-specific methane generation rate constant and recalculate the NMOC emission rate using the Tier 3 procedures provided in paragraph (a)(4) of this section.

(3) *Tier 2.* The landfill owner or operator must determine the site-specific

sfrattini on LAPJZKW1R2 with $$_JOB
VerDate Sep<11>2014 09:16 Apr 04, 2023 Jkt 256165 PO 00000 Frm 00276 Fmt 8010 Sfmt 8010 Q:\40\256165.XXX PC31
ER26MR20.007</GPH> ER26MR20.011</GPH>

NMOC concentration using the following sampling procedure. The landfill owner or operator must install at least two sample probes per hectare, evenly distributed over the landfill surface that has retained waste for at least 2 years. If the landfill is larger than 25 hectares in area, only 50 samples are required. The probes should be evenly distributed across the sample area. The sample probes should be located to avoid known areas of nondegradable solid waste. The owner or operator must collect and analyze one sample of landfill gas from each probe to determine the NMOC concentration using EPA Method 25 or 25C of appendix A–7 to part 60. Taking composite samples from different probes into a single cylinder is allowed; however, equal sample volumes must be taken from each probe. For each composite, the sampling rate, collection times, beginning and ending cylinder vacuums, or alternative volume measurements must be recorded to verify that composite volumes are equal. Composite sample volumes should not be less than one liter unless evidence can be provided to substantiate the accuracy of smaller volumes. Terminate compositing before the cylinder approaches ambient pressure where measurement accuracy diminishes. If more than the required number of samples are taken, all samples must be used in the analysis. The landfill owner or operator must divide the NMOC concentration from EPA Method 25 or 25C of appendix A–7 to part 60 by 6 to convert from C_{NMOC} as carbon to C_{NMOC} as hexane. If the landfill has an active or passive gas removal system in place, EPA Method 25 or 25C samples may be collected from these systems instead of surface probes provided the removal system can be shown to provide sampling as representative as the two sampling probe per hectare requirement. For active collection systems, samples may be collected from the common header pipe. The sample location on the common header pipe must be before any gas moving, condensate removal, or treatment system equipment. For active collection systems, a minimum of three samples must be collected from the header pipe.

(i) Within 60 days after the date of completing each performance test (as defined in §63.7 of subpart A), the owner or operator must submit the results according to §63.1981(l)(1).

(ii) The landfill owner or operator must recalculate the NMOC mass emission rate using Equation 1 or Equation 2 provided in paragraph (a)(1)(i) or (ii) of this section and use the average site-specific NMOC concentration from the collected samples instead of the default value provided in paragraph (a)(1) of this section.

(iii) If the resulting NMOC mass emission rate is less than 50 Mg/yr, then the owner or operator must submit a periodic estimate of NMOC emissions in an NMOC emission rate report according to §63.1981(c) and must recalculate the NMOC mass emission rate annually as required under paragraph (b) of this section. The site-specific NMOC concentration must be retested every 5 years using the methods specified in this section.

(iv) If the NMOC mass emission rate as calculated using the Tier 2 site-specific NMOC concentration is equal to or greater than 50 Mg/yr, the landfill owner or operator must either:

(A) Submit a gas collection and control system design plan within 1 year as specified in §63.1981(d) and install and operate a gas collection and control system within 30 months according to paragraphs (b)(2)(ii) and (iii) of this section; or

(B) Determine a site-specific methane generation rate constant and recalculate the NMOC emission rate using the site-specific methane generation rate using the Tier 3 procedures specified in paragraph (a)(4) of this section.

(4) *Tier 3.* The site-specific methane generation rate constant must be determined using the procedures provided in EPA Method 2E of appendix A–1 to part 60 of this chapter. The landfill owner or operator must estimate the NMOC mass emission rate using Equation 1 or Equation 2 in paragraph (a)(1)(i) or (ii) of this section and using a site-specific methane generation rate constant, and the site-specific NMOC concentration as determined in paragraph (a)(3) of this section instead of the default values provided in paragraph (a)(1) of this section. The landfill

sfrattini on LAPJZKW1R2 with $$_JOB
VerDate Sep<11>2014 09:16 Apr 04, 2023 Jkt 256165 PO 00000 Frm 00277 Fmt 8010 Sfmt 8010 Q:\40\256165.XXX PC31

owner or operator must compare the resulting NMOC mass emission rate to the standard of 50 Mg/yr.

(i) If the NMOC mass emission rate as calculated using the Tier 2 site-specific NMOC concentration and Tier 3 site-specific methane generation rate is equal to or greater than 50 Mg/yr, the owner or operator must:

(A) Submit a gas collection and control system design plan within 1 year as specified in § 63.1981(d) and install and operate a gas collection and control system within 30 months of the first annual report in which the NMOC emission rate equals or exceeds 50 Mg/yr, according to paragraphs (b)(2)(ii) and (iii) of this section.

(B) [Reserved]

(ii) If the NMOC mass emission rate is less than 50 Mg/yr, then the owner or operator must recalculate the NMOC mass emission rate annually using Equation 1 or Equation 2 in paragraph (a)(1) of this section and using the site-specific Tier 2 NMOC concentration and Tier 3 methane generation rate constant and submit a periodic NMOC emission rate report as provided in § 63.1981(c). The calculation of the methane generation rate constant is performed only once, and the value obtained from this test must be used in all subsequent annual NMOC emission rate calculations.

(5) *Other methods.* The owner or operator may use other methods to determine the NMOC concentration or a site-specific methane generation rate constant as an alternative to the methods required in paragraphs (a)(3) and (4) of this section if the method has been approved by the Administrator.

(b) Each owner or operator of an affected source having a design capacity equal to or greater than 2.5 million Mg and 2.5 million m^3 must either comply with paragraph (b)(2) of this section or calculate an NMOC emission rate for the landfill using the procedures specified in paragraph (a) of this section. The NMOC emission rate must be recalculated annually, except as provided in § 63.1981(c)(1)(ii)(A).

(1) If the calculated NMOC emission rate is less than 50 Mg/yr, the owner or operator must:

(i) Submit an annual NMOC emission rate emission report to the Administrator, except as provided for in § 63.1981(c)(1)(ii); and

(ii) Recalculate the NMOC emission rate annually using the procedures specified in paragraph (a)(1) of this section until such time as the calculated NMOC emission rate is equal to or greater than 50 Mg/yr, or the landfill is closed.

(A) If the calculated NMOC emission rate, upon initial calculation or annual recalculation required in paragraph (b) of this section, is equal to or greater than 50 Mg/yr, the owner or operator must either: comply with paragraph (b)(2) of this section or calculate NMOC emissions using the next higher tier in paragraph (a) of this section.

(B) If the landfill is permanently closed, a closure report must be submitted to the Administrator as provided for in § 63.1981(f).

(2) If the calculated NMOC emission rate is equal to or greater than 50 Mg/yr using Tier 1, 2, or 3 procedures, the owner or operator must either:

(i) Submit a collection and control system design plan prepared by a professional engineer to the Administrator within 1 year as specified in § 63.1981(d) or calculate NMOC emissions using the next higher tier in paragraph (a) of this section. The collection and control system must meet the requirements in paragraphs (b)(2)(ii) and (iii) of this section.

(ii) Collection system. Install and start up a collection and control system that captures the gas generated within the landfill as required by paragraphs (b)(2)(ii)(B) or (C) and (b)(2)(iii) of this section within 30 months after:

(A) The first annual report in which the NMOC emission rate equals or exceeds 50 Mg/yr, unless Tier 2 or Tier 3 sampling demonstrates that the NMOC emission rate is less than 50 Mg.

(B) An active collection system must:

(*1*) Be designed to handle the maximum expected gas flow rate from the entire area of the landfill that warrants control over the intended use period of the gas control system equipment;

(*2*) Collect gas from each area, cell, or group of cells in the landfill in which the initial solid waste has been placed for a period of 5 years or more if

sfrattini on LAPJZKW1R2 with $$_JOB
VerDate Sep<11>2014 09:16 Apr 04, 2023 Jkt 256165 PO 00000 Frm 00278 Fmt 8010 Sfmt 8010 Q:\40\256165.XXX PC31

active; or 2 years or more if closed or at final grade;

(*3*) Collect gas at a sufficient extraction rate; and

(*4*) Be designed to minimize off-site migration of subsurface gas.

(C) A passive collection system must:

(*1*) Comply with the provisions specified in paragraphs (b)(2)(ii)(B)(1), (2), and (3) of this section; and

(*2*) Be installed with liners on the bottom and all sides in all areas in which gas is to be collected. The liners must be installed as required under §258.40 of this chapter.

(iii) Control system. Route all the collected gas to a control system that complies with the requirements in either paragraph (b)(2)(iii)(A), (B), or (C) of this section.

(A) A non-enclosed flare designed and operated in accordance with the parameters established in §63.11(b) except as noted in paragraph (e) of this section; or

(B) A control system designed and operated to reduce NMOC by 98 weight-percent, or, when an enclosed combustion device is used for control, to either reduce NMOC by 98 weight-percent or reduce the outlet NMOC concentration to less than 20 ppmv, dry basis as hexane at 3-percent oxygen. The reduction efficiency or ppmv must be established by an initial performance test to be completed no later than 180 days after the initial startup of the approved control system using the test methods specified in paragraph (e) of this section. The performance test is not required for boilers and process heaters with design heat input capacities equal to or greater than 44 megawatts that burn landfill gas for compliance with this subpart.

(*1*) If a boiler or process heater is used as the control device, the landfill gas stream must be introduced into the flame zone.

(*2*) The control device must be operated within the parameter ranges established during the initial or most recent performance test. The operating parameters to be monitored are specified in §§63.1961(b) through (e);

(C) A treatment system that processes the collected gas for subsequent sale or beneficial use such as fuel for combustion, production of vehicle fuel, production of high-British thermal unit (Btu) gas for pipeline injection, or use as a raw material in a chemical manufacturing process. Venting of treated landfill gas to the ambient air is not allowed. If the treated landfill gas cannot be routed for subsequent sale or beneficial use, then the treated landfill gas must be controlled according to either paragraph (b)(2)(iii)(A) or (B) of this section.

(D) All emissions from any atmospheric vent from the gas treatment system are subject to the requirements of paragraph (b)(2)(iii)(A) or (B) of this section. For purposes of this subpart, atmospheric vents located on the condensate storage tank are not part of the treatment system and are exempt from the requirements of paragraph (b)(2)(iii)(A) or (B) of this section.

(c) After the installation and startup of a collection and control system in compliance with this subpart, the owner or operator must calculate the NMOC emission rate for purposes of determining when the system can be capped, removed, or decommissioned as provided in §63.1957(b)(3), using Equation 3:

$$MNMOC = 1.89 \times 10^{-3} Q_{LFG} C_{NMOC} \text{ (Eq. 3)}$$

Where:

M_{NMOC} = Mass emission rate of NMOC, Mg/yr.

Q_{LFG} = Flow rate of landfill gas, m^3 per minute.

C_{NMOC} = Average NMOC concentration, ppmv as hexane.

1.89×10^{-3} = Conversion factor.

(1) The flow rate of landfill gas, Q_{LFG}, must be determined by measuring the total landfill gas flow rate at the common header pipe that leads to the control system using a gas flow measuring device calibrated according to the provisions of section 10 of EPA Method 2E of appendix A–1 of part 60.

sfrattini on LAPJZKW1R2 with $$_JOB
VerDate Sep<11>2014 09:16 Apr 04, 2023 Jkt 256165 PO 00000 Frm 00279 Fmt 8010 Sfmt 8010 Q:\40\256165.XXX PC31
ER26MR20.009</GPH>

(2) The average NMOC concentration, C_{NMOC}, must be determined by collecting and analyzing landfill gas sampled from the common header pipe before the gas moving or condensate removal equipment using the procedures in EPA Method 25 or 25C of appendix A–7 to part 60 of this chapter. The sample location on the common header pipe must be before any condensate removal or other gas refining units. The landfill owner or operator must divide the NMOC concentration from EPA Method 25 or 25C of appendix A–7 to part 60 by 6 to convert from C_{NMOC} as carbon to C_{NMOC} as hexane.

(3) The owner or operator may use another method to determine landfill gas flow rate and NMOC concentration if the method has been approved by the Administrator.

(i) Within 60 days after the date of completing each performance test (as defined in § 63.7), the owner or operator must submit the results of the performance test, including any associated fuel analyses, according to § 63.1981(l)(1).

(ii) [Reserved]

(d) For the performance test required in § 63.1959(b)(2)(iii)(B), EPA Method 25 or 25C (EPA Method 25C of appendix A–7 to part 60 of this chapter may be used at the inlet only) of appendix A of this part must be used to determine compliance with the 98 weight-percent efficiency or the 20- ppmv outlet concentration level, unless another method to demonstrate compliance has been approved by the Administrator as provided by § 63.1981(d)(2). EPA Method 3, 3A, or 3C of appendix A–7 to part 60 must be used to determine oxygen for correcting the NMOC concentration as hexane to 3 percent. In cases where the outlet concentration is less than 50 ppm NMOC as carbon (8 ppm NMOC as hexane), EPA Method 25A should be used in place of EPA Method 25. EPA Method 18 may be used in conjunction with EPA Method 25A on a limited basis (compound specific, *e.g.*, methane) or EPA Method 3C may be used to determine methane. The methane as carbon should be subtracted from the EPA Method 25A total hydrocarbon value as carbon to give NMOC concentration as carbon. The landowner or operator must divide the NMOC concentration as carbon by 6 to convert from the C_{NMOC} as carbon to C_{NMOC} as hexane. Equation 4 must be used to calculate efficiency:

$$\text{Control Efficiency} = (NMOC_{in} - NMOC_{out})/(NMOC_{in}) \qquad \text{(Eq. 4)}$$

Where:

$NMOC_{in}$ = Mass of NMOC entering control device.

$NMOC_{out}$ = Mass of NMOC exiting control device.

(e) For the performance test required in § 63.1959(b)(2)(iii)(A), the net heating value of the combusted landfill gas as determined in § 63.11(b)(6)(ii) is calculated from the concentration of methane in the landfill gas as measured by EPA Method 3C of appendix A to part 60 of this chapter. A minimum of three 30-minute EPA Method 3C samples are determined. The measurement of other organic components, hydrogen, and carbon monoxide is not applicable. EPA Method 3C may be used to determine the landfill gas molecular weight for calculating the flare gas exit velocity under § 63.11(b)(7) of subpart A.

(1) Within 60 days after the date of completing each performance test (as defined in § 63.7), the owner or operator must submit the results of the performance tests, including any associated fuel analyses, required by § 63.1959(c) or (e) according to § 63.1981(l)(1).

(2) [Reserved]

(f) The performance tests required in §§ 63.1959(b)(2)(iii)(A) and (B), must be conducted under such conditions as the Administrator specifies to the owner or operator based on representative performance of the affected source for the period being tested. Representative conditions exclude periods of startup and shutdown unless specified by the Administrator. The owner or operator

sfrattini on LAPJZKW1R2 with $$_JOB
VerDate Sep<11>2014 09:16 Apr 04, 2023 Jkt 256165 PO 00000 Frm 00280 Fmt 8010 Sfmt 8010 Q:\40\256165.XXX PC31
ER26MR20.012</GPH>

may not conduct performance tests during periods of malfunction. The owner or operator must record the process information that is necessary to document operating conditions during the test and include in such record an explanation to support that such conditions represent normal operation. Upon request, the owner or operator shall make available to the Administrator such records as may be necessary to determine the conditions of performance tests.

[85 FR 17261, Mar. 26, 2020, as amended at 85 FR 64400, Oct. 13, 2020]

§63.1960 Compliance provisions.

(a) Except as provided in §63.1981(d)(2), the specified methods in paragraphs (a)(1) through (5) of this section must be used to determine whether the gas collection system is in compliance with §63.1959(b)(2)(ii).

(1) For the purposes of calculating the maximum expected gas generation flow rate from the landfill to determine compliance with §63.1959(b)(2)(ii)(C)(1), either Equation 5 or Equation 6 must be used. The owner or operator may use another method to determine the maximum gas generation flow rate, if the method has been approved by the Administrator. The methane generation rate constant (k) and methane generation potential (L_o) kinetic factors should be those published in the most recent *Compilation of Air Pollutant Emission Factors* (AP–42) or other site-specific values demonstrated to be appropriate and approved by the Administrator. If k has been determined as specified in §63.1959(a)(4), the value of k determined from the test must be used. A value of no more than 15 years must be used for the intended use period of the gas mover equipment. The active life of the landfill is the age of the landfill plus the estimated number of years until closure.

(i) For sites with unknown year-to-year solid waste acceptance rate:

$$Qm = 2L_oR\,(e^{-kc} - e^{-kt}) \quad \text{(Eq. 5)}$$

Where:

Qm = Maximum expected gas generation flow rate, m^3/yr.

L_o = Methane generation potential, m^3/Mg solid waste.

R = Average annual acceptance rate, Mg/yr.

k = Methane generation rate constant, $year^{-1}$.

t = Age of the landfill at equipment installation plus the time the owner or operator intends to use the gas mover equipment or active life of the landfill, whichever is less. If the equipment is installed after closure, t is the age of the landfill at installation, years.

c = Time since closure, years (for an active landfill c = 0 and $e^{-kc} = 1$).

2 = Constant.

(ii) For sites with known year-to-year solid waste acceptance rate:

$$Q_M = \sum_{i=1}^{n} 2kL_oM_i\left(e^{-kt_i}\right) \quad \text{(Eq. 6)}$$

Where:

Qm = Maximum expected gas generation flow rate, m^3/yr.

k = Methane generation rate constant, $year^{-1}$.

L_o = Methane generation potential, m^3/Mg solid waste.

M_i = Mass of solid waste in the ith section, Mg.

t_i = Age of the ith section, years.

(iii) If a collection and control system has been installed, actual flow data may be used to project the maximum expected gas generation flow rate instead of, or in conjunction with, Equation 5 or Equation 6 in paragraphs (a)(1)(i) and (ii) of this section. If the landfill is still accepting waste, the actual measured flow data will not equal the maximum expected gas generation rate, so calculations using Equation 5

sfrattini on LAPJZKW1R2 with $$_JOB
VerDate Sep<11>2014 09:16 Apr 04, 2023 Jkt 256165 PO 00000 Frm 00281 Fmt 8010 Sfmt 8010 Q:\40\256165.XXX PC31
ER26MR20.013</GPH> ER26MR20.008</GPH>

or Equation 6 in paragraph (a)(1)(i) or (ii) of this section or other methods must be used to predict the maximum expected gas generation rate over the intended period of use of the gas control system equipment.

(2) For the purposes of determining sufficient density of gas collectors for compliance with § 63.1959(b)(2)(ii)(B)(*2*), the owner or operator must design a system of vertical wells, horizontal collectors, or other collection devices, satisfactory to the Administrator, capable of controlling and extracting gas from all portions of the landfill sufficient to meet all operational and performance standards.

(3) For the purpose of demonstrating whether the gas collection system flow rate is sufficient to determine compliance with § 63.1959(b)(2)(ii)(B)(*3*), the owner or operator must measure gauge pressure in the gas collection header applied to each individual well monthly. Any attempted corrective measure must not cause exceedances of other operational or performance standards. An alternative timeline for correcting the exceedance may be submitted to the Administrator for approval. If a positive pressure exists, follow the procedures as specified in § 60.755(a)(3), except:

(i) Beginning no later than September 27, 2021, if a positive pressure exists, action must be initiated to correct the exceedance within 5 days, except for the three conditions allowed under § 63.1958(b).

(A) If negative pressure cannot be achieved without excess air infiltration within 15 days of the first measurement of positive pressure, the owner or operator must conduct a root cause analysis and correct the exceedance as soon as practicable, but no later than 60 days after positive pressure was first measured. The owner or operator must keep records according to § 63.1983(e)(3).

(B) If corrective actions cannot be fully implemented within 60 days following the positive pressure measurement for which the root cause analysis was required, the owner or operator must also conduct a corrective action analysis and develop an implementation schedule to complete the corrective action(s) as soon as practicable, but no more than 120 days following the positive pressure measurement. The owner or operator must submit the items listed in § 63.1981(h)(7) as part of the next semi-annual report. The owner or operator must keep records according to § 63.1983(e)(4).

(C) If corrective action is expected to take longer than 120 days to complete after the initial exceedance, the owner or operator must submit the root cause analysis, corrective action analysis, and corresponding implementation timeline to the Administrator, according to § 63.1981(j). The owner or operator must keep records according to § 63.1983(e)(5).

(ii) [Reserved]

(4) Where an owner or operator subject to the provisions of this subpart seeks to demonstrate compliance with the temperature and nitrogen or oxygen operational standards in introductory paragraph § 63.1958(c), for the purpose of identifying whether excess air infiltration into the landfill is occurring, the owner or operator must follow the procedures as specified in § 60.755(a)(5) of this chapter, except:

(i) Once an owner or operator subject to the provisions of this subpart seeks to demonstrate compliance with the operational standard for temperature in § 63.1958(c)(1), the owner or operator must monitor each well monthly for temperature for the purpose of identifying whether excess air infiltration exists. If a well exceeds the operating parameter for temperature as provided in § 63.1958(c)(1), action must be initiated to correct the exceedance within 5 days. Any attempted corrective measure must not cause exceedances of other operational or performance standards.

(A) If a landfill gas temperature less than or equal to 62.8 degrees Celsius (145 degrees Fahrenheit) cannot be achieved within 15 days of the first measurement of landfill gas temperature greater than 62.8 degrees Celsius (145 degrees Fahrenheit), the owner or operator must conduct a root cause analysis and correct the exceedance as soon as practicable, but no later than 60 days after a landfill gas temperature greater than 62.8 degrees Celsius (145 degrees Fahrenheit) was first measured. The owner or operator must keep records according to § 63.1983(e)(3).

sfrattini on LAPJZKW1R2 with $$_JOB
VerDate Sep<11>2014 09:16 Apr 04, 2023 Jkt 256165 PO 00000 Frm 00282 Fmt 8010 Sfmt 8010 Q:\40\256165.XXX PC31

(B) If corrective actions cannot be fully implemented within 60 days following the temperature measurement for which the root cause analysis was required, the owner or operator must also conduct a corrective action analysis and develop an implementation schedule to complete the corrective action(s) as soon as practicable, but no more than 120 days following the measurement of landfill gas temperature greater than 62.8 degrees Celsius (145 degrees Fahrenheit). The owner or operator must submit the items listed in §63.1981(h)(7) as part of the next semiannual report. The owner or operator must keep records according to §63.1983(e)(4).

(C) If corrective action is expected to take longer than 120 days to complete after the initial exceedance, the owner or operator must submit the root cause analysis, corrective action analysis, and corresponding implementation timeline to the Administrator, according to §63.1981(h)(7) and (j). The owner or operator must keep records according to §63.1983(e)(5).

(D) If a landfill gas temperature measured at either the wellhead or at any point in the well is greater than or equal to 76.7 degrees Celsius (170 degrees Fahrenheit) and the carbon monoxide concentration measured, according to the procedures in §63.1961(a)(5)(vi) is greater than or equal to 1,000 ppmv the corrective action(s) for the wellhead temperature standard (62.8 degrees Celsius or 145 degrees Fahrenheit) must be completed within 15 days.

(5) An owner or operator seeking to demonstrate compliance with §63.1959(b)(2)(ii)(B)(*4*) through the use of a collection system not conforming to the specifications provided in §63.1962 must provide information satisfactory to the Administrator as specified in §63.1981(d)(3) demonstrating that off-site migration is being controlled.

(b) For purposes of compliance with §63.1958(a), each owner or operator of a controlled landfill must place each well or design component as specified in the approved design plan as provided in §63.1981(d). Each well must be installed no later than 60 days after the date on which the initial solid waste has been in place for a period of:

(1) 5 years or more if active; or

(2) 2 years or more if closed or at final grade.

(c) The following procedures must be used for compliance with the surface methane operational standard as provided in §63.1958(d).

(1) After installation and startup of the gas collection system, the owner or operator must monitor surface concentrations of methane along the entire perimeter of the collection area and along a pattern that traverses the landfill at 30 meter intervals (or a site-specific established spacing) for each collection area on a quarterly basis using an organic vapor analyzer, flame ionization detector, or other portable monitor meeting the specifications provided in paragraph (d) of this section.

(2) The background concentration must be determined by moving the probe inlet upwind and downwind outside the boundary of the landfill at a distance of at least 30 meters from the perimeter wells.

(3) Surface emission monitoring must be performed in accordance with section 8.3.1 of EPA Method 21 of appendix A–7 of part 60 of this chapter, except that the probe inlet must be placed within 5 to 10 centimeters of the ground. Monitoring must be performed during typical meteorological conditions.

(4) Any reading of 500 ppm or more above background at any location must be recorded as a monitored exceedance and the actions specified in paragraphs (c)(4)(i) through (v) of this section must be taken. As long as the specified actions are taken, the exceedance is not a violation of the operational requirements of §63.1958(d).

(i) The location of each monitored exceedance must be marked and the location and concentration recorded. Beginning no later than September 27, 2021, the location must be recorded using an instrument with an accuracy of at least 4 meters. The coordinates must be in decimal degrees with at least five decimal places.

(ii) Cover maintenance or adjustments to the vacuum of the adjacent wells to increase the gas collection in

sfrattini on LAPJZKW1R2 with $$_JOB
VerDate Sep<11>2014 09:16 Apr 04, 2023 Jkt 256165 PO 00000 Frm 00283 Fmt 8010 Sfmt 8010 Q:\40\256165.XXX PC31

the vicinity of each exceedance must be made and the location must be re-monitored within 10 days of detecting the exceedance.

(iii) If the re-monitoring of the location shows a second exceedance, additional corrective action must be taken and the location must be monitored again within 10 days of the second exceedance. If the re-monitoring shows a third exceedance for the same location, the action specified in paragraph (c)(4)(v) of this section must be taken, and no further monitoring of that location is required until the action specified in paragraph (c)(4)(v) of this section has been taken.

(iv) Any location that initially showed an exceedance but has a methane concentration less than 500 ppm methane above background at the 10-day re-monitoring specified in paragraph (c)(4)(ii) or (iii) of this section must be re-monitored 1 month from the initial exceedance. If the 1-month re-monitoring shows a concentration less than 500 ppm above background, no further monitoring of that location is required until the next quarterly monitoring period. If the 1-month re-monitoring shows an exceedance, the actions specified in paragraph (c)(4)(iii) or (v) of this section must be taken.

(v) For any location where monitored methane concentration equals or exceeds 500 ppm above background three times within a quarterly period, a new well or other collection device must be installed within 120 days of the initial exceedance. An alternative remedy to the exceedance, such as upgrading the blower, header pipes or control device, and a corresponding timeline for installation may be submitted to the Administrator for approval.

(5) The owner or operator must implement a program to monitor for cover integrity and implement cover repairs as necessary on a monthly basis.

(d) Each owner or operator seeking to comply with the provisions in paragraph (c) of this section must comply with the following instrumentation specifications and procedures for surface emission monitoring devices:

(1) The portable analyzer must meet the instrument specifications provided in section 6 of EPA Method 21 of appendix A of part 60 of this chapter, except that ''methane'' replaces all references to ''VOC''.

(2) The calibration gas must be methane, diluted to a nominal concentration of 500 ppm in air.

(3) To meet the performance evaluation requirements in section 8.1 of EPA Method 21 of appendix A of part 60 of this chapter, the instrument evaluation procedures of section 8.1 of EPA Method 21 of appendix A of part 60 must be used.

(4) The calibration procedures provided in sections 8 and 10 of EPA Method 21 of appendix A of part 60 of this chapter must be followed immediately before commencing a surface monitoring survey.

(e)(1) Where an owner or operator subject to the provisions of this subpart seeks to demonstrate compliance with the operational standards in introductory paragraph § 63.1958(e), the provisions of this subpart apply at all times, except during periods of SSM, provided that the duration of SSM does not exceed 5 days for collection systems and does not exceed 1 hour for treatment or control devices. You must comply with the provisions in Table 1 to subpart AAAA that apply before September 28, 2021.

(2) Once an owner or operator subject to the provisions of this subpart seeks to demonstrate compliance with the operational standard in § 63.1958(e)(1), the provisions of this subpart apply at all times, including periods of SSM. During periods of SSM, you must comply with the work practice requirement specified in § 63.1958(e) in lieu of the compliance provisions in § 63.1960.

[85 FR 17261, Mar. 26, 2020, as amended at 85 FR 64400, Oct. 13, 2020; 87 FR 8203, Feb. 14, 2022]

§ 63.1961 Monitoring of operations.

Except as provided in § 63.1981(d)(2):

(a) Each owner or operator seeking to comply with § 63.1959(b)(2)(ii)(B) for an active gas collection system must install a sampling port and a thermometer, other temperature measuring device, or an access port for temperature measurements at each wellhead and:

(1) Measure the gauge pressure in the gas collection header on a monthly basis as provided in § 63.1960(a)(3); and

sfrattini on LAPJZKW1R2 with $$_JOB
VerDate Sep<11>2014 09:16 Apr 04, 2023 Jkt 256165 PO 00000 Frm 00284 Fmt 8010 Sfmt 8010 Q:\40\256165.XXX PC31

(2) Monitor nitrogen or oxygen concentration in the landfill gas on a monthly basis as follows:

(i) The nitrogen level must be determined using EPA Method 3C of appendix A–2 to part 60 of this chapter, unless an alternative test method is established as allowed by §63.1981(d)(2).

(ii) Unless an alternative test method is established as allowed by §63.1981(d)(2), the oxygen level must be determined by an oxygen meter using EPA Method 3A or 3C of appendix A–2 to part 60 of this chapter or ASTM D6522–11 (incorporated by reference, see §63.14). Determine the oxygen level by an oxygen meter using EPA Method 3A or 3C of appendix A–2 to part 60 or ASTM D6522–11 (if sample location is prior to combustion) except that:

(A) The span must be set between 10- and 12-percent oxygen;

(B) A data recorder is not required;

(C) Only two calibration gases are required, a zero and span;

(D) A calibration error check is not required; and

(E) The allowable sample bias, zero drift, and calibration drift are ±10 percent.

(iii) A portable gas composition analyzer may be used to monitor the oxygen levels provided:

(A) The analyzer is calibrated; and

(B) The analyzer meets all quality assurance and quality control requirements for EPA Method 3A of appendix A–2 to part 60 of this chapter or ASTM D6522–11 (incorporated by reference, see §63.14).

(3) Where an owner or operator subject to the provisions of this subpart seeks to demonstrate compliance with the temperature and nitrogen or oxygen operational standards in introductory paragraph §63.1958(c), the owner or operator must follow the procedures as specified in §60.756(a)(2) and (3) of this chapter. Monitor temperature of the landfill gas on a monthly basis as provided in §63.1960(a)(4). The temperature measuring device must be calibrated annually using the procedure in Section 10.3 of EPA Method 2 of appendix A–1 to part 60 of this chapter.

(4) Where an owner or operator subject to the provisions of this subpart seeks to demonstrate compliance with the operational standard for temperature in §63.1958(c)(1), monitor temperature of the landfill gas on a monthly basis as provided in §63.1960(a)(4). The temperature measuring device must be calibrated annually using the procedure in Section 10.3 of EPA Method 2 of appendix A–1 to part 60 of this chapter. Keep records specified in §63.1983(e).

(5) Where an owner or operator subject to the provisions of this subpart seeks to demonstrate compliance with the operational standard for temperature in §63.1958(c)(1), unless a higher operating temperature value has been approved by the Administrator under this subpart or under 40 CFR part 60, subpart WWW; 40 CFR part 60, subpart XXX; or a federal plan or EPA-approved and effective state plan or tribal plan that implements either 40 CFR part 60, subpart Cc or 40 CFR part 60, subpart Cf, you must initiate enhanced monitoring at each well with a measurement of landfill gas temperature greater than 62.8 degrees Celsius (145 degrees Fahrenheit) as follows:

(i) Visual observations for subsurface oxidation events (smoke, smoldering ash, damage to well) within the radius of influence of the well.

(ii) Monitor oxygen concentration as provided in paragraph (a)(2) of this section;

(iii) Monitor temperature of the landfill gas at the wellhead as provided in paragraph (a)(4) of this section.

(iv) Monitor temperature of the landfill gas every 10 vertical feet of the well as provided in paragraph (a)(6) of this section.

(v) Monitor the methane concentration with a methane meter using EPA Method 3C of appendix A–6 to part 60, EPA Method 18 of appendix A–6 to part 60 of this chapter, or a portable gas composition analyzer to monitor the methane levels provided that the analyzer is calibrated and the analyzer meets all quality assurance and quality control requirements for EPA Method 3C or EPA Method 18.

(vi) Monitor and determine carbon monoxide concentrations, as follows:

(A) Collect the sample from the wellhead sampling port in a passivated canister or multi-layer foil gas sampling bag (such as the Cali-5-Bond Bag) and analyze that sample using EPA Method 10 of appendix A–4 to part 60 of this

sfrattini on LAPJZKW1R2 with $$_JOB
VerDate Sep<11>2014 09:16 Apr 04, 2023 Jkt 256165 PO 00000 Frm 00285 Fmt 8010 Sfmt 8010 Q:\40\256165.XXX PC31

chapter, or an equivalent method with a detection limit of at least 100 ppmv of carbon monoxide in high concentrations of methane; or

(B) Collect and analyze the sample from the wellhead using EPA Method 10 of appendix A–4 to part 60 to measure carbon monoxide concentrations.

(C) When sampling directly from the wellhead, you must sample for 5 minutes plus twice the response time of the analyzer. These values must be recorded. The five 1-minute averages are then averaged to give you the carbon monoxide reading at the wellhead.

(D) When collecting samples in a passivated canister or multi-layer foil sampling bag, you must sample for the period of time needed to assure that enough sample is collected to provide five (5) consecutive, 1-minute samples during the analysis of the canister or bag contents, but no less than 5 minutes plus twice the response time of the analyzer. The five (5) consecutive, 1-minute averages are then averaged together to give you a carbon monoxide value from the wellhead.

(vii) The enhanced monitoring described in this paragraph (a)(5) must begin 7 calendar days after the first measurement of landfill gas temperature greater than 62.8 degrees Celsius (145 degrees Fahrenheit); and

(viii) The enhanced monitoring in this paragraph (a)(5) must be conducted on a weekly basis. If four consecutive weekly carbon monoxide readings are under 100 ppmv, then enhanced monitoring may be decreased to monthly. However, if carbon monoxide readings exceed 100 ppmv again, the landfill must return to weekly monitoring.

(ix) The enhanced monitoring in this paragraph (a)(5) can be stopped once a higher operating value is approved, at which time the monitoring provisions issued with the higher operating value should be followed, or once the measurement of landfill gas temperature at the wellhead is less than or equal to 62.8 degrees Celsius (145 degrees Fahrenheit).

(6) For each wellhead with a measurement of landfill gas temperature greater than or equal to 73.9 degrees Celsius (165 degrees Fahrenheit), annually monitor temperature of the landfill gas every 10 vertical feet of the well. This temperature can be monitored either with a removable thermometer, or using temporary or permanent thermocouples installed in the well.

(b) Each owner or operator seeking to comply with § 63.1959(b)(2)(iii) using an enclosed combustor must calibrate, maintain, and operate according to the manufacturer's specifications, the following equipment:

(1) A temperature monitoring device equipped with a continuous recorder and having a minimum accuracy of ±1 percent of the temperature being measured expressed in degrees Celsius or ±0.5 degrees Celsius, whichever is greater. A temperature monitoring device is not required for boilers or process heaters with design heat input capacity equal to or greater than 44 megawatts.

(2) A device that records flow to the control device and bypass of the control device (if applicable). The owner or operator must:

(i) Install, calibrate, and maintain a gas flow rate measuring device that must record the flow to the control device at least every 15 minutes; and

(ii) Secure the bypass line valve in the closed position with a car-seal or a lock-and-key type configuration. A visual inspection of the seal or closure mechanism must be performed at least once every month to ensure that the valve is maintained in the closed position and that the gas flow is not diverted through the bypass line.

(c) Each owner or operator seeking to comply with § 63.1959(b)(2)(iii) using a non-enclosed flare must install, calibrate, maintain, and operate according to the manufacturer's specifications the following equipment:

(1) A heat sensing device, such as an ultraviolet beam sensor or thermocouple, at the pilot light or the flame itself to indicate the continuous presence of a flame; and

(2) A device that records flow to the flare and bypass of the flare (if applicable). The owner or operator must:

(i) Install, calibrate, and maintain a gas flow rate measuring device that records the flow to the control device at least every 15 minutes; and

(ii) Secure the bypass line valve in the closed position with a car-seal or a

sfrattini on LAPJZKW1R2 with $$_JOB
VerDate Sep<11>2014 09:16 Apr 04, 2023 Jkt 256165 PO 00000 Frm 00286 Fmt 8010 Sfmt 8010 Q:\40\256165.XXX PC31

lock-and-key type configuration. A visual inspection of the seal or closure mechanism must be performed at least once every month to ensure that the valve is maintained in the closed position and that the gas flow is not diverted through the bypass line.

(d) Each owner or operator seeking to demonstrate compliance with §63.1959(b)(2)(iii) using a device other than a non-enclosed flare or an enclosed combustor or a treatment system must provide information satisfactory to the Administrator as provided in §63.1981(d)(2) describing the operation of the control device, the operating parameters that would indicate proper performance, and appropriate monitoring procedures. The Administrator must review the information and either approve it, or request that additional information be submitted. The Administrator may specify additional appropriate monitoring procedures.

(e) Each owner or operator seeking to install a collection system that does not meet the specifications in §63.1962 or seeking to monitor alternative parameters to those required by §§63.1958 through 63.1961 must provide information satisfactory to the Administrator as provided in §63.1981(d)(2) and (3) describing the design and operation of the collection system, the operating parameters that would indicate proper performance, and appropriate monitoring procedures. The Administrator may specify additional appropriate monitoring procedures.

(f) Each owner or operator seeking to demonstrate compliance with the 500-ppm surface methane operational standard in §63.1958(d) must monitor surface concentrations of methane according to the procedures in §63.1960(c) and the instrument specifications in §63.1960(d). If you are complying with the 500-ppm surface methane operational standard in §63.1958(d)(2), for location, you must determine the latitude and longitude coordinates of each exceedance using an instrument with an accuracy of at least 4 meters and the coordinates must be in decimal degrees with at least five decimal places. In the semi-annual report in §63.1981(h), you must report the location of each exceedance of the 500-ppm methane concentration as provided in §63.1958(d) and the concentration recorded at each location for which an exceedance was recorded in the previous month. Any closed landfill that has no monitored exceedances of the operational standard in three consecutive quarterly monitoring periods may skip to annual monitoring. Any methane reading of 500 ppm or more above background detected during the annual monitoring returns the frequency for that landfill to quarterly monitoring.

(g) Each owner or operator seeking to demonstrate compliance with §63.1959(b)(2)(iii)(C) using a landfill gas treatment system must calibrate, maintain, and operate according to the manufacturer's specifications a device that records flow to the treatment system and bypass of the treatment system (if applicable). Beginning no later than September 27, 2021, each owner or operator must maintain and operate all monitoring systems associated with the treatment system in accordance with the site-specific treatment system monitoring plan required in §63.1983(b)(5)(ii). The owner or operator must:

(1) Install, calibrate, and maintain a gas flow rate measuring device that records the flow to the treatment system at least every 15 minutes; and

(2) Secure the bypass line valve in the closed position with a car-seal or a lock-and-key type configuration. A visual inspection of the seal or closure mechanism must be performed at least once every month to ensure that the valve is maintained in the closed position and that the gas flow is not diverted through the bypass line.

(h) The monitoring requirements of paragraphs (a), (b), (c), (d), and (g) of this section apply at all times the affected source is operating, except for periods of monitoring system malfunctions, repairs associated with monitoring system malfunctions, and required monitoring system quality assurance or quality control activities. A monitoring system malfunction is any sudden, infrequent, not reasonably preventable failure of the monitoring system to provide valid data. Monitoring system failures that are caused in part

sfrattini on LAPJZKW1R2 with $$_JOB
VerDate Sep<11>2014 09:16 Apr 04, 2023 Jkt 256165 PO 00000 Frm 00287 Fmt 8010 Sfmt 8010 Q:\40\256165.XXX PC31

by poor maintenance or careless operation are not malfunctions. You are required to complete monitoring system repairs in response to monitoring system malfunctions and to return the monitoring system to operation as expeditiously as practicable. Where an owner or operator subject to the provisions of this subpart seeks to demonstrate compliance with the temperature and nitrogen or oxygen operational standards in introductory paragraph § 63.1958(c)(1), (d)(2), and (e)(1), the standards apply at all times.

[85 FR 17261, Mar. 26, 2020, as amended at 85 FR 64401, Oct. 13, 2020; 87 FR 8203, Feb. 14, 2022]

§ 63.1962 Specifications for active collection systems.

(a) Each owner or operator seeking to comply with § 63.1959(b)(2)(i) must site active collection wells, horizontal collectors, surface collectors, or other extraction devices at a sufficient density throughout all gas producing areas using the following procedures unless alternative procedures have been approved by the Administrator as provided in § 63.1981(d)(2) and (3):

(1) The collection devices within the interior must be certified to achieve comprehensive control of surface gas emissions by a professional engineer. The following issues must be addressed in the design: Depths of refuse, refuse gas generation rates and flow characteristics, cover properties, gas system expandability, leachate and condensate management, accessibility, compatibility with filling operations, integration with closure end use, air intrusion control, corrosion resistance, fill settlement, resistance to the refuse decomposition heat, and ability to isolate individual components or sections for repair or troubleshooting without shutting down entire collection system.

(2) The sufficient density of gas collection devices determined in paragraph (a)(1) of this section must address landfill gas migration issues and augmentation of the collection system through the use of active or passive systems at the landfill perimeter or exterior.

(3) The placement of gas collection devices determined in paragraph (a)(1) of this section must control all gas producing areas, except as provided by paragraphs (a)(3)(i) and (ii) of this section.

(i) Any segregated area of asbestos or nondegradable material may be excluded from collection if documented as provided under § 63.1983(d). The documentation must provide the nature, date of deposition, location and amount of asbestos or nondegradable material deposited in the area and must be provided to the Administrator upon request.

(ii) Any nonproductive area of the landfill may be excluded from control, provided that the total of all excluded areas can be shown to contribute less than 1 percent of the total amount of NMOC emissions from the landfill. The amount, location, and age of the material must be documented and provided to the Administrator upon request. A separate NMOC emissions estimate must be made for each section proposed for exclusion, and the sum of all such sections must be compared to the NMOC emissions estimate for the entire landfill.

(A) The NMOC emissions from each section proposed for exclusion must be computed using Equation 7:

$$Q_i = 2\ k\ L_o M_i (e^{-kt_i})\ (C_{NMOC})\ (3.6 \times 10^{-9})\ \text{(Eq. 7)}$$

Where:

Q_i = NMOC emission rate from the ith section, Mg/yr.

k = Methane generation rate constant, year^{-1}.

L_o = Methane generation potential, m^3/Mg solid waste.

M_i = Mass of the degradable solid waste in the ith section, Mg.

t_i = Age of the solid waste in the ith section, years.

C_{NMOC} = Concentration of NMOC, ppmv.

3.6×10^{-9} = Conversion factor.

(B) If the owner/operator is proposing to exclude, or cease gas collection and

sfrattini on LAPJZKW1R2 with $$_JOB
VerDate Sep<11>2014 09:16 Apr 04, 2023 Jkt 256165 PO 00000 Frm 00288 Fmt 8010 Sfmt 8010 Q:\40\256165.XXX PC31
ER26MR20.010</GPH>

control from, nonproductive physically separated (*e.g.*, separately lined) closed areas that already have gas collection systems, NMOC emissions from each physically separated closed area must be computed using either Equation 3 in §63.1959(c) or Equation 7 in paragraph (a)(3)(ii)(A) of this section.

(iii) The values for k and C_{NMOC} determined in field testing must be used if field testing has been performed in determining the NMOC emission rate or the radii of influence (the distance from the well center to a point in the landfill where the pressure gradient applied by the blower or compressor approaches zero). If field testing has not been performed, the default values for k, L_o and C_{NMOC} provided in §63.1959(a)(1) or the alternative values from §63.1959(a)(5) must be used. The mass of nondegradable solid waste contained within the given section may be subtracted from the total mass of the section when estimating emissions provided the nature, location, age, and amount of the nondegradable material is documented as provided in paragraph (a)(3)(i) of this section.

(b) Each owner or operator seeking to comply with §63.1959(b)(2)(ii) must construct the gas collection devices using the following equipment or procedures:

(1) The landfill gas extraction components must be constructed of polyvinyl chloride (PVC), high density polyethylene (HDPE) pipe, fiberglass, stainless steel, or other nonporous corrosion resistant material of suitable dimensions to: Convey projected amounts of gases; withstand installation, static, and settlement forces; and withstand planned overburden or traffic loads. The collection system must extend as necessary to comply with emission and migration standards. Collection devices such as wells and horizontal collectors must be perforated to allow gas entry without head loss sufficient to impair performance across the intended extent of control. Perforations must be situated with regard to the need to prevent excessive air infiltration.

(2) Vertical wells must be placed so as not to endanger underlying liners and must address the occurrence of water within the landfill. Holes and trenches constructed for piped wells and horizontal collectors must be of sufficient cross-section so as to allow for their proper construction and completion including, for example, centering of pipes and placement of gravel backfill. Collection devices must be designed so as not to allow indirect short circuiting of air into the cover or refuse into the collection system or gas into the air. Any gravel used around pipe perforations should be of a dimension so as not to penetrate or block perforations.

(3) Collection devices may be connected to the collection header pipes below or above the landfill surface. The connector assembly must include a positive closing throttle valve, any necessary seals and couplings, access couplings and at least one sampling port. The collection devices must be constructed of PVC, HDPE, fiberglass, stainless steel, or other nonporous material of suitable thickness.

(c) Each owner or operator seeking to comply with §63.1959(b)(2)(iii) must convey the landfill gas to a control system in compliance with §63.1959(b)(2)(iii) through the collection header pipe(s). The gas mover equipment must be sized to handle the maximum gas generation flow rate expected over the intended use period of the gas moving equipment using the following procedures:

(1) For existing collection systems, the flow data must be used to project the maximum flow rate. If no flow data exists, the procedures in paragraph (c)(2) of this section must be used.

(2) For new collection systems, the maximum flow rate must be in accordance with §63.1960(a)(1).

General and Continuing Compliance Requirements

§63.1964 How is compliance determined?

Compliance is determined using performance testing, collection system monitoring, continuous parameter monitoring, and other credible evidence. In addition, continuous parameter monitoring data collected under §63.1961(b)(1), (c)(1), and (d) are used to demonstrate compliance with the operating standards for control systems. If a deviation occurs, you have failed to

sfrattini on LAPJZKW1R2 with $$_JOB
VerDate Sep<11>2014 09:16 Apr 04, 2023 Jkt 256165 PO 00000 Frm 00289 Fmt 8010 Sfmt 8010 Q:\40\256165.XXX PC31

meet the control device operating standards described in this subpart and have deviated from the requirements of this subpart.

(a) Before September 28, 2021, you must develop a written SSM plan according to the provisions in § 63.6(e)(3) of subpart A. A copy of the SSM plan must be maintained on site. Failure to write or maintain a copy of the SSM plan is a deviation from the requirements of this subpart.

(b) After September 27, 2021, the SSM provisions of § 63.6(e) of subpart A no longer apply to this subpart and the SSM plan developed under paragraph (a) of this section no longer applies. Compliance with the emissions standards and the operating standards of § 63.1958 of this subpart is required at all times.

§ 63.1965 What is a deviation?

A deviation is defined in § 63.1990. For the purposes of the landfill monitoring and SSM plan requirements, deviations include the items in paragraphs (a) through (c) of this section.

(a) A deviation occurs when the control device operating parameter boundaries described in § 63.1983(c)(1) are exceeded.

(b) A deviation occurs when 1 hour or more of the hours during the 3-hour block averaging period does not constitute a valid hour of data. A valid hour of data must have measured values for at least three 15-minute monitoring periods within the hour.

(c) Before September 28, 2021, a deviation occurs when a SSM plan is not developed or maintained on site and when an affected source fails to meet any emission limitation, (including any operating limit), or work practice requirement in this subpart during SSM, regardless of whether or not such failure is permitted by this subpart.

§ 63.1975 How do I calculate the 3-hour block average used to demonstrate compliance?

Before September 28, 2021, averages are calculated in the same way as they are calculated in § 60.758(b)(2)(i) of this subchapter for average combustion temperature and § 60.758(c) for 3-hour average combustion temperature for enclosed combustors, except that the data collected during the events listed in paragraphs (a) through (d) of this section are not to be included in any average computed under this subpart. Beginning no later than September 27, 2021, averages are calculated according to § 63.1983(b)(2)(i) for average combustion temperature and § 63.1983(c)(1)(i) for 3-hour average combustion temperature for enclosed combustors, except that the data collected during the event listed in paragraph (a) of this section are not to be included in any average computed under this subpart.

(a) Monitoring system breakdowns, repairs, calibration checks, and zero (low-level) and high-level adjustments.

(b) Startups.

(c) Shutdowns.

(d) Malfunctions.

[85 FR 17261, Mar. 26, 2020, as amended at 87 FR 8204, Feb. 14, 2022]

NOTIFICATIONS, RECORDS, AND REPORTS

§ 63.1981 What reports must I submit?

You must submit the reports specified in this section and the reports specified in Table 1 to this subpart. If you have previously submitted a design capacity report, amended design capacity report, initial NMOC emission rate report, initial or revised collection and control system design plan, closure report, equipment removal report, or initial performance test under 40 CFR part 60, subpart WWW; 40 CFR part 60, subpart XXX; or a federal plan or EPA-approved and effective state plan or tribal plan that implements either 40 CFR part 60, subpart Cc or 40 CFR part 60, subpart Cf, then that submission constitutes compliance with the design capacity report in paragraph (a) of this section, the amended design capacity report in paragraph (b) of this section, the initial NMOC emission rate report in paragraph (c) of this section, the initial collection and control system design plan in paragraph (d) of this section, the revised design plan in paragraph (e) of this section, the closure report in paragraph (f) of this section, the equipment removal report in paragraph (g) of this section, and the initial performance test report in paragraph (i) of this section. You do not need to re-submit the report(s). However, you must include a statement certifying

sfrattini on LAPJZKW1R2 with $$_JOB
VerDate Sep<11>2014 09:16 Apr 04, 2023 Jkt 256165 PO 00000 Frm 00290 Fmt 8010 Sfmt 8010 Q:\40\256165.XXX PC31

prior submission of the respective report(s) and the date of submittal in the first semi-annual report required in this section.

(a) *Initial design capacity report.* The initial design capacity report must contain the information specified in §60.757(a)(2) of this chapter, except beginning no later than September 28, 2021, the report must contain:

(1) A map or plot of the landfill, providing the size and location of the landfill, and identifying all areas where solid waste may be landfilled according to the permit issued by the state, local, or tribal agency responsible for regulating the landfill.

(2) The maximum design capacity of the landfill. Where the maximum design capacity is specified in the permit issued by the state, local, or tribal agency responsible for regulating the landfill, a copy of the permit specifying the maximum design capacity may be submitted as part of the report. If the maximum design capacity of the landfill is not specified in the permit, the maximum design capacity must be calculated using good engineering practices. The calculations must be provided, along with the relevant parameters as part of the report. The landfill may calculate design capacity in either Mg or m^3 for comparison with the exemption values. If the owner or operator chooses to convert the design capacity from volume to mass or from mass to volume to demonstrate its design capacity is less than 2.5 million Mg or 2.5 million m^3, the calculation must include a site-specific density, which must be recalculated annually. Any density conversions must be documented and submitted with the design capacity report. The state, tribal, local agency or Administrator may request other reasonable information as may be necessary to verify the maximum design capacity of the landfill.

(b) *Amended design capacity report.* An amended design capacity report must be submitted to the Administrator providing notification of an increase in the design capacity of the landfill, within 90 days of an increase in the maximum design capacity of the landfill to meet or exceed 2.5 million Mg and 2.5 million m^3. This increase in design capacity may result from an increase in the permitted volume of the landfill or an increase in the density as documented in the annual recalculation required in §63.1983(f).

(c) *NMOC emission rate report.* Each owner or operator subject to the requirements of this subpart must submit a copy of the latest NMOC emission rate report that was submitted according to §60.757(b) of this chapter or submit an NMOC emission rate report to the Administrator initially and annually thereafter, except as provided for in paragraph (c)(1)(ii)(A) of this section. The Administrator may request such additional information as may be necessary to verify the reported NMOC emission rate. If you have submitted an annual report under 40 CFR part 60, subpart WWW; 40 CFR part 60, subpart XXX; or a Federal plan or EPA-approved and effective state plan or tribal plan that implements either 40 CFR part 60, subpart Cc or 40 CFR part 60, subpart Cf, then that submission constitutes compliance with the annual NMOC emission rate report in this paragraph. You do not need to re-submit the annual report for the current year. Beginning no later than September 27, 2021, the report must meet the following requirements:

(1) The NMOC emission rate report must contain an annual or 5-year estimate of the NMOC emission rate calculated using the formula and procedures provided in §63.1959(a) or (b), as applicable.

(i) The initial NMOC emission rate report must be submitted no later than 90 days after the date of commenced construction, modification, or reconstruction for landfills that commence construction, modification, or reconstruction on or after March 12, 1996.

(ii) Subsequent NMOC emission rate reports must be submitted annually thereafter, except as provided for in paragraph (c)(1)(ii)(A) of this section.

(A) If the estimated NMOC emission rate as reported in the annual report to the Administrator is less than 50 Mg/yr in each of the next 5 consecutive years, the owner or operator may elect to submit, an estimate of the NMOC emission rate for the next 5-year period in lieu of the annual report. This estimate must include the current amount of solid waste-in-place and the estimated

sfrattini on LAPJZKW1R2 with $$_JOB
VerDate Sep<11>2014 09:16 Apr 04, 2023 Jkt 256165 PO 00000 Frm 00291 Fmt 8010 Sfmt 8010 Q:\40\256165.XXX PC31

waste acceptance rate for each year of the 5 years for which an NMOC emission rate is estimated. All data and calculations upon which this estimate is based must be provided to the Administrator. This estimate must be revised at least once every 5 years. If the actual waste acceptance rate exceeds the estimated waste acceptance rate in any year reported in the 5-year estimate, a revised 5-year estimate must be submitted to the Administrator. The revised estimate must cover the 5-year period beginning with the year in which the actual waste acceptance rate exceeded the estimated waste acceptance rate.

(B) The report must be submitted following the procedure specified in paragraph (l)(2) of this section.

(2) The NMOC emission rate report must include all the data, calculations, sample reports and measurements used to estimate the annual or 5-year emissions.

(3) Each owner or operator subject to the requirements of this subpart is exempted from the requirements to submit an NMOC emission rate report, after installing a collection and control system that complies with § 63.1959(b)(2), during such time as the collection and control system is in operation and in compliance with §§ 63.1958 and 63.1960.

(d) *Collection and control system design plan*. Each owner or operator subject to the provisions of § 63.1959(b)(2) must submit a collection and control system design plan to the Administrator for approval according to § 60.757(c) of this chapter and the schedule in § 60.757(c)(1) and (2). Beginning no later than September 27, 2021, each owner or operator subject to the provisions of § 63.1959(b)(2) must submit a collection and control system design plan to the Administrator according to paragraphs (d)(1) through (6) of this section. The collection and control system design plan must be prepared and approved by a professional engineer.

(1) The collection and control system as described in the design plan must meet the design requirements in § 63.1959(b)(2).

(2) The collection and control system design plan must include any alternatives to the operational standards, test methods, procedures, compliance measures, monitoring, recordkeeping or reporting provisions of §§ 63.1957 through 63.1983 proposed by the owner or operator.

(3) The collection and control system design plan must either conform with specifications for active collection systems in § 63.1962 or include a demonstration to the Administrator's satisfaction of the sufficiency of the alternative provisions to § 63.1962.

(4) Each owner or operator of an MSW landfill affected by this subpart must submit a collection and control system design plan to the Administrator for approval within 1 year of becoming subject to this subpart.

(5) The landfill owner or operator must notify the Administrator that the design plan is completed and submit a copy of the plan's signature page. The Administrator has 90 days to decide whether the design plan should be submitted for review. If the Administrator chooses to review the plan, the approval process continues as described in paragraph (d)(6) of this section. In the event that the design plan is required to be modified to obtain approval, the owner or operator must take any steps necessary to conform any prior actions to the approved design plan and any failure to do so could result in an enforcement action.

(6) Upon receipt of an initial or revised design plan, the Administrator must review the information submitted under paragraphs (d)(1) through (3) of this section and either approve it, disapprove it, or request that additional information be submitted. Because of the many site-specific factors involved with landfill gas system design, alternative systems may be necessary. A wide variety of system designs are possible, such as vertical wells, combination horizontal and vertical collection systems, or horizontal trenches only, leachate collection components, and passive systems.

(e) *Revised design plan*. Beginning no later than September 27, 2021, the owner or operator who has already been required to submit a design plan under paragraph (d) of this section must submit a revised design plan to the Administrator for approval as follows:

sfrattini on LAPJZKW1R2 with $$_JOB
VerDate Sep<11>2014 09:16 Apr 04, 2023 Jkt 256165 PO 00000 Frm 00292 Fmt 8010 Sfmt 8010 Q:\40\256165.XXX PC31

(1) At least 90 days before expanding operations to an area not covered by the previously approved design plan.

(2) Prior to installing or expanding the gas collection system in a way that is not consistent with the design plan that was submitted to the Administrator according to paragraph (d) of this section.

(f) *Closure report.* Each owner or operator of a controlled landfill must submit a closure report to the Administrator within 30 days of waste acceptance cessation. The Administrator may request additional information as may be necessary to verify that permanent closure has taken place in accordance with the requirements of §258.60 of this chapter. If a closure report has been submitted to the Administrator, no additional wastes may be placed into the landfill without filing a notification of modification as described under §63.9(b) of subpart A.

(g) *Equipment removal report.* Each owner or operator of a controlled landfill must submit an equipment removal report as provided in §60.757(e) of this chapter. Each owner or operator of a controlled landfill must submit an equipment removal report to the Administrator 30 days prior to removal or cessation of operation of the control equipment.

(1) Beginning no later than September 27, 2021, the equipment removal report must contain all of the following items:

(i) A copy of the closure report submitted in accordance with paragraph (f) of this section;

(ii) A copy of the initial performance test report demonstrating that the 15-year minimum control period has expired, or information that demonstrates that the gas collection and control system will be unable to operate for 15 years due to declining gas flows. In the equipment removal report, the process unit(s) tested, the pollutant(s) tested, and the date that such performance test was conducted may be submitted in lieu of the performance test report if the report has been previously submitted to the EPA's Central Data Exchange (CDX); and

(iii) Dated copies of three successive NMOC emission rate reports demonstrating that the landfill is no longer producing 50 Mg or greater of NMOC per year. If the NMOC emission rate reports have been previously submitted to the EPA's CDX, a statement that the NMOC emission rate reports have been submitted electronically and the dates that the reports were submitted to the EPA's CDX may be submitted in the equipment removal report in lieu of the NMOC emission rate reports.

(2) The Administrator may request such additional information as may be necessary to verify that all of the conditions for removal in §63.1957(b) have been met.

(h) *Semi-annual report.* The owner or operator of a landfill seeking to comply with §63.1959(b)(2) using an active collection system designed in accordance with §63.1959(b)(2)(ii) must submit to the Administrator semi-annual reports. Beginning no later than September 27, 2021, you must submit the report, following the procedure specified in paragraph (l) of this section. The initial report must be submitted within 180 days of installation and startup of the collection and control system and must include the initial performance test report required under §63.7 of subpart A, as applicable. In the initial report, the process unit(s) tested, the pollutant(s) tested, and the date that such performance test was conducted may be submitted in lieu of the performance test report if the report has been previously submitted to the EPA's CDX. For enclosed combustion devices and flares, reportable exceedances are defined under §63.1983(c). The semi-annual reports must contain the information in paragraphs (h)(1) through (8) of this section.

(1) Number of times that applicable parameters monitored under §63.1958(b), (c), and (d) were exceeded and when the gas collection and control system was not operating under §63.1958(e), including periods of SSM. For each instance, report the date, time, and duration of each exceedance.

(i) Where an owner or operator subject to the provisions of this subpart seeks to demonstrate compliance with the temperature and nitrogen or oxygen operational standards in introductory paragraph §63.1958(c), provide a statement of the wellhead operational standard for temperature and oxygen

sfrattini on LAPJZKW1R2 with $$_JOB
VerDate Sep<11>2014 09:16 Apr 04, 2023 Jkt 256165 PO 00000 Frm 00293 Fmt 8010 Sfmt 8010 Q:\40\256165.XXX PC31

you are complying with for the period covered by the report. Indicate the number of times each of those parameters monitored under § 63.1961(a)(3) were exceeded. For each instance, report the date, time, and duration of each exceedance.

(ii) Where an owner or operator subject to the provisions of this subpart seeks to demonstrate compliance with the operational standard for temperature in § 63.1958(c)(1), provide a statement of the wellhead operational standard for temperature and oxygen you are complying with for the period covered by the report. Indicate the number of times each of those parameters monitored under § 63.1961(a)(4) were exceeded. For each instance, report the date, time, and duration of each exceedance.

(iii) Beginning no later than September 27, 2021, number of times the parameters for the site-specific treatment system in § 63.1961(g) were exceeded.

(2) Description and duration of all periods when the gas stream was diverted from the control device or treatment system through a bypass line or the indication of bypass flow as specified under § 63.1961.

(3) Description and duration of all periods when the control device or treatment system was not operating and length of time the control device or treatment system was not operating.

(4) All periods when the collection system was not operating.

(5) The location of each exceedance of the 500-ppm methane concentration as provided in § 63.1958(d) and the concentration recorded at each location for which an exceedance was recorded in the previous month. Beginning no later than September 27, 2021, for location, you record the latitude and longitude coordinates of each exceedance using an instrument with an accuracy of at least 4 meters. The coordinates must be in decimal degrees with at least five decimal places.

(6) The date of installation and the location of each well or collection system expansion added pursuant to § 63.1960(a)(3) and (4), (b), and (c)(4).

(7) For any corrective action analysis for which corrective actions are required in § 63.1960(a)(3)(i) or (a)(5) and that take more than 60 days to correct the exceedance, the root cause analysis conducted, including a description of the recommended corrective action(s), the date for corrective action(s) already completed following the positive pressure or high temperature reading, and, for action(s) not already completed, a schedule for implementation, including proposed commencement and completion dates.

(8) Each owner or operator required to conduct enhanced monitoring in §§ 63.1961(a)(5) and (6) must include the results of all monitoring activities conducted during the period.

(i) For each monitoring point, report the date, time, and well identifier along with the value and units of measure for oxygen, temperature (wellhead and downwell), methane, and carbon monoxide.

(ii) Include a summary trend analysis for each well subject to the enhanced monitoring requirements to chart the weekly readings over time for oxygen, wellhead temperature, methane, and weekly or monthly readings over time, as applicable for carbon monoxide.

(iii) Include the date, time, staff person name, and description of findings for each visual observation for subsurface oxidation event.

(i) *Initial performance test report.* Each owner or operator seeking to comply with § 63.1959(b)(2)(iii) must include the following information with the initial performance test report required under § 63.7 of subpart A:

(1) A diagram of the collection system showing collection system positioning including all wells, horizontal collectors, surface collectors, or other gas extraction devices, including the locations of any areas excluded from collection and the proposed sites for the future collection system expansion;

(2) The data upon which the sufficient density of wells, horizontal collectors, surface collectors, or other gas extraction devices and the gas mover equipment sizing are based;

(3) The documentation of the presence of asbestos or nondegradable material for each area from which collection wells have been excluded based on the presence of asbestos or nondegradable material;

sfrattini on LAPJZKW1R2 with $$_JOB
VerDate Sep<11>2014 09:16 Apr 04, 2023 Jkt 256165 PO 00000 Frm 00294 Fmt 8010 Sfmt 8010 Q:\40\256165.XXX PC31

(4) The sum of the gas generation flow rates for all areas from which collection wells have been excluded based on nonproductivity and the calculations of gas generation flow rate for each excluded area;

(5) The provisions for increasing gas mover equipment capacity with increased gas generation flow rate, if the present gas mover equipment is inadequate to move the maximum flow rate expected over the life of the landfill; and

(6) The provisions for the control of off-site migration.

(j) *Corrective action and the corresponding timeline.* The owner or operator must submit information regarding corrective actions according to paragraphs (j)(1) and (2) of this section.

(1) For corrective action that is required according to §63.1960(a)(3) or (4) and is not completed within 60 days after the initial exceedance, you must submit a notification to the Administrator as soon as practicable but no later than 75 days after the first measurement of positive pressure or temperature exceedance.

(2) For corrective action that is required according to §63.1960(a)(3) or (4) and is expected to take longer than 120 days after the initial exceedance to complete, you must submit the root cause analysis, corrective action analysis, and corresponding implementation timeline to the Administrator as soon as practicable but no later than 75 days after the first measurement of positive pressure or temperature monitoring value of 62.8 degrees Celsius (145 degrees Fahrenheit) or above unless a higher operating temperature value has been approved by the Administrator for the well under this subpart or under 40 CFR part 60, subpart WWW; 40 CFR part 60, subpart XXX; or a Federal plan or EPA approved and effective state plan or tribal plan that implements either 40 CFR part 60, subpart Cc or 40 CFR part 60, subpart Cf. The Administrator must approve the plan for corrective action and the corresponding timeline.

(k) *24-hour high temperature report.* Where an owner or operator subject to the provisions of this subpart seeks to demonstrate compliance with the operational standard for temperature in §63.1958(c)(1) and a landfill gas temperature measured at either the wellhead or at any point in the well is greater than or equal to 76.7 degrees Celsius (170 degrees Fahrenheit) and the carbon monoxide concentration measured is greater than or equal to 1,000 ppmv, then you must report the date, time, well identifier, temperature and carbon monoxide reading via email to the Administrator within 24 hours of the measurement unless a higher operating temperature value has been approved by the Administrator for the well under this subpart or under 40 CFR part 60, subpart WWW; 40 CFR part 60, subpart XXX; or a Federal plan or EPA approved and effective state plan or tribal plan that implements either 40 CFR part 60, subpart Cc or 40 CFR part 60, subpart Cf.

(l) *Electronic reporting.* Beginning no later than September 27, 2021, the owner or operator must submit reports electronically according to paragraphs (l)(1) and (2) of this section.

(1) Within 60 days after the date of completing each performance test required by this subpart, you must submit the results of the performance test following the procedures specified in paragraphs (l)(1)(i) through (iii) of this section.

(i) Data collected using test methods supported by the EPA's Electronic Reporting Tool (ERT) as listed on the EPA's ERT website (*https://www.epa.gov/electronic-reporting-air-emissions/electronic-reporting-tool-ert*) at the time of the test. Submit the results of the performance test to the EPA via the Compliance and Emissions Data Reporting Interface (CEDRI), which can be accessed through the EPA's CDX (*https://cdx.epa.gov/*). The data must be submitted in a file format generated through the use of the EPA's ERT. Alternatively, you may submit an electronic file consistent with the extensible markup language (XML) schema listed on the EPA's ERT website.

(ii) Data collected using test methods that are not supported by the EPA's ERT as listed on the EPA's ERT website at the time of the test. The results of the performance test must be included as an attachment in the ERT

sfrattini on LAPJZKW1R2 with $$_JOB
VerDate Sep<11>2014 09:16 Apr 04, 2023 Jkt 256165 PO 00000 Frm 00295 Fmt 8010 Sfmt 8010 Q:\40\256165.XXX PC31

or an alternate electronic file consistent with the XML schema listed on the EPA's ERT website. Submit the ERT generated package or alternative file to the EPA via CEDRI.

(iii) Confidential business information (CBI). If you claim some of the information submitted under paragraph (a) of this section is CBI, you must submit a complete file, including information claimed to be CBI, to the EPA. The file must be generated through the use of the EPA's ERT or an alternate electronic file consistent with the XML schema listed on the EPA's ERT website. Submit the file on a compact disc, flash drive, or other commonly used electronic storage medium and clearly mark the medium as CBI. Mail the electronic medium to U.S. EPA/OAQPS/CORE CBI Office, Attention: Group Leader, Measurement Policy Group, MD C404–02, 4930 Old Page Rd., Durham, NC 27703. The same file with the CBI omitted must be submitted to the EPA via the EPA's CDX as described in paragraph (l)(1)(i) of this section.

(2) Each owner or operator required to submit reports following the procedure specified in this paragraph must submit reports to the EPA via CEDRI. CEDRI can be accessed through the EPA's CDX. The owner or operator must use the appropriate electronic report in CEDRI for this subpart or an alternate electronic file format consistent with the XML schema listed on the CEDRI website (*https://www.epa.gov/electronic-reporting-air-emissions/compliance-and-emissions-data-reporting-interface-cedri*). Once the spreadsheet template upload/forms for the reports have been available in CEDRI for 90 days, the owner or operator must begin submitting all subsequent reports via CEDRI. The reports must be submitted by the deadlines specified in this subpart, regardless of the method in which the reports are submitted. The NMOC emission rate reports, semi-annual reports, and bioreactor 40-percent moisture reports should be electronically reported as a spreadsheet template upload/form to CEDRI. If the reporting forms specific to this subpart are not available in CEDRI at the time that the reports are due, the owner or operator must submit the reports to the Administrator at the appropriate address listed in § 63.13 of subpart A.

(m) *Claims of EPA system outage*. Beginning no later than September 27, 2021, if you are required to electronically submit a report through CEDRI in the EPA's CDX, you may assert a claim of EPA system outage for failure to comply timely with the reporting requirement. To assert a claim of EPA system outage, you must meet the following requirements:

(1) You must have been or will be precluded from accessing CEDRI and submitting a required report within the time prescribed due to an outage of either the EPA's CEDRI or CDX systems.

(2) The outage must have occurred within the period of time beginning 5 business days prior to the date that the submission is due.

(3) The outage may be planned or unplanned.

(4) You must submit notification to the Administrator in writing as soon as possible following the date you first knew, or through due diligence should have known, that the event may cause or has caused a delay in reporting.

(5) You must provide to the Administrator a written description identifying:

(i) The date(s) and time(s) when CDX or CEDRI was accessed and the system was unavailable;

(ii) A rationale for attributing the delay in reporting beyond the regulatory deadline to EPA system outage;

(iii) Measures taken or to be taken to minimize the delay in reporting; and

(iv) The date by which you propose to report, or if you have already met the reporting requirement at the time of the notification, the date you reported.

(6) The decision to accept the claim of EPA system outage and allow an extension to the reporting deadline is solely within the discretion of the Administrator.

(7) In any circumstance, the report must be submitted electronically as soon as possible after the outage is resolved.

(n) *Claims of force majeure*. Beginning no later than September 27, 2021, if you are required to electronically submit a report through CEDRI in the EPA's CDX, you may assert a claim of force majeure for failure to comply timely

sfrattini on LAPJZKW1R2 with $$_JOB
VerDate Sep<11>2014 09:16 Apr 04, 2023 Jkt 256165 PO 00000 Frm 00296 Fmt 8010 Sfmt 8010 Q:\40\256165.XXX PC31

with the reporting requirement. To assert a claim of force majeure, you must meet the following requirements:

(1) You may submit a claim if a force majeure event is about to occur, occurs, or has occurred or there are lingering effects from such an event within the period of time beginning 5 business days prior to the date the submission is due. For the purposes of this section, a force majeure event is defined as an event that will be or has been caused by circumstances beyond the control of the affected facility, its contractors, or any entity controlled by the affected facility that prevents you from complying with the requirement to submit a report electronically within the time period prescribed. Examples of such events are acts of nature (*e.g.*, hurricanes, earthquakes, or floods), acts of war or terrorism, or equipment failure or safety hazard beyond the control of the affected facility (*e.g.*, large scale power outage).

(2) You must submit notification to the Administrator in writing as soon as possible following the date you first knew, or through due diligence should have known, that the event may cause or has caused a delay in reporting.

(3) You must provide to the Administrator:

(i) A written description of the force majeure event;

(ii) A rationale for attributing the delay in reporting beyond the regulatory deadline to the force majeure event;

(iii) Measures taken or to be taken to minimize the delay in reporting; and

(iv) The date by which you propose to report, or if you have already met the reporting requirement at the time of the notification, the date you reported.

(4) The decision to accept the claim of force majeure and allow an extension to the reporting deadline is solely within the discretion of the Administrator.

(5) In any circumstance, the reporting must occur as soon as possible after the force majeure event occurs.

[85 FR 17261, Mar. 26, 2020, as amended at 87 FR 8204, Feb. 14, 2022]

§63.1982 What records and reports must I submit and keep for bioreactors or liquids addition other than leachate?

Submit reports as specified in this section and §63.1981. Keep records as specified in this section and §63.1983.

(a) For bioreactors at new affected sources you must submit the initial semi-annual compliance report and performance test results described in §63.1981(h) within 180 days after the date you are required to begin operating the gas collection and control system by §63.1947(a)(2).

(b) If you must submit a semi-annual compliance report for a bioreactor as well as a semi-annual compliance report for a conventional portion of the same landfill, you may delay submittal of a subsequent semi-annual compliance report for the bioreactor according to paragraphs (b)(1) through (3) of this section so that the reports may be submitted on the same schedule.

(1) After submittal of your initial semi-annual compliance report and performance test results for the bioreactor, you may delay submittal of the subsequent semi-annual compliance report for the bioreactor until the date the initial or subsequent semi-annual compliance report is due for the conventional portion of your landfill.

(2) You may delay submittal of your subsequent semi-annual compliance report by no more than 12 months after the due date for submitting the initial semi-annual compliance report and performance test results described in §63.1981(h) for the bioreactor. The report must cover the time period since the previous semi-annual report for the bioreactor, which would be a period of at least 6 months and no more than 12 months.

(3) After the delayed semi-annual report, all subsequent semi-annual reports for the bioreactor must be submitted every 6 months on the same date the semi-annual report for the conventional portion of the landfill is due.

(c) If you add any liquids other than leachate in a controlled fashion to the waste mass and do not comply with the bioreactor requirements in §§63.1947, 63.1955(b), and paragraphs (a) and (b) of this section, you must keep a record of

sfrattini on LAPJZKW1R2 with $$_JOB
VerDate Sep<11>2014 09:16 Apr 04, 2023 Jkt 256165 PO 00000 Frm 00297 Fmt 8010 Sfmt 8010 Q:\40\256165.XXX PC31

calculations showing that the percent moisture by weight expected in the waste mass to which liquid is added is less than 40 percent. The calculation must consider the waste mass, moisture content of the incoming waste, mass of water added to the waste including leachate recirculation and other liquids addition and precipitation, and the mass of water removed through leachate or other water losses. Moisture level sampling or mass balances calculations can be used. You must document the calculations and the basis of any assumptions. Keep the record of the calculations until you cease liquids addition.

(d) If you calculate moisture content to establish the date your bioreactor is required to begin operating the collection and control system under § 63.1947(a)(2) or (c)(2), keep a record of the calculations including the information specified in paragraph (e) of this section for 5 years. Within 90 days after the bioreactor achieves 40-percent moisture content, report the results of the calculation, the date the bioreactor achieved 40-percent moisture content by weight, and the date you plan to begin collection and control system operation to the Administrator. Beginning no later than September 27, 2021, the reports should be submitted following the procedure specified in § 63.1981(l)(2).

§ 63.1983 What records must I keep?

You must keep records as specified in this subpart. You must also keep records as specified in the general provisions of 40 CFR part 63 as shown in Table 1 to this subpart.

(a) Except as provided in § 63.1981(d)(2), each owner or operator of an MSW landfill subject to the provisions of § 63.1959(b)(2)(ii) and (iii) of this chapter must keep for at least 5 years up-to-date, readily accessible, on-site records of the design capacity report that triggered § 63.1959(b), the current amount of solid waste in-place, and the year-by-year waste acceptance rate. Off-site records may be maintained if they are retrievable within 4 hours. Either paper copy or electronic formats are acceptable.

(b) Except as provided in § 63.1981(d)(2), each owner or operator of a controlled landfill must keep up-to-date, readily accessible records for the life of the control system equipment of the data listed in paragraphs (b)(1) through (5) of this section as measured during the initial performance test or compliance determination. Records of subsequent tests or monitoring must be maintained for a minimum of 5 years. Records of the control device vendor specifications must be maintained until removal.

(1) Where an owner or operator subject to the provisions of this subpart seeks to demonstrate compliance with § 63.1959(b)(2)(ii):

(i) The maximum expected gas generation flow rate as calculated in § 63.1960(a)(1).

(ii) The density of wells, horizontal collectors, surface collectors, or other gas extraction devices determined using the procedures specified in § 63.1962(a)(1) and (2).

(2) Where an owner or operator subject to the provisions of this subpart seeks to demonstrate compliance with § 63.1959(b)(2)(iii) through use of an enclosed combustion device other than a boiler or process heater with a design heat input capacity equal to or greater than 44 megawatts:

(i) The average temperature measured at least every 15 minutes and averaged over the same time period of the performance test.

(ii) The percent reduction of NMOC determined as specified in § 63.1959(b)(2)(iii)(B) achieved by the control device.

(3) Where an owner or operator subject to the provisions of this subpart seeks to demonstrate compliance with § 63.1959(b)(2)(iii)(B)(*1*) through use of a boiler or process heater of any size: A description of the location at which the collected gas vent stream is introduced into the boiler or process heater over the same time period of the performance testing.

(4) Where an owner or operator subject to the provisions of this subpart seeks to demonstrate compliance with § 63.1959(b)(2)(iii)(A) through use of a non-enclosed flare, the flare type (*i.e.*, steam-assisted, air-assisted, or non-assisted), all visible emission readings, heat content determination, flow rate or bypass flow rate measurements, and

sfrattini on LAPJZKW1R2 with $$_JOB
VerDate Sep<11>2014 09:16 Apr 04, 2023 Jkt 256165 PO 00000 Frm 00298 Fmt 8010 Sfmt 8010 Q:\40\256165.XXX PC31

exit velocity determinations made during the performance test as specified in §63.11; continuous records of the flare pilot flame or flare flame monitoring and records of all periods of operations during which the pilot flame or the flare flame is absent.

(5) Where an owner or operator subject to the provisions of this subpart seeks to demonstrate compliance with §63.1959(b)(2)(iii)(C) through use of a landfill gas treatment system:

(i) *Bypass records*. Records of the flow of landfill gas to, and bypass of, the treatment system.

(ii) *Site-specific treatment monitoring plan*. Beginning no later than September 27, 2021, the owner or operator must prepare a site-specific treatment monitoring plan to include:

(A) Monitoring records of parameters that are identified in the treatment system monitoring plan and that ensure the treatment system is operating properly for each intended end use of the treated landfill gas. At a minimum, records should include records of filtration, de-watering, and compression parameters that ensure the treatment system is operating properly for each intended end use of the treated landfill gas.

(B) Monitoring methods, frequencies, and operating ranges for each monitored operating parameter based on manufacturer's recommendations or engineering analysis for each intended end use of the treated landfill gas.

(C) Documentation of the monitoring methods and ranges, along with justification for their use.

(D) List of responsible staff (by job title) for data collection.

(E) Processes and methods used to collect the necessary data.

(F) Description of the procedures and methods that are used for quality assurance, maintenance, and repair of all continuous monitoring systems (CMS).

(c) Except as provided in §63.1981(d)(2), each owner or operator of a controlled landfill subject to the provisions of this subpart must keep for 5 years up-to-date, readily accessible continuous records of the equipment operating parameters specified to be monitored in §63.1961 as well as up-to-date, readily accessible records for periods of operation during which the parameter boundaries established during the most recent performance test are exceeded.

(1) The following constitute exceedances that must be recorded and reported under §63.1981(h):

(i) For enclosed combustors except for boilers and process heaters with design heat input capacity of 44 megawatts (150 million Btu per hour) or greater, all 3-hour periods of operation during which the average temperature was more than 28 degrees Celsius (82 degrees Fahrenheit) below the average combustion temperature during the most recent performance test at which compliance with §63.1959(b)(2)(iii) was determined.

(ii) For boilers or process heaters, whenever there is a change in the location at which the vent stream is introduced into the flame zone as required under paragraph (b)(3) of this section.

(2) Each owner or operator subject to the provisions of this subpart must keep up-to-date, readily accessible continuous records of the indication of flow to the control system and the indication of bypass flow or records of monthly inspections of car-seals or lock-and-key configurations used to seal bypass lines, specified under §63.1961(b)(2)(ii), (c)(2)(ii), and (g)(2).

(3) Each owner or operator subject to the provisions of this subpart who uses a boiler or process heater with a design heat input capacity of 44 megawatts or greater to comply with §63.1959(b)(2)(iii) must keep an up-to-date, readily accessible record of all periods of operation of the boiler or process heater. Examples of such records could include records of steam use, fuel use, or monitoring data collected pursuant to other state, local, tribal, or federal regulatory requirements.

(4) Each owner or operator seeking to comply with the provisions of this subpart by use of a non-enclosed flare must keep up-to-date, readily accessible continuous records of the flame or flare pilot flame monitoring specified under §63.1961(c), and up-to-date, readily accessible records of all periods of operation in which the flame or flare pilot flame is absent.

(5) Each owner or operator of a landfill seeking to comply with §63.1959(b)(2) using an active collection

sfrattini on LAPJZKW1R2 with $$_JOB
VerDate Sep<11>2014 09:16 Apr 04, 2023 Jkt 256165 PO 00000 Frm 00299 Fmt 8010 Sfmt 8010 Q:\40\256165.XXX PC31

system designed in accordance with § 63.1959(b)(2)(ii) must keep records of periods when the collection system or control device is not operating.

(6) Where an owner or operator subject to the provisions of this subpart seeks to demonstrate compliance with the operational standard in § 63.1958(e)(1), the date, time, and duration of each startup and/or shutdown period, recording the periods when the affected source was subject to the standard applicable to startup and shutdown.

(7) Where an owner or operator subject to the provisions of this subpart seeks to demonstrate compliance with the operational standard in § 63.1958(e)(1), in the event that an affected unit fails to meet an applicable standard, record the information below in this paragraph:

(i) For each failure record the date, time and duration of each failure and the cause of such events (including unknown cause, if applicable).

(ii) For each failure to meet an applicable standard; record and retain a list of the affected sources or equipment.

(iii) Record actions taken to minimize emissions in accordance with the general duty of § 63.1955(c) and any corrective actions taken to return the affected unit to its normal or usual manner of operation.

(8) Beginning no later than September 27, 2021, in lieu of the requirements specified in § 63.8(d)(3) of subpart A you must keep the written procedures required by § 63.8(d)(2) on record for the life of the affected source or until the affected source is no longer subject to the provisions of this part, to be made available for inspection, upon request, by the Administrator. If the performance evaluation plan is revised, you must keep previous (*i.e.*, superseded) versions of the performance evaluation plan on record to be made available for inspection, upon request, by the Administrator, for a period of 5 years after each revision to the plan. The program of corrective action should be included in the plan required under § 63.8(d)(2).

(d) Except as provided in § 63.1981(d)(2), each owner or operator subject to the provisions of this subpart must keep for the life of the collection system an up-to-date, readily accessible plot map showing each existing and planned collector in the system and providing a unique identification location label for each collector.

(1) Each owner or operator subject to the provisions of this subpart must keep up-to-date, readily accessible records of the installation date and location of all newly installed collectors as specified under § 63.1960(b).

(2) Each owner or operator subject to the provisions of this subpart must keep readily accessible documentation of the nature, date of deposition, amount, and location of asbestos-containing or nondegradable waste excluded from collection as provided in § 63.1962(a)(3)(i) as well as any nonproductive areas excluded from collection as provided in § 63.1962(a)(3)(ii).

(e) Except as provided in § 63.1981(d)(2), each owner or operator subject to the provisions of this subpart must keep for at least 5 years up-to-date, readily accessible records of the following:

(1) All collection and control system exceedances of the operational standards in § 63.1958, the reading in the subsequent month whether or not the second reading is an exceedance, and the location of each exceedance.

(2) Each owner or operator subject to the control provisions of this subpart must keep records of each wellhead temperature monitoring value of greater than 55 degrees Celsius (131 degrees Fahrenheit), each wellhead nitrogen level at or above 20 percent, and each wellhead oxygen level at or above 5 percent, except:

(i) When an owner or operator subject to the provisions of this subpart seeks to demonstrate compliance with the compliance provisions for wellhead temperature in § 63.1958(c)(1), but no later than September 27, 2021, the records of each wellhead temperature monitoring value of 62.8 degrees Celsius (145 degrees Fahrenheit) or above instead of values greater than 55 degrees Celsius (131 degrees Fahrenheit).

(ii) Each owner or operator required to conduct the enhanced monitoring provisions in § 63.1961(a)(5), must also keep records of all enhanced monitoring activities.

sfrattini on LAPJZKW1R2 with $$_JOB
VerDate Sep<11>2014 09:16 Apr 04, 2023 Jkt 256165 PO 00000 Frm 00300 Fmt 8010 Sfmt 8010 Q:\40\256165.XXX PC31

(iii) Each owner or operator required to submit the *24-hour high temperature report in* §63.1981(k), must also keep a record of the email transmission.

(3) For any root cause analysis for which corrective actions are required in §63.1960(a)(3)(i)(A) or (a)(4)(i)(A), keep a record of the root cause analysis conducted, including a description of the recommended corrective action(s) taken, and the date(s) the corrective action(s) were completed.

(4) For any root cause analysis for which corrective actions are required in §63.1960(a)(3)(i)(B) or (a)(4)(i)(B), keep a record of the root cause analysis conducted, the corrective action analysis, the date for corrective action(s) already completed following the positive pressure reading or high temperature reading, and, for action(s) not already completed, a schedule for implementation, including proposed commencement and completion dates.

(5) For any root cause analysis for which corrective actions are required in §63.1960(a)(3)(i)(C) or (a)(4)(i)(C), keep a record of the root cause analysis conducted, the corrective action analysis, the date for corrective action(s) already completed following the positive pressure reading or high temperature reading, for action(s) not already completed, a schedule for implementation, including proposed commencement and completion dates, and a copy of any comments or final approval on the corrective action analysis or schedule from the Administrator.

(f) Landfill owners or operators who convert design capacity from volume to mass or mass to volume to demonstrate that landfill design capacity is less than 2.5 million Mg or 2.5 million m^3, as provided in the definition of ''design capacity,'' must keep readily accessible, on-site records of the annual recalculation of site-specific density, design capacity, and the supporting documentation. Off-site records may be maintained if they are retrievable within 4 hours. Either paper copy or electronic formats are acceptable.

(g) Except as provided in §63.1981(d)(2), each owner or operator subject to the provisions of this subpart must keep for at least 5 years up-to-date, readily accessible records of all collection and control system monitoring data for parameters measured in §63.1961(a)(1) through (6).

(h) Where an owner or operator subject to the provisions of this subpart seeks to demonstrate compliance with the operational standard for temperature in §63.1958(c)(1), you must keep the following records.

(1) Records of the landfill gas temperature on a monthly basis as monitored in §63.1960(a)(4).

(2) Records of enhanced monitoring data at each well with a measurement of landfill gas temperature greater than 62.8 degrees Celsius (145 degrees Fahrenheit) as gathered in §63.1961(a)(5) and (6).

(i) Any records required to be maintained by this subpart that are submitted electronically via the EPA's CEDRI may be maintained in electronic format. This ability to maintain electronic copies does not affect the requirement for facilities to make records, data, and reports available upon request to a delegated air agency or the EPA as part of an on-site compliance evaluation.

(ii) [Reserved]

[85 FR 17261, Mar. 26, 2020, as amended at 85 FR 64401, Oct. 13, 2020]

OTHER REQUIREMENTS AND INFORMATION

§63.1985 Who enforces this subpart?

(a) This subpart can be implemented and enforced by the EPA, or a delegated authority such as the applicable state, local, or tribal agency. If the EPA Administrator has delegated authority to a state, local, or tribal agency, then that agency as well as the EPA has the authority to implement and enforce this subpart. Contact the applicable EPA Regional office to find out if this subpart is delegated to a state, local, or tribal agency.

(b) In delegating implementation and enforcement authority of this subpart to a state, local, or tribal agency under subpart E of this part, the authorities contained in paragraph (c) of this section are retained by the EPA Administrator and are not transferred to the state, local, or tribal agency.

(c) The authorities that will not be delegated to state, local, or tribal

sfrattini on LAPJZKW1R2 with $$_JOB
VerDate Sep<11>2014 09:16 Apr 04, 2023 Jkt 256165 PO 00000 Frm 00301 Fmt 8010 Sfmt 8010 Q:\40\256165.XXX PC31

agencies are as follows. Approval of alternatives to the emission standards in §§ 63.1955 through 63.1962. Where this subpart references part 60, subpart WWW of this subchapter, the cited provisions will be delegated according to the delegation provisions of part 60, subpart WWW of this subchapter. For this subpart, the EPA also retains the authority to approve methods for determining the NMOC concentration in § 63.1959(a)(3) and the method for determining the site-specific methane generation rate constant k in § 63.1959(a)(4).

[85 FR 17261, Mar. 26, 2020, as amended at 87 FR 8204, Feb. 14, 2022]

§ 63.1990 What definitions apply to this subpart?

Terms used in this subpart are defined in the Clean Air Act, 40 CFR part 60, subparts A, Cc, Cf, WWW, and XXX; 40 CFR part 62, subpart GGG, and subpart A of this part, and this section that follows:

Active collection system means a gas collection system that uses gas mover equipment.

Active landfill means a landfill in which solid waste is being placed or a landfill that is planned to accept waste in the future.

Bioreactor means an MSW landfill or portion of an MSW landfill where any liquid other than leachate (leachate includes landfill gas condensate) is added in a controlled fashion into the waste mass (often in combination with recirculating leachate) to reach a minimum average moisture content of at least 40 percent by weight to accelerate or enhance the anaerobic (without oxygen) biodegradation of the waste.

Closed area means a separately lined area of an MSW landfill in which solid waste is no longer being placed. If additional solid waste is placed in that area of the landfill, that landfill area is no longer closed. The area must be separately lined to ensure that the landfill gas does not migrate between open and closed areas.

Closed landfill means a landfill in which solid waste is no longer being placed, and in which no additional solid wastes will be placed without first filing a notification of modification as prescribed under § 63.9(b). Once a notification of modification has been filed, and additional solid waste is placed in the landfill, the landfill is no longer closed.

Closure means that point in time when a landfill becomes a closed landfill.

Commercial solid waste means all types of solid waste generated by stores, offices, restaurants, warehouses, and other nonmanufacturing activities, excluding residential and industrial wastes.

Controlled landfill means any landfill at which collection and control systems are required under this subpart as a result of the nonmethane organic compounds emission rate. The landfill is considered controlled at the time a collection and control system design plan is submitted in compliance with § 60.752(b)(2)(i) of this chapter or in compliance with § 63.1959(b)(2)(i).

Corrective action analysis means a description of all reasonable interim and long-term measures, if any, that are available, and an explanation of why the selected corrective action(s) is/are the best alternative(s), including, but not limited to, considerations of cost effectiveness, technical feasibility, safety, and secondary impacts.

Cover penetration means a wellhead, a part of a landfill gas collection or operations system, and/or any other object that completely passes through the landfill cover. The landfill cover includes that portion which covers the waste, as well as the portion which borders the waste extended to the point where it is sealed with the landfill liner or the surrounding land mass. Examples of what is not a penetration for purposes of this subpart include but are not limited to: Survey stakes, fencing including litter fences, flags, signs, utility posts, and trees so long as these items do not pass through the landfill cover.

Design capacity means the maximum amount of solid waste a landfill can accept, as indicated in terms of volume or mass in the most recent permit issued by the state, local, or tribal agency responsible for regulating the landfill, plus any in-place waste not accounted for in the most recent permit. If the owner or operator chooses to

sfrattini on LAPJZKW1R2 with $$_JOB
VerDate Sep<11>2014 09:16 Apr 04, 2023 Jkt 256165 PO 00000 Frm 00302 Fmt 8010 Sfmt 8010 Q:\40\256165.XXX PC31

convert the design capacity from volume to mass or from mass to volume to demonstrate its design capacity is less than 2.5 million Mg or 2.5 million m^3, the calculation must include a site-specific density, which must be recalculated annually.

Deviation before September 28, 2021, means any instance in which an affected source subject to this subpart, or an owner or operator of such a source:

(1) Fails to meet any requirement or obligation established by this subpart, including, but not limited to, any emissions limitation (including any operating limit) or work practice requirement;

(2) Fails to meet any term or condition that is adopted to implement an applicable requirement in this subpart and that is included in the operating permit for any affected source required to obtain such a permit; or

(3) Fails to meet any emission limitation, (including any operating limit), or work practice requirement in this subpart during SSM, regardless of whether or not such failure is permitted by this subpart.

Deviation beginning no later than September 27, 2021, means any instance in which an affected source subject to this subpart or an owner or operator of such a source:

(1) Fails to meet any requirement or obligation established by this subpart including but not limited to any emission limit, or operating limit, or work practice requirement; or

(2) Fails to meet any term or condition that is adopted to implement an applicable requirement in this subpart and that is included in the operating permit for any affected source required to obtain such a permit.

Disposal facility means all contiguous land and structures, other appurtenances, and improvements on the land used for the disposal of solid waste.

Emissions limitation means any emission limit, opacity limit, operating limit, or visible emissions limit.

Enclosed combustor means an enclosed firebox which maintains a relatively constant limited peak temperature generally using a limited supply of combustion air. An enclosed flare is considered an enclosed combustor.

EPA approved State plan means a State plan that EPA has approved based on the requirements in 40 CFR part 60, subpart B to implement and enforce 40 CFR part 60, subparts Cc or Cf. An approved state plan becomes effective on the date specified in the document published in the FEDERAL REGISTER announcing EPA's approval.

EPA approved Tribal plan means a plan submitted by a tribal authority pursuant to 40 CFR parts 9, 35, 49, 50, and 81 to implement and enforce 40 CFR part 60, subpart Cc or subpart Cf.

Federal plan means the EPA plan to implement 40 CFR part 60, subparts Cc or Cf for existing MSW landfills located in states and Indian country where state plans or tribal plans are not currently in effect. On the effective date of an EPA approved state or tribal plan, the Federal Plan no longer applies. The Federal Plan implementing 40 CFR part 60, subpart Cc is found at 40 CFR part 62, subpart GGG.

Flare means an open combustor without enclosure or shroud.

Gas mover equipment means the equipment (*i.e.*, fan, blower, compressor) used to transport landfill gas through the header system.

Household waste means any solid waste (including garbage, trash, and sanitary waste in septic tanks) derived from households (including, but not limited to, single and multiple residences, hotels and motels, bunkhouses, ranger stations, crew quarters, campgrounds, picnic grounds, and day-use recreation areas). Household waste does not include fully segregated yard waste. Segregated yard waste means vegetative matter resulting exclusively from the cutting of grass, the pruning and/or removal of bushes, shrubs, and trees, the weeding of gardens, and other landscaping maintenance activities. Household waste does not include construction, renovation, or demolition wastes, even if originating from a household.

Industrial solid waste means solid waste generated by manufacturing or industrial processes that is not a hazardous waste regulated under Subtitle C of the Resource Conservation and Recovery Act, 40 CFR parts 264 and 265.

sfrattini on LAPJZKW1R2 with $$_JOB
VerDate Sep<11>2014 09:16 Apr 04, 2023 Jkt 256165 PO 00000 Frm 00303 Fmt 8010 Sfmt 8010 Q:\40\256165.XXX PC31

Such waste may include, but is not limited to, waste resulting from the following manufacturing processes: Electric power generation; fertilizer/agricultural chemicals; food and related products/by-products; inorganic chemicals; iron and steel manufacturing; leather and leather products; nonferrous metals manufacturing/foundries; organic chemicals; plastics and resins manufacturing; pulp and paper industry; rubber and miscellaneous plastic products; stone, glass, clay, and concrete products; textile manufacturing; transportation equipment; and water treatment. This term does not include mining waste or oil and gas waste.

Interior well means any well or similar collection component located inside the perimeter of the landfill waste. A perimeter well located outside the landfilled waste is not an interior well.

Landfill means an area of land or an excavation in which wastes are placed for permanent disposal, and that is not a land application unit, surface impoundment, injection well, or waste pile as those terms are defined under § 257.2 of this chapter.

Lateral expansion means a horizontal expansion of the waste boundaries of an existing MSW landfill. A lateral expansion is not a modification unless it results in an increase in the design capacity of the landfill.

Leachate recirculation means the practice of taking the leachate collected from the landfill and reapplying it to the landfill by any of one of a variety of methods, including pre-wetting of the waste, direct discharge into the working face, spraying, infiltration ponds, vertical injection wells, horizontal gravity distribution systems, and pressure distribution systems.

Modification means an increase in the permitted volume design capacity of the landfill by either lateral or vertical expansion based on its permitted design capacity after November 7, 2000. Modification does not occur until the owner or operator commences construction on the lateral or vertical expansion.

Municipal solid waste landfill or *MSW landfill* means an entire disposal facility in a contiguous geographical space where household waste is placed in or on land. An MSW landfill may also receive other types of RCRA Subtitle D wastes (§ 257.2 of this chapter) such as commercial solid waste, nonhazardous sludge, conditionally exempt small quantity generator waste, and industrial solid waste. Portions of an MSW landfill may be separated by access roads. An MSW landfill may be publicly or privately owned. An MSW landfill may be a new MSW landfill, an existing MSW landfill, or a lateral expansion.

Municipal solid waste landfill emissions or *MSW landfill emissions* means gas generated by the decomposition of organic waste deposited in an MSW landfill or derived from the evolution of organic compounds in the waste.

NMOC means nonmethane organic compounds, as measured according to the provisions of § 63.1959.

Nondegradable waste means any waste that does not decompose through chemical breakdown or microbiological activity. Examples are, but are not limited to, concrete, municipal waste combustor ash, and metals.

Passive collection system means a gas collection system that solely uses positive pressure within the landfill to move the gas rather than using gas mover equipment.

Root cause analysis means an assessment conducted through a process of investigation to determine the primary cause, and any other contributing causes, of an exceedance of a standard operating parameter at a wellhead.

Segregated yard waste means vegetative matter resulting exclusively from the cutting of grass, the pruning and/or removal of bushes, shrubs, and trees, the weeding of gardens, and other landscaping maintenance activities.

Sludge means the term sludge as defined in § 258.2 of this chapter.

Solid waste means the term solid waste as defined in § 258.2 of this chapter.

Sufficient density means any number, spacing, and combination of collection system components, including vertical wells, horizontal collectors, and surface collectors, necessary to maintain emission and migration control as determined by measures of performance set forth in this subpart.

sfrattini on LAPJZKW1R2 with $$_JOB
VerDate Sep<11>2014 09:16 Apr 04, 2023 Jkt 256165 PO 00000 Frm 00304 Fmt 8010 Sfmt 8010 Q:\40\256165.XXX PC31

Sufficient extraction rate means a rate sufficient to maintain a negative pressure at all wellheads in the collection system without causing air infiltration, including any wellheads connected to the system as a result of expansion or excess surface emissions, for the life of the blower.

Treated landfill gas means landfill gas processed in a treatment system as defined in this subpart.

Treatment system means a system that filters, de-waters, and compresses landfill gas for sale or beneficial use.

Untreated landfill gas means any landfill gas that is not treated landfill gas.

Work practice requirement means any design, equipment, work practice, or operational standard, or combination thereof, that is promulgated pursuant to section 112(h) of the Clean Air Act.

TABLE 1 TO SUBPART AAAA OF PART 63—APPLICABILITY OF NESHAP GENERAL PROVISIONS TO SUBPART AAAA

As specified in this subpart, you must meet each requirement in the following table that applies to you. The owner or operator may begin complying with the provisions that apply no later than September 27, 2021, any time before that date.

TABLE 1 TO SUBPART AAAA OF PART 63—APPLICABILITY OF NESHAP GENERAL PROVISIONS TO SUBPART AAAA

Part 63 citation	Description	Applicable to subpart AAAA before September 28, 2021	Applicable to subpart AAAA no later than September 27, 2021	Explanation
§ 63.1(a)	Applicability: General applicability of NESHAP in this part.	Yes	Yes.	
§ 63.1(b)	Applicability determination for stationary sources.	Yes	Yes.	
§ 63.1(c)	Applicability after a standard has been set.	No [1]	Yes.	
§ 63.1(e)	Applicability of permit program before relevant standard is set.	Yes	Yes.	
§ 63.2	Definitions	Yes	Yes.	
§ 63.3	Units and abbreviations	No [1]	Yes.	
§ 63.4	Prohibited activities and circumvention	Yes	Yes.	
§ 63.5(a)	Construction/reconstruction	No [1]	Yes.	
§ 63.5(b)	Requirements for existing, newly constructed, and reconstructed sources.	Yes	Yes.	
§ 63.5(d)	Application for approval of construction or reconstruction.	No [1]	Yes.	
§ 63.5(e) and (f)	Approval of construction and reconstruction.	No [1]	Yes.	
§ 63.6(a)	Compliance with standards and maintenance requirements—applicability.	No [1]	Yes.	
§ 63.6(b) and (c)	Compliance dates for new, reconstructed, and existing sources.	No [1]	Yes.	
§ 63.6(e)(1)(i)–(ii)	Operation and maintenance requirements.	Yes	No	See § 63.1955(c) for general duty requirements.
§ 63.6(e)(3)(i)–(ix)	SSM plan	Yes	No.	
§ 63.6(f)(1)	Exemption of nonopacity emission standards during SSM.	No	No.	
§ 63.6(f)(2) and (3)	Compliance with nonopacity emission standards.	Yes	Yes.	
§ 63.6(g)	Use of an alternative nonopacity standard.	No [1]	Yes.	
§ 63.6(h)	Compliance with opacity and visible emission standards.	No [1]	No	Subpart AAAA does not prescribe opacity or visible emission standards.
§ 63.6(i)	Extension of compliance with emission standards.	No [1]	Yes.	
§ 63.6(j)	Exemption from compliance with emission standards.	No [1]	Yes.	
§ 63.7	Performance testing	No [1]	Yes.	
§ 63.7(e)(1)	Conditions for performing performance tests.	No [1]	No	40 CFR 63.1959(f) specifies the conditions for performing performance tests.

sfrattini on LAPJZKW1R2 with $$_JOB
VerDate Sep<11>2014 09:16 Apr 04, 2023 Jkt 256165 PO 00000 Frm 00305 Fmt 8010 Sfmt 8002 Q:\40\256165.XXX PC31

TABLE 1 TO SUBPART AAAA OF PART 63—APPLICABILITY OF NESHAP GENERAL PROVISIONS TO SUBPART AAAA—Continued

Part 63 citation	Description	Applicable to subpart AAAA before September 28, 2021	Applicable to subpart AAAA no later than September 27, 2021	Explanation
§ 63.8(a) and (b)	Monitoring requirements—Applicability and conduct of monitoring.	No [1]	Yes.	
§ 63.8(c)(1)	Operation and Maintenance of continuous emissions monitoring system.	No [1]	Yes.	
§ 63.8(c)(1)(i)	Operation and Maintenance Requirements.	No [1]	No	Unnecessary due to the requirements of § 63.8(c)(1) and the requirements for a quality control plan for monitoring equipment in § 63.8(d)(2).
§ 63.8(c)(1)(ii)	Operation and Maintenance Requirements.	No [1]	No.	
§ 63.8(c)(1)(iii)	SSM plan for monitors	No [1]	No.	
§ 63.8(c)(2)–(8)	Monitoring requirements	No [1]	Yes.	
§ 63.8(d)(1)	Quality control for monitors	No [1]	Yes.	
§ 63.8(d)(2)	Quality control for monitors	No [1]	Yes.	
§ 63.8(d)(3)	Quality control records	No [1]	No	See § 63.1983(c)(8).
§ 63.9(a), (c), and (d).	Notifications	No [1]	Yes.	
§ 63.9(b)	Initial notifications	No [1]	Yes [2].	
§ 63.9(e)	Notification of performance test	No [1]	Yes [2].	
§ 63.9(f)	Notification of visible emissions/opacity test.	No [1]	No	Subpart AAAA does not prescribe opacity or visible emission standards.
§ 63.9(g)	Notification when using CMS	No [1]	Yes [2].	
§ 63.9(h)	Notification of compliance status	No [1]	Yes [2].	
§ 63.9(i)	Adjustment of submittal deadlines	No [1]	Yes.	
§ 63.9(j)	Change in information already provided	No [1]	Yes.	
§ 63.10(a)	Recordkeeping and reporting—general	No [1]	Yes.	
§ 63.10(b)(1)	General recordkeeping	No [1]	Yes.	
§ 63.10(b)(2)(i)	Startup and shutdown records	Yes	No	See § 63.1983(c)(6) for recordkeeping for periods of startup and shutdown.
§ 63.10(b)(2)(ii)	Recordkeeping of failures to meet a standard.	Yes	No	See § 63.1983(c)(6)–(7) for recordkeeping for any exceedance of a standard.
§ 63.10(b)(2)(iii)	Recordkeeping of maintenance on air pollution control equipment.	Yes	Yes.	
§ 63.10(b)(2)(iv)–(v)	Actions taken to minimize emissions during SSM.	Yes	No	See § 63.1983(c)(7) for recordkeeping of corrective actions to restore compliance.
§ 63.10(b)(2)(vi)	Recordkeeping for CMS malfunctions	No[1]	Yes.	
§ 63.10(b)(2)(vii)–(xiv).	Other Recordkeeping of compliance measurements.	No[1]	Yes.	
§ 63.10(c)	Additional recordkeeping for sources with CMS.	No [1]	No	See § 63.1983 for required CMS recordkeeping.
§ 63.10(d)(1)	General reporting	No [1]	Yes.	
§ 63.10(d)(2)	Reporting of performance test results	No [1]	Yes.	
§ 63.10(d)(3)	Reporting of visible emission observations.	No [1]	No.	
§ 63.10(d)(4)	Progress reports for compliance date extensions.	No [1]	Yes.	
§ 63.10(d)(5)	SSM reporting	Yes	No	All exceedances must be reported in the semi-annual report required by § 63.1981(h).
§ 63.10(e)	Additional reporting for CMS systems	No [1]	Yes.	
§ 63.10(f)	Recordkeeping/reporting waiver	No [1]	Yes.	
§ 63.11	Control device requirements/flares	No [1]	Yes	§ 60.18 is required before September 27, 2021. However, § 60.18 and 63.11 are equivalent.
§ 63.12(a)	State authority	Yes	Yes.	
§ 63.12(b)–(c)	State delegations	No [1]	Yes.	
§ 63.13	Addresses	No [1]	Yes.	
§ 63.14	Incorporation by reference	No [1]	Yes.	

sfrattini on LAPJZKW1R2 with $$_JOB
VerDate Sep<11>2014 09:16 Apr 04, 2023 Jkt 256165 PO 00000 Frm 00306 Fmt 8010 Sfmt 8002 Q:\40\256165.XXX PC31

TABLE 1 TO SUBPART AAAA OF PART 63—APPLICABILITY OF NESHAP GENERAL PROVISIONS TO SUBPART AAAA—Continued

Part 63 citation	Description	Applicable to subpart AAAA before September 28, 2021	Applicable to subpart AAAA no later than September 27, 2021	Explanation
§63.15	Availability of information and confidentiality.	Yes	Yes.	

[1] Before September 28, 2021, this subpart requires affected facilities to follow 40 CFR part 60, subpart WWW, which incorporates the General Provisions of 40 CFR part 60.
[2] If an owner or operator has complied with requirements that are parallel to the requirements of the part 63 citation of this table under 40 CFR part 60, subpart WWW or subpart XXX, or a state or federal plan that implements 40 CFR part 60, subpart Cc or Cf, then additional notification for that requirement is not required.

[85 FR 17261, Mar. 26, 2020, as amended at 85 FR 64401, Oct. 13, 2020; 87 FR 8204, Feb. 14, 2022]

Subpart BBBB [Reserved]

Subpart CCCC—National Emission Standards for Hazardous Air Pollutants: Manufacturing of Nutritional Yeast

SOURCE: 82 FR 48178, Oct. 16, 2017, unless otherwise noted.

WHAT THIS SUBPART COVERS

§63.2130 What is the purpose of this subpart?

This subpart establishes national emission limitations for hazardous air pollutants (HAP) emitted from manufacturers of nutritional yeast. This subpart also establishes requirements to demonstrate initial and continuous compliance with the emission limitations.

§63.2131 Am I subject to this subpart?

(a) You are subject to this subpart if you own or operate a nutritional yeast manufacturing facility that is, is located at, or is part of a major source of HAP emissions.

(1) A manufacturer of nutritional yeast is a facility that makes yeast for the purpose of becoming an ingredient in dough for bread or any other yeast-raised baked product, or for becoming a nutritional food additive intended for consumption by humans. A manufacturer of nutritional yeast does not include production of yeast intended for consumption by animals, such as an additive for livestock feed.

(2) A major source of HAP emissions is any stationary source or group of stationary sources located within a contiguous area and under common control that emits or has the potential to emit, considering controls, any single HAP at a rate of 9.07 megagrams (10 tons) or more per year or any combination of HAP at a rate of 22.68 megagrams (25 tons) or more per year.

(b) [Reserved]

§63.2132 What parts of my plant does this subpart cover?

(a) This subpart applies to each new, reconstructed, or existing ''affected source'' that produces *Saccharomyces cerevisiae* at a nutritional yeast manufacturing facility.

(b) The affected source is the collection of equipment used in the manufacture of the nutritional yeast species *Saccharomyces cerevisiae*. This collection of equipment includes fermentation vessels (fermenters), as described in paragraph (c) of this section. The collection of equipment used in the manufacture of the nutritional yeast species *Candida utilis* (torula yeast) is not part of the affected source.

(c) The emission limitations in this subpart apply to fermenters in the affected source that meet all of the criteria listed in paragraphs (c)(1) and (2) of this section.

(1) The fermenters are ''fed-batch'' as defined in §63.2192.

sfrattini on LAPJZKW1R2 with $$_JOB
VerDate Sep<11>2014 09:16 Apr 04, 2023 Jkt 256165 PO 00000 Frm 00307 Fmt 8010 Sfmt 8010 Q:\40\256165.XXX PC31

(2) The fermenters are used to support one of the last three fermentation stages in a production run (*i.e.*, third-to-last stage, second-to-last stage, and last stage), which may be referred to as ''stock, first generation, and trade,'' ''seed, semi-seed, and commercial,'' or ''CB4, CB5, and CB6'' stages.

(d) The emission limitations in this subpart do not apply to flask, pure-culture, yeasting-tank, or any other set-batch (as defined in § 63.2192) fermentation, and they do not apply to any operations after the last dewatering operation, such as filtration.

(e) The emission limitations in Table 1 to this subpart do not apply to fermenters during the production of specialty yeast (defined in § 63.2192).

(f) An affected source is a ''new affected source'' if you commenced construction of the affected source after October 19, 1998, and you met the applicability criteria in § 63.2131 at the time you commenced construction.

(g) An affected source is ''reconstructed'' if it meets the criteria for reconstruction as defined in § 63.2.

(h) An affected source is ''existing'' if it is not new or reconstructed.

§ 63.2133 When do I have to comply with this subpart?

(a) If you have a new or reconstructed affected source, then you must comply with paragraph (a)(1) or (2) of this section.

(1) If you start up your affected source before May 21, 2001, then you must comply with this subpart no later than May 21, 2001.

(2) If you start up your affected source on or after May 21, 2001, then you must comply with this subpart upon startup of your affected source.

(b) If you have an existing affected source, then you must comply with this subpart no later than May 21, 2004.

(c) If you have an area source that increases its emissions, or its potential to emit, so that it becomes a major source of HAP, then paragraphs (c)(1) and (2) of this section apply.

(1) Any portion of the existing facility that is a new affected source or a new reconstructed source must be in compliance with this subpart upon startup.

(2) All other parts of the affected source must be in compliance with this subpart by no later than 1 year after it becomes a major source.

(d) You must meet the notification requirements in § 63.2180 according to the schedule in § 63.2180 and in subpart A of this part.

EMISSION LIMITATIONS

§ 63.2140 What emission limitations must I meet?

You must meet the applicable emission limitations in Table 1 to this subpart, according to the timeline provided in Table 7 to this subpart.

GENERAL COMPLIANCE REQUIREMENTS

§ 63.2150 What are my general requirements for complying with this subpart?

(a) You must be in compliance with the applicable emission limitations in Table 1 to this subpart at all times, and demonstrate compliance according to paragraphs (a)(1) through (3) of this section.

(1) To demonstrate compliance with emission limitations by using the 98-Percent Option, you must follow the procedures of § 63.2171(b).

(2) To demonstrate compliance with emission limitations by using the Average Option, you must follow the procedures of § 63.2171(c).

(3) To demonstrate compliance with emission limitations by using the Batch Option, you must follow the procedures of § 63.2171(d).

(b) You must monitor VOC concentration continuously for each batch by using the applicable monitoring method in Table 8 to this subpart.

(c) If the date upon which you must demonstrate initial compliance as specified in § 63.2160 falls after the compliance date specified for your affected source in § 63.2133, then you must maintain a log detailing the operation and maintenance of the continuous emission monitoring systems and the process and emissions control equipment during the period between those dates.

(d) At all times, you must operate and maintain any affected source, including associated air pollution control equipment and monitoring equipment, in a manner consistent with safety and

sfrattini on LAPJZKW1R2 with $$_JOB
VerDate Sep<11>2014 09:16 Apr 04, 2023 Jkt 256165 PO 00000 Frm 00308 Fmt 8010 Sfmt 8010 Q:\40\256165.XXX PC31

good air pollution control practices for minimizing emissions. The general duty to minimize emissions does not require you to make any further efforts to reduce emissions if levels required by the applicable standard have been achieved. Determination of whether an affected source is operating in compliance with operation and maintenance requirements will be based on information available to the Administrator that may include, but is not limited to, monitoring results, review of operation and maintenance procedures, review of operation and maintenance records, and inspection of the affected source.

TESTING AND INITIAL COMPLIANCE REQUIREMENTS

§63.2160 By what date must I conduct an initial compliance demonstration?

(a) For each emission limitation in Table 1 to this subpart for which you demonstrate compliance using the Average Option, you must demonstrate initial compliance for the period ending on the last day of the month that is 12 calendar months (or 11 calendar months, if the compliance date for your affected source is the first day of the month) after the compliance date that is specified for your affected source in §63.2133.

(b) For each emission limitation in Table 1 to this subpart for which you demonstrate compliance using the Batch Option, you must demonstrate initial compliance for the period ending June 30 or December 31 (use whichever date is the first date following the compliance date that is specified for your affected source in §63.2133).

§63.2161 What performance tests and other procedures must I use if I monitor brew ethanol?

(a) You must conduct each performance test in Table 2 to this subpart that applies to you, as specified in paragraphs (b) through (f) of this section.

(b) You must conduct performance tests under such conditions as the Administrator specifies, based on representative performance of the affected source for the period being tested, and under the specific conditions that this subpart specifies in Table 2 to this subpart and in paragraphs (b)(1) through (4) of this section. You must record the process information that is necessary to document operating conditions during the test and include in such record an explanation to support that such conditions represent normal operation. Upon request, you must make available to the Administrator such records as may be necessary to determine the conditions of performance tests.

(1) You must conduct each performance test concurrently with brew ethanol monitoring to establish a brew-to-exhaust correlation as specified in paragraph (e) of this section.

(2) For each fermentation stage, you must conduct one run of the EPA Test Method 25A of 40 CFR part 60, appendix A–7, over the entire length of a batch. The three fermentation stages do not have to be from the same production run.

(3) You must obtain your test sample at a point in the exhaust-gas stream before you inject any dilution air. For fermenters, dilution air is any air not needed to control fermentation.

(4) You must record the results of the test for each fermentation stage.

(c) You may not conduct performance tests during periods of malfunction.

(d) You must collect data to correlate the brew ethanol concentration to the VOC concentration in the fermenter exhaust according to paragraphs (d)(1) through (3) of this section.

(1) You must collect a separate set of brew ethanol concentration data for each fed-batch fermentation stage while manufacturing the product that constitutes the largest percentage (by mass) of average annual production.

(2) You must measure brew ethanol as specified in §63.2164 concurrently with conducting a performance test for VOC in fermenter exhaust as specified in paragraph (b) of this section. You must measure brew ethanol at least once during each successive 30-minute period over the entire period of the performance test for VOC in fermenter exhaust.

(3) You must keep a record of the brew ethanol concentration data for each fermentation stage over the period of EPA Test Method 25A of 40 CFR part 60, appendix A–7, performance test.

sfrattini on LAPJZKW1R2 with $$_JOB
VerDate Sep<11>2014 09:16 Apr 04, 2023 Jkt 256165 PO 00000 Frm 00309 Fmt 8010 Sfmt 8010 Q:\40\256165.XXX PC31

(e) For each set of data that you collected under paragraphs (b) and (d) of this section, you must perform a linear regression of brew ethanol concentration (percent) on VOC fermenter exhaust concentration (parts per million by volume (ppmv) measured as propane). You must ensure the correlation between the brew ethanol concentration, as measured by the brew ethanol monitor, and the VOC fermenter exhaust concentration, as measured by EPA Test Method 25A of 40 CFR part 60, appendix A–7, is linear with a correlation coefficient of at least 0.90.

(f) You must calculate the VOC concentration in the fermenter exhaust for each batch using the brew ethanol concentration data according to Equation 1 of this section, and using the constants (CF and y) calculated by the applicable linear regression performed under paragraph (e) of this section.

$$BAVOC = BAE * CF + y \qquad \text{(Eq. 1)}$$

Where:

BAVOC = Batch-average concentration of VOC in fermenter exhaust (ppmv measured as propane), calculated for compliance demonstration

BAE = Batch-average concentration of brew ethanol in fermenter liquid (percent), measured by the brew ethanol monitor

CF = Constant established at performance test and representing the slope of the regression line

y = Constant established at performance test and representing the y-intercept of the regression line

§ 63.2162 When must I conduct subsequent performance tests if I monitor brew ethanol?

(a) For each emission limitation in Table 1 to this subpart for which compliance is demonstrated by monitoring brew ethanol concentration and calculating VOC concentration in the fermenter exhaust according to the procedures in § 63.2161, you must conduct an EPA Test Method 25A of 40 CFR part 60, appendix A–7, performance test and establish a brew-to-exhaust correlation according to the procedures in Table 2 to this subpart and in § 63.2161, at least once every year.

(b) The first subsequent performance test must be conducted no later than 365 calendar days after the initial performance test conducted according to § 63.2160. Each subsequent performance test must be conducted no later than 365 calendar days after the previous performance test. You must conduct a performance test for each 365 calendar day period during which you demonstrate compliance using the brew ethanol correlation developed according to § 63.2161.

§ 63.2163 If I monitor fermenter exhaust, what are my monitoring installation, operation, and maintenance requirements?

(a) You must install and certify a CEMS that generates a single combined response value for VOC concentration (VOC CEMS) according to the procedures and requirements in Performance Specification 8—Performance Specifications for Volatile Organic Compound Continuous Emission Monitoring Systems in Stationary Sources in appendix B to part 60 of this chapter.

(b) You must operate and maintain your VOC CEMS according to the procedures and requirements in Procedure 1—Quality Assurance Requirements for Gas Continuous Emission Monitoring Systems Used for Compliance Determination in appendix F to part 60 of this chapter, except with regard to provisions concerning relative accuracy test audit (RATA), cylinder gas audit (CGA), and relative accuracy audit (RAA) frequencies; out of control period definition; and CEMS data status during out of control periods; which are instead specified in this paragraph for frequencies; and § 63.8(c)(7) for the definition of and status of CEMS data during out of control periods.

(1) You must conduct a RATA at least once every 12 calendar quarters, in accordance with sections 8 and 11, as applicable, of Performance Specification 8.

sfrattini on LAPJZKW1R2 with $$_JOB
VerDate Sep<11>2014 09:16 Apr 04, 2023 Jkt 256165 PO 00000 Frm 00310 Fmt 8010 Sfmt 8010 Q:\40\256165.XXX PC31
ER16OC17.000<GPH>

(2) You must conduct a CGA or RAA in the calendar quarters during which a RATA is not conducted, but in no more than 11 quarters in succession.

(3) As necessary, rather than relying on citation 2 of Procedure 1 of appendix F to 40 CFR part 60, you must rely on EPA/600/R–12/531 (incorporated by reference, see § 63.14).

(4) Your affected source must meet the criteria of Performance Specification 8, section 13.2.

(c) You must use Method 25A in appendix A–7 to part 60 of this chapter as the Reference Method.

(d) You must calibrate your VOC CEMS with propane.

(e) You must set your VOC CEMS span at less than 5 times the relevant VOC emission limitation given in Table 1 of this subpart. Note that the EPA considers 1.5 to 2.5 times the relevant VOC emission limitation to be the optimum range, in general.

(f) You must complete the performance evaluation and submit the performance evaluation report before the compliance date that is specified for your affected source in § 63.2133.

(g) You must monitor VOC concentration in fermenter exhaust at any point prior to dilution of the exhaust stream.

(h) You must collect data using the VOC CEMS at all times during each batch monitoring period, except for periods of monitoring system malfunctions, required monitoring system quality assurance or quality control activities (including, as applicable, calibration checks and required zero and span adjustments), and any scheduled maintenance.

(i) For each CEMS, you must record the results of each inspection, calibration, and validation check.

(j) You must check the zero (low-level) and high-level calibration drifts for each CEMS in accordance with the applicable Performance Specification of 40 CFR part 60, appendix B. You must adjust the zero (low-level) and high-level calibration drifts, at a minimum, whenever the zero (low-level) drift exceeds 2 times the limits of the applicable Performance Specification. You must perform the calibration drift checks at least once daily except under the conditions of paragraphs (j)(1) through (3) of this section.

(1) If a 24-hour calibration drift check for your CEMS is performed immediately prior to, or at the start of, a batch monitoring period of a duration exceeding 24 hours, then you are not required to perform 24-hour-interval calibration drift checks during that batch monitoring period.

(2) If the 24-hour calibration drift exceeds 2.5 percent of the span value in fewer than 5 percent of the checks over a 1-month period, and the 24-hour calibration drift never exceeds 7.5 percent of the span value, then you may reduce the frequency of calibration drift checks to at least weekly (once every 7 days).

(3) If, during two consecutive weekly checks, the weekly calibration drift exceeds 5 percent of the span value, then you must resume a frequency of at least 24-hour interval calibration checks until the 24-hour calibration checks meet the test of paragraph (j)(2) of this section.

§ 63.2164 If I monitor brew ethanol, what are my monitoring installation, operation, and maintenance requirements?

(a) You must install, operate, and maintain each brew ethanol monitor according to the manufacturer's specifications and in accordance with § 63.2150(d).

(b) Each of your brew ethanol monitors must complete a minimum of one cycle of operation (sampling, analyzing, and data recording) for each successive 30-minute period within each batch monitoring period. Except as specified in paragraph (c) of this section, you must have a minimum of two cycles of operation in a 1-hour period to have a valid hour of data.

(c) You must reduce the brew ethanol monitor data to arithmetic batch averages computed from two or more data points over each 1-hour period, except during periods when calibration, quality assurance, or maintenance activities pursuant to provisions of this part are being performed. During these periods, a valid hour of data must consist of at least one data point representing a 30-minute period.

sfrattini on LAPJZKW1R2 with $$_JOB
VerDate Sep<11>2014 09:16 Apr 04, 2023 Jkt 256165 PO 00000 Frm 00311 Fmt 8010 Sfmt 8010 Q:\40\256165.XXX PC31

(d) You must have valid brew ethanol monitor data from all operating hours over the entire batch monitoring period.

(e) You must set the brew ethanol monitor span to correspond to not greater than 5 times the relevant emission limitation; note that we consider 1.5 to 2.5 times the relevant emission limitation to be the optimum range, in general. You must use the brew-to-exhaust correlation equation established under § 63.2161(f) to determine the span value for your brew ethanol monitor that corresponds to the relevant emission limitation.

(f) For each brew ethanol monitor, you must record the results of each inspection, calibration, and validation check.

(g) The gas chromatograph (GC) that you use to calibrate your brew ethanol monitor must meet the requirements of paragraphs (g)(1) through (3) of this section.

(1) You must calibrate the GC at least daily, by analyzing standard solutions of ethanol in water (0.05 percent, 0.15 percent, and 0.3 percent).

(2) For use in calibrating the GC, you must prepare the standard solutions of ethanol using the procedures listed in paragraphs (g)(2)(i) through (vi) of this section.

(i) Starting with 100-percent ethanol, you must dry the ethanol by adding a small amount of anhydrous magnesium sulfate (granular) to 15–20 milliliters (ml) of ethanol.

(ii) You must place approximately 50 ml of water into a 100-ml volumetric flask and place the flask on a balance. You must tare the balance. You must weigh 2.3670 grams of the dry (anhydrous) ethanol into the volumetric flask.

(iii) You must add the 100-ml volumetric flask contents to a 1000-ml volumetric flask. You must rinse the 100-ml volumetric flask with water into the 1000-ml flask. You must bring the volume to 1000 ml with water.

(iv) You must place an aliquot into a sample bottle labeled ''0.3% Ethanol.''

(v) You must fill a 50-ml volumetric flask from the contents of the 1000-ml flask. You must add the contents of the 50-ml volumetric flask to a 100-ml volumetric flask and rinse the 50-ml flask into the 100-ml flask with water. You must bring the volume to 100 ml with water. You must place the contents into a sample bottle labeled ''0.15% Ethanol.''

(vi) With a 10-ml volumetric pipette, you must add two 10.0-ml volumes of water to a sample bottle labeled ''0.05% Ethanol.'' With a 10.0-ml volumetric pipette, you must pipette 10.0 ml of the 0.15 percent ethanol solution into the sample bottle labeled ''0.05% Ethanol.''

(3) For use in calibrating the GC, you must dispense samples of the standard solutions of ethanol in water in aliquots to appropriately labeled and dated glass sample bottles fitted with caps having a Teflon® seal. You may keep refrigerated samples unopened for 1 month. You must prepare new calibration standards of ethanol in water at least monthly.

(h) You must calibrate the brew ethanol monitor according to paragraphs (h)(1) through (3) of this section.

(1) To calibrate the brew ethanol monitor, you must inject a brew sample into a calibrated GC and compare the simultaneous ethanol value given by the brew ethanol monitor to that given by the GC. You must use either the Porapak® Q, 80–100 mesh, 6′ x ⅛″, stainless steel packed column; or the DB Wax, 0.53 millimeter x 30 meter capillary column.

(2) If a brew ethanol monitor value for ethanol differs by 20 percent or more from the corresponding GC ethanol value, you must determine the brew ethanol values throughout the rest of the batch monitoring period by injecting brew samples into the GC not less frequently than once every 30 minutes. From the time at which you detect a difference of 20 percent or more until the batch monitoring period ends, the GC data will serve as the brew ethanol monitor data.

(3) You must perform a calibration of the brew ethanol monitor at least four times per batch.

sfrattini on LAPJZKW1R2 with $$_JOB
VerDate Sep<11>2014 09:16 Apr 04, 2023 Jkt 256165 PO 00000 Frm 00312 Fmt 8010 Sfmt 8010 Q:\40\256165.XXX PC31

§63.2165 How do I demonstrate initial compliance with the emission limitations if I monitor fermenter exhaust?

(a) You must demonstrate initial compliance with each emission limitation in Table 1 to this subpart that applies to you according to the methods in Table 3 to this subpart.

(b) You must submit the Notification of Compliance Status containing the results of the initial compliance demonstration according to the requirements in §63.2180(f).

CONTINUOUS COMPLIANCE REQUIREMENTS

§63.2170 How do I monitor and collect data to demonstrate continuous compliance?

(a) You must monitor and collect data according to this section and §63.2163 or §63.2164.

(b) Except for periods of monitoring system malfunctions, required monitoring system quality assurance or control activities (including, as applicable, calibration checks and required zero and span adjustments), and any scheduled maintenance, you must collect data using the CEMS or brew ethanol monitor, as applicable, at all times during each batch monitoring period.

(c) You may not use data recorded during monitoring malfunctions, associated repairs, and required quality assurance or quality control activities in data averages and calculations used to report emission or operating levels, or to fulfill a data collection requirement. You must use all the data collected during all other periods in assessing the operation of the control system.

(d) Any hour during the batch monitoring period for which quality-assured VOC CEMS data or brew ethanol monitor data, as applicable, are not obtained is a deviation from monitoring requirements and is counted as an hour of monitoring system downtime.

§63.2171 How do I demonstrate continuous compliance with the emission limitations?

(a) You must demonstrate continuous compliance with each emission limitation in Table 1 to this subpart that applies to you according to the methods specified in Table 4 to this subpart and the applicable procedures of this section.

(b) To demonstrate compliance with emission limitations by using the 98-Percent Option, you must calculate the percentage of within-concentration batches (as defined in §63.2192) for each 12-month calculation period by following the procedures in this paragraph and paragraphs (e)(1) and (2) of this section. At the end of each calendar month, you must determine the percentage of batches that were in compliance with the applicable maximum concentration in the 12-month calculation period. The total number of batches in the calculation period is the sum of the numbers of batches of each fermentation stage for which emission limitations apply. To determine which batches are in the 12-month calculation period, you must include those batches for which the batch monitoring period ended at or after midnight on the first day of the period and exclude those batches for which the batch monitoring period did not end before midnight on the last day of the period.

(c) To demonstrate compliance with emission limitations by using the Average Option, you must follow the procedures in this paragraph and paragraphs (e)(1) and (2) of this section. At the end of each calendar month, you must determine the average VOC concentration from all batches in each fermentation stage in a 12-month calculation period. To determine which batches are in a 12-month calculation period, you must include those batches for which the batch monitoring period ended at or after midnight on the first day of the period and exclude those batches for which the batch monitoring period did not end before midnight on the last day of the period.

(d) To demonstrate compliance with emission limitations by using the Batch Option, you must determine the average VOC concentration in the fermenter exhaust for each batch of each fermentation stage in a semiannual reporting period (*i.e.*, January 1 through June 30 or July 1 through December 31). To determine which batches are in the semiannual reporting period, you must include those batches for which the batch monitoring period ended at or after midnight on the first day of

sfrattini on LAPJZKW1R2 with $$_JOB
VerDate Sep<11>2014 09:16 Apr 04, 2023 Jkt 256165 PO 00000 Frm 00313 Fmt 8010 Sfmt 8010 Q:\40\256165.XXX PC31

the period and exclude those batches for which the batch monitoring period did not end before midnight on the last day of the period.

(e) To demonstrate compliance with an emission limitation using a 12-month calculation period, you must follow the procedures in paragraphs (e)(1) and (2) of this section.

(1) The first 12-month calculation period begins on the compliance date that is specified for your affected source in § 63.2133 and ends on the last day of the month that includes the date 1 year after your compliance date, unless the compliance date for your affected source is the first day of the month, in which case the first 12-month calculation period ends on the last day of the month that is 11 calendar months after the compliance date.

(2) The second 12-month calculation period and each subsequent 12-month calculation period begins on the first day of the month following the first full month of the previous 12-month calculation period and ends on the last day of the month 11 calendar months later.

NOTIFICATION, REPORTS, AND RECORDS

§ 63.2180 What notifications must I submit and when?

(a) You must submit all of the notifications in §§ 63.7(b) and (c); 63.8(e), (f)(4) and (6); and 63.9(b) through (h) that apply to you by the dates specified.

(b) If you start up your affected source before May 21, 2001, you are not subject to the initial notification requirements of § 63.9(b)(2).

(c) If you are required to conduct a performance test as specified in § 63.2161 to this subpart, you must submit a notification of intent to conduct a performance test at least 60 calendar days before the performance test is scheduled to begin as required in § 63.7(b)(1).

(d) If you are required to conduct a performance evaluation as specified in § 63.2163, you must submit a notification of the date of the performance evaluation at least 60 days prior to the date the performance evaluation is scheduled to begin as required in § 63.8(e)(2).

(e) If you are required to conduct a performance test as specified in Table 2 to this subpart, you must submit a Notification of Compliance Status according to § 63.9(h)(2)(ii).

(f) For each initial compliance demonstration required in Table 3 to this subpart, you must submit the Notification of Compliance Status no later than July 31 or January 31, whichever date follows the initial compliance period that is specified for your affected source in § 63.2160(a) or (b). The first compliance report, described in § 63.2181(b)(1), serves as the Notification of Compliance Status.

§ 63.2181 What reports must I submit and when?

(a) You must submit each report in Table 5 to this subpart that applies to you.

(1) On and after October 16, 2017, you must also comply with reporting for performance tests or for performance evaluations as specified in paragraphs (a)(1)(i) and (ii) of this section.

(i) Within 60 days after the date of completing each performance test as required by this subpart, you must submit the results of the performance test following the procedures specified in paragraphs (a)(1)(i)(A) through (C) of this section.

(A) For data collected using test methods supported by the EPA's Electronic Reporting Tool (ERT) as listed on the EPA's ERT Web site (*https://www.epa.gov/electronic-reporting-air-emissions/electronic-reporting-tool-ert*) at the time of the test, you must submit the results of the performance test to the EPA via the Compliance and Emissions Data Reporting Interface (CEDRI). (CEDRI can be accessed through the EPA's Central Data Exchange (CDX) (*https://cdx.epa.gov/*).) Performance test data must be submitted in a file format generated through the use of the EPA's ERT or an alternate electronic file format consistent with the extensible markup language (XML) schema listed on the EPA's ERT Web site.

(B) For data collected using test methods that are not supported by the EPA's ERT as listed on the EPA's ERT Web site at the time of the test, you

sfrattini on LAPJZKW1R2 with $$_JOB
VerDate Sep<11>2014 09:16 Apr 04, 2023 Jkt 256165 PO 00000 Frm 00314 Fmt 8010 Sfmt 8010 Q:\40\256165.XXX PC31

must submit the results of the performance test to the Administrator at the appropriate address listed in §63.13, unless the Administrator agrees to or specifies an alternate reporting method.

(C) If you claim that some of the performance test information being submitted under paragraph (a)(1)(i)(A) of this section is confidential business information (CBI), you must submit a complete file generated through the use of the EPA's ERT or an alternate electronic file consistent with the XML schema listed on the EPA's ERT Web site, including information claimed to be CBI, on a compact disc, flash drive, or other commonly used electronic storage media to the EPA. The electronic media must be clearly marked as CBI and mailed to U.S. EPA/OAQPS/CORE CBI Office, Attention: Group Leader, Measurement Policy Group, MD C404–02, 4930 Old Page Rd., Durham, NC 27703. The same ERT or alternate file with the CBI omitted must be submitted to the EPA via the EPA's CDX as described in paragraph (a)(1)(i)(A) of this section.

(ii) Within 60 days after the date of completing each continuous monitoring system performance evaluation (as defined in §63.2), you must submit the results of the performance evaluation following the procedures specified in paragraphs (a)(1)(ii)(A) through (C) of this section.

(A) For performance evaluations of continuous monitoring systems measuring RATA pollutants that are supported by the EPA's ERT as listed on the EPA's ERT Web site at the time of the evaluation, you must submit the results of the performance evaluation to the EPA via the CEDRI. Performance evaluation data must be submitted in a file format generated through the use of the EPA's ERT or an alternate file format consistent with the XML schema listed on the EPA's ERT Web site.

(B) For any performance evaluations of continuous monitoring systems measuring RATA pollutants that are not supported by the EPA's ERT as listed on the EPA's ERT Web site at the time of the evaluation, you must submit the results of the performance evaluation to the Administrator at the appropriate address listed in §63.13, unless the Administrator agrees to or specifies an alternate reporting method.

(C) If you claim that some of the performance evaluation information being submitted is CBI, then you must submit a complete file generated through the use of the EPA's ERT or an alternate electronic file consistent with the XML schema listed on the EPA's ERT Web site, including information claimed to be CBI, on a compact disc, flash drive or other commonly used electronic storage media to the EPA. The electronic storage media must be clearly marked as CBI and mailed to U.S. EPA/OAQPS/CORE CBI Office, Attention: Group Leader, Measurement Policy Group, MD C404–02, 4930 Old Page Rd., Durham, NC 27703. The same ERT or alternate file with the CBI omitted must be submitted to the EPA via the EPA's CDX as described earlier in this paragraph.

(b) Unless the Administrator has approved a different schedule for submission of reports under §63.10(a), you must submit each report according to the schedule in Table 5 to this subpart and according to paragraphs (b)(1) through (5) of this section.

(1) The first compliance report must include the information specified in paragraph (c) of this section. If you are demonstrating compliance with an emission limitation using a 12-month calculation period (*e.g.*, the Average Option), then the first compliance report must cover the period beginning on the compliance date that is specified for your affected source in §63.2133 and ending on either June 30 or December 31 (use whichever date is the first date following the end of the first 12 calendar months after the compliance date that is specified for your affected source in §63.2133). If you are demonstrating compliance with an emission limitation using the Batch Option, then the first compliance report must cover the period beginning on the compliance date that is specified for your affected source in §63.2133 and ending on either June 30 or December 31 (use whichever date is the first date following the compliance date that is specified for your affected source in §63.2133).

sfrattini on LAPJZKW1R2 with $$_JOB
VerDate Sep<11>2014 09:16 Apr 04, 2023 Jkt 256165 PO 00000 Frm 00315 Fmt 8010 Sfmt 8010 Q:\40\256165.XXX PC31

(2) The first compliance report must be postmarked or delivered no later than July 31 or January 31, whichever date follows the end of the first compliance reporting period specified in paragraph (b)(1) of this section.

(3) Each subsequent compliance report must cover the semiannual reporting period from January 1 through June 30 or the semiannual reporting period from July 1 through December 31. Each subsequent compliance report must include the information specified in paragraph (c) of this section.

(4) Each subsequent compliance report must be postmarked or delivered no later than July 31 or January 31, whichever date is the first date following the end of the semiannual reporting period.

(5) For each affected source that is subject to permitting regulations pursuant to 40 CFR part 70 or part 71, and if the permitting authority has established dates for submitting semiannual reports pursuant to 40 CFR 70.6(a)(3)(iii)(A) or 40 CFR 71.6(a)(3)(iii)(A), you may submit the first and subsequent compliance reports according to the dates the permitting authority has established instead of according to the dates in paragraphs (b)(1) through (4) of this section.

(c) The compliance report must contain the information listed in paragraphs (c)(1) through (8) of this section.

(1) Company name and address.

(2) Statement by a responsible official with that official's name, title, and signature, certifying the accuracy of the content of the report.

(3) Date of report and beginning and ending dates of the reporting period.

(4) For each 12-month calculation period ending on a calendar month that falls within a reporting period for which you are using the 98-Percent Option to comply, the percentage of batches that are within-concentration batches.

(5) For each 12-month calculation period ending on a calendar month that falls within a reporting period for which you are using the 98-Percent Option to comply and your affected source fails to meet an applicable standard, the information for each batch for which BAVOC exceeded the applicable maximum VOC concentration in Table 1 to this subpart and whether the batch was in production during a period of malfunction or during another period.

(6) For each 12-month calculation period ending on a calendar month that falls within a reporting period for which you are using the Average Option to comply or for any reporting period for which you are using the Batch Option to comply, and your affected source meets an applicable standard, the information in paragraph (c)(6)(i) or (ii) of this section, depending on the compliance option selected from Table 1 to this subpart.

(i) If you are using the Average Option to comply, the average BAVOC of all batches in each fermentation stage for each 12-month calculation period ending on a calendar month that falls within the reporting period that did not exceed the applicable emission limitation.

(ii) If you are using the Batch Option to comply, a certification that BAVOC for each batch manufactured during the reporting period did not exceed applicable emission limitations.

(7) For each 12-month calculation period ending on a calendar month that falls within a reporting period for which you are using the Average Option to comply or for any reporting period for which you are using the Batch Option to comply and your affected source fails to meet an applicable standard, the information in paragraph (c)(7)(i) or (ii) of this section, depending on the compliance option selected from Table 1 to this subpart.

(i) If you are using the Average Option to comply, the average BAVOC of all batches in each fermentation stage for each 12-month calculation period that failed to meet the applicable standard; the fermenters that operated in each fermentation stage that failed to meet the applicable standard; the duration of each failure; an estimate of the quantity of VOC emitted over the emission limitation; a description of the method used to estimate the emissions; and the actions taken to minimize emissions and correct the failure.

(ii) If you are using the Batch Option to comply, the fermenters and batches that failed to meet the applicable standard; the date, time, and duration

sfrattini on LAPJZKW1R2 with $$_JOB
VerDate Sep<11>2014 09:16 Apr 04, 2023 Jkt 256165 PO 00000 Frm 00316 Fmt 8010 Sfmt 8010 Q:\40\256165.XXX PC31

of each failure; an estimate of the quantity of VOC emitted over the emission limitation; a description of the method used to estimate the emissions; and the actions taken to minimize emissions and correct the failure.

(8) The total operating hours for each fermenter, the total hours of monitoring system operation for each CEMS or brew ethanol monitor, and the total hours of monitoring system downtime for each CEMS or brew ethanol monitor.

§63.2182 What records must I keep?

(a) You must keep the records listed in paragraphs (a)(1) through (3) of this section.

(1) A copy of each notification and report that you submitted to comply with this subpart, including all documentation supporting any Notification of Compliance Status and compliance report that you submitted, according to the requirements in §63.10(b)(2)(xiv).

(2) Records of failures to meet a standard, specified in §63.2181(c)(5) and (7).

(3) Records of performance tests and performance evaluations as required in §63.10(b)(2)(viii) and (ix).

(b) For each affected source that monitors brew ethanol, you must keep records demonstrating the calculation of the brew-to-exhaust correlations specified in §63.2161.

(c) For each CEMS and brew ethanol monitor, you must keep the records listed in paragraphs (c)(1) through (5) of this section.

(1) Records described in §63.10(b)(2)(vi), (vii), (x), and (xi). The CEMS must allow the amount of excess zero (low-level) and high-level calibration drift measured at the interval checks to be quantified and recorded.

(2) Records described in §63.10(c)(1) through (6).

(3) Records of the quality control program as specified in §63.8(d), including the program of corrective action; the current version of the performance evaluation test plan, as specified in §63.8(e)(3); and previous (*i.e.*, superseded) versions of the performance evaluation test plan for a period of 5 years after each revision to the plan.

(4) Requests for alternatives to RATA for CEMS as required in §63.8(f)(6)(i).

(5) Records of each deviation from monitoring requirements, including a description of the time period during which the deviation occurred, the nature and cause of the deviation, the corrective action taken or preventive measures adopted, and the nature of repairs or adjustments to the monitoring system.

(d) You must keep the records required to show continuous compliance with each emission limitation that applies to you according to the requirements in Table 4 to this subpart.

(e) You must also keep the records listed in paragraphs (e)(1) through (3) of this section for each batch in your affected source.

(1) Unique batch identification number.

(2) Fermentation stage for which you are using the fermenter.

(3) Unique CEMS equipment identification number.

§63.2183 In what form and how long must I keep my records?

(a) Your records must be in a form suitable and readily available for expeditious review, according to §63.10(b)(1).

(b) As specified in §63.10(b)(1), you must keep each record for 5 years following the date of each occurrence, measurement, maintenance, corrective action, report, or record.

(c) You must keep each record on site for at least 2 years after the date of each occurrence, measurement, maintenance, corrective action, report, or record, according to §63.10(b)(1). You may keep the records off site for the remaining 3 years.

(d) Any records required to be maintained by this part that are submitted electronically via the EPA's CEDRI may be maintained in electronic format. This ability to maintain electronic copies does not affect the requirement for facilities to make records, data, and reports available upon request to a delegated air agency or the EPA as part of an on-site compliance evaluation.

(e) You must keep written procedures documenting the CEMS quality control

sfrattini on LAPJZKW1R2 with $$_JOB
VerDate Sep<11>2014 09:16 Apr 04, 2023 Jkt 256165 PO 00000 Frm 00317 Fmt 8010 Sfmt 8010 Q:\40\256165.XXX PC31

program on record for the life of the affected source or until the affected source is no longer subject to the provisions of this part, to be made available for inspection, upon request, by the Administrator.

OTHER REQUIREMENTS AND INFORMATION

§ 63.2190 What parts of the General Provisions apply to me?

Table 6 to this subpart shows which parts of the General Provisions in §§ 63.1 through 63.15 apply to you.

§ 63.2191 Who implements and enforces this subpart?

(a) We, the U.S. EPA, or a delegated authority such as your state, local, or tribal agency, can implement and enforce this subpart. If our Administrator has delegated authority to your state, local, or tribal agency, then that agency has the authority to implement and enforce this subpart. You should contact the U.S. EPA Regional Office that serves you to find out if this subpart is delegated to your state, local, or tribal agency.

(b) In delegating implementation and enforcement authority of this subpart to a state, local, or tribal agency under 40 CFR part 63, subpart E, the authorities contained in paragraph (c) of this section are retained by our Administrator and are not transferred to the state, local, or tribal agency.

(c) The authorities that will not be delegated to state, local, or tribal agencies are listed in paragraphs (c)(1) through (4) of this section.

(1) Approval of alternatives to the non-opacity emission limitations in § 63.2140 under § 63.6(g).

(2) Approval of major alternatives to test methods under § 63.7(e)(2)(ii) and (f) and as defined in § 63.90.

(3) Approval of major alternatives to monitoring under § 63.8(f) and as defined in § 63.90.

(4) Approval of major alternatives to recordkeeping and reporting under § 63.10(f) and as defined in § 63.90.

§ 63.2192 What definitions apply to this subpart?

Terms used in this subpart are defined in the Clean Air Act, in 40 CFR 63.2, in the General Provisions of this part (§§ 63.1 through 63.15), and in this section as follows:

Batch means a single fermentation cycle in a single fermentation vessel (fermenter).

Batch monitoring period means the period that begins at the later of either the start of aeration or the addition of yeast to the fermenter; the period ends at the earlier of either the end of aeration or the point at which the yeast has begun being emptied from the fermenter.

BAVOC means the average VOC concentration in the fermenter exhaust over the duration of a batch (''batch-average VOC concentration'').

Brew means the mixture of yeast and additives in the fermenter.

Brew ethanol means the ethanol in fermenter liquid.

Brew ethanol monitor means the monitoring system that you use to measure brew ethanol to demonstrate compliance with this subpart. The monitoring system includes a resistance element used as an ethanol sensor, with the measured resistance proportional to the concentration of ethanol in the brew.

Brew-to-exhaust correlation means the correlation between the concentration of ethanol in the brew and the concentration of VOC in the fermenter exhaust. This correlation is specific to each fed-batch fermentation stage and is established while manufacturing the product that comprises the largest percentage (by mass) of average annual production.

Emission limitation means any emission limit or operating limit.

Fed-batch means the yeast is fed carbohydrates and additives during fermentation in the vessel.

Monitoring system malfunction means any sudden, infrequent, and not reasonably preventable failure of the monitoring system to provide valid data. Monitoring system failures that are caused in part by poor maintenance or careless operation are not malfunctions. You are required to complete monitoring system repairs in response to monitoring system malfunctions and to return the monitoring system to operation as expeditiously as practicable.

sfrattini on LAPJZKW1R2 with $$_JOB
VerDate Sep<11>2014 09:16 Apr 04, 2023 Jkt 256165 PO 00000 Frm 00318 Fmt 8010 Sfmt 8010 Q:\40\256165.XXX PC31

1-hour period means any successive period commencing on the minute at which the batch monitoring period begins and continuing for 60 minutes, except for the last period, which may be less than 60 minutes.

Product means the yeast resulting from the final stage in a production run. Products are distinguished by yeast species, strain, and variety.

Responsible official means responsible official as defined in 40 CFR 70.2.

Set-batch means the yeast is fed carbohydrates and additives only at the start of the batch.

Specialty yeast includes, but is not limited to, yeast produced for use in wine, champagne, whiskey, and beer.

Within-concentration batch means a batch for which BAVOC is not higher than the maximum concentration that is allowed as part of the applicable emission limitation.

TABLE 1 TO SUBPART CCCC OF PART 63—EMISSION LIMITATIONS

For each fed-batch fermenter producing yeast in the following fermentation stage . . .	98-percent option: You must not exceed the following VOC emission limitation[a] according to the timeline in Table 7 to this subpart . . .	Average option: You must not exceed the following VOC emission limitation[a] according to the timeline in Table 7 to this subpart . . .	Batch option: You must not exceed the following VOC emission limitation[a] according to the timeline in Table 7 to this subpart . . .
Last stage	100 ppmv (measured as propane) for BAVOC for at least 98 percent of all batches in each 12-month calculation period described in § 63.2171(b) and (e).	95 ppmv (measured as propane) for the average BAVOC of all batches in this stage in each 12-month calculation period described in § 63.2171(c) and (e).	100 ppmv (measured as propane) for BAVOC for each batch.
Second-to-last stage	200 ppmv (measured as propane) for BAVOC for at least 98 percent of all batches in each 12-month calculation period described in § 63.2171(b) and (e).	190 ppmv (measured as propane) for the average BAVOC of all batches in this stage in each 12-month calculation period described in § 63.2171(c) and (e).	200 ppmv (measured as propane) for BAVOC for each batch.
Third-to-last stage	300 ppmv (measured as propane) for BAVOC for at least 98 percent of all batches in each 12-month calculation period described in § 63.2171(b) and (e).	285 ppmv (measured as propane) for the average BAVOC of all batches in this stage in each 12-month calculation period described in § 63.2171(c) and (e).	300 ppmv (measured as propane) for BAVOC for each batch.

[a] The emission limitation does not apply during the production of specialty yeast.

TABLE 2 TO SUBPART CCCC OF PART 63—REQUIREMENTS FOR PERFORMANCE TESTS IF YOU MONITOR BREW ETHANOL

For each fed-batch fermenter for which compliance is determined by monitoring brew ethanol concentration and calculating VOC concentration in the fermenter exhaust according to the procedures in § 63.2161, you must . . .	Using . . .	According to the following requirements . . .
Measure VOC as propane	Method 25A,[a] or an alternative validated by EPA Method 301[b] and approved by the Administrator.	You must measure the VOC concentration in the fermenter exhaust at any point prior to the dilution of the exhaust stream.

[a] EPA Test Method 25A is found in appendix A–7 of 40 CFR part 60.
[b] EPA Test Method 301 is found in appendix A of 40 CFR part 63.

TABLE 3 TO SUBPART CCCC OF PART 63—INITIAL COMPLIANCE WITH EMISSION LIMITATIONS

For . . .	Average option: You have demonstrated initial compliance if . . .	Batch option: You have demonstrated initial compliance if . . .
Each fed-batch fermenter producing yeast in a fermentation stage (last, second-to-last, or third-to-last) for which compliance is determined by monitoring VOC concentration in the fermenter exhaust.	The average BAVOC of all batches in each fermentation stage during the initial compliance period described in § 63.2160(a) does not exceed the applicable concentration in Table 1 to this subpart.	BAVOC for each batch of each fermentation stage during the initial compliance period described in § 63.2160(b) does not exceed the applicable concentration in Table 1 to this subpart.

sfrattini on LAPJZKW1R2 with $$_JOB
VerDate Sep<11>2014 09:16 Apr 04, 2023 Jkt 256165 PO 00000 Frm 00319 Fmt 8010 Sfmt 8026 Q:\40\256165.XXX PC31

TABLE 4 TO SUBPART CCCC OF PART 63—CONTINUOUS COMPLIANCE WITH EMISSION LIMITATIONS

For . . .	98-percent option: You must demonstrate continuous compliance by . . .	Average option: You must demonstrate continuous compliance by . . .	Batch option: You must demonstrate continuous compliance by . . .
1. Each fed-batch fermenter producing yeast in a fermentation stage (last, second-to-last, or third-to-last) for which compliance is determined by monitoring VOC concentration in the fermenter exhaust. 2. Each fed-batch fermenter producing yeast in a fermentation stage (last, second-to-last, or third-to-last) for which compliance is determined by monitoring brew ethanol concentration and calculating VOC concentration in the fermenter exhaust according to the procedures in § 63.2161 [a].	Showing that BAVOC for at least 98 percent of the batches for each 12-month calculation period ending within a semiannual reporting period described in § 63.2181(b)(3) does not exceed the applicable maximum concentration in Table 1 to this subpart.	Showing that the average BAVOC of all batches in each fermentation stage during each 12-month calculation period ending within a semiannual reporting period described in § 63.2181(b)(3) does not exceed the applicable concentration in Table 1 to this subpart.	Showing that BAVOC for each batch within a semiannual reporting period described in § 63.2181(b)(3) does not exceed the applicable concentration in Table 1 to this subpart.

[a] Monitoring brew ethanol concentration to demonstrate compliance is not allowed on and after October 16, 2020, as specified in Table 8 to this subpart.

TABLE 5 TO SUBPART CCCC OF PART 63—REQUIREMENTS FOR REPORTS

You must submit a . . .	The report must contain . . .	You must submit the report . . .
1. Compliance report	a. The information described in § 63.2181(c), as appropriate.	Semiannually according to the requirements in § 63.2181(b).
	b. If you fail to meet an applicable standard during the reporting period, then the compliance report must include the information in § 63.2181(c)(5) or (7).	Semiannually according to the requirements in § 63.2181(b).
2. Performance test report.	The results of the performance test, including the information described in § 63.7(g).	At least once every 365 calendar days and according to the requirements in § 63.2181(a)(1)(i).
3. Performance evaluation report.	The results of the performance evaluation, including information from the performance evaluation plan at § 63.8(e)(3).	At least once every twelve calendar quarters and according to the requirements in §§ 63.2163(f) and 63.2181(a)(1)(ii).

TABLE 6 TO SUBPART CCCC OF PART 63—APPLICABILITY OF GENERAL PROVISIONS TO SUBPART CCCC

Citation	Subject	Applicable to subpart CCCC?
§ 63.1	Applicability	Yes.
§ 63.2	Definitions	Yes.
§ 63.3	Units and Abbreviations	Yes.
§ 63.4	Prohibited Activities and Circumvention.	Yes.
§ 63.5	Construction and Reconstruction	Yes.
§ 63.6	Compliance With Standards and Maintenance Requirements.	1. § 63.6(e)(1)(i) does not apply, instead specified in § 63.2150(d). 2. § 63.6(e)(1)(ii), (e)(3), (f)(1), and (h) do not apply. 3. Otherwise, all apply.
§ 63.7	Performance Testing Requirements.	1. § 63.7(a)(1) and (2) do not apply, instead specified in § 63.2162. 2. § 63.7(e)(1) and (e)(3) do not apply, instead specified in § 63.2161(b). 3. Otherwise, all apply.
§ 63.8	Monitoring Requirements	1. § 63.8(a)(2) is modified by § 63.2163. 2. § 63.8(d)(3) is modified by § 63.2182(c)(3) and § 63.2183(e). 3. § 63.8(a)(4), (c)(1)(i), (c)(1)(iii), (c)(4)(i), (c)(5), (e)(5)(ii), and (g)(5) do not apply. 4. § 63.8(c)(6), (c)(8), (e)(4), (g)(1), and (g)(3) do not apply, instead specified in §§ 63.2163(b) and (j), 63.2164(c), and 63.2182(c)(1) and (5). 5. Otherwise, all apply.

sfrattini on LAPJZKW1R2 with $$_JOB
VerDate Sep<11>2014 09:16 Apr 04, 2023 Jkt 256165 PO 00000 Frm 00320 Fmt 8010 Sfmt 8026 Q:\40\256165.XXX PC31

Citation	Subject	Applicable to subpart CCCC?
§ 63.9	Notification Requirements	1. § 63.9(b)(2) does not apply because rule omits requirements for initial notification for affected sources that start up prior to May 21, 2001. 2. § 63.9(f) does not apply. 3. Otherwise, all apply.
§ 63.10	Recordkeeping and Reporting Requirements.	1. § 63.10(b)(2)(ii) does not apply, instead specified in § 63.2182(a)(2) and (c)(5). 2. § 63.10(b)(2)(i), (b)(2)(iv), (b)(2)(v), (c)(15), (d)(3), (e)(2)(ii), and (e)(3) and (4) do not apply. 3. § 63.10(d)(5) does not apply, instead specified in § 63.2181(c)(5) and (7). 4. Otherwise, all apply.
§ 63.11	Flares	No.
§ 63.12	Delegation	Yes.
§ 63.13	Addresses	Yes.
§ 63.14	Incorporation by Reference	Yes.
§ 63.15	Availability of Information	Yes.

TABLE 7 TO SUBPART CCCC OF PART 63—EMISSION LIMITATION APPLICABILITY TIMELINE

For each . . .	During this time frame . . .	You must comply with the emission limitations in Table 1 to this subpart using the . . .
Existing affected source	Before 10/16/2017	98-Percent Option.
	Between 10/16/2017 and October 16, 2018.	98-Percent Option, Average Option, or Batch Option.
	On and after October 16, 2018	Average Option or Batch Option.
New or reconstructed affected source that you start up prior to 10/16/2017.	Before 10/16/2017	98-Percent Option.
	Between 10/16/2017 and October 16, 2018.	98-Percent Option, Average Option, or Batch Option.
	On and after October 16, 2018	Average Option or Batch Option.
New or reconstructed affected source that you start up after 10/16/2017.	After 10/16/2017	Average Option or Batch Option.

TABLE 8 TO SUBPART CCCC OF PART 63—MONITORING SYSTEM REQUIREMENTS TIMELINE

For each . . .	During this time frame . . .	You must monitor VOC concentration by . . .
Existing affected source	Before 10/16/2017	Monitoring fermenter exhaust using a CEMS or by monitoring brew ethanol concentration using a brew ethanol monitor.
	Between 10/16/2017 and October 16, 2020.	Monitoring fermenter exhaust using a VOC CEMS or by monitoring brew ethanol concentration using a brew ethanol monitor.
	On and after October 16, 2020	Monitoring fermenter exhaust using a VOC CEMS.
New or reconstructed affected source that you start up prior to 10/16/2017.	Before 10/16/2017	Monitoring fermenter exhaust using a CEMS or by monitoring brew ethanol concentration using a brew ethanol monitor.
	Between 10/16/2017 and October 16, 2020.	Monitoring fermenter exhaust using a VOC CEMS or by monitoring brew ethanol concentration using a brew ethanol monitor.
	On and after October 16, 2020	Monitoring fermenter exhaust using a VOC CEMS.
New or reconstructed affected source that you start up after 10/16/2017.	After 10/16/2017	Monitoring fermenter exhaust using a VOC CEMS.

sfrattini on LAPJZKW1R2 with $$_JOB
VerDate Sep<11>2014 09:16 Apr 04, 2023 Jkt 256165 PO 00000 Frm 00321 Fmt 8010 Sfmt 8002 Q:\40\256165.XXX PC31

Subpart DDDD—National Emission Standards for Hazardous Air Pollutants: Plywood and Composite Wood Products

SOURCE: 69 FR 46011, July 30, 2004, unless otherwise noted.

WHAT THIS SUBPART COVERS

§ 63.2230 What is the purpose of this subpart?

This subpart establishes national compliance options, operating requirements, and work practice requirements for hazardous air pollutants (HAP) emitted from plywood and composite wood products (PCWP) manufacturing facilities. This subpart also establishes requirements to demonstrate initial and continuous compliance with the compliance options, operating requirements, and work practice requirements.

§ 63.2231 Does this subpart apply to me?

This subpart applies to you if you meet the criteria in paragraphs (a) and (b) of this section.

(a) You own or operate a PCWP manufacturing facility. A PCWP manufacturing facility is a facility that manufactures plywood and/or composite wood products by bonding wood material (fibers, particles, strands, veneers, etc.) or agricultural fiber, generally with resin under heat and pressure, to form a structural panel or engineered wood product. Plywood and composite wood products manufacturing facilities also include facilities that manufacture dry veneer and lumber kilns located at any facility. Plywood and composite wood products include, but are not limited to, plywood, veneer, particleboard, oriented strandboard, hardboard, fiberboard, medium density fiberboard, laminated strand lumber, laminated veneer lumber, wood I-joists, kiln-dried lumber, and glue-laminated beams.

(b) The PCWP manufacturing facility is located at a major source of HAP emissions. A major source of HAP emissions is any stationary source or group of stationary sources within a contiguous area and under common control that emits or has the potential to emit any single HAP at a rate of 9.07 megagrams (10 tons) or more per year or any combination of HAP at a rate of 22.68 megagrams (25 tons) or more per year.

[69 FR 46011, July 30, 2004, as amended at 72 FR 61062, Oct. 29, 2007]

§ 63.2232 What parts of my plant does this subpart cover?

(a) This subpart applies to each new, reconstructed, or existing affected source at a PCWP manufacturing facility.

(b) The affected source is the collection of dryers, refiners, blenders, formers, presses, board coolers, and other process units associated with the manufacturing of plywood and composite wood products. The affected source includes, but is not limited to, green end operations, refining, drying operations (including any combustion unit exhaust stream routinely used to direct fire process unit(s)), resin preparation, blending and forming operations, pressing and board cooling operations, and miscellaneous finishing operations (such as sanding, sawing, patching, edge sealing, and other finishing operations not subject to other national emission standards for hazardous air pollutants (NESHAP)). The affected source also includes onsite storage and preparation of raw materials used in the manufacture of plywood and/or composite wood products, such as resins; onsite wastewater treatment operations specifically associated with plywood and composite wood products manufacturing; and miscellaneous coating operations (§ 63.2292). The affected source includes lumber kilns at PCWP manufacturing facilities and at any other kind of facility.

(c) An affected source is a new affected source if you commenced construction of the affected source after January 9, 2003, and you meet the applicability criteria at the time you commenced construction.

(d) An affected source is reconstructed if you meet the criteria as defined in § 63.2.

(e) An affected source is existing if it is not new or reconstructed.

[69 FR 46011, July 30, 2004, as amended at 71 FR 8371, Feb. 16, 2006]

sfrattini on LAPJZKW1R2 with $$_JOB
VerDate Sep<11>2014 09:16 Apr 04, 2023 Jkt 256165 PO 00000 Frm 00322 Fmt 8010 Sfmt 8010 Q:\40\256165.XXX PC31

§ 63.2233 When do I have to comply with this subpart?

(a) If you have a new or reconstructed affected source, you must comply with this subpart according to paragraph (a)(1) or (2) of this section, whichever is applicable.

(1) If the initial startup of your affected source is before September 28, 2004, then you must comply with the compliance options, operating requirements, and work practice requirements for new and reconstructed sources in this subpart no later than September 28, 2004, except as otherwise specified in §§ 63.2250, 63.2280(b) and (d), 63.2281(b)(6), and 63.2282(a)(2) and Tables 3, 6, 7, 8, 9, and 10 to this subpart.

(2) If the initial startup of your affected source is after September 28, 2004, then you must comply with the compliance options, operating requirements, and work practice requirements for new and reconstructed sources in this subpart upon initial startup of your affected source, except as otherwise specified in §§ 63.2250, 63.2280(b) and (d), 63.2281(b)(6), and 63.2282(a)(2) and Tables 3, 6, 7, 8, 9, and 10 to this subpart.

(b) If you have an existing affected source, you must comply with the compliance options, operating requirements, and work practice requirements for existing sources no later than October 1, 2007, except as otherwise specified in §§ 63.2240(c)(2)(vi)(A), 63.2250, 63.2280(b) and (d), 63.2281(b)(6) and (c)(4), and 63.2282(a)(2) and Tables 3, 6, 7, 8, 9, and 10 to this subpart.

(c) If you have an area source that increases its emissions or its potential to emit such that it becomes a major source of HAP, you must be in compliance with this subpart by October 1, 2007 or upon initial startup of your affected source as a major source, whichever is later.

(d) You must meet the notification requirements according to the schedule in § 63.2280 and according to 40 CFR part 63, subpart A. Some of the notifications must be submitted before you are required to comply with the compliance options, operating requirements, and work practice requirements in this subpart.

[69 FR 46011, July 30, 2004, as amended at 71 FR 8372, Feb. 16, 2006; 72 FR 61062, Oct. 29, 2007; 85 FR 49455, Aug. 13, 2020]

COMPLIANCE OPTIONS, OPERATING REQUIREMENTS, AND WORK PRACTICE REQUIREMENTS

§ 63.2240 What are the compliance options and operating requirements and how must I meet them?

You must meet the compliance options and operating requirements described in Tables 1A, 1B, and 2 to this subpart and in paragraph (c) of this section by using one or more of the compliance options listed in paragraphs (a), (b), and (c) of this section. The process units subject to the compliance options are listed in Tables 1A and 1B to this subpart and are defined in § 63.2292. You need only to meet one of the compliance options outlined in paragraphs (a) through (c) of this section for each process unit. You cannot combine compliance options in paragraph (a), (b), or (c) for a single process unit. (For example, you cannot use a production-based compliance option in paragraph (a) for one vent of a veneer dryer and an add-on control system compliance option in paragraph (b) for another vent on the same veneer dryer. You must use either the production-based compliance option or an add-on control system compliance option for the entire dryer.)

(a) *Production-based compliance options.* You must meet the production-based total HAP compliance options in Table 1A to this subpart and the applicable operating requirements in Table 2 to this subpart. You may not use an add-on control system or wet control device to meet the production-based compliance options.

(b) *Compliance options for add-on control systems.* You must use an emissions control system and demonstrate that the resulting emissions meet the compliance options and operating requirements in Tables 1B and 2 to this subpart. If you own or operate a reconstituted wood product press at a new or existing affected source or a reconstituted wood product board cooler at a new affected source, and you choose to

sfrattini on LAPJZKW1R2 with $$_JOB
VerDate Sep<11>2014 09:16 Apr 04, 2023 Jkt 256165 PO 00000 Frm 00323 Fmt 8010 Sfmt 8010 Q:\40\256165.XXX PC31

comply with one of the concentration-based compliance options for a control system outlet (presented as option numbers 2, 4, and 6 in Table 1B to this subpart), you must have a capture device that either meets the definition of wood products enclosure in § 63.2292 or achieves a capture efficiency of greater than or equal to 95 percent.

(c) *Emissions averaging compliance option (for existing sources only)*. Using the procedures in paragraphs (c)(1) through (3) of this section, you must demonstrate that emissions included in the emissions average meet the compliance options and operating requirements. New sources may not use emissions averaging to comply with this subpart.

(1) *Calculation of required and actual mass removal*. Limit emissions of total HAP, as defined in § 63.2292, to include acetaldehyde, acrolein, formaldehyde, methanol, phenol, and propionaldehyde from your affected source to the standard specified by Equations 1, 2, and 3 of this section.

$$\mathrm{RMR} = 0.90 \times \left(\sum_{i=1}^{n} \mathrm{UCEP_i} \times \mathrm{OH_i} \right) \quad \text{(Eq. 1)}$$

$$\mathrm{AMR} = \left(\sum_{i=1}^{n} \mathrm{CD_i} \times \mathrm{OCEP_i} \times \mathrm{OH_i} \right) \quad \text{(Eq. 2)}$$

$$\mathrm{AMR} \geq \mathrm{RMR} \quad \text{(Eq. 3)}$$

Where:

RMR = required mass removal of total HAP from all process units generating debits (*i.e.*, all process units that are subject to the compliance options in Tables 1A and 1B to this subpart and that are either uncontrolled or under-controlled), pounds per semiannual period;

AMR = actual mass removal of total HAP from all process units generating credits (*i.e.*, all process units that are controlled as part of the Emissions Averaging Plan including credits from debit-generating process units that are under-controlled), pounds per semiannual period;

$UCEP_i$ = mass of total HAP from an uncontrolled or under-controlled process unit (i) that generates debits, pounds per hour;

OH_i = number of hours a process unit (i) is operated during the semiannual period, hours per 6-month period;

CD_i = control system efficiency for the emission point (i) for total HAP, expressed as a fraction, and not to exceed 90 percent, unitless (Note: To calculate the control system efficiency of biological treatment units that do not meet the definition of biofilter in § 63.2292, you must use 40 CFR part 63, appendix C, Determination of the Fraction Biodegraded (F_{bio}) in a Biological Treatment Unit.);

$OCEP_i$ = mass of total HAP from a process unit (i) that generates credits (including credits from debit-generating process units that are under-controlled), pounds per hour;

0.90 = required control system efficiency of 90 percent multiplied, unitless.

(2) *Requirements for debits and credits*. You must calculate debits and credits as specified in paragraphs (c)(2)(i) through (vi) of this section.

(i) You must limit process units in the emissions average to those process units located at the existing affected source as defined in § 63.2292.

(ii) You cannot use nonoperating process units to generate emissions averaging credits. You cannot use process units that are shut down to generate emissions averaging debits or credits.

(iii) You may not include in your emissions average process units controlled to comply with a State, Tribal, or Federal rule other than this subpart.

(iv) You must use actual measurements of total HAP emissions from process units to calculate your required mass removal (RMR) and actual mass removal (AMR). The total HAP measurements must be obtained according to § 63.2262(b) through (d), (g), and (h), using the methods specified in Table 4 to this subpart.

(v) Your initial demonstration that the credit-generating process units will be capable of generating enough credits to offset the debits from the debit-generating process units must be made under representative operating conditions. After the compliance date, you must use actual operating data for all debit and credit calculations.

(vi) Do not include emissions from the following time periods in your emissions averaging calculations:

(A) Before August 13, 2021, emissions during periods of startup, shutdown, and malfunction as described in the startup, shutdown, and malfunction plan (SSMP). On and after August 13, 2021, emissions during safety-related shutdowns, pressurized refiner startups

sfrattini on LAPJZKW1R2 with $$_JOB
VerDate Sep<11>2014 09:16 Apr 04, 2023 Jkt 256165 PO 00000 Frm 00324 Fmt 8010 Sfmt 8010 Q:\40\256165.XXX PC31
ER72AD04.000</MATH> ER72AD04.001</MATH> ER72AD04.002</MATH>

and shutdowns, or startup and shutdown of direct-fired softwood veneer dryer gas-fired burners.

(B) Emissions during periods of monitoring malfunctions, associated repairs, and required quality assurance or control activities or during periods of control device maintenance covered in your routine control device maintenance exemption. No credits may be assigned to credit-generating process units, and maximum debits must be assigned to debit-generating process units during these periods.

(3) *Operating requirements.* You must meet the operating requirements in Table 2 to this subpart for each process unit or control device used in calculation of emissions averaging credits.

[69 FR 46011, July 30, 2004, as amended at 85 FR 49455, Aug. 13, 2020]

§ 63.2241 What are the work practice requirements and how must I meet them?

(a) You must meet each work practice requirement in Table 3 to this subpart that applies to you.

(b) As provided in § 63.6(g), we, the EPA, may choose to grant you permission to use an alternative to the work practice requirements in this section.

(c) If you have a dry rotary dryer, you may choose to designate your dry rotary dryer as a green rotary dryer and meet the more stringent compliance options and operating requirements in § 63.2240 for green rotary dryers instead of the work practices for dry rotary dryers. If you have a hardwood veneer dryer or veneer redryer, you may choose to designate your hardwood veneer dryer or veneer redryer as a softwood veneer dryer and meet the more stringent compliance options and operating requirements in § 63.2240 for softwood veneer dryer heated zones instead of the work practices for hardwood veneer dryers or veneer redryers.

GENERAL COMPLIANCE REQUIREMENTS

§ 63.2250 What are the general requirements?

(a) You must be in compliance with the compliance options, operating requirements, and the work practice requirements in this subpart at all times, except during periods of process unit or control device startup, shutdown, and malfunction; prior to process unit initial startup; and during the routine control device maintenance exemption specified in § 63.2251. The compliance options, operating requirements, and work practice requirements do not apply during times when the process unit(s) subject to the compliance options, operating requirements, and work practice requirements are not operating, or during periods of startup, shutdown, and malfunction. Startup and shutdown periods must not exceed the minimum amount of time necessary for these events. For any affected source that commences construction or reconstruction after September 6, 2019, this paragraph (a) does not apply on and after August 13, 2020 or initial startup of the affected source, whichever is later. For all other affected sources, this paragraph (a) does not apply on and after August 13, 2021.

(b) You must always operate and maintain your affected source, including air pollution control and monitoring equipment according to the provisions in § 63.6(e)(1)(i). For any affected source that commences construction or reconstruction after September 6, 2019, this paragraph (b) does not apply on and after August 13, 2020 or initial startup of the affected source, whichever is later. For all other affected sources, this paragraph (b) does not apply on and after August 13, 2021.

(c) You must develop a written SSMP according to the provisions in § 63.6(e)(3). For any affected source that commences construction or reconstruction after September 6, 2019, this paragraph (c) does not apply on and after August 13, 2020 or initial startup of the affected source, whichever is later. For all other affected sources, this paragraph (c) does not apply on and after August 13, 2021.

(d) Shutoff of direct-fired burners resulting from partial and full production stoppages of direct-fired softwood veneer dryers or over-temperature events shall be deemed shutdowns and not malfunctions. Lighting or re-lighting any one or all gas burners in direct-

sfrattini on LAPJZKW1R2 with $$_JOB
VerDate Sep<11>2014 09:16 Apr 04, 2023 Jkt 256165 PO 00000 Frm 00325 Fmt 8010 Sfmt 8010 Q:\40\256165.XXX PC31

fired softwood veneer dryers shall be deemed startups and not malfunctions.

(e) You must be in compliance with the provisions of subpart A of this part, except as noted in Table 10 to this subpart.

(f) Upon August 13, 2020 or initial startup of the affected source, whichever is later, for affected sources that commenced construction or reconstruction after September 6, 2019, and on and after August 13, 2021 for all other affected sources, you must be in compliance with the compliance options, operating requirements, and the work practice requirements in this subpart when the process unit(s) subject to the compliance options, operating requirements, and work practice requirements are operating, except as specified in paragraphs (f)(1) through (6) of this section.

(1) Prior to process unit initial startup.

(2) During safety-related shutdowns conducted according to the work practice requirement in Table 3 to this subpart.

(3) During pressurized refiner startup and shutdown according to the work practice requirement in Table 3 to this subpart.

(4) During startup and shutdown of direct-fired softwood veneer dryer gas-fired burners according to the work practice requirement in Table 3 to this subpart.

(5) You must minimize the length of time when compliance options and operating requirements in this subpart are not met due to the conditions in paragraphs (f)(2) and (4) of this section.

(6) The applicable standard during each of the operating conditions specified in paragraphs (f)(2) through (4) of this section are the work practice requirements in Table 3 to this subpart for safety-related shutdowns (row 6), pressurized refiner startup and shutdown (row 7), and direct-fired softwood veneer dryers undergoing startup or shutdown of gas-fired burners (row 8). The otherwise applicable compliance options, operating requirements, and work practice requirements (in rows 1 through 5 of Table 3 to this subpart) do not apply during the operating conditions specified in paragraphs (f)(2) through (4) of this section.

(g) For affected sources that commenced construction or reconstruction after September 6, 2019, and for all other affected sources on and after August 13, 2021, you must always operate and maintain your affected source, including air pollution control and monitoring equipment in a manner consistent with good air pollution control practices for minimizing emissions at least to the levels required by this subpart. The general duty to minimize emissions does not require you to make any further efforts to reduce emissions if levels required by the applicable standard have been achieved. Determination of whether a source is operating in compliance with operation and maintenance requirements will be based on information available to the Administrator which may include, but is not limited to, monitoring results, review of operation and maintenance procedures, review of operation and maintenance records, and inspection of the source.

[69 FR 46011, July 30, 2004, as amended at 71 FR 8372, Feb. 16, 2006; 71 FR 20463, Apr. 20, 2006; 85 FR 49455, Aug. 13, 2020]

§ 63.2251 What are the requirements for the routine control device maintenance exemption?

(a) You may request a routine control device maintenance exemption from the EPA Administrator for routine maintenance events such as control device bakeouts, washouts, media replacement, and replacement of corroded parts. Your request must justify the need for the routine maintenance on the control device and the time required to accomplish the maintenance activities, describe the maintenance activities and the frequency of the maintenance activities, explain why the maintenance cannot be accomplished during process shutdowns, describe how you plan to make reasonable efforts to minimize emissions during the maintenance, and provide any other documentation required by the EPA Administrator.

(b) The routine control device maintenance exemption must not exceed the percentages of process unit operating uptime in paragraphs (b)(1) and (2) of this section.

sfrattini on LAPJZKW1R2 with $$_JOB
VerDate Sep<11>2014 09:16 Apr 04, 2023 Jkt 256165 PO 00000 Frm 00326 Fmt 8010 Sfmt 8010 Q:\40\256165.XXX PC31

(1) If the control device is used to control a green rotary dryer, tube dryer, rotary strand dryer, or pressurized refiner, then the routine control device maintenance exemption must not exceed 3 percent of annual operating uptime for each process unit controlled.

(2) If the control device is used to control a softwood veneer dryer, reconstituted wood product press, reconstituted wood product board cooler, hardboard oven, press predryer, conveyor strand dryer, or fiberboard mat dryer, then the routine control device maintenance exemption must not exceed 0.5 percent of annual operating uptime for each process unit controlled.

(3) If the control device is used to control a combination of equipment listed in both paragraphs (b)(1) and (2) of this section, such as a tube dryer and a reconstituted wood product press, then the routine control device maintenance exemption must not exceed 3 percent of annual operating uptime for each process unit controlled.

(c) The request for the routine control device maintenance exemption, if approved by the EPA Administrator, must be IBR in and attached to the affected source's title V permit.

(d) The compliance options and operating requirements do not apply during times when control device maintenance covered under your approved routine control device maintenance exemption is performed. You must minimize emissions to the greatest extent possible during these routine control device maintenance periods.

(e) To the extent practical, startup and shutdown of emission control systems must be scheduled during times when process equipment is also shut down.

§ 63.2252 What are the requirements for process units that have no control or work practice requirements?

For process units not subject to the compliance options or work practice requirements specified in § 63.2240 (including, but not limited to, lumber kilns), you are not required to comply with the compliance options, work practice requirements, performance testing, monitoring, and recordkeeping or reporting requirements of this subpart, or any other requirements in subpart A of this part, except for the initial notification requirements in § 63.9(b).

[85 FR 49455, Aug. 13, 2020]

INITIAL COMPLIANCE REQUIREMENTS

§ 63.2260 How do I demonstrate initial compliance with the compliance options, operating requirements, and work practice requirements?

(a) To demonstrate initial compliance with the compliance options and operating requirements, you must conduct performance tests and establish each site-specific operating requirement in Table 2 to this subpart according to the requirements in § 63.2262 and Table 4 to this subpart. Combustion units that accept process exhausts into the flame zone are exempt from the initial performance testing and operating requirements for thermal oxidizers.

(b) You must demonstrate initial compliance with each compliance option, operating requirement, and work practice requirement that applies to you according to Tables 5 and 6 to this subpart and according to §§ 63.2260 through 63.2269 of this subpart.

(c) You must submit the Notification of Compliance Status containing the results of the initial compliance demonstration according to the requirements in § 63.2280(d).

§ 63.2261 By what date must I conduct performance tests or other initial compliance demonstrations?

(a) You must conduct performance tests upon initial startup or no later than 180 calendar days after the compliance date that is specified for your source in § 63.2233 and according to § 63.7(a)(2), whichever is later.

(b) You must conduct initial compliance demonstrations that do not require performance tests upon initial startup or no later than 30 calendar days after the compliance date that is specified for your source in § 63.2233, whichever is later.

sfrattini on LAPJZKW1R2 with $$_JOB
VerDate Sep<11>2014 09:16 Apr 04, 2023 Jkt 256165 PO 00000 Frm 00327 Fmt 8010 Sfmt 8010 Q:\40\256165.XXX PC31

§ 63.2262 How do I conduct performance tests and establish operating requirements?

(a) *Testing procedures.* You must conduct each performance test according to the requirements in paragraphs (b) through (o) of this section and according to the methods specified in Table 4 to this subpart.

(b) *Periods when performance tests must be conducted.* You must conduct each performance test based on representative performance (*i.e.*, performance based on representative operating conditions as defined in § 63.2292) of the affected source for the period being tested. Representative conditions exclude periods of startup and shutdown. You may not conduct performance tests during periods of malfunction. You must describe representative operating conditions in your performance test report for the process and control systems and explain why they are representative. You must record the process information that is necessary to document operating conditions during the test and include in such record an explanation to support that such conditions are representative. Upon request, you shall make available to the Administrator such records as may be necessary to determine the conditions of performance tests.

(c) *Number of test runs.* You must conduct three separate test runs for each performance test required in this section as specified in § 63.7(e)(3). Each test run must last at least 1 hour except for: testing of a temporary total enclosure (TTE) conducted using Methods 204A through 204F of 40 CFR part 51, appendix M, which require three separate test runs of at least 3 hours each; and testing of an enclosure conducted using the alternative tracer gas method in appendix A to this subpart, which requires a minimum of three separate runs of at least 20 minutes each.

(d) *Location of sampling sites.* (1) Sampling sites must be located at the inlet (if emission reduction testing or documentation of inlet methanol or formaldehyde concentration is required) and outlet of the control device (defined in § 63.2292) and prior to any releases to the atmosphere. For control sequences with wet control devices (defined in § 63.2292) followed by control devices (defined in § 63.2292), sampling sites may be located at the inlet and outlet of the control sequence and prior to any releases to the atmosphere.

(2) Sampling sites for process units meeting compliance options without a control device must be located prior to any releases to the atmosphere. Facilities demonstrating compliance with a production-based compliance option for a process unit equipped with a wet control device must locate sampling sites prior to the wet control device.

(e) *Collection of monitoring data.* You must collect operating parameter monitoring system or continuous emissions monitoring system (CEMS) data at least every 15 minutes during the entire performance test and determine the parameter or concentration value for the operating requirement during the performance test using the methods specified in paragraphs (k) through (o) of this section.

(f) *Collection of production data.* To comply with any of the production-based compliance options, you must measure and record the process unit throughput during each performance test.

(g) *Nondetect data.* (1) Except as specified in paragraph (g)(2) of this section, all nondetect data (§ 63.2292) must be treated as one-half of the method detection limit when determining total HAP, formaldehyde, methanol, or total hydrocarbon (THC) emission rates.

(2) When showing compliance with the production-based compliance options in Table 1A to this subpart, you may treat emissions of an individual HAP as zero if all three of the performance test runs result in a nondetect measurement, and the method detection limit is less than or equal to 1 parts per million by volume, dry basis (ppmvd). Otherwise, nondetect data for individual HAP must be treated as one-half of the method detection limit.

(h) *Calculation of percent reduction across a control system.* When determining the control system efficiency for any control system included in your emissions averaging plan (not to exceed 90 percent) and when complying with any of the compliance options based on percent reduction across a

sfrattini on LAPJZKW1R2 with $$_JOB
VerDate Sep<11>2014 09:16 Apr 04, 2023 Jkt 256165 PO 00000 Frm 00328 Fmt 8010 Sfmt 8010 Q:\40\256165.XXX PC31

control system in Table 1B to this subpart, as part of the performance test, you must calculate the percent reduction using Equation 1 of this section:

$$PR = CE \times \frac{ER_{in} - ER_{out}}{ER_{in}}(100) \qquad \text{(Eq. 1)}$$

Where:

PR = percent reduction, percent;

CE = capture efficiency, percent (determined for reconstituted wood product presses and board coolers as required in Table 4 to this subpart);

ER_{in} = emission rate of total HAP (calculated as the sum of the emission rates of acetaldehyde, acrolein, formaldehyde, methanol, phenol, and propionaldehyde), THC, formaldehyde, or methanol in the inlet vent stream of the control device, pounds per hour;

ER_{out} = emission rate of total HAP (calculated as the sum of the emission rates of acetaldehyde, acrolein, formaldehyde, methanol, phenol, and propionaldehyde), THC, formaldehyde, or methanol in the outlet vent stream of the control device, pounds per hour.

(i) *Calculation of mass per unit production.* To comply with any of the production-based compliance options in Table 1A to this subpart, you must calculate your mass per unit production emissions for each performance test run using Equation 2 of this section:

$$MP = \frac{ER_{HAP}}{P \times CE} \qquad \text{(Eq. 2)}$$

Where:

MP = mass per unit production, pounds per oven dried ton OR pounds per thousand square feet on a specified thickness basis (see paragraph (j) of this section if you need to convert from one thickness basis to another);

ER_{HAP} = emission rate of total HAP (calculated as the sum of the emission rates of acetaldehyde, acrolein, formaldehyde, methanol, phenol, and propionaldehyde) in the stack, pounds per hour;

P = process unit production rate (throughput), oven dried tons per hour OR thousand square feet per hour on a specified thickness basis;

CE = capture efficiency, percent (determined for reconstituted wood product presses and board coolers as required in Table 4 to this subpart).

(j) *Thickness basis conversion.* Use Equation 3 of this section to convert from one thickness basis to another:

$$MSF_B = MSF_A \times \frac{A}{B} \qquad \text{(Eq. 3)}$$

Where:

MSF_A = thousand square feet on an A-inch basis;

MSF_B = thousand square feet on a B-inch basis;

A = old thickness you are converting from, inches;

B = new thickness you are converting to, inches.

(k) *Establishing thermal oxidizer operating requirements.* If you operate a thermal oxidizer, you must establish your thermal oxidizer operating parameters according to paragraphs (k)(1) through (3) of this section.

(1) During the performance test, you must continuously monitor the firebox temperature during each of the required 1-hour test runs. For regenerative thermal oxidizers, you may measure the temperature in multiple locations (*e.g.*, one location per burner) in the combustion chamber and calculate the average of the temperature measurements prior to reducing the temperature data to 15-minute averages for purposes of establishing your minimum firebox temperature. The minimum firebox temperature must then be established as the average of the three minimum 15-minute firebox temperatures monitored during the three test runs. Multiple three-run performance tests may be conducted to establish a range of parameter values under different operating conditions.

(2) You may establish a different minimum firebox temperature for your thermal oxidizer by submitting the notification specified in §63.2280(g) and conducting a repeat performance test as specified in paragraph (k)(1) of this section that demonstrates compliance with the applicable compliance options of this subpart.

(3) If your thermal oxidizer is a combustion unit that accepts process exhaust into the flame zone, then you are exempt from the performance testing and monitoring requirements specified in paragraphs (k)(1) and (2) of this section. To demonstrate initial compliance, you must submit documentation with your Notification of Compliance Status showing that process exhausts

sfrattini on LAPJZKW1R2 with $$_JOB
VerDate Sep<11>2014 09:16 Apr 04, 2023 Jkt 256165 PO 00000 Frm 00329 Fmt 8010 Sfmt 8010 Q:\40\256165.XXX PC31
ER72AD04.003</MATH> ER72AD04.004</MATH> ER72AD04.005</MATH>

controlled by the combustion unit enter into the flame zone.

(l) *Establishing catalytic oxidizer operating requirements.* If you operate a catalytic oxidizer, you must establish your catalytic oxidizer operating parameters according to paragraphs (l)(1) and (2) of this section.

(1) During the performance test, you must continuously monitor during the required 1-hour test runs either the temperature at the inlet to each catalyst bed or the temperature in the combustion chamber. For regenerative catalytic oxidizers, you must calculate the average of the temperature measurements from each catalyst bed inlet or within the combustion chamber prior to reducing the temperature data to 15-minute averages for purposes of establishing your minimum catalytic oxidizer temperature. The minimum catalytic oxidizer temperature must then be established as the average of the three minimum 15-minute temperatures monitored during the three test runs. Multiple three-run performance tests may be conducted to establish a range of parameter values under different operating conditions.

(2) You may establish a different minimum catalytic oxidizer temperature by submitting the notification specified in § 63.2280(g) and conducting a repeat performance test as specified in paragraphs (l)(1) and (2) of this section that demonstrates compliance with the applicable compliance options of this subpart.

(m) *Establishing biofilter operating requirements.* If you operate a biofilter, you must establish your biofilter operating requirements according to paragraphs (m)(1) through (3) of this section.

(1) During the performance test, you must continuously monitor the biofilter bed temperature during each of the required 1-hour test runs. To monitor biofilter bed temperature, you may use multiple thermocouples in representative locations throughout the biofilter bed and calculate the average biofilter bed temperature across these thermocouples prior to reducing the temperature data to 15-minute averages for purposes of establishing biofilter bed temperature limits. The biofilter bed temperature range must be established as the temperature values 10 percent below the minimum and 10 percent (not to exceed 8 °F) above the maximum 15-minute biofilter bed temperatures monitored during the three test runs. You may base your biofilter bed temperature range on values recorded during previous performance tests provided that the data used to establish the temperature ranges have been obtained using the test methods required in this subpart. If you use data from previous performance tests, you must certify that the biofilter and associated process unit(s) have not been modified subsequent to the date of the performance tests. Replacement of the biofilter media with the same type of material is not considered a modification of the biofilter for purposes of this section.

(2) For a new biofilter installation, you will be allowed up to 180 days following the compliance date or 180 days following initial startup of the biofilter to complete the requirements in paragraph (m)(1) of this section.

(3) You may expand your biofilter bed temperature operating range by submitting the notification specified in § 63.2280(g) and conducting a repeat performance test as specified in paragraph (m)(1) of this section that demonstrates compliance with the applicable compliance options of this subpart.

(n) *Establishing operating requirements for process units meeting compliance options without a control device.* If you operate a process unit that meets a compliance option in Table 1A to this subpart, or is a process unit that generates debits in an emissions average without the use of a control device, you must establish your process unit operating parameters according to paragraphs (n)(1) through (2) of this section.

(1) During the performance test, you must identify and document the process unit controlling parameter(s) that affect total HAP emissions during the three-run performance test. The controlling parameters you identify must coincide with the representative operating conditions you describe according to paragraph (b) of this section. For each parameter, you must specify appropriate monitoring methods, monitoring frequencies, and for continuously monitored parameters, averaging

sfrattini on LAPJZKW1R2 with $$_JOB
VerDate Sep<11>2014 09:16 Apr 04, 2023 Jkt 256165 PO 00000 Frm 00330 Fmt 8010 Sfmt 8010 Q:\40\256165.XXX PC31

times not to exceed 24 hours. The operating limit for each controlling parameter must then be established as the minimum, maximum, range, or average (as appropriate depending on the parameter) recorded during the performance test. Multiple three-run performance tests may be conducted to establish a range of parameter values under different operating conditions.

(2) You may establish different controlling parameter limits for your process unit by submitting the notification specified in § 63.2280(g) and conducting a repeat performance test as specified in paragraph (n)(1) of this section that demonstrates compliance with the compliance options in Table 1A to this subpart or is used to establish emission averaging debits for an uncontrolled process unit.

(o) *Establishing operating requirements using THC CEMS.* If you choose to meet the operating requirements by monitoring THC concentration instead of monitoring control device or process operating parameters, you must establish your THC concentration operating requirement according to paragraphs (o)(1) through (2) of this section.

(1) During the performance test, you must continuously monitor THC concentration using your CEMS during each of the required 1-hour test runs. The maximum THC concentration must then be established as the average of the three maximum 15-minute THC concentrations monitored during the three test runs. Multiple three-run performance tests may be conducted to establish a range of THC concentration values under different operating conditions.

(2) You may establish a different maximum THC concentration by submitting the notification specified in § 63.2280(g) and conducting a repeat performance test as specified in paragraph (o)(1) of this section that demonstrates compliance with the compliance options in Tables 1A and 1B to this subpart.

[69 FR 46011, July 30, 2004, as amended at 71 FR 8372, Feb. 16, 2006; 85 FR 49456, Aug. 13, 2020]

§ 63.2263 Initial compliance demonstration for a dry rotary dryer.

If you operate a dry rotary dryer, you must demonstrate that your dryer processes furnish with an inlet moisture content of less than or equal to 30 percent (by weight, dry basis) and operates with a dryer inlet temperature of less than or equal to 600 °F. You must designate and clearly identify each dry rotary dryer. You must record the inlet furnish moisture content (dry basis) and inlet dryer operating temperature according to §§ 63.2269(a), (b), and (c) and 63.2270 for a minimum of 30 calendar days. You must submit the highest recorded 24-hour average inlet furnish moisture content and the highest recorded 24-hour average dryer inlet temperature with your Notification of Compliance Status. In addition, you must submit with the Notification of Compliance Status a signed statement by a responsible official that certifies with truth, accuracy, and completeness that the dry rotary dryer will dry furnish with a maximum inlet moisture content less than or equal to 30 percent (by weight, dry basis) and will operate with a maximum inlet temperature of less than or equal to 600 °F in the future.

§ 63.2264 Initial compliance demonstration for a hardwood veneer dryer.

If you operate a hardwood veneer dryer, you must record the annual volume percentage of softwood veneer species processed in the dryer as follows:

(a) Use Equation 1 of this section to calculate the annual volume percentage of softwood species dried:

$$SW_{\%} = \frac{SW}{T}\ (100) \qquad \text{(Eq. 1)}$$

Where:

SW% = annual volume percent softwood species dried;

SW = softwood veneer dried during the previous 12 months, thousand square feet (3/8-inch basis);

T = total softwood and hardwood veneer dried during the previous 12 months, thousand square feet (3/8-inch basis).

(b) You must designate and clearly identify each hardwood veneer dryer.

sfrattini on LAPJZKW1R2 with $$_JOB
VerDate Sep<11>2014 09:16 Apr 04, 2023 Jkt 256165 PO 00000 Frm 00331 Fmt 8010 Sfmt 8010 Q:\40\256165.XXX PC31
ER72AD04.006</MATH>

Submit with the Notification of Compliance Status the annual volume percentage of softwood species dried in the dryer based on your dryer production for the 12 months prior to the compliance date specified for your source in § 63.2233. If you did not dry any softwood species in the dryer during the 12 months prior to the compliance date, then you need only to submit a statement indicating that no softwood species were dried. In addition, submit with the Notification of Compliance Status a signed statement by a responsible official that certifies with truth, accuracy, and completeness that the veneer dryer will be used to process less than 30 volume percent softwood species in the future.

§ 63.2265 Initial compliance demonstration for a softwood veneer dryer.

If you operate a softwood veneer dryer, you must develop a plan for review and approval for minimizing fugitive emissions from the veneer dryer heated zones, and you must submit the plan with your Notification of Compliance Status.

§ 63.2266 Initial compliance demonstration for a veneer redryer.

If you operate a veneer redryer, you must record the inlet moisture content of the veneer processed in the redryer according to §§ 63.2269(a) and (c) and 63.2270 for a minimum of 30 calendar days. You must designate and clearly identify each veneer redryer. You must submit the highest recorded 24-hour average inlet veneer moisture content with your Notification of Compliance Status to show that your veneer redryer processes veneer with an inlet moisture content of less than or equal to 25 percent (by weight, dry basis). In addition, submit with the Notification of Compliance Status a signed statement by a responsible official that certifies with truth, accuracy, and completeness that the veneer redryer will dry veneer with a moisture content less than 25 percent (by weight, dry basis) in the future.

§ 63.2267 Initial compliance demonstration for a reconstituted wood product press or board cooler.

If you operate a reconstituted wood product press at a new or existing affected source or a reconstituted wood product board cooler at a new affected source, then you must either use a wood products enclosure as defined in § 63.2292 or measure the capture efficiency of the capture device for the press or board cooler using Methods 204 and 204A through 204F of 40 CFR part 51, appendix M (as appropriate), or using the alternative tracer gas method contained in appendix A to this subpart. You must submit documentation that the wood products enclosure meets the press enclosure design criteria in § 63.2292 or the results of the capture efficiency verification with your Notification of Compliance Status.

§ 63.2268 Initial compliance demonstration for a wet control device.

If you use a wet control device as the sole means of reducing HAP emissions, you must develop and implement a plan for review and approval to address how organic HAP captured in the wastewater from the wet control device is contained or destroyed to minimize re-release to the atmosphere such that the desired emissions reductions are obtained. You must submit the plan with your Notification of Compliance Status.

§ 63.2269 What are my monitoring installation, operation, and maintenance requirements?

(a) *General continuous parameter monitoring requirements.* You must install, operate, and maintain each continuous parameter monitoring system (CPMS) according to paragraphs (a)(1) through (3) of this section.

(1) The CPMS must be capable of completing a minimum of one cycle of operation (sampling, analyzing, and recording) for each successive 15-minute period.

(2) At all times, you must maintain the monitoring equipment including, but not limited to, maintaining necessary parts for routine repairs of the monitoring equipment.

sfrattini on LAPJZKW1R2 with $$_JOB
VerDate Sep<11>2014 09:16 Apr 04, 2023 Jkt 256165 PO 00000 Frm 00332 Fmt 8010 Sfmt 8010 Q:\40\256165.XXX PC31

(3) Record the results of each inspection, calibration, and validation check.

(b) *Temperature monitoring*. For each temperature monitoring device, you must meet the requirements in paragraphs (a) and (b)(1) through (6) of this section.

(1) Locate the temperature sensor in a position that provides a representative temperature.

(2) Use a temperature sensor with a minimum accuracy of 4 °F or 0.75 percent of the temperature value, whichever is larger.

(3) If a chart recorder is used, it must have a sensitivity with minor divisions not more than 20 °F.

(4) Validate the temperature sensor's reading at least semiannually using the requirements of paragraph (b)(4)(i), (ii), (iii), (iv), or (v) of this section:

(i) Compare measured readings to a National Institute of Standards and Technology (NIST) traceable temperature measurement device or simulate a typical operating temperature using a NIST traceable temperature simulation device. When the temperature measurement device method is used, the sensor of the NIST traceable calibrated device must be placed as close as practicable to the process sensor, and both devices must be subjected to the same environmental conditions. The accuracy of the temperature measured must be 2.5 percent of the temperature measured by the NIST traceable device or 5 °F, whichever is greater.

(ii) Follow applicable procedures in the thermocouple manufacturer owner's manual.

(iii) Request thermocouple manufacturer to certify or re-certify electromotive force (electrical properties) of the thermocouple.

(iv) Replace thermocouple with a new certified thermocouple in lieu of validation.

(v) Permanently install a redundant temperature sensor as close as practicable to the process temperature sensor. The sensors must yield a reading within 30 °F of each other for thermal oxidizers and catalytic oxidizers; within 5 °F of each other for biofilters; and within 20 °F of each other for dry rotary dryers.

(5) Conduct validation checks using the procedures in paragraph (b)(4) of this section any time the sensor exceeds the manufacturer's specified maximum operating temperature range or install a new temperature sensor.

(6) At least quarterly, inspect all components for integrity and all electrical connections for continuity, oxidation, and galvanic corrosion.

(c) Wood moisture monitoring. For each furnish or veneer moisture meter, you must meet the requirements in paragraphs (a)(1) through (3) and paragraphs (c)(1) through (5) of this section.

(1) For dry rotary dryers, use a continuous moisture monitor with a minimum accuracy of 1 percent (dry basis) moisture or better in the 25 to 35 percent (dry basis) moisture content range. For veneer redryers, use a continuous moisture monitor with a minimum accuracy of 3 percent (dry basis) moisture or better in the 15 to 25 percent (dry basis) moisture content range. Alternatively, you may use a continuous moisture monitor with a minimum accuracy of 5 percent (dry basis) moisture or better for dry rotary dryers used to dry furnish with less than 25 percent (dry basis) moisture or for veneer redryers used to redry veneer with less than 20 percent (dry basis) moisture.

(2) Locate the moisture monitor in a position that provides a representative measure of furnish or veneer moisture.

(3) Calibrate the moisture monitor based on the procedures specified by the moisture monitor manufacturer at least once per semiannual compliance period (or more frequently if recommended by the moisture monitor manufacturer).

(4) At least quarterly, inspect all components of the moisture monitor for integrity and all electrical connections for continuity.

(5) Use Equation 1 of this section to convert percent moisture measurements wet basis to a dry basis:

$$MC_{dry} = \frac{MC_{wet}/100}{1-\left(MC_{wet}/100\right)}(100) \qquad \text{(Eq. 1)}$$

Where:

MC_{dry} = percent moisture content of wood material (weight percent, dry basis);

MC_{wet} = percent moisture content of wood material (weight percent, wet basis).

sfrattini on LAPJZKW1R2 with $$_JOB
VerDate Sep<11>2014 09:16 Apr 04, 2023 Jkt 256165 PO 00000 Frm 00333 Fmt 8010 Sfmt 8010 Q:\40\256165.XXX PC31
ER72AD04.012</GPH>

(d) *Continuous emission monitoring system(s).* Each CEMS must be installed, operated, and maintained according to paragraphs (d)(1) through (4) of this section.

(1) Each CEMS for monitoring THC concentration must be installed, operated, and maintained according to Performance Specification 8 of 40 CFR part 60, appendix B. You must also comply with Procedure 1 of 40 CFR part 60, appendix F.

(2) You must conduct a performance evaluation of each CEMS according to the requirements in § 63.8 and according to Performance Specification 8 of 40 CFR part 60, appendix B.

(3) As specified in § 63.8(c)(4)(ii), each CEMS must complete a minimum of one cycle of operation (sampling, analyzing, and data recording) for each successive 15-minute period.

(4) The CEMS data must be reduced as specified in §§ 63.8(g)(2) and 63.2270(d) and (e).

[69 FR 46011, July 30, 2004, as amended at 71 FR 8372, Feb. 16, 2006; 85 FR 49456, Aug. 13, 2020]

CONTINUOUS COMPLIANCE REQUIREMENTS

§ 63.2270 How do I monitor and collect data to demonstrate continuous compliance?

(a) You must monitor and collect data according to this section.

(b) Except for, as appropriate, monitor malfunctions, associated repairs, and required quality assurance or control activities (including, as applicable, calibration checks and required zero and span adjustments), you must conduct all monitoring in continuous operation at all times that the process unit is operating. For purposes of calculating data averages, you must not use data recorded during monitoring malfunctions, associated repairs, out-of-control periods, or required quality assurance or control activities. You must use all the data collected during all other periods in assessing compliance. A monitoring malfunction is any sudden, infrequent, not reasonably preventable failure of the monitoring to provide valid data. Monitoring failures that are caused in part by poor maintenance or careless operation are not malfunctions. Any period for which the monitoring system is out-of-control and data are not available for required calculations constitutes a deviation from the monitoring requirements.

(c) You may not use data recorded during monitoring malfunctions, associated repairs, and required quality assurance or control activities or data recorded during periods of safety-related shutdown, pressurized refiner startup or shutdown, startup and shutdown of direct-fired softwood veneer dryer gas-fired burners, or control device downtime covered in any approved routine control device maintenance exemption in data averages and calculations used to report emission or operating levels, nor may such data be used in fulfilling a minimum data availability requirement, if applicable. You must use all the data collected during all other periods in assessing the operation of the control system.

(d) Except as provided in paragraph (e) of this section, determine the 3-hour block average of all recorded readings, calculated after every 3 hours of operation as the average of the evenly spaced recorded readings in the previous 3 operating hours (excluding periods described in paragraphs (b) and (c) of this section).

(e) For dry rotary dryer and veneer redryer wood moisture monitoring, dry rotary dryer temperature monitoring, biofilter bed temperature monitoring, and biofilter outlet THC monitoring, determine the 24-hour block average of all recorded readings, calculated after every 24 hours of operation as the average of the evenly spaced recorded readings in the previous 24 operating hours (excluding periods described in paragraphs (b) and (c) of this section).

(f) To calculate the data averages for each 3-hour or 24-hour averaging period, you must have at least 75 percent of the required recorded readings for that period using only recorded readings that are based on valid data (*i.e.*, not from periods described in paragraphs (b) and (c) of this section).

[69 FR 46011, July 30, 2004, as amended at 85 FR 49456, Aug. 13, 2020]

sfrattini on LAPJZKW1R2 with $$_JOB
VerDate Sep<11>2014 09:16 Apr 04, 2023 Jkt 256165 PO 00000 Frm 00334 Fmt 8010 Sfmt 8010 Q:\40\256165.XXX PC31

§ 63.2271 How do I demonstrate continuous compliance with the compliance options, operating requirements, and work practice requirements?

(a) You must demonstrate continuous compliance with the compliance options, operating requirements, and work practice requirements in §§ 63.2240 and 63.2241 that apply to you according to the methods specified in Tables 7 and 8 to this subpart.

(b) You must report each instance in which you did not meet each compliance option, operating requirement, and work practice requirement in Tables 7 and 8 to this subpart that applies to you. This includes periods of startup, shutdown, and malfunction and periods of control device maintenance specified in paragraphs (b)(1) through (4) of this section. These instances are deviations from the compliance options, operating requirements, and work practice requirements in this subpart. These deviations must be reported according to the requirements in § 63.2281.

(1)–(2) [Reserved]

(3) Deviations that occur during periods of control device maintenance covered by any approved routine control device maintenance exemption are not violations if you demonstrate to the EPA Administrator's satisfaction that you were operating in accordance with the approved routine control device maintenance exemption.

(4) Instances of safety-related shutdown, pressurized refiner startup and shutdown, and startup and shutdown of direct-fired softwood veneer dryer gas-fired burners subject to the work practice requirements in Table 3 to this subpart (rows 6 through 8) must be reported as required in § 63.2281(c)(4). Instances when the work practice requirements in Table 3 to this subpart (rows 6 through 8) are used are not considered to be deviations from (or violations of) the otherwise applicable compliance options, operating requirements and work practice requirements (in rows 1 through 5 of Table 3 to this subpart) as long as you do not exceed the minimum amount of time necessary for these events.

[69 FR 46011, July 30, 2004, as amended at 71 FR 20463, Apr. 20, 2006; 85 FR 49456, Aug. 13, 2020]

NOTIFICATIONS, REPORTS, AND RECORDS

§ 63.2280 What notifications must I submit and when?

(a) You must submit all of the notifications in §§ 63.7(b) and (c), 63.8(e), (f)(4) and (f)(6), 63.9 (b) through (e), and (g) and (h) by the dates specified.

(b) You must submit an Initial Notification no later than 120 calendar days after September 28, 2004, 120 calendar days after initial startup, or no later than 120 days after the source becomes subject to this subpart, whichever is later, as specified in § 63.9(b)(2). Initial Notifications required to be submitted after August 13, 2020, for affected sources that commence construction or reconstruction after September 6, 2019, and on and after August 13, 2021, for all other affected sources submitting initial notifications required in § 63.9(b) must be submitted following the procedure specified in § 63.2281(h), (k), and (l).

(c) If you are required to conduct a performance test, you must submit a written notification of intent to conduct a performance test at least 60 calendar days before the performance test is scheduled to begin as specified in § 63.7(b)(1).

(d) If you are required to conduct a performance test, design evaluation, or other compliance demonstration as specified in Tables 4, 5, and 6 to this subpart, or a repeat performance test as specified in Table 7 to this subpart, you must submit a Notification of Compliance Status as specified in § 63.9(h)(2)(ii). After August 13, 2020 for affected sources that commence construction or reconstruction after September 6, 2019, and on and after August 13, 2021 for all other affected sources, submit all subsequent Notifications of Compliance Status following the procedure specified in § 63.2281(h), (k), and (l).

(1) For each initial compliance demonstration required in Table 5 or 6 to this subpart that does not include a performance test, you must submit the Notification of Compliance Status before the close of business on the 30th

sfrattini on LAPJZKW1R2 with $$_JOB
VerDate Sep<11>2014 09:16 Apr 04, 2023 Jkt 256165 PO 00000 Frm 00335 Fmt 8010 Sfmt 8010 Q:\40\256165.XXX PC31

calendar day following the completion of the initial compliance demonstration.

(2) For each compliance demonstration required in Tables 5, 6, and 7 to this subpart that includes a performance test conducted according to the requirements in Table 4 to this subpart, you must submit the Notification of Compliance Status, including a summary of the performance test results, before the close of business on the 60th calendar day following the completion of the performance test.

(e) If you request a routine control device maintenance exemption according to § 63.2251, you must submit your request for the exemption no later than 30 days before the compliance date.

(f) If you use the emissions averaging compliance option in § 63.2240(c), you must submit an Emissions Averaging Plan to the EPA Administrator for approval no later than 1 year before the compliance date or no later than 1 year before the date you would begin using an emissions average, whichever is later. The Emissions Averaging Plan must include the information in paragraphs (f)(1) through (6) of this section.

(1) Identification of all the process units to be included in the emissions average indicating which process units will be used to generate credits, and which process units that are subject to compliance options in Tables 1A and 1B to this subpart will be uncontrolled (used to generate debits) or under-controlled (used to generate debits and credits).

(2) Description of the control system used to generate emission credits for each process unit used to generate credits.

(3) Determination of the total HAP control efficiency for the control system used to generate emission credits for each credit-generating process unit.

(4) Calculation of the RMR and AMR, as calculated using Equations 1 through 3 of § 63.2240(c)(1).

(5) Documentation of total HAP measurements made according to § 63.2240(c)(2)(iv) and other relevant documentation to support calculation of the RMR and AMR.

(6) A summary of the operating parameters you will monitor and monitoring methods for each debit-generating and credit-generating process unit.

(g) You must notify the EPA Administrator within 30 days before you take any of the actions specified in paragraphs (g)(1) through (3) of this section.

(1) You modify or replace the control system for any process unit subject to the compliance options and operating requirements in this subpart.

(2) You shut down any process unit included in your Emissions Averaging Plan.

(3) You change a continuous monitoring parameter or the value or range of values of a continuous monitoring parameter for any process unit or control device.

[69 FR 46011, July 30, 2004, as amended at 85 FR 49457, Aug. 13, 2020; 85 FR 73902, Nov. 19, 2020]

§ 63.2281 What reports must I submit and when?

(a) You must submit each report in Table 9 to this subpart that applies to you.

(b) Unless the EPA Administrator has approved a different schedule for submission of reports under § 63.10(a), you must submit each report by the date in Table 9 to this subpart and as specified in paragraphs (b)(1) through (6) of this section.

(1) The first compliance report must cover the period beginning on the compliance date that is specified for your affected source in § 63.2233 ending on June 30 or December 31, and lasting at least 6 months, but less than 12 months. For example, if your compliance date is March 1, then the first semiannual reporting period would begin on March 1 and end on December 31.

(2) The first compliance report must be postmarked or delivered no later than July 31 or January 31 for compliance periods ending on June 30 and December 31, respectively.

(3) Each subsequent compliance report must cover the semiannual reporting period from January 1 through June 30 or the semiannual reporting period from July 1 through December 31.

(4) Each subsequent compliance report must be postmarked or delivered no later than July 31 or January 31 for

sfrattini on LAPJZKW1R2 with $$_JOB
VerDate Sep<11>2014 09:16 Apr 04, 2023 Jkt 256165 PO 00000 Frm 00336 Fmt 8010 Sfmt 8010 Q:\40\256165.XXX PC31

the semiannual reporting period ending on June 30 and December 31, respectively.

(5) For each affected source that is subject to permitting regulations pursuant to 40 CFR part 70 or 40 CFR part 71, and if the permitting authority has established dates for submitting semiannual reports pursuant to §70.6(a)(3)(iii)(A) or §71.6(a)(3)(iii)(A), you may submit the first and subsequent compliance reports according to the dates the permitting authority has established instead of according to the dates in paragraphs (b)(1) through (4) of this section.

(6) After August 13, 2020 for affected sources that commenced construction or reconstruction after September 6, 2019, and on and after August 13, 2021 for all other affected sources, submit all subsequent reports following the procedure specified in paragraphs (h), (k) and (l) of this section.

(c) The compliance report must contain the information in paragraphs (c)(1) through (8) of this section.

(1) Company name and address.

(2) Statement by a responsible official with that official's name, title, and signature, certifying the truth, accuracy, and completeness of the content of the report.

(3) Date of report and beginning and ending dates of the reporting period.

(4) If you had a startup, shutdown, or malfunction during the reporting period and you took actions consistent with your SSMP, the compliance report must include the information specified in §63.10(d)(5)(i) before August 13, 2021 for affected sources that commenced construction or reconstruction before September 6, 2019. After August 13, 2020 for affected sources that commenced construction or reconstruction after September 6, 2019, and on and after August 13, 2021 for all other affected sources, the compliance report must include the number of instances and total amount of time during the reporting period in which each of the startup/shutdown work practice requirements in Table 3 to this subpart (rows 6 through 8) is used in place of the otherwise applicable compliance options, operating requirements, and work practice requirements (in Table 3 to this subpart rows 1 through 5). If a startup/shutdown work practice in Table 3 to this subpart (rows 6 through 8) is used for more than a total of 100 hours during the semiannual reporting period, you must report the date, time and duration of each instance when that startup/shutdown work practice was used.

(5) A description of control device maintenance performed while the control device was offline and one or more of the process units controlled by the control device was operating, including the information specified in paragraphs (c)(5)(i) through (iii) of this section.

(i) The date and time when the control device was shut down and restarted.

(ii) Identification of the process units that were operating and the number of hours that each process unit operated while the control device was offline.

(iii) A statement of whether or not the control device maintenance was included in your approved routine control device maintenance exemption developed pursuant to §63.2251. If the control device maintenance was included in your approved routine control device maintenance exemption, then you must report the information in paragraphs (c)(5)(iii)(A) through (C) of this section.

(A) The total amount of time that each process unit controlled by the control device operated during the semiannual compliance period and during the previous semiannual compliance period.

(B) The amount of time that each process unit controlled by the control device operated while the control device was down for maintenance covered under the routine control device maintenance exemption during the semiannual compliance period and during the previous semiannual compliance period.

(C) Based on the information recorded under paragraphs (c)(5)(iii)(A) and (B) of this section for each process unit, compute the annual percent of process unit operating uptime during which the control device was offline for routine maintenance using Equation 1 of this section.

sfrattini on LAPJZKW1R2 with $$_JOB
VerDate Sep<11>2014 09:16 Apr 04, 2023 Jkt 256165 PO 00000 Frm 00337 Fmt 8010 Sfmt 8010 Q:\40\256165.XXX PC31

$$RM = \frac{DT_p + DT_c}{PU_p + PU_c} \qquad \text{(Eq. 1)}$$

Where:

RM = Annual percentage of process unit uptime during which control device is down for routine control device maintenance;

PU_p = Process unit uptime for the previous semiannual compliance period;

PU_c = Process unit uptime for the current semiannual compliance period;

DT_p = Control device downtime claimed under the routine control device maintenance exemption for the previous semiannual compliance period;

DT_c = Control device downtime claimed under the routine control device maintenance exemption for the current semiannual compliance period.

(6) [Reserved]

(7) If there are no deviations from any applicable compliance option or operating requirement, and there are no deviations from the requirements for work practice requirements in Table 8 to this subpart, a statement that there were no deviations from the compliance options, operating requirements, or work practice requirements during the reporting period.

(8) If there were no periods during which the continuous monitoring system (CMS), including CEMS and CPMS, was out-of-control as specified in § 63.8(c)(7), a statement that there were no periods during which the CMS was out-of-control during the reporting period.

(d) For each deviation from a compliance option or operating requirement and for each deviation from the work practice requirements in Table 8 to this subpart that occurs at an affected source where you are not using a CMS to comply with the compliance options, operating requirements, or work practice requirements in this subpart, the compliance report must contain the information in paragraphs (c)(1) through (6) of this section and in paragraphs (d)(1) and (2) of this section. This includes periods of startup, shutdown, and malfunction and routine control device maintenance.

(1) The total operating time of each affected source during the reporting period.

(2) Information on the date, time, duration, and cause of deviations (including unknown cause, if applicable), as applicable, and the corrective action taken.

(e) For each deviation from a compliance option, operating requirement, or work practice requirement occurring at an affected source where you are using a CMS to comply with the compliance options, operating requirements, or work practice requirements in this subpart, you must include the information in paragraphs (c)(1) through (6) and (e)(1) through (13) of this section. This includes periods of startup, shutdown, and malfunction and routine control device maintenance.

(1) [Reserved]

(2) The date, time, and duration that each CMS was inoperative, except for zero (low-level) and high-level checks.

(3) The date, time, and duration that each CMS was out-of-control, including the information in § 63.8(c)(8).

(4) The date and time that each deviation started and stopped, and whether each deviation occurred during a period of startup, shutdown, or malfunction; during a period of control device maintenance covered in your approved routine control device maintenance exemption; or during another period.

(5) A summary of the total duration of the deviation during the reporting period and the total duration as a percent of the total source operating time during that reporting period.

(6) A breakdown of the total duration of the deviations during the reporting period into those that are due to startup, shutdown, control system problems, control device maintenance, process problems, other known causes, and other unknown causes.

(7) A summary of the total duration of CMS downtime during the reporting period and the total duration of CMS downtime as a percent of the total source operating time during that reporting period.

(8) A brief description of the process units.

(9) A brief description of the CMS.

(10) The date of the latest CMS certification or audit.

(11) A description of any changes in CMS, processes, or controls since the last reporting period.

sfrattini on LAPJZKW1R2 with $$_JOB
VerDate Sep<11>2014 09:16 Apr 04, 2023 Jkt 256165 PO 00000 Frm 00338 Fmt 8010 Sfmt 8010 Q:\40\256165.XXX PC31
ER72AD04.007</MATH>

(12) For any failure to meet a compliance option in §63.2240, including the compliance options in Table 1A or 1B to this subpart or the emissions averaging compliance option, provide an estimate of the quantity of each regulated pollutant emitted over any emission limit, and a description of the method used to estimate the emissions.

(13) The total operating time of each affected source during the reporting period.

(f) If you comply with the emissions averaging compliance option in §63.2240(c), you must include in your semiannual compliance report calculations based on operating data from the semiannual reporting period that demonstrate that actual mass removal equals or exceeds the required mass removal.

(g) Each affected source that has obtained a title V operating permit pursuant to 40 CFR part 70 or 40 CFR part 71 must report all deviations as defined in this subpart in the semiannual monitoring report required by §70.6(a)(3)(iii)(A) or §71.6(a)(3)(iii)(A). If an affected source submits a compliance report pursuant to Table 9 to this subpart along with, or as part of, the semiannual monitoring report required by §70.6(a)(3)(iii)(A) or §71.6(a)(3)(iii)(A), and the compliance report includes all required information concerning deviations from any compliance option, operating requirement, or work practice requirement in this subpart, submission of the compliance report shall be deemed to satisfy any obligation to report the same deviations in the semiannual monitoring report. However, submission of a compliance report shall not otherwise affect any obligation the affected source may have to report deviations from permit requirements to the permitting authority.

(h) If you are required to submit reports following the procedure specified in this paragraph (h), you must submit reports to the EPA via the Compliance and Emissions Data Reporting Interface (CEDRI), which can be accessed through the EPA's Central Data Exchange (CDX) (*https://cdx.epa.gov/*). The EPA will make all the information submitted through CEDRI available to the public without further notice to you. Do not use CEDRI to submit information you claim as confidential business information (CBI). Anything submitted using CEDRI cannot later be claimed to be CBI. For semiannual compliance reports required in this section and Table 9 (row 1) to this subpart, you must use the appropriate electronic report template on the CEDRI website (*https://www.epa.gov/electronic-reporting-air-emissions/compliance-and-emissions-data-reporting-interface-cedri*) for this subpart once the reporting template has been available on the CEDRI website for 1 year. The date report templates become available will be listed on the CEDRI website. If the reporting form for the semiannual compliance report specific to this subpart is not available in CEDRI at the time that the report is due, you must submit the report to the Administrator at the appropriate addresses listed in §63.13. You must begin submitting all subsequent reports via CEDRI in the first full reporting period after the report template for this subpart has been available in CEDRI for 1 year. Initial Notifications developed according to §63.2280(b) and Notifications of Compliance Status developed according to §63.2280(d) may be uploaded in a user-specified format such as portable document format (PDF). The report must be submitted by the deadline specified in this subpart, regardless of the method in which the report is submitted. Although we do not expect persons to assert a claim of CBI, if persons wish to assert a CBI claim, submit a complete report, including information claimed to be CBI, to the EPA. The report must be generated using the appropriate form on the CEDRI website. Submit the file on a compact disc, flash drive, or other commonly used electronic storage medium and clearly mark the medium as CBI. Mail the electronic medium to U.S. EPA/OAQPS/CORE CBI Office, Attention: Group Leader, Measurement Policy Group, MD C404–02, 4930 Old Page Rd., Durham, NC 27703. The same file with the CBI omitted must be submitted to the EPA via the EPA's CDX. All CBI claims must be asserted at the time of submission. Furthermore, under CAA section 114(c) emissions data is not entitled to confidential treatment and requires EPA

sfrattini on LAPJZKW1R2 with $$_JOB
VerDate Sep<11>2014 09:16 Apr 04, 2023 Jkt 256165 PO 00000 Frm 00339 Fmt 8010 Sfmt 8010 Q:\40\256165.XXX PC31

to make emissions data available to the public. Thus, emissions data will not be protected as CBI and will be made publicly available.

(i) Within 60 days after the date of completing each performance test required by this subpart, you must submit the results of the performance test following the procedures specified in paragraphs (i)(1) through (3) of this section.

(1) *Data collected using test methods supported by the EPA's Electronic Reporting Tool (ERT) as listed on the EPA's ERT website (https://www.epa.gov/electronic-reporting-air-emissions/electronic-reporting-tool-ert) at the time of the test.* Submit the results of the performance test to the EPA via CEDRI, which can be accessed through the EPA's CDX (*https://cdx.epa.gov/*). The data must be submitted in a file format generated through the use of the EPA's ERT. Alternatively, you may submit an electronic file consistent with the extensible markup language (XML) schema listed on the EPA's ERT website.

(2) *Data collected using test methods that are not supported by the EPA's ERT as listed on the EPA's ERT website at the time of the test.* The results of the performance test must be included as an attachment in the ERT or an alternate electronic file consistent with the XML schema listed on the EPA's ERT website. Submit the ERT generated package or alternative file to the EPA via CEDRI.

(3) *Confidential Business Information (CBI).* The EPA will make all the information submitted through CEDRI available to the public without further notice to you. Do not use CEDRI to submit information you claim as CBI. Anything submitted using CEDRI cannot later be claimed to be CBI. Although we do not expect persons to assert a claim of CBI, if you claim some of the information submitted under this paragraph (i) is CBI, you must submit a complete file, including information claimed to be CBI, to the EPA. The file must be generated through the use of the EPA's ERT or an alternate electronic file consistent with the XML schema listed on the EPA's ERT website. Submit the file on a compact disc, flash drive, or other commonly used electronic storage medium and clearly mark the medium as CBI. Mail the electronic medium to U.S. EPA/OAQPS/CORE CBI Office, Attention: Group Leader, Measurement Policy Group, MD C404–02, 4930 Old Page Rd., Durham, NC 27703. The same file with the CBI omitted must be submitted to the EPA via the EPA's CDX as described in this paragraph (i). All CBI claims must be asserted at the time of submission. Furthermore, under CAA section 114(c) emissions data is not entitled to confidential treatment and requires EPA to make emissions data available to the public. Thus, emissions data will not be protected as CBI and will be made publicly available.

(j) Within 60 days after the date of completing each continuous monitoring system (CMS) performance evaluation (as defined in § 63.2), you must submit the results of the performance evaluation following the procedures specified in paragraphs (j)(1) through (3) of this section.

(1) *Performance evaluations of CMS measuring relative accuracy test audit (RATA) pollutants that are supported by the EPA's ERT as listed on the EPA's ERT website at the time of the evaluation.* Submit the results of the performance evaluation to the EPA via CEDRI, which can be accessed through the EPA's CDX. The data must be submitted in a file format generated through the use of the EPA's ERT. Alternatively, you may submit an electronic file consistent with the XML schema listed on the EPA's ERT website.

(2) *Performance evaluations of CMS measuring RATA pollutants that are not supported by the EPA's ERT as listed on the EPA's ERT website at the time of the evaluation.* The results of the performance evaluation must be included as an attachment in the ERT or an alternate electronic file consistent with the XML schema listed on the EPA's ERT website. Submit the ERT generated package or alternative file to the EPA via CEDRI.

(3) *Confidential Business Information (CBI).* The EPA will make all the information submitted through CEDRI available to the public without further notice to you. Do not use CEDRI to submit information you claim as CBI.

sfrattini on LAPJZKW1R2 with $$_JOB
VerDate Sep<11>2014 09:16 Apr 04, 2023 Jkt 256165 PO 00000 Frm 00340 Fmt 8010 Sfmt 8010 Q:\40\256165.XXX PC31

Anything submitted using CEDRI cannot later be claimed to be CBI. Although we do not expect persons to assert a claim of CBI, if you claim some of the information submitted under this paragraph (j) is CBI, you must submit a complete file, including information claimed to be CBI, to the EPA. The file must be generated through the use of the EPA's ERT or an alternate electronic file consistent with the XML schema listed on the EPA's ERT website. Submit the file on a compact disc, flash drive, or other commonly used electronic storage medium and clearly mark the medium as CBI. Mail the electronic medium to U.S. EPA/OAQPS/CORE CBI Office, Attention: Group Leader, Measurement Policy Group, MD C404–02, 4930 Old Page Rd., Durham, NC 27703. The same file with the CBI omitted must be submitted to the EPA via the EPA's CDX as described in this paragraph (j). All CBI claims must be asserted at the time of submission. Furthermore, under CAA section 114(c) emissions data is not entitled to confidential treatment and requires EPA to make emissions data available to the public. Thus, emissions data will not be protected as CBI and will be made publicly available.

(k) If you are required to electronically submit a report or notification through CEDRI in the EPA's CDX by this subpart, you may assert a claim of EPA system outage for failure to timely comply with the electronic submittal reporting requirement in this section. To assert a claim of EPA system outage, you must meet the requirements outlined in paragraphs (k)(1) through (7) of this section.

(1) You must have been or will be precluded from accessing CEDRI and submitting a required report within the time prescribed due to an outage of either the EPA's CEDRI or CDX systems.

(2) The outage must have occurred within the period of time beginning 5 business days prior to the date that the submission is due.

(3) The outage may be planned or unplanned.

(4) You must submit notification to the Administrator in writing as soon as possible following the date you first knew, or through due diligence should have known, that the event may cause or has caused a delay in reporting.

(5) You must provide to the Administrator a written description identifying:

(i) The date(s) and time(s) when CDX or CEDRI was accessed and the system was unavailable;

(ii) A rationale for attributing the delay in reporting beyond the regulatory deadline to EPA system outage;

(iii) Measures taken or to be taken to minimize the delay in reporting; and

(iv) The date by which you propose to report, or if you have already met the electronic submittal requirement in this subpart at the time of the notification, the date you submitted the report.

(6) The decision to accept the claim of EPA system outage and allow an extension to the reporting deadline is solely within the discretion of the Administrator.

(7) In any circumstance, the report must be submitted electronically as soon as possible after the outage is resolved.

(l) If you are required to electronically submit a report through CEDRI in the EPA's CDX by this subpart, you may assert a claim of *force majeure* for failure to timely comply with the electronic submittal requirement in this section. To assert a claim of *force majeure*, you must meet the requirements outlined in paragraphs (l)(1) through (5) of this section.

(1) You may submit a claim if a *force majeure* event is about to occur, occurs, or has occurred or there are lingering effects from such an event within the period of time beginning five business days prior to the date the submission is due. For the purposes of this section, a *force majeure* event is defined as an event that will be or has been caused by circumstances beyond the control of the affected facility, its contractors, or any entity controlled by the affected facility that prevents you from complying with the requirement to submit a report electronically within the time period prescribed. Examples of such events are acts of nature (*e.g.*, hurricanes, earthquakes, or floods), acts of war or terrorism, or equipment failure or safety hazard beyond the control of

sfrattini on LAPJZKW1R2 with $$_JOB
VerDate Sep<11>2014 09:16 Apr 04, 2023 Jkt 256165 PO 00000 Frm 00341 Fmt 8010 Sfmt 8010 Q:\40\256165.XXX PC31

the affected facility (*e.g.*, large scale power outage).

(2) You must submit notification to the Administrator in writing as soon as possible following the date you first knew, or through due diligence should have known, that the event may cause or has caused a delay in reporting.

(3) You must provide to the Administrator:

(i) A written description of the *force majeure* event;

(ii) A rationale for attributing the delay in reporting beyond the regulatory deadline to the *force majeure* event;

(iii) Measures taken or to be taken to minimize the delay in reporting; and

(iv) The date by which you propose to report, or if you have already met the electronic submittal requirement in this subpart at the time of the notification, the date you submitted the report.

(4) The decision to accept the claim of *force majeure* and allow an extension to the reporting deadline is solely within the discretion of the Administrator.

(5) In any circumstance, the reporting must occur as soon as possible after the *force majeure* event occurs.

[69 FR 46011, July 30, 2004, as amended at 85 FR 49457, Aug. 13, 2020]

§ 63.2282 What records must I keep?

(a) You must keep the records listed in paragraphs (a)(1) through (4) of this section.

(1) A copy of each notification and report that you submitted to comply with this subpart, including all documentation supporting any Initial Notification or Notification of Compliance Status that you submitted, according to the requirements in § 63.10(b)(2)(xiv).

(2) Before August 13, 2021, the records in § 63.6(e)(3)(iii) through (v) related to startup, shutdown, and malfunction for affected sources that commenced construction or reconstruction before September 6, 2019. After August 13, 2020 for affected sources that commenced construction or reconstruction after September 6, 2019, and on and after August 13, 2021 for all other affected sources, the records related to startup and shutdown, failures to meet the standard, and actions taken to minimize emissions, specified in paragraphs (a)(2)(i) through (iv) of this section.

(i) Record the date, time, and duration of each startup and/or shutdown period, including the periods when the affected source was subject to the standard applicable to startup and shutdown.

(ii) In the event that an affected unit fails to meet an applicable standard, record the number of failures; for each failure, record the date, time, cause and duration of each failure.

(iii) For each failure to meet an applicable standard, record and retain a list of the affected sources or equipment, and the following information:

(A) For any failure to meet a compliance option in § 63.2240, including the compliance options in Table 1A or 1B to this subpart or the emissions averaging compliance option, record an estimate of the quantity of each regulated pollutant emitted over any emission limit and a description of the method used to estimate the emissions.

(B) For each failure to meet an operating requirement in Table 2 to this subpart or work practice requirement in Table 3 to this subpart, maintain sufficient information to estimate the quantity of each regulated pollutant emitted over the emission limit. This information must be sufficient to provide a reliable emissions estimate if requested by the Administrator.

(iv) Record actions taken to minimize emissions in accordance with § 63.2250(g), and any corrective actions taken to return the affected unit to its normal or usual manner of operation.

(3) Documentation of your approved routine control device maintenance exemption, if you request such an exemption under § 63.2251.

(4) Records of performance tests and performance evaluations as required in § 63.10(b)(2)(viii).

(b) You must keep the records required in Tables 7 and 8 to this subpart to show continuous compliance with each compliance option, operating requirement, and work practice requirement that applies to you.

(c) For each CEMS, you must keep the following records.

(1) Records described in § 63.10(b)(2)(vi) through (xi).

sfrattini on LAPJZKW1R2 with $$_JOB
VerDate Sep<11>2014 09:16 Apr 04, 2023 Jkt 256165 PO 00000 Frm 00342 Fmt 8010 Sfmt 8010 Q:\40\256165.XXX PC31

(2) Previous (*i.e.*, superseded) versions of the performance evaluation plan, with the program of corrective action included in the plan required under § 63.8(d)(2).

(3) Request for alternatives to relative accuracy testing for CEMS as required in § 63.8(f)(6)(i).

(4) Records of the date and time that each deviation started and stopped, and whether the deviation occurred during a period of startup, shutdown, or malfunction or during another period.

(d) If you comply with the emissions averaging compliance option in § 63.2240(c), you must keep records of all information required to calculate emission debits and credits.

(e) If you operate a catalytic oxidizer, you must keep records of annual catalyst activity checks and subsequent corrective actions.

(f) You must keep the written CMS quality control procedures required by § 63.8(d)(2) on record for the life of the affected source or until the affected source is no longer subject to the provisions of this subpart, to be made available for inspection, upon request, by the Administrator. If the performance evaluation plan is revised, you must keep previous (*i.e.*, superseded) versions of the performance evaluation plan on record to be made available for inspection, upon request, by the Administrator, for a period of 5 years after each revision to the plan. The program of corrective action should be included in the plan required under § 63.8(d)(2).

[69 FR 46011, July 30, 2004, as amended at 85 FR 49459, Aug. 13, 2020; 85 FR 51668, Aug. 21, 2020]

§ 63.2283 In what form and how long must I keep my records?

(a) Your records must be in a form suitable and readily available for expeditious review as specified in § 63.10(b)(1).

(b) As specified in § 63.10(b)(1), you must keep each record for 5 years following the date of each occurrence, measurement, maintenance, corrective action, report, or record.

(c) You must keep each record on site for at least 2 years after the date of each occurrence, measurement, maintenance, corrective action, report, or record according to § 63.10(b)(1). You can keep the records offsite for the remaining 3 years.

(d) Any records required to be maintained by this part that are submitted electronically via the EPA's CEDRI may be maintained in electronic format. This ability to maintain electronic copies does not affect the requirement for facilities to make records, data, and reports available upon request to a delegated air agency or the EPA as part of an on-site compliance evaluation.

[69 FR 46011, July 30, 2004, as amended at 85 FR 49460, Aug. 13, 2020]

OTHER REQUIREMENTS AND INFORMATION

§ 63.2290 What parts of the general provisions apply to me?

Table 10 to this subpart shows which parts of the general provisions in §§ 63.1 through 63.16 apply to you.

[85 FR 49460, Aug. 13, 2020]

§ 63.2291 Who implements and enforces this subpart?

(a) This subpart can be implemented and enforced by the U.S. EPA or a delegated authority such as your State, local, or tribal agency. If the EPA Administrator has delegated authority to your State, local, or tribal agency, then that agency has the authority to implement and enforce this subpart. You should contact your EPA Regional Office to find out if this subpart is delegated to your State, local, or tribal agency.

(b) In delegating implementation and enforcement authority of this subpart to a State, local, or tribal agency under 40 CFR part 63, subpart E, the authorities contained in paragraph (c) of this section are retained by the EPA Administrator and are not transferred to the State, local, or tribal agency.

(c) The authorities that will not be delegated to State, local, or tribal agencies are listed in paragraphs (c)(1) through (5) of this section.

(1) Approval of alternatives to the compliance options, operating requirements, and work practice requirements in §§ 63.2240 and 63.2241 as specified in § 63.6(g). For the purposes of delegation authority under 40 CFR part 63, subpart E, ''compliance options'' represent

sfrattini on LAPJZKW1R2 with $$_JOB
VerDate Sep<11>2014 09:16 Apr 04, 2023 Jkt 256165 PO 00000 Frm 00343 Fmt 8010 Sfmt 8010 Q:\40\256165.XXX PC31

''emission limits''; ''operating requirements'' represent ''operating limits''; and ''work practice requirements'' represent ''work practice standards.''

(2) Approval of major alternatives to test methods as specified in § 63.7(e)(2)(ii) and (f) and as defined in § 63.90.

(3) Approval of major alternatives to monitoring as specified in § 63.8(f) and as defined in § 63.90.

(4) Approval of major alternatives to recordkeeping and reporting as specified in § 63.10(f) and as defined in § 63.90.

(5) Approval of an alternative to any electronic reporting to the EPA required by this subpart.

[69 FR 46011, July 30, 2004, as amended at 72 FR 61063, Oct. 29, 2007; 85 FR 49460, Aug. 13, 2020]

§ 63.2292 What definitions apply to this subpart?

Terms used in this subpart are defined in the Clean Air Act (CAA), in 40 CFR 63.2, the General Provisions, and in this section as follows:

Affected source means the collection of dryers, refiners, blenders, formers, presses, board coolers, and other process units associated with the manufacturing of plywood and composite wood products. The affected source includes, but is not limited to, green end operations, refining, drying operations (including any combustion unit exhaust stream routinely used to direct fire process unit(s)), resin preparation, blending and forming operations, pressing and board cooling operations, and miscellaneous finishing operations (such as sanding, sawing, patching, edge sealing, and other finishing operations not subject to other NESHAP). The affected source also includes onsite storage of raw materials used in the manufacture of plywood and/or composite wood products, such as resins; onsite wastewater treatment operations specifically associated with plywood and composite wood products manufacturing; and miscellaneous coating operations (defined elsewhere in this section). The affected source includes lumber kilns at PCWP manufacturing facilities and at any other kind of facility.

Agricultural fiber means the fiber of an annual agricultural crop. Examples of agricultural fibers include, but are not limited to, wheat straw, rice straw, and bagasse.

Biofilter means an enclosed control system such as a tank or series of tanks with a fixed roof that contact emissions with a solid media (such as bark) and use microbiological activity to transform organic pollutants in a process exhaust stream to innocuous compounds such as carbon dioxide, water, and inorganic salts. Wastewater treatment systems such as aeration lagoons or activated sludge systems are not considered to be biofilters.

Capture device means a hood, enclosure, or other means of collecting emissions into a duct so that the emissions can be measured.

Capture efficiency means the fraction (expressed as a percentage) of the pollutants from an emission source that are collected by a capture device.

Catalytic oxidizer means a control system that combusts or oxidizes, in the presence of a catalyst, exhaust gas from a process unit. Catalytic oxidizers include regenerative catalytic oxidizers and thermal catalytic oxidizers.

Combustion unit means a dryer burner, process heater, or boiler. Combustion units may be used for combustion of organic HAP emissions.

Control device means any equipment that reduces the quantity of HAP emitted to the air. The device may destroy the HAP or secure the HAP for subsequent recovery. Control devices include, but are not limited to, thermal or catalytic oxidizers, combustion units that incinerate process exhausts, biofilters, and condensers.

Control system or add-on control system means the combination of capture and control devices used to reduce HAP emissions to the atmosphere.

Conveyor strand dryer means a conveyor dryer used to reduce the moisture of wood strands used in the manufacture of oriented strandboard, laminated strand lumber, or other wood strand-based products. A *conveyor strand dryer* is a process unit.

Conveyor strand dryer zone means each portion of a conveyor strand dryer with a separate heat exchange system and exhaust vent(s). Conveyor strand dryers contain multiple zones (e.g.,

sfrattini on LAPJZKW1R2 with $$_JOB
VerDate Sep<11>2014 09:16 Apr 04, 2023 Jkt 256165 PO 00000 Frm 00344 Fmt 8010 Sfmt 8010 Q:\40\256165.XXX PC31

three zones), which may be divided into multiple sections.

Deviation means any instance in which an affected source subject to this subpart, or an owner or operator of such a source:

(1) Fails to meet any requirement or obligation established by this subpart including, but not limited to, any compliance option, operating requirement, or work practice requirement;

(2) Fails to meet any term or condition that is adopted to implement an applicable requirement in this subpart, and that is included in the operating permit for any affected source required to obtain such a permit; or

(3) Fails to meet any compliance option, operating requirement, or work practice requirement in this subpart during startup, shutdown, or malfunction, regardless of whether or not such failure is permitted by this subpart. A deviation is not always a violation. The determination of whether a deviation constitutes a violation of the standard is up to the discretion of the entity responsible for enforcement of the standards.

Direct-fired process unit means a process unit that is heated by the passing of combustion exhaust through the process unit such that the process material is contacted by the combustion exhaust.

Dryer heated zones means the zones of a softwood veneer dryer or fiberboard mat dryer that are equipped with heating and hot air circulation units. The cooling zone(s) of the dryer through which ambient air is blown are not part of the dryer heated zones.

Dry forming means the process of making a mat of resinated fiber to be compressed into a reconstituted wood product such as particleboard, oriented strandboard, medium density fiberboard, or hardboard.

Dry rotary dryer means a rotary dryer that dries wood particles or fibers with a maximum inlet moisture content of less than or equal to 30 percent (by weight, dry basis) and operates with a maximum inlet temperature of less than or equal to 600 °F. A dry rotary dryer is a process unit.

Engineered wood product means a product made with lumber, veneers, strands of wood, or from other small wood elements that are bound together with resin. Engineered wood products include, but are not limited to, laminated strand lumber, laminated veneer lumber, parallel strand lumber, wood I-joists, and glue-laminated beams.

Fiber means the discrete elements of wood or similar cellulosic material, which are separated by mechanical means, as in refining, that can be formed into boards.

Fiberboard means a composite panel composed of cellulosic fibers (usually wood or agricultural material) made by wet forming and compacting a mat of fibers. Fiberboard density generally is less than 0.50 grams per cubic centimeter (31.5 pounds per cubic foot).

Fiberboard mat dryer means a dryer used to reduce the moisture of wet-formed wood fiber mats by applying heat. A *fiberboard mat dryer* is a process unit.

Flame zone means the portion of the combustion chamber in a combustion unit that is occupied by the flame envelope.

Furnish means the fibers, particles, or strands used for making boards.

Glue-laminated beam means a structural wood beam made by bonding lumber together along its faces with resin.

Green rotary dryer means a rotary dryer that dries wood particles or fibers with an inlet moisture content of greater than 30 percent (by weight, dry basis) at any dryer inlet temperature or operates with an inlet temperature of greater than 600 °F with any inlet moisture content. A *green rotary dryer* is a process unit.

Group 1 miscellaneous coating operations means application of edge seals, nail lines, logo (or other information) paint, shelving edge fillers, trademark/gradestamp inks, and wood putty patches to plywood and composite wood products (except kiln-dried lumber) on the same site where the plywood and composite wood products are manufactured. Group 1 miscellaneous coating operations also include application of synthetic patches to plywood at new affected sources.

Hardboard means a composite panel composed of inter-felted cellulosic fibers made by dry or wet forming and pressing of a resinated fiber mat. Hardboard generally has a density of 0.50

sfrattini on LAPJZKW1R2 with $$_JOB
VerDate Sep<11>2014 09:16 Apr 04, 2023 Jkt 256165 PO 00000 Frm 00345 Fmt 8010 Sfmt 8010 Q:\40\256165.XXX PC31

grams per cubic centimeter (31.5 pounds per cubic foot) or greater.

Hardboard oven means an oven used to heat treat or temper hardboard after hot pressing. Humidification chambers are not considered as part of hardboard ovens. A *hardboard oven* is a process unit.

Hardwood means the wood of a broadleafed tree, either deciduous or evergreen. Examples of hardwoods include, but are not limited to, aspen, birch, poplar, and oak.

Hardwood veneer dryer means a dryer that removes excess moisture from veneer by conveying the veneer through a heated medium on rollers, belts, cables, or wire mesh. Hardwood veneer dryers are used to dry veneer with less than 30 percent softwood species on an annual volume basis. Veneer kilns that operate as batch units, veneer dryers heated by radio frequency or microwaves that are used to redry veneer, and veneer redryers (defined elsewhere in this section) that are heated by conventional means are not considered to be hardwood veneer dryers. A *hardwood veneer dryer* is a process unit.

Kiln-dried lumber means solid wood lumber that has been dried in a lumber kiln.

Laminated strand lumber (LSL) means a composite product formed into a billet made of thin wood strands cut from whole logs, resinated, and pressed together with the grain of each strand oriented parallel to the length of the finished product.

Laminated veneer lumber (LVL) means a composite product formed into a billet made from layers of resinated wood veneer sheets or pieces pressed together with the grain of each veneer aligned primarily along the length of the finished product. *Laminated veneer lumber* is also known as parallel strand lumber (PSL).

Lumber means boards or planks sawed or split from logs or timber, including logs or timber processed for use as utility poles or other wood components. Lumber can be either green (non-dried) or dried. Lumber is typically either air-dried or kiln-dried.

Lumber kiln means an enclosed dryer operated by applying heat to reduce the moisture content of lumber.

Medium density fiberboard (MDF) means a composite panel composed of cellulosic fibers (usually wood or agricultural fiber) made by dry forming and pressing of a resinated fiber mat.

Method detection limit means the minimum concentration of an analyte that can be determined with 99 percent confidence that the true value is greater than zero.

Miscellaneous coating operations means application of any of the following to plywood or composite wood products: edge seals, moisture sealants, anti-skid coatings, company logos, trademark or grade stamps, nail lines, synthetic patches, wood patches, wood putty, concrete forming oils, glues for veneer composing, and shelving edge fillers. Miscellaneous coating operations also include the application of primer to oriented strandboard siding that occurs at the same site as oriented strandboard manufacture and application of asphalt, clay slurry, or titanium dioxide coatings to fiberboard at the same site of fiberboard manufacture.

Molded particleboard means a shaped composite product (other than a composite panel) composed primarily of cellulosic materials (usually wood or agricultural fiber) generally in the form of discrete pieces or particles, as distinguished from fibers, which are pressed together with resin.

MSF means thousand square feet (92.9 square meters). Square footage of panels is usually measured on a thickness basis, such as ⅜-inch, to define the total volume of panels. Equation 3 of § 63.2262(j) shows how to convert from one thickness basis to another.

Nondetect data means, for the purposes of this subpart, any value that is below the method detection limit.

Non-HAP coating means a coating with HAP contents below 0.1 percent by mass for Occupational Safety and Health Administration-defined carcinogens as specified in section A.6.4 of appendix A to 29 CFR 1910.1200, and below 1.0 percent by mass for other HAP compounds.

1-hour period means a 60-minute period.

Oriented strandboard (OSB) means a composite panel produced from thin wood strands cut from whole logs,

sfrattini on LAPJZKW1R2 with $$_JOB
VerDate Sep<11>2014 09:16 Apr 04, 2023 Jkt 256165 PO 00000 Frm 00346 Fmt 8010 Sfmt 8010 Q:\40\256165.XXX PC31

formed into resinated layers (with the grain of strands in one layer oriented perpendicular to the strands in adjacent layers), and pressed.

Oven-dried ton(s) (ODT) means tons of wood dried until all of the moisture in the wood is removed. One oven-dried ton equals 907 oven-dried kilograms.

Parallel strand lumber (PSL) means a composite product formed into a billet made from layers of resinated wood veneer sheets or pieces pressed together with the grain of each veneer aligned primarily along the length of the finished product. *Parallel strand lumber* is also known as laminated veneer lumber (LVL).

Partial wood products enclosure means an enclosure that does not meet the design criteria for a wood products enclosure as defined in this subpart.

Particle means a discrete, small piece of cellulosic material (usually wood or agricultural fiber) produced mechanically and used as the aggregate for a particleboard.

Particleboard means a composite panel composed primarily of cellulosic materials (usually wood or agricultural fiber) generally in the form of discrete pieces or particles, as distinguished from fibers, which are pressed together with resin.

Plywood means a panel product consisting of layers of wood veneers hot pressed together with resin. Plywood includes panel products made by hot pressing (with resin) veneers to a substrate such as particleboard, medium density fiberboard, or lumber. Plywood products may be flat or curved.

Plywood and composite wood products (PCWP) manufacturing facility means a facility that manufactures plywood and/or composite wood products by bonding wood material (fibers, particles, strands, veneers, etc.) or agricultural fiber, generally with resin under heat and pressure, to form a panel, engineered wood product, or other product defined in § 63.2292. Plywood and composite wood products manufacturing facilities also include facilities that manufacture dry veneer and lumber kilns located at any facility. Plywood and composite wood products include, but are not limited to, plywood, veneer, particleboard, molded particleboard, oriented strandboard, hardboard, fiberboard, medium density fiberboard, laminated strand lumber, laminated veneer lumber, wood I-joists, kiln-dried lumber, and glue-laminated beams.

Press predryer means a dryer used to reduce the moisture and elevate the temperature by applying heat to a wet-formed fiber mat before the mat enters a hot press. A *press predryer* is a process unit.

Pressurized refiner means a piece of equipment operated under pressure for preheating (usually by steaming) wood material and refining (rubbing or grinding) the wood material into fibers. Pressurized refiners are operated with continuous infeed and outfeed of wood material and maintain elevated internal pressures (*i.e.*, there is no pressure release) throughout the preheating and refining process. A *pressurized refiner* is a process unit.

Primary tube dryer means a single-stage tube dryer or the first stage of a multi-stage tube dryer. Tube dryer stages are separated by vents for removal of moist gases between stages (*e.g.*, a product cyclone at the end of a single-stage dryer or between the first and second stages of a multi-stage tube dryer). The first stage of a multi-stage tube dryer is used to remove the majority of the moisture from the wood furnish (compared to the moisture reduction in subsequent stages of the tube dryer). Blow-lines used to apply resin are considered part of the primary tube dryer. A *primary tube dryer* is a process unit.

Process unit means equipment classified according to its function such as a blender, dryer, press, former, or board cooler.

Reconstituted wood product board cooler means a piece of equipment designed to reduce the temperature of a board by means of forced air or convection within a controlled time period after the board exits the reconstituted wood product press unloader. Board coolers include wicket and star type coolers commonly found at medium density fiberboard and particleboard plants. Board coolers do not include cooling sections of dryers (*e.g.*, veneer dryers or fiberboard mat dryers) or coolers integrated into or following hardboard

sfrattini on LAPJZKW1R2 with $$_JOB
VerDate Sep<11>2014 09:16 Apr 04, 2023 Jkt 256165 PO 00000 Frm 00347 Fmt 8010 Sfmt 8010 Q:\40\256165.XXX PC31

bake ovens or humidifiers. A *reconstituted wood product board cooler* is a process unit.

Reconstituted wood product press means a press, including (if applicable) the press unloader, that presses a resinated mat of wood fibers, particles, or strands between hot platens or hot rollers to compact and set the mat into a panel by simultaneous application of heat and pressure. Reconstituted wood product presses are used in the manufacture of hardboard, medium density fiberboard, particleboard, and oriented strandboard. Extruders are not considered to be reconstituted wood product presses. A *reconstituted wood product press* is a process unit.

Representative operating conditions means operation of a process unit during performance testing under the conditions that the process unit will typically be operating in the future, including use of a representative range of materials (*e.g.*, wood material of a typical species mix and moisture content or typical resin formulation) and representative operating temperature range. Representative operating conditions exclude periods of startup and shutdown.

Resin means the synthetic adhesive (including glue) or natural binder, including additives, used to bond wood or other cellulosic materials together to produce plywood and composite wood products.

Responsible official means responsible official as defined in 40 CFR 70.2 and 40 CFR 71.2.

Rotary strand dryer means a rotary dryer operated by applying heat and used to reduce the moisture of wood strands used in the manufacture of oriented strandboard, laminated strand lumber, or other wood strand-based products. A *rotary strand dryer* is a process unit.

Safety-related shutdown means an unscheduled shutdown of a process unit subject to a compliance option in Table 1B to this subpart (or a process unit with HAP control under an emissions averaging plan developed according to § 63.2240(c)) during which time emissions from the process unit cannot be safely routed to the control system in place to meet the compliance options or operating requirements in this subpart without imminent danger to the process, control system, or system operator.

Secondary tube dryer means the second stage and subsequent stages following the primary stage of a multistage tube dryer. Secondary tube dryers, also referred to as relay dryers, operate at lower temperatures than the primary tube dryer they follow. Secondary tube dryers are used to remove only a small amount of the furnish moisture compared to the furnish moisture reduction across the primary tube dryer. A *secondary tube dryer* is a process unit.

Softwood means the wood of a coniferous tree. Examples of softwoods include, but are not limited to, Southern yellow pine, Douglas fir, and White spruce.

Softwood veneer dryer means a dryer that removes excess moisture from veneer by conveying the veneer through a heated medium, generally on rollers, belts, cables, or wire mesh. Softwood veneer dryers are used to dry veneer with greater than or equal to 30 percent softwood species on an annual volume basis. Veneer kilns that operate as batch units, veneer dryers heated by radio frequency or microwaves that are used to redry veneer, and veneer redryers (defined elsewhere in this section) that are heated by conventional means are not considered to be softwood veneer dryers. A *softwood veneer dryer* is a process unit.

Startup means bringing equipment online and starting the production process.

Startup, initial means the first time equipment is put into operation. Initial startup does not include operation solely for testing equipment. Initial startup does not include subsequent startups (as defined in this section) following malfunction or shutdowns or following changes in product or between batch operations. Initial startup does not include startup of equipment that occurred when the source was an area source.

Strand means a long (with respect to thickness and width), flat wood piece specially cut from a log for use in oriented strandboard, laminated strand lumber, or other wood strand-based product.

sfrattini on LAPJZKW1R2 with $$_JOB
VerDate Sep<11>2014 09:16 Apr 04, 2023 Jkt 256165 PO 00000 Frm 00348 Fmt 8010 Sfmt 8010 Q:\40\256165.XXX PC31

Temporary total enclosure (TTE) means an enclosure constructed for the purpose of measuring the capture efficiency of pollutants emitted from a given source, as defined in Method 204 of 40 CFR part 51, appendix M.

Thermal oxidizer means a control system that combusts or oxidizes exhaust gas from a process unit. Thermal oxidizers include regenerative thermal oxidizers and combustion units.

Total hazardous air pollutant emissions means, for purposes of this subpart, the sum of the emissions of the following six compounds: acetaldehyde, acrolein, formaldehyde, methanol, phenol, and propionaldehyde.

Tube dryer means a single-stage or multi-stage dryer operated by applying heat to reduce the moisture of wood fibers or particles as they are conveyed (usually pneumatically) through the dryer. Resin may or may not be applied to the wood material before it enters the tube dryer. Tube dryers do not include pneumatic fiber transport systems that use temperature and humidity conditioned pneumatic system supply air in order to prevent cooling of the wood fiber as it is moved through the process. A *tube dryer* is a process unit.

Veneer means thin sheets of wood peeled or sliced from logs for use in the manufacture of wood products such as plywood, laminated veneer lumber, or other products.

Veneer redryer means a dryer heated by conventional means, such as direct wood-fired, direct-gas-fired, or steam heated, that is used to redry veneer that has been previously dried. Because the veneer dried in a veneer redryer has been previously dried, the inlet moisture content of the veneer entering the redryer is less than 25 percent (by weight, dry basis). Batch units used to redry veneer (such as redry cookers) are not considered to be veneer redryers. A *veneer redryer* is a process unit.

Wet control device means any equipment that uses water as a means of collecting an air pollutant. Wet control devices include scrubbers, wet electrostatic precipitators, and electrified filter beds. Wet control devices do not include biofilters or other equipment that destroys or degrades HAP.

Wet forming means the process of making a slurry of water, fiber, and additives into a mat of fibers to be compressed into a fiberboard or hardboard product.

Wood I-joists means a structural wood beam with an I-shaped cross section formed by bonding (with resin) wood or laminated veneer lumber flanges onto a web cut from a panel such as plywood or oriented strandboard.

Wood products enclosure means a permanently installed containment that was designed to meet the following physical design criteria:

(1) Any natural draft opening shall be at least four equivalent opening diameters from each HAP-emitting point, except for where board enters and exits the enclosure, unless otherwise specified by the EPA Administrator.

(2) The total area of all natural draft openings shall not exceed 5 percent of the surface area of the enclosure's four walls, floor, and ceiling.

(3) The average facial velocity of air through all natural draft openings shall be at least 3,600 meters per hour (200 feet per minute). The direction of airflow through all natural draft openings shall be into the enclosure.

(4) All access doors and windows whose areas are not included in item 2 of this definition and are not included in the calculation of facial velocity in item 3 of this definition shall be closed during routine operation of the process.

(5) The enclosure is designed and maintained to capture all emissions for discharge through a control device.

Work practice requirement means any design, equipment, work practice, or operational standard, or combination thereof, that is promulgated pursuant to section 112(h) of the CAA.

[69 FR 46011, July 30, 2004, as amended at 71 FR 8372, Feb. 16, 2006; 85 FR 49460, Aug. 13, 2020]

sfrattini on LAPJZKW1R2 with $$_JOB
VerDate Sep<11>2014 09:16 Apr 04, 2023 Jkt 256165 PO 00000 Frm 00349 Fmt 8010 Sfmt 8010 Q:\40\256165.XXX PC31

TABLE 1A TO SUBPART DDDD OF PART 63—PRODUCTION-BASED COMPLIANCE OPTIONS

For the following process units . . .	You must meet the following production-based compliance option (total HAP[a] basis) . . .
(1) Fiberboard mat dryer heated zones (at new affected sources only)	0.022 lb/MSF ½″.
(2) Green rotary dryers	0.058 lb/ODT.
(3) Hardboard ovens	0.022 lb/MSF ⅛″.
(4) Press predryers (at new affected sources only)	0.037 lb/MSF ½″.
(5) Pressurized refiners	0.039 lb/ODT.
(6) Primary tube dryers	0.26 lb/ODT.
(7) Reconstituted wood product board coolers (at new affected sources only)	0.014 lb/MSF ¾″.
(8) Reconstituted wood product presses	0.30 lb/MSF ¾″.
(9) Softwood veneer dryer heated zones	0.022 lb/MSF ⅜″.
(10) Rotary strand dryers	0.18 lb/ODT.
(11) Secondary tube dryers	0.010 lb/ODT.

[a] Total HAP, as defined in § 63.2292, includes acetaldehyde, acrolein, formaldehyde, methanol, phenol, and propionaldehyde. lb/ODT = pounds per oven-dried ton; lb/MSF = pounds per thousand square feet with a specified thickness basis (inches). Section 63.2262(j) shows how to convert from one thickness basis to another.

NOTE: There is no production-based compliance option for conveyor strand dryers.

TABLE 1B TO SUBPART DDDD OF PART 63—ADD-ON CONTROL SYSTEMS COMPLIANCE OPTIONS

For each of the following process units . . .	You must comply with one of the following six compliance options by using an emissions control system . . .
Fiberboard mat dryer heated zones (at new affected sources only); green rotary dryers; hardboard ovens; press predryers (at new affected sources only); pressurized refiners; primary tube dryers; secondary tube dryers; reconstituted wood product board coolers (at new affected sources only); reconstituted wood product presses; softwood veneer dryer heated zones; rotary strand dryers; conveyor strand dryer zone one (at existing affected sources); and conveyor strand dryer zones one and two (at new affected sources).	(1) Reduce emissions of total HAP, measured as THC (as carbon)[a], by 90 percent; or (2) Limit emissions of total HAP, measured as THC (as carbon)[a], to 20 ppmvd; or (3) Reduce methanol emissions by 90 percent; or (4) Limit methanol emissions to less than or equal to 1 ppmvd if uncontrolled methanol emissions entering the control device are greater than or equal to 10 ppmvd; or (5) Reduce formaldehyde emissions by 90 percent; or (6) Limit formaldehyde emissions to less than or equal to 1 ppmvd if uncontrolled formaldehyde emissions entering the control device are greater than or equal to 10 ppmvd.

[a] You may choose to subtract methane from THC as carbon measurements.

TABLE 2 TO SUBPART DDDD OF PART 63—OPERATING REQUIREMENTS

If you operate a(n) . . .	You must . . .	Or you must . . .
(1) Thermal oxidizer	Maintain the 3-hour block average firebox temperature above the minimum temperature established during the performance test.	Maintain the 3-hour block average THC concentration[1] in the thermal oxidizer exhaust below the maximum concentration established during the performance test.
(2) Catalytic oxidizer	Maintain the 3-hour block average catalytic oxidizer temperature above the minimum temperature established during the performance test; AND check the activity level of a representative sample of the catalyst annually except as specified in footnote "2" to this table.	Maintain the 3-hour block average THC concentration[1] in the catalytic oxidizer exhaust below the maximum concentration established during the performance test.
(3) Biofilter	Maintain the 24-hour block biofilter bed temperature within the range established according to § 63.2262(m).	Maintain the 24-hour block average THC concentration[1] in the biofilter exhaust below the maximum concentration established during the performance test.
(4) Control device other than a thermal oxidizer, catalytic oxidizer, or biofilter.	Petition the EPA Administrator for site-specific operating parameter(s) to be established during the performance test and maintain the average operating parameter(s) within the range(s) established during the performance test.	Maintain the 3-hour block average THC concentration[1] in the control device exhaust below the maximum concentration established during the performance test.

sfrattini on LAPJZKW1R2 with $$_JOB
VerDate Sep<11>2014 09:16 Apr 04, 2023 Jkt 256165 PO 00000 Frm 00350 Fmt 8010 Sfmt 8002 Q:\40\256165.XXX PC31

If you operate a(n) . . .	You must . . .	Or you must . . .
(5) Process unit that meets a compliance option in Table 1A to this subpart, or a process unit that generates debits in an emissions average without the use of a control device.	Maintain on a daily basis the process unit controlling operating parameter(s) within the ranges established during the performance test according to § 63.2262(n).	Maintain the 3-hour block average THC concentration [1] in the process unit exhaust below the maximum concentration established during the performance test.

[1] You may choose to subtract methane from THC measurements.
[2] You may forego the annual catalyst activity check during the calendar year when a performance test is conducted according to Table 4 to this subpart.

[85 FR 49460, Aug. 13, 2020]

TABLE 3 TO SUBPART DDDD OF PART 63—WORK PRACTICE REQUIREMENTS

For the following process units at existing or new affected sources . . .	You must . . .
(1) Dry rotary dryers	Process furnish with a 24-hour block average inlet moisture content of less than or equal to 30 percent (by weight, dry basis); AND operate with a 24-hour block average inlet dryer temperature of less than or equal to 600 °F.
(2) Hardwood veneer dryers	Process less than 30 volume percent softwood species on an annual basis.
(3) Softwood veneer dryers	Minimize fugitive emissions from the dryer doors through (proper maintenance procedures) and the green end of the dryers (through proper balancing of the heated zone exhausts).
(4) Veneer redryers	Process veneer that has been previously dried, such that the 24-hour block average inlet moisture content of the veneer is less than or equal to 25 percent (by weight, dry basis).
(5) Group 1 miscellaneous coating operations	Use non-HAP coatings as defined in § 63.2292.
(6) Process units and control systems undergoing safety-related shutdown on and after August 13, 2021 except as noted in footnote "1" to this table.	Follow documented site-specific procedures such as use of automated controls or other measures that you have developed to protect workers and equipment to ensure that the flow of raw materials (such as furnish or resin) and fuel or process heat (as applicable) ceases and that material is removed from the process unit(s) as expeditiously as possible given the system design to reduce air emissions.
(7) Pressurized refiners undergoing startup or shutdown on and after August 13, 2021 except as noted in footnote "1" to this table.	Route exhaust gases from the pressurized refiner to its dryer control system no later than 15 minutes after wood is fed to the pressurized refiner during startup. Stop wood flow into the pressurized refiner no more than 15 minutes after wood fiber and exhaust gases from the pressurized refiner stop being routed to the dryer during shutdown.
(8) Direct-fired softwood veneer dryers undergoing startup or shutdown of gas-fired burners on and after August 13, 2021 except as noted in footnote "1" to this table.	Cease feeding green veneer into the softwood veneer dryer and minimize the amount of time direct gas-fired softwood veneer dryers are vented to the atmosphere due to the conditions described in § 63.2250(d).

[1] New or reconstructed affected sources that commenced construction or reconstruction after September 6, 2019 must comply with this requirement beginning on August 13, 2020 or upon initial startup, whichever is later.

[85 FR 49461, Aug. 13, 2020]

TABLE 4 TO SUBPART DDDD OF PART 63—REQUIREMENTS FOR PERFORMANCE TESTS

For . . .	You must . . .	Using . . .
(1) each process unit subject to a compliance option in table 1A or 1B to this subpart or used in calculation of an emissions average under § 63.2240(c).	select sampling port's location and the number of traverse ports.	Method 1 or 1A of 40 CFR part 60, appendix A–1 (as appropriate).
(2) each process unit subject to a compliance option in table 1A or 1B to this subpart or used in calculation of an emissions average under § 63.2240(c).	determine velocity and volumetric flow rate.	Method 2 in addition to Method 2A, 2C, 2D, 2F, or 2G in appendices A–1 and A–2 to 40 CFR part 60 (as appropriate).
(3) each process unit subject to a compliance option in table 1A or 1B to this subpart or used in calculation of an emissions average under § 63.2240(c).	conduct gas molecular weight analysis.	Method 3, 3A, or 3B in appendix A–2 to 40 CFR part 60 (as appropriate).
(4) each process unit subject to a compliance option in table 1A or 1B to this subpart or used in calculation of an emissions average under § 63.2240(c).	measure moisture content of the stack gas.	Method 4 in appendix A–3 to 40 CFR part 60; OR Method 320 in appendix A to this part; OR ASTM D6348–03 (IBR, see § 63.14).

sfrattini on LAPJZKW1R2 with $$_JOB
VerDate Sep<11>2014 09:16 Apr 04, 2023 Jkt 256165 PO 00000 Frm 00351 Fmt 8010 Sfmt 8002 Q:\40\256165.XXX PC31

For . . .	You must . . .	Using . . .
(5) each process unit subject to a compliance option in table 1B to this subpart for which you choose to demonstrate compliance using a total HAP as THC compliance option.	measure emissions of total HAP as THC.	Method 25A in appendix A–7 to 40 CFR part 60. You may measure emissions of methane using EPA Method 18 in appendix A–6 to 40 CFR part 60 and subtract the methane emissions from the emissions of total HAP as THC.
(6) each process unit subject to a compliance option in table 1A to this subpart; OR for each process unit used in calculation of an emissions average under § 63.2240(c).	measure emissions of total HAP (as defined in § 63.2292).	Method 320 in appendix A to this part; OR the NCASI Method IM/CAN/WP–99.02 (IBR, see § 63.14); OR the NCASI Method ISS/FP–A105.01 (IBR, see § 63.14); OR ASTM D6348–03 (IBR, see § 63.14) provided that percent R as determined in Annex A5 of ASTM D6348–03 is equal or greater than 70 percent and less than or equal to 130 percent.
(7) each process unit subject to a compliance option in table 1B to this subpart for which you choose to demonstrate compliance using a methanol compliance option.	measure emissions of methanol.	Method 308 in appendix A to this part; OR Method 320 in appendix A to this part; OR the NCASI Method CI/WP–98.01 (IBR, see § 63.14); OR the NCASI Method IM/CAN/WP–99.02 (IBR, see § 63.14); OR the NCASI Method ISS/FP–A105.01 (IBR, see § 63.14).
(8) each process unit subject to a compliance option in table 1B to this subpart for which you choose to demonstrate compliance using a formaldehyde compliance option.	measure emissions of formaldehyde.	Method 316 in appendix A to this part; OR Method 320 in appendix A to this part; OR Method 0011 in ''Test Methods for Evaluating Solid Waste, Physical/Chemical Methods'' (EPA Publication No. SW–846) for formaldehyde (IBR, see § 63.14); OR the NCASI Method CI/WP–98.01 (IBR, see § 63.14); OR the NCASI Method IM/CAN/WP–99.02 (IBR, see § 63.14); OR the NCASI Method ISS/FP–A105.01 (IBR, see § 63.14).
(9) each reconstituted wood product press at a new or existing affected source or reconstituted wood product board cooler at a new affected source subject to a compliance option in table 1B to this subpart or used in calculation of an emissions average under § 63.2240(c).	meet the design specifications included in the definition of wood products enclosure in § 63.2292; or determine the percent capture efficiency of the enclosure directing emissions to an add-on control device.	Methods 204 and 204A through 204F of 40 CFR part 51, appendix M, to determine capture efficiency (except for wood products enclosures as defined in § 63.2292). Enclosures that meet the definition of wood products enclosure or that meet Method 204 requirements for a permanent total enclosure (PTE) are assumed to have a capture efficiency of 100 percent. Enclosures that do not meet either the PTE requirements or design criteria for a wood products enclosure must determine the capture efficiency by constructing a TTE according to the requirements of Method 204 and applying Methods 204A through 204F (as appropriate). As an alternative to Methods 204 and 204A through 204F, you may use the tracer gas method contained in appendix A to this subpart.
(10) each reconstituted wood product press at a new or existing affected source or reconstituted wood product board cooler at a new affected source subject to a compliance option in table 1A to this subpart.	determine the percent capture efficiency.	a TTE and Methods 204 and 204A through 204F (as appropriate) of 40 CFR part 51, appendix M. As an alternative to installing a TTE and using Methods 204 and 204A through 204F, you may use the tracer gas method contained in appendix A to this subpart. Enclosures that meet the design criteria (1) through (4) in the definition of wood products enclosure, or that meet Method 204 requirements for a PTE (except for the criteria specified in section 6.2 of Method 204) are assumed to have a capture efficiency of 100 percent. Measured emissions divided by the capture efficiency provides the emission rate.
(11) each process unit subject to a compliance option in tables 1A and 1B to this subpart or used in calculation of an emissions average under § 63.2240(c).	establish the site-specific operating requirements (including the parameter limits or THC concentration limits) in table 2 to this subpart.	data from the parameter monitoring system or THC CEMS and the applicable performance test method(s).

[85 FR 49461, Aug. 13, 2020]

sfrattini on LAPJZKW1R2 with $$_JOB
VerDate Sep<11>2014 09:16 Apr 04, 2023 Jkt 256165 PO 00000 Frm 00352 Fmt 8010 Sfmt 8026 Q:\40\256165.XXX PC31

TABLE 5 TO SUBPART DDDD OF PART 63—PERFORMANCE TESTING AND INITIAL COMPLIANCE DEMONSTRATIONS FOR THE COMPLIANCE OPTIONS AND OPERATING REQUIREMENTS

For each . . .	For the following compliance options and operating requirements . . .	You have demonstrated initial compliance if . . .
(1) Process unit listed in Table 1A to this subpart.	Meet the production-based compliance options listed in Table 1A to this subpart.	The average total HAP emissions measured using the methods in Table 4 to this subpart over the 3-hour performance test are no greater than the compliance option in Table 1A to this subpart; AND you have a record of the operating requirement(s) listed in Table 2 to this subpart for the process unit over the performance test during which emissions did not exceed the compliance option value.
(2) Process unit listed in Table 1B to this subpart.	Reduce emissions of total HAP, measured as THC, by 90 percent.	Total HAP emissions, measured using the methods in Table 4 to this subpart over the 3-hour performance test, are reduced by at least 90 percent, as calculated using the procedures in § 63.2262; AND you have a record of the operating requirement(s) listed in Table 2 to this subpart for the process unit over the performance test during which emissions were reduced by at least 90 percent.
(3) Process unit listed in Table 1B to this subpart.	Limit emissions of total HAP, measured as THC, to 20 ppmvd.	The average total HAP emissions, measured using the methods in Table 4 to this subpart over the 3-hour performance test, do not exceed 20 ppmvd; AND you have a record of the operating requirement(s) listed in Table 2 to this subpart for the process unit over the performance test during which emissions did not exceed 20 ppmvd.
(4) Process unit listed in Table 1B to this subpart.	Reduce methanol or formaldehyde emissions by 90 percent.	The methanol or formaldehyde emissions measured using the methods in Table 4 to this subpart over the 3-hour performance test, are reduced by at least 90 percent, as calculated using the procedures in § 63.2262; AND you have a record of the operating requirement(s) listed in Table 2 to this subpart for the process unit over the performance test during which emissions were reduced by at least 90 percent.
(5) Process unit listed in Table 1B to this subpart.	Limit methanol or formaldehyde emissions to less than or equal to 1 ppmvd (if uncontrolled emissions are greater than or equal to 10 ppmvd).	The average methanol or formaldehyde emissions, measured using the methods in Table 4 to this subpart over the 3-hour performance test, do not exceed 1 ppmvd; AND you have a record of the operating requirement(s) listed in Table 2 to this subpart for the process unit over the performance test during which emissions did not exceed 1 ppmvd. If the process unit is a reconstituted wood product press or a reconstituted wood product board cooler, your capture device either meets the EPA Method 204 criteria for a PTE or achieves a capture efficiency of greater than or equal to 95 percent.
(6) Reconstituted wood product press at a new or existing affected source, or reconstituted wood product board cooler at a new affected source.	Compliance options in Tables 1A and 1B to this subpart or the emissions averaging compliance option in § 63.2240(c).	You submit the results of capture efficiency verification using the methods in Table 4 to this subpart with your Notification of Compliance Status.
(7) Process unit listed in Table 1B to this subpart controlled by routing exhaust to a combustion unit.	Compliance options in Table 1B to this subpart or the emissions averaging compliance option in § 63.2240(c).	You submit with your Notification of Compliance Status documentation showing that the process exhausts controlled enter into the flame zone of your combustion unit.

sfrattini on LAPJZKW1R2 with $$_JOB
VerDate Sep<11>2014 09:16 Apr 04, 2023 Jkt 256165 PO 00000 Frm 00353 Fmt 8010 Sfmt 8002 Q:\40\256165.XXX PC31

For each . . .	For the following compliance options and operating requirements . . .	You have demonstrated initial compliance if . . .
(8) Process unit listed in Table 1B to this subpart using a wet control device as the sole means of reducing HAP emissions.	Compliance options in Table 1B to this subpart or the emissions averaging compliance option in § 63.2240(c).	You submit with your Notification of Compliance Status your plan to address how organic HAP captured in the wastewater from the wet control device is contained or destroyed to minimize re-release to the atmosphere.

TABLE 6 TO SUBPART DDDD OF PART 63—INITIAL COMPLIANCE DEMONSTRATIONS FOR WORK PRACTICE REQUIREMENTS

For each . . .	For the following work practice requirements . . .	You have demonstrated initial compliance if . . .
(1) Dry rotary dryer	Process furnish with an inlet moisture content less than or equal to 30 percent (by weight, dry basis) AND operate with an inlet dryer temperature of less than or equal to 600 °F.	You meet the work practice requirement AND you submit a signed statement with the Notification of Compliance Status that the dryer meets the criteria of a ''dry rotary dryer'' AND you have a record of the inlet moisture content and inlet dryer temperature (as required in § 63.2263).
(2) Hardwood veneer dryer	Process less than 30 volume percent softwood species.	You meet the work practice requirement AND you submit a signed statement with the Notification of Compliance Status that the dryer meets the criteria of a ''hardwood veneer dryer'' AND you have a record of the percentage of softwoods processed in the dryer (as required in § 63.2264).
(3) Softwood veneer dryer	Minimize fugitive emissions from the dryer doors and the green end.	You meet the work practice requirement AND you submit with the Notification of Compliance Status a copy of your plan for minimizing fugitive emissions from the veneer dryer heated zones (as required in § 63.2265).
(4) Veneer redryers	Process veneer with an inlet moisture content of less than or equal to 25 percent (by weight, dry basis).	You meet the work practice requirement AND you submit a signed statement with the Notification of Compliance Status that the dryer operates only as a redryer AND you have a record of the veneer inlet moisture content of the veneer processed in the redryer (as required in § 63.2266).
(5) Group 1 miscellaneous coating operations.	Use non-HAP coatings as defined in § 63.2292.	You meet the work practice requirement AND you submit a signed statement with the Notification of Compliance Status that you are using non-HAP coatings AND you have a record showing that you are using non-HAP coatings.
(6) Process units and control systems undergoing safety-related shutdown on and after August 13, 2021, except as noted in footnote ''1'' to this table.	Follow documented site-specific procedures to ensure the flow of raw materials and fuel or process heat ceases and that material is removed from the process unit(s) as expeditiously as possible given the system design to reduce air emissions.	You meet the work practice requirement AND you have a record of safety-related shutdown procedures available for inspection by the delegated authority upon request.
(7) Pressurized refiners undergoing start-up or shutdown on and after August 13, 2021, except as noted in footnote ''1'' to this table.	Route exhaust gases from the pressurized refiner to its dryer control system no later than 15 minutes after wood is fed to the pressurized refiner during startup. Stop wood flow into the pressurized refiner no more than 15 minutes after wood fiber and exhaust gases from the pressurized refiner stop being routed to the dryer during shutdown.	You meet the work practice requirement AND you have a record of pressurized refiner startup and shutdown procedures available for inspection by the delegated authority upon request.

sfrattini on LAPJZKW1R2 with $$_JOB
VerDate Sep<11>2014 09:16 Apr 04, 2023 Jkt 256165 PO 00000 Frm 00354 Fmt 8010 Sfmt 8002 Q:\40\256165.XXX PC31

For each . . .	For the following work practice requirements . . .	You have demonstrated initial compliance if . . .
(8) Direct-fired softwood veneer dryers undergoing startup or shutdown of gas-fired burners on and after August 13, 2021, except as noted in footnote "1" to this table.	Cease feeding green veneer into the softwood veneer dryer and minimize the amount of time direct gas-fired softwood veneer dryers are vented to the atmosphere due to the conditions described in § 63.2250(d).	You meet the work practice requirement AND you have a record of the procedures for startup and shutdown of softwood veneer dryer gas-fired burners available for inspection by the delegated authority upon request.

[1] New or reconstructed affected sources that commenced construction or reconstruction after September 6, 2019 must comply with this requirement beginning on August 13, 2020 or upon initial startup, whichever is later.

[85 FR 49462, Aug. 13, 2020]

TABLE 7 TO SUBPART DDDD OF PART 63—CONTINUOUS COMPLIANCE WITH THE COMPLIANCE OPTIONS AND OPERATING REQUIREMENTS

For . . .	For the following compliance options and operating requirements . . .	You must demonstrate continuous compliance by . . .
(1) Each process unit listed in Table 1B to this subpart or used in calculation of an emissions average under § 63.2240(c).	Compliance options in Table 1B to this subpart or the emissions averaging compliance option in § 63.2240(c) and the operating requirements in Table 2 to this subpart based on monitoring of operating parameters.	Collecting and recording the operating parameter monitoring system data listed in Table 2 to this subpart for the process unit according to §§ 63.2269(a) through (b) and 63.2270; AND reducing the operating parameter monitoring system data to the specified averages in units of the applicable requirement according to calculations in § 63.2270; AND maintaining the average operating parameter at or above the minimum, at or below the maximum, or within the range (whichever applies) established according to § 63.2262.
(2) Each process unit listed in Tables 1A and 1B to this subpart or used in calculation of an emissions average under § 63.2240(c).	Compliance options in Tables 1A and 1B to this subpart or the emissions averaging compliance option in § 63.2240(c) and the operating requirements in Table 2 to this subpart based on THC CEMS data.	Collecting and recording the THC monitoring data listed in Table 2 to this subpart for the process unit according to § 63.2269(d); AND reducing the CEMS data to 3-hour block averages according to calculations in § 63.2269(d); AND maintaining the 3-hour block average THC concentration in the exhaust gases less than or equal to the THC concentration established according to § 63.2262.
(3) Each process unit using a biofilter	Compliance options in Tables 1B to this subpart or the emissions averaging compliance option in § 63.2240(c).	Conducting a repeat performance test using the applicable method(s) specified in Table 4 to this subpart [1] within 2 years following the previous performance test and within 180 days after each replacement of any portion of the biofilter bed media with a different type of media or each replacement of more than 50 percent (by volume) of the biofilter bed media with the same type of media.
(4) Each process unit using a catalytic oxidizer.	Compliance options in Table 1B to this subpart or the emissions averaging compliance option in § 63.2240(c).	Checking the activity level of a representative sample of the catalyst at least annually [2] and taking any necessary corrective action to ensure that the catalyst is performing within its design range.
(5) Each process unit listed in Table 1A to this subpart, or each process unit without a control device used in calculation of an emissions averaging debit under § 63.2240(c).	Compliance options in Table 1A to this subpart or the emissions averaging compliance option in § 63.2240(c) and the operating requirements in Table 2 to this subpart based on monitoring of process unit controlling operating parameters.	Collecting and recording on a daily basis process unit controlling operating parameter data; AND maintaining the operating parameter at or above the minimum, at or below the maximum, or within the range (whichever applies) established according to § 63.2262.

sfrattini on LAPJZKW1R2 with $$_JOB
VerDate Sep<11>2014 09:16 Apr 04, 2023 Jkt 256165 PO 00000 Frm 00355 Fmt 8010 Sfmt 8002 Q:\40\256165.XXX PC31

For . . .	For the following compliance options and operating requirements . . .	You must demonstrate continuous compliance by . . .
(6) Each Process unit listed in Table 1B to this subpart using a wet control device as the sole means of reducing HAP emissions.	Compliance options in Table 1B to this subpart or the emissions averaging compliance option in § 63.2240(c).	Implementing your plan to address how organic HAP captured in the wastewater from the wet control device is contained or destroyed to minimize re-release to the atmosphere.
(7) Each process unit listed in Table 1B to this subpart using a control device other than a biofilter.	Compliance options in Tables 1B to this subpart.	Conducting a repeat performance test using the applicable method(s) specified in Table 4 to this subpart [1] by August 13, 2023 or within 60 months following the previous performance test, whichever is later, and thereafter within 60 months following the previous performance test.

[1] When conducting a repeat performance test, the capture efficiency demonstration required in Table 4 to this subpart, row 9 is not required to be repeated with the repeat emissions test if the capture device is maintained and operated consistent with its design as well as its operation during the previous capture efficiency demonstration conducted according to Table 4 to this subpart, row 9 as specified in § 63.2267.

[2] You may forego the annual catalyst activity check during the calendar year when a performance test is conducted according to Table 4 to this subpart.

[85 FR 49463, Aug. 13, 2020]

Table 8 to Subpart DDDD of Part 63—Continuous Compliance With the Work Practice Requirements

For . . .	For the following work practice requirements . . .	You must demonstrate continuous compliance by . . .
(1) Dry rotary dryer	Process furnish with an inlet moisture content less than or equal to 30 percent (by weight, dry basis) AND operate with an inlet dryer temperature of less than or equal to 600 °F.	Maintaining the 24-hour block average inlet furnish moisture content at less than or equal to 30 percent (by weight, dry basis) AND maintaining the 24-hour block average inlet dryer temperature at less than or equal to 600 °F; AND keeping records of the inlet temperature of furnish moisture content and inlet dryer temperature.
(2) Hardwood veneer dryer	Process less than 30 volume percent softwood species.	Maintaining the volume percent softwood species processed below 30 percent AND keeping records of the volume percent softwood species processed.
(3) Softwood veneer dryer	Minimize fugitive emissions from the dryer doors and the green end.	Following (and documenting that you are following) your plan for minimizing fugitive emissions.
(4) Veneer redryers	Process veneer with an inlet moisture content of less than or equal to 25 percent (by weight, dry basis).	Maintaining the 24-hour block average inlet moisture content of the veneer processed at or below of less than or 25 percent AND keeping records of the inlet moisture content of the veneer processed.
(5) Group 1 miscellaneous coating operations.	Use non-HAP coatings as defined in § 63.2292.	Continuing to use non-HAP coatings AND keeping records showing that you are using non-HAP coatings.
(6) Process units and control systems undergoing safety-related shutdown on and after August 13, 2021, except as noted in footnote ''1'' to this table.	Follow documented site-specific procedures to ensure the flow of raw materials and fuel or process heat ceases and that material is removed from the process unit(s) as expeditiously as possible given the system design to reduce air emissions.	Keeping records showing that you are following the work practice requirements during safety-related shutdowns.
(7) Pressurized refiners undergoing start-up or shutdown on and after August 13, 2021, except as noted in footnote ''1'' to this table.	Route exhaust gases from the pressurized refiner to its dryer control system no later than 15 minutes after wood is fed to the pressurized refiner during startup. Stop wood flow into the pressurized refiner no more than 15 minutes after wood fiber and exhaust gases from the pressurized refiner stop being routed to the dryer during shutdown..	Keeping records showing that you are following the work practice requirements during pressurized refiner start-up and shutdown events.

sfrattini on LAPJZKW1R2 with $$_JOB
VerDate Sep<11>2014 09:16 Apr 04, 2023 Jkt 256165 PO 00000 Frm 00356 Fmt 8010 Sfmt 8002 Q:\40\256165.XXX PC31

For . . .	For the following work practice requirements . . .	You must demonstrate continuous compliance by . . .
(8) Direct-fired softwood veneer dryers undergoing startup or shutdown of gas-fired burners on and after August 13, 2021, except as noted in footnote "1" to this table.	Cease feeding green veneer into the softwood veneer dryer and minimize the amount of time direct gas-fired softwood veneer dryers are vented to the atmosphere due to the conditions described in § 63.2250(d).	Keeping records showing that you are following the work practice requirements while undergoing startup or shutdown of softwood veneer dryer direct gas-fired burners.

[1] New or reconstructed affected sources that commenced construction or reconstruction after September 6, 2019 must comply with this requirement beginning on August 13, 2020 or upon initial startup, whichever is later.

[85 FR 49464, Aug. 13, 2020]

TABLE 9 TO SUBPART DDDD OF PART 63—REQUIREMENTS FOR REPORTS

You must submit a(n) . . .	The report must contain . . .	You must submit the report . . .
(1) Compliance report	The information in § 63.2281(c) through (g).	Semiannually according to the requirements in § 63.2281(b).
(2) Immediate startup, shutdown, and malfunction report if you had a startup, shutdown, or malfunction during the reporting period that is not consistent with your SSMP before August 13, 2021.[1]	(i) Actions taken for the event	By fax or telephone within 2 working days after starting actions inconsistent with the plan.
	(ii) The information in § 63.10(d)(5)(ii)	By letter within 7 working days after the end of the event unless you have made alternative arrangements with the permitting authority.
(3) Performance test report	The information required in § 63.7(g)	According to the requirements of § 63.2281(i).
(4) CMS performance evaluation, as required for CEMS under § 63.2269(d)(2).	The information required in § 63.7(g)	According to the requirements of § 63.2281(j).

[1] The requirement for the SSM report in row 2 of this table does not apply for new or reconstructed affected sources that commenced construction or reconstruction after September 6, 2019.

[85 FR 49465, Aug. 13, 2020]

sfrattini on LAPJZKW1R2 with $$_JOB
VerDate Sep<11>2014 09:16 Apr 04, 2023 Jkt 256165 PO 00000 Frm 00357 Fmt 8010 Sfmt 8026 Q:\40\256165.XXX PC31

TABLE 10 TO SUBPART DDDD OF PART 63—APPLICABILITY OF GENERAL PROVISIONS TO THIS SUBPART

Citation	Subject	Brief description	Applies to this subpart before August 13, 2021, except as noted in footnote "1" to this table	Applies to this subpart on and after August 13, 2021, except as noted in footnote "1" to this table
§ 63.1	Applicability	Initial applicability determination; applicability after standard established; permit requirements; extensions, notifications.	Yes	Yes.
§ 63.2	Definitions	Definitions for standards in this part	Yes	Yes.
§ 63.3	Units and Abbreviations	Units and abbreviations for standards in this part	Yes	Yes.
§ 63.4	Prohibited Activities and Circumvention.	Prohibited activities; compliance date; circumvention, fragmentation.	Yes	Yes.
§ 63.5	Preconstruction Review and Notification Requirements.	Preconstruction review requirements of section 112(i)(1).	Yes	Yes.
§ 63.6(a)	Applicability	GP apply unless compliance extension; GP apply to area sources that become major.	Yes	Yes.
§ 63.6(b)(1)–(4)	Compliance Dates for New and Reconstructed Sources.	Standards apply at effective date; 3 years after effective date; upon startup; 10 years after construction or reconstruction commences for section 112(f).	Yes	Yes.
§ 63.6(b)(5)	Notification	Must notify if commenced construction or reconstruction after proposal.	Yes	Yes.
§ 63.6(b)(6)	[Reserved].			
§ 63.6(b)(7)	Compliance Dates for New and Reconstructed Area Sources that Become Major.	Area sources that become major must comply with major source standards immediately upon becoming major, regardless of whether required to comply when they were an area source.	Yes	Yes.
§ 63.6(c)(1)–(2)	Compliance Dates for Existing Sources.	Comply according to date in subpart, which must be no later than 3 years after effective date; for section 112(f) standards, comply within 90 days of effective date unless compliance extension.	Yes	Yes.
§ 63.6(c)(3)–(4)	[Reserved].			
§ 63.6(c)(5)	Compliance Dates for Existing Area Sources that Become Major.	Area sources that become major must comply with major source standards by date indicated in subpart or by equivalent time period (*e.g.,* 3 years).	Yes	Yes.
§ 63.6(d)	[Reserved].			
§ 63.6(e)(1)(i)	General Duty to Minimize Emissions.	You must operate and maintain affected source in a manner consistent with safety and good air pollution control practices for minimizing emissions.	Yes	No, see § 63.2250 for general duty requirement.

sfrattini on LAPJZKW1R2 with $$_JOB
VerDate Sep<11>2014 09:16 Apr 04, 2023 Jkt 256165 PO 00000 Frm 00358 Fmt 8010 Sfmt 8002 Q:\40\256165.XXX PC31

§ 63.6(e)(1)(ii)	Requirement to Correct Malfunctions ASAP.	You must correct malfunctions as soon as practicable after their occurrence.	Yes	No.
§ 63.6(e)(1)(iii)	Operation and Maintenance Requirements.	Operation and maintenance requirements are enforceable independent of emissions limitations or other requirements in relevant standards.	Yes	Yes.
§ 63.6(e)(2)	[Reserved].			
§ 63.6(e)(3)	Startup, Shutdown, and Malfunction Plan (SSMP).	Requirement for SSM and SSMP; content of SSMP.	Yes	No.
§ 63.6(f)(1)	SSM Exemption	You must comply with emission standards at all times except during SSM.	No. See § 63.2250(a)	No.
§ 63.6(f)(2)–(3)	Methods for Determining Compliance/Finding of Compliance.	Compliance based on performance test, operation and maintenance plans, records, inspection.	Yes	Yes.
§ 63.6(g)(1)–(3)	Alternative Standard	Procedures for getting an alternative standard	Yes	Yes.
§ 63.6(h)(1)	SSM Exemption	You must comply with opacity and visible emission standards at all times except during SSM.	NA	No.
§ 63.6(h)(2)–(9)	Opacity/Visible Emission (VE) Standards.	Requirements for opacity and visible emission standards.	NA	NA.
§ 63.6(i)(1)–(14)	Compliance Extension	Procedures and criteria for Administrator to grant compliance extension.	Yes	Yes.
§ 63.6(i)(15)	[Reserved].			
§ 63.6(i)(16)	Compliance Extension	Compliance extension and Administrator's authority.	Yes	Yes.
§ 63.6(j)	Presidential Compliance Exemption.	President may exempt source category from requirement to comply with rule.	Yes	Yes.
§ 63.7(a)(1)–(2)	Performance Test Dates	Dates for conducting initial performance testing and other compliance demonstrations; must conduct 180 days after first subject to rule.	Yes	Yes.
§ 63.7(a)(3)	Section 114 Authority	Administrator may require a performance test under CAA section 114 at any time.	Yes	Yes.
§ 63.7(b)(1)	Notification of Performance Test.	Must notify Administrator 60 days before the test	Yes	Yes.
§ 63.7(b)(2)	Notification of Rescheduling.	If have to reschedule performance test, must notify Administrator as soon as practicable.	Yes	Yes.
§ 63.7(c)	Quality Assurance/Test Plan.	Requirement to submit site-specific test plan 60 days before the test or on date Administrator agrees with; test plan approval procedures; performance audit requirements; internal and external QA procedures for testing.	Yes	Yes.
§ 63.7(d)	Testing Facilities	Requirements for testing facilities	Yes	Yes.

sfrattini on LAPJZKW1R2 with $$_JOB
VerDate Sep<11>2014 09:16 Apr 04, 2023 Jkt 256165 PO 00000 Frm 00359 Fmt 8010 Sfmt 8002 Q:\40\256165.XXX PC31

Citation	Subject	Brief description	Applies to this subpart before August 13, 2021, except as noted in footnote ''1'' to this table	Applies to this subpart on and after August 13, 2021, except as noted in footnote ''1'' to this table
§ 63.7(e)(1)	Performance Testing	Performance tests must be conducted under representative conditions; cannot conduct performance tests during SSM; not a violation to exceed standard during SSM.	Yes	No, see § 63.2262(a)–(b).
§ 63.7(e)(2)	Conditions for Conducting Performance Tests.	Must conduct according to rule and EPA test methods unless Administrator approves alternative.	Yes	Yes.
§ 63.7(e)(3)	Test Run Duration	Must have three test runs for at least the time specified in the relevant standard; compliance is based on arithmetic mean of three runs; specifies conditions when data from an additional test run can be used.	Yes	Yes.
§ 63.7(f)	Alternative Test Method	Procedures by which Administrator can grant approval to use an alternative test method.	Yes	Yes.
§ 63.7(g)	Performance Test Data Analysis.	Must include raw data in performance test report; must submit performance test data 60 days after end of test with the notification of compliance status; keep data for 5 years.	Yes	Yes.
§ 63.7(h)	Waiver of Tests	Procedures for Administrator to waive performance test.	Yes	Yes.
§ 63.8(a)(1)	Applicability of Monitoring Requirements.	Subject to all monitoring requirements in standard	Yes	Yes.
§ 63.8(a)(2)	Performance Specifications.	Performance specifications in appendix B of part 60 of this chapter apply.	Yes	Yes.
§ 63.8(a)(3)	[Reserved].			
§ 63.8(a)(4)	Monitoring with Flares	Requirements for flares in § 63.11 apply	NA	NA.
§ 63.8(b)(1)	Monitoring	Must conduct monitoring according to standard unless Administrator approves alternative.	Yes	Yes.
§ 63.8(b)(2)–(3)	Multiple Effluents and Multiple Monitoring Systems.	Specific requirements for installing monitoring systems; must install on each effluent before it is combined and before it is released to the atmosphere unless Administrator approves otherwise; if more than one monitoring system on an emission point, must report all monitoring system results, unless one monitoring system is a backup.	Yes	Yes.
§ 63.8(c)(1)	Monitoring System Operation and Maintenance.	Maintain monitoring system in a manner consistent with and good air pollution control practices.	Yes	Yes.

sfrattini on LAPJZKW1R2 with $$_JOB
VerDate Sep<11>2014 09:16 Apr 04, 2023 Jkt 256165 PO 00000 Frm 00360 Fmt 8010 Sfmt 8002 Q:\40\256165.XXX PC31

§ 63.8(c)(1)(i)	Operation and Maintenance of CMS.	Must maintain and operate CMS in accordance with § 63.6(e)(1).	Yes	No.
§ 63.8(c)(1)(ii)	Spare Parts for CMS	Must maintain spare parts for routine CMS repairs	Yes	Yes.
§ 63.8(c)(1)(iii)	Requirements to Develop SSMP for CMS.	Must develop and implement SSMP for CMS	Yes	No.
§ 63.8(c)(2)–(3)	Monitoring System Installation.	Must install to get representative emission of parameter measurements; must verify operational status before or at performance test.	Yes	Yes.
§ 63.8(c)(4)	CMS Requirements	CMS must be operating except during breakdown, out-of-control, repair, maintenance, and high-level calibration drifts; COMS must have a minimum of one cycle of sampling and analysis for each successive 10-second period and one cycle of data recording for each successive 6-minute period; CEMS must have a minimum of one cycle of operation for each successive 15-minute period.	Yes	Yes.
§ 63.8(c)(5)	Continuous Opacity Monitoring System (COMS) Minimum Procedures.	COMS minimum procedures	NA	NA.
§ 63.8(c)(6)–(8)	CMS Requirements	Zero and high-level calibration check requirements; out-of-control periods.	Yes	Yes.
§ 63.8(d)(1)–(2)	CMS Quality Control	Requirements for CMS quality control, including calibration, etc..	Yes. Refer to § 63.2269(a)–(c) for CPMS quality control procedures to be included in the quality control program.	Yes. Refer to § 63.2269(a)–(c) for CPMS quality control procedures to be included in the quality control program.
§ 63.8(d)(3)	Written Procedures for CMS.	Must keep quality control plan on record for 5 years. Keep old versions for 5 years after revisions. May incorporate as part of SSMP to avoid duplication..	Yes	No, see § 63.2282(f).
§ 63.8(e)	CMS Performance Evaluation.	Notification, performance evaluation test plan, reports.	Yes, for CEMS	Yes, for CEMS.
§ 63.8(f)(1)–(5)	Alternative Monitoring Method.	Procedures for Administrator to approve alternative monitoring.	Yes	Yes.
§ 63.8(f)(6)	Alternative to Relative Accuracy Test.	Procedures for Administrator to approve alternative relative accuracy tests for CEMS.	Yes, for CEMS	Yes, for CEMS.

sfrattini on LAPJZKW1R2 with $$_JOB
VerDate Sep<11>2014 09:16 Apr 04, 2023 Jkt 256165 PO 00000 Frm 00361 Fmt 8010 Sfmt 8002 Q:\40\256165.XXX PC31

Citation	Subject	Brief description	Applies to this subpart before August 13, 2021, except as noted in footnote ''1'' to this table	Applies to this subpart on and after August 13, 2021, except as noted in footnote ''1'' to this table
§ 63.8(g)	Data Reduction	COMS 6-minute averages calculated over at least 36 evenly spaced data points; CEMS 1 hour averages computed over at least 4 equally spaced data points; data that can't be used in average; rounding of data.	Yes	Yes.
§ 63.9(a)	Notification Requirements.	Applicability and State delegation	Yes	Yes.
§ 63.9(b)(1)–(2)	Initial Notifications	Submit notification 120 days after effective date; contents of notification.	Yes	Yes.
§ 63.9(b)(3)	[Reserved].			
§ 63.9(b)(4)–(5)	Initial Notifications	Submit notification 120 days after effective date; notification of intent to construct/reconstruct; notification of commencement of construct/reconstruct; notification of startup; contents of each.	Yes	Yes.
§ 63.9(c)	Request for Compliance Extension.	Can request if cannot comply by date or if installed best available control technology/lowest achievable emission rate.	Yes	Yes.
§ 63.9(d)	Notification of Special Compliance Requirements for New Source.	For sources that commence construction between proposal and promulgation and want to comply 3 years after effective date.	Yes	Yes.
§ 63.9(e)	Notification of Performance Test.	Notify EPA Administrator 60 days prior	Yes	Yes.
§ 63.9(f)	Notification of Visible Emissions/Opacity Test.	Notify EPA Administrator 30 days prior	No	No.
§ 63.9(g)	Additional Notifications When Using CMS.	Notification of performance evaluation; notification using COMS data; notification that exceeded criterion for relative accuracy.	Yes	Yes.
§ 63.9(h)(1)–(6)	Notification of Compliance Status.	Contents; due 60 days after end of performance test or other compliance demonstration, except for opacity/VE, which are due 30 days after; when to submit to Federal vs. State authority.	Yes	Yes.
§ 63.9(i)	Adjustment of Submittal Deadlines.	Procedures for Administrator to approve change in when notifications must be submitted.	Yes	Yes.
§ 63.9(j)	Change in Previous Information.	Must submit within 15 days after the change	Yes	Yes.
§ 63.9(k)	Electronic reporting procedures.	Electronic reporting procedures	Yes, only as specified in § 63.9(j).	Yes, only as specified in § 63.9(j).

sfrattini on LAPJZKW1R2 with $$_JOB
VerDate Sep<11>2014 09:16 Apr 04, 2023 Jkt 256165 PO 00000 Frm 00362 Fmt 8010 Sfmt 8002 Q:\40\256165.XXX PC31

§ 63.10(a)	Recordkeeping/Reporting	Applies to all, unless compliance extension; when to submit to Federal vs. State authority; procedures for owners of more than one source.	Yes	Yes.
§ 63.10(b)(1)	Recordkeeping/Reporting	General Requirements; keep all records readily available; keep for 5 years.	Yes	Yes.
§ 63.10(b)(2)(i)	Recordkeeping of Occurrence and Duration of Startups and Shutdowns.	Records of occurrence and duration of each startup or shutdown that causes source to exceed emission limitation.	Yes	No, see § 63.2282(a).
§ 63.10(b)(2)(ii)	Recordkeeping of Failures to Meet a Standard.	Records of occurrence and duration of each malfunction of operation or air pollution control and monitoring equipment.	Yes	No, see § 63.2282(a) for recordkeeping of (1) date, time and duration; (2) listing of affected source or equipment, and an estimate of the quantity of each regulated pollutant emitted over the standard; and (3) actions to minimize emissions and correct the failure.
§ 63.10(b)(2)(iii)	Maintenance Records	Records of maintenance performed on air pollution control and monitoring equipment.	Yes	Yes.
§ 63.10(b)(2)(iv)–(v)	Actions Taken to Minimize Emissions During SSM.	Records of actions taken during SSM to minimize emissions.	Yes	No.
§ 63.10(b)(2)(vi) and (x)–(xi).	CMS Records	Malfunctions, inoperative, out-of-control	Yes	Yes.
§ 63.10(b)(2)(vii)–(ix)	Records	Measurements to demonstrate compliance with compliance options and operating requirements; performance test, performance evaluation, and visible emission observation results; measurements to determine conditions of performance tests and performance evaluations.	Yes	Yes.
§ 63.10(b)(2)(xii)	Records	Records when under waiver	Yes	Yes.
§ 63.10(b)(2)(xiii)	Records	Records when using alternative to relative accuracy test.	Yes	Yes.
§ 63.10(b)(2)(xiv)	Records	All documentation supporting initial notification and notification of compliance status.	Yes	Yes.
§ 63.10(b)(3)	Records	Applicability determinations	Yes	Yes.
§ 63.10(c)(1)–(6), (9)–(14)	Records	Additional records for CMS	Yes	Yes.

sfrattini on LAPJZKW1R2 with $$_JOB

VerDate Sep<11>2014 09:16 Apr 04, 2023 Jkt 256165 PO 00000 Frm 00363 Fmt 8010 Sfmt 8002 Q:\40\256165.XXX PC31

Citation	Subject	Brief description	Applies to this subpart before August 13, 2021, except as noted in footnote ''1'' to this table	Applies to this subpart on and after August 13, 2021, except as noted in footnote ''1'' to this table
§ 63.10(c)(7)–(8)	Records	Records of excess emissions and parameter monitoring exceedances for CMS.	No	No.
§ 63.10(c)(15)	Use of SSMP	Use SSMP to satisfy recordkeeping requirements for identification of malfunction, correction action taken, and nature of repairs to CMS.	Yes	No.
§ 63.10(d)(1)	General Reporting Requirements.	Requirement to report	Yes	Yes.
§ 63.10(d)(2)	Report of Performance Test Results.	When to submit to Federal or State authority	Yes	Yes.
§ 63.10(d)(3)	Reporting Opacity or VE Observations.	What to report and when	NA	NA.
§ 63.10(d)(4)	Progress Reports	Must submit progress reports on schedule if under compliance extension.	Yes	Yes.
§ 63.10(d)(5)(i)	Periodic SSM Reports	Contents and submission of periodic SSM reports	Yes	No, see § 63.2281(d)–(e) for malfunction reporting requirements.
§ 63.10(d)(5)(ii)	Immediate SSM Reports	Contents and submission of immediate SSM reports.	Yes	No.
§ 63.10(e)(1)–(2)	Additional CMS Reports	Must report results for each CEM on a unit; written copy of performance evaluation; 3 copies of COMS performance evaluation.	Yes	Yes.
§ 63.10(e)(3)	Reports	Excess emission reports	No	No.
§ 63.10(e)(4)	Reporting COMS Data	Must submit COMS data with performance test data.	NA	NA.
§ 63.10(f)	Waiver for Recordkeeping/Reporting.	Procedures for EPA Administrator to waive	Yes	Yes.
§ 63.11	Control Device and Work Practice Requirements.	Requirements for flares and alternative work practice for equipment leaks.	NA	NA.
§ 63.12	State Authority and Delegations.	State authority to enforce standards	Yes	Yes.
§ 63.13	Addresses	Addresses where reports, notifications, and requests are sent.	Yes	Yes.
§ 63.14	Incorporations by Reference.	Test methods incorporated by reference	Yes	Yes.
§ 63.15	Availability of Information and Confidentiality.	Public and confidential information	Yes	Yes.

sfrattini on LAPJZKW1R2 with $$_JOB
VerDate Sep<11>2014 09:16 Apr 04, 2023 Jkt 256165 PO 00000 Frm 00364 Fmt 8010 Sfmt 8002 Q:\40\256165.XXX PC31

§ 63.16	Performance Track Provisions.	Requirements for Performance Track member facilities.	Yes	Yes.

[1] New or reconstructed affected sources that commenced construction or reconstruction after September 6, 2019 must comply with the requirements in column 5 of this table beginning on August 13, 2020 or upon initial startup, whichever is later.

[85 FR 49465, Aug. 13, 2020, as amended at 85 FR 73902, Nov. 19, 2020]

sfrattini on LAPJZKW1R2 with $$_JOB

VerDate Sep<11>2014 09:16 Apr 04, 2023 Jkt 256165 PO 00000 Frm 00365 Fmt 8010 Sfmt 8027 Q:\40\256165.XXX PC31

APPENDIX A TO SUBPART DDDD OF PART 63—ALTERNATIVE PROCEDURE TO DETERMINE CAPTURE EFFICIENCY FROM ENCLOSURES AROUND HOT PRESSES IN THE PLYWOOD AND COMPOSITE WOOD PRODUCTS INDUSTRY USING SULFUR HEXAFLUORIDE TRACER GAS

1.0 SCOPE AND APPLICATION

This procedure has been developed specifically for the rule for the plywood and composite wood products (PCWP) industry and is used to determine the capture efficiency of a partial hot press enclosure in that industry. This procedure is applicable for the determination of capture efficiency for enclosures around hot presses and is an alternative to the construction of temporary total enclosures (TTE). Sulfur hexafluoride (SF_6) is used as a tracer gas (other tracer gases may be used if approved by the EPA Administrator). This gas is not indigenous to the ambient atmosphere and is nonreactive.

This procedure uses infrared spectrometry (IR) as the analytical technique. When the infrared spectrometer used is a Fourier-Transform Infrared spectrometer (FTIR), an alternate instrument calibration procedure may be used; the alternate calibration procedure is the calibration transfer standard (CTS) procedure of EPA Method 320 (appendix A to 40 CFR part 63). Other analytical techniques which are capable of equivalent Method Performance (Section 13.0) also may be used. Specifically, gas chromatography with electron capture detection (GC/ECD) is an applicable technique for analysis of SF_6.

2.0 SUMMARY OF METHOD

A constant mass flow rate of SF_6 tracer gas is released through manifolds at multiple locations within the enclosure to mimic the release of hazardous air pollutants during the press process. This test method requires a minimum of three SF_6 injection points (two at the press unloader and one at the press) and provides details about considerations for locating the injection points. A GC/ECD is used to measure the concentration of SF_6 at the inlet duct to the control device (outlet duct from enclosure). Simultaneously, EPA Method 2 (appendix A to 40 CFR part 60) is used to measure the flow rate at the inlet duct to the control device. The concentration and flow rate measurements are used to calculate the mass emission rate of SF_6 at the control device inlet. Through calculation of the mass of SF_6 released through the manifolds and the mass of SF_6 measured at the inlet to the control device, the capture efficiency of the enclosure is calculated.

In addition, optional samples of the ambient air may be taken at locations around the perimeter of the enclosure to quantify the ambient concentration of SF_6 and to identify those areas of the enclosure that may be performing less efficiently; these samples would be taken using disposable syringes and would be analyzed using a GC/ECD.

Finally, in addition to the requirements specified in this procedure, the data quality objectives (DQO) or lower confidence limit (LCL) criteria specified in appendix A to 40 CFR part 63, subpart KK, Data Quality Objective and Lower Confidence Limit Approaches for Alternative Capture Efficiency Protocols and Test Methods, must also be satisfied. A minimum of three test runs are required for this procedure; however, additional test runs may be required based on the results of the DQO or LCL analysis.

3.0 DEFINITIONS

3.1 Capture efficiency (CE). The weight per unit time of SF_6 entering the control device divided by the weight per unit time of SF_6 released through manifolds at multiple locations within the enclosure.

3.2 Control device (CD). The equipment used to reduce, by destruction or removal, press exhaust air pollutants prior to discharge to the ambient air.

3.3 Control/destruction efficiency (DE). The volatile organic compound or HAP removal efficiency of the control device.

3.4 Data Quality Objective (DQO) Approach. A statistical procedure to determine the precision of the data from a test series and to qualify the data in the determination of capture efficiency for compliance purposes. If the results of the DQO analysis of the initial three test runs do not satisfy the DQO criterion, the LCL approach can be used or additional test runs must be conducted. If additional test runs are conducted, then the DQO or LCL analysis is conducted using the data from both the initial test runs and all additional test runs.

3.5 Lower Confidence Limit (LCL) Approach. An alternative statistical procedure that can be used to qualify data in the determination of capture efficiency for compliance purposes. If the results of the LCL approach produce a CE that is too low for demonstrating compliance, then additional test runs must be conducted until the LCL or DQO is met. As with the DQO, data from all valid test runs must be used in the calculation.

3.6 Minimum Measurement Level (MML). The minimum tracer gas concentration expected to be measured during the test series. This value is selected by the tester based on the capabilities of the IR spectrometer (or GC/ECD) and the other known or measured parameters of the hot press enclosure to be tested. The selected MML must be above the low-level calibration standard and preferably below the mid-level calibration standard.

sfrattini on LAPJZKW1R2 with $$_JOB
VerDate Sep<11>2014 09:16 Apr 04, 2023 Jkt 256165 PO 00000 Frm 00366 Fmt 8010 Sfmt 8002 Q:\40\256165.XXX PC31

3.7 Method 204. The U.S. EPA Method 204, ''Criteria For and Verification of a Permanent or Temporary Total Enclosure'' (40 CFR part 51, appendix M).

3.8 Method 205. The U.S. EPA Method 205, ''Verification of Gas Dilution Systems for Field Instrument Calibrations'' (40 CFR part 51, appendix M).

3.9 Method 320. The U.S. EPA Method 320, ''Measurement of Vapor Phase Organic and Inorganic Emissions by Extractive Fourier Transform Infrared (FTIR) Spectroscopy'' (40 CFR part 63, appendix A).

3.10 Overall capture and control efficiency (CCE). The collection and control/destruction efficiency of both the PPE and CD combined. The CCE is calculated as the product of the CE and DE.

3.11 Partial press enclosure (PPE). The physical barrier that ''partially'' encloses the press equipment, captures a significant amount of the associated emissions, and transports those emissions to the CD.

3.12 Test series. A minimum of three test runs or, when more than three runs are conducted, all of the test runs conducted.

4.0 Interferences

There are no known interferences.

5.0 Safety

Sulfur hexafluoride is a colorless, odorless, nonflammable liquefied gas. It is stable and nonreactive and, because it is noncorrosive, most structural materials are compatible with it. The Occupational Safety and Health Administration Permissible Emission Limit-Time Weighted Average (PEL-TWA) and Threshold Limit Value-Time Weighted Average (TLV-TWA) concentrations are 1,000 parts per million. Sulfur hexafluoride is an asphyxiant. Exposure to an oxygen-deficient atmosphere (less than 19.5 percent oxygen) may cause dizziness, drowsiness, nausea, vomiting, excess salivation, diminished mental alertness, loss of consciousness, and death. Exposure to atmospheres containing less than 12 percent oxygen will bring about unconsciousness without warning and so quickly that the individuals cannot help themselves. Contact with liquid or cold vapor may cause frostbite. Avoid breathing sulfur hexafluoride gas. Self-contained breathing apparatus may be required by rescue workers. Sulfur hexafluoride is not listed as a carcinogen or a potential carcinogen.

6.0 Equipment and Supplies

This method requires equipment and supplies for: (a) the injection of tracer gas into the enclosure, (b) the measurement of the tracer gas concentration in the exhaust gas entering the control device, and (c) the measurement of the volumetric flow rate of the exhaust gas entering the control device. In addition, the requisite equipment needed for EPA Methods 1–4 in appendix A to 40 CFR part 60 will be required. Equipment and supplies for optional ambient air sampling are discussed in Section 8.6.

6.1 Tracer Gas Injection.

6.1.1 Manifolds. This method requires the use of tracer gas supply cylinder(s) along with the appropriate flow control elements. Figure 1 shows a schematic drawing of the injection system showing potential locations for the tracer gas manifolds. Figure 2 shows a schematic drawing of the recommended configuration of the injection manifold. Three tracer gas discharge manifolds are required at a minimum.

6.1.2 Flow Control Meter. Flow control and measurement meter for measuring the quantity of tracer gas injected. A mass flow, volumetric flow, or critical orifice control meter can be used for this method. The meter must be accurate to within ±5 percent at the flow rate used. This means that the flow meter must be calibrated against a primary standard for flow measurement at the appropriate flow rate.

6.2 Measurement of Tracer Gas Concentration.

6.2.1 Sampling Probes. Use Pyrex or stainless steel sampling probes of sufficient length to reach the traverse points calculated according to EPA Method 1 (appendix A to 40 CFR part 60).

6.2.2 Sampling Line. Use a heated Teflon sampling line to transport the sample to the analytical instrument.

6.2.3 Sampling Pump. Use a sampling pump capable of extracting sufficient sample from the duct and transporting to the analytical instrument.

6.2.4 Sample Conditioning System. Use a particulate filter sufficient to protect the sampling pump and analytical instrument. At the discretion of the tester and depending on the equipment used and the moisture content of the exhaust gas, it may be necessary to further condition the sample by removing moisture using a condenser.

6.2.5 Analytical Instrument. Use one of the following analytical instruments.

6.2.5.1 Spectrometer. Use an infrared spectrometer designed to measuring SF_6 tracer gas and capable of meeting or exceeding the specifications of this procedure. An FTIR meeting the specifications of Method 320 in appendix A to 40 CFR part 63 may be used.

6.2.5.2 GC/ECD. Use a GC/ECD designed to measure SF_6 tracer gas and capable of meeting or exceeding the specifications of this procedure.

6.2.6 Recorder. At a minimum, use a recorder with linear strip chart. An automated data acquisition system (DAS) is recommended.

6.3 Exhaust Gas Flow Rate Measurement. Use equipment specified for EPA Methods 2, 3, and 4 in appendix A to 40 CFR part 60 for

sfrattini on LAPJZKW1R2 with $$_JOB
VerDate Sep<11>2014 09:16 Apr 04, 2023 Jkt 256165 PO 00000 Frm 00367 Fmt 8010 Sfmt 8002 Q:\40\256165.XXX PC31

measuring flow rate of exhaust gas at the inlet to the control device.

7.0 REAGENTS AND STANDARDS

7.1 Tracer Gas. Use SF_6 as the tracer gas. The manufacturer of the SF_6 tracer gas should provide a recommended shelf life for the tracer gas cylinder over which the concentration does not change more than ±2 percent from the certified value. A gas mixture of SF_6 diluted with nitrogen should be used; based on experience and calculations, pure SF_6 gas is not necessary to conduct tracer gas testing. Select a concentration and flow rate that is appropriate for the analytical instrument's detection limit, the MML, and the exhaust gas flow rate from the enclosure (see section 8.1.1). You may use a tracer gas other than SF_6 with the prior approval of the EPA Administrator. If you use an approved tracer gas other than SF_6, all references to SF_6 in this protocol instead refer to the approved tracer gas.

7.2 Calibration Gases. The SF_6 calibration gases required will be dependent on the selected MML and the appropriate span selected for the test. Commercial cylinder gases certified by the manufacturer to be accurate to within 1 percent of the certified label value are preferable, although cylinder gases certified by the manufacturer to 2 percent accuracy are allowed. Additionally, the manufacturer of the SF_6 calibration gases should provide a recommended shelf life for each calibration gas cylinder over which the concentration does not change more than ±2 percent from the certified value. Another option allowed by this method is for the tester to obtain high concentration certified cylinder gases and then use a dilution system meeting the requirements of EPA Method 205, 40 CFR part 51, appendix M, to make multi-level calibration gas standards. Low-level, mid-level, and high-level calibration gases will be required. The MML must be above the low-level standard, the high-level standard must be no more than four times the low-level standard, and the mid-level standard must be approximately halfway between the high- and low-level standards. See section 12.1 for an example calculation of this procedure.

NOTE: If using an FTIR as the analytical instrument, the tester has the option of following the CTS procedures of Method 320 in appendix A to 40 CFR part 63; the calibration standards (and procedures) specified in Method 320 may be used in lieu of the calibration standards and procedures in this protocol.

7.2.1 Zero Gas. High purity nitrogen.

7.2.2 Low-Level Calibration Gas. An SF_6 calibration gas in nitrogen with a concentration equivalent to 20 to 30 percent of the applicable span value.

7.2.3 Mid-Level Calibration Gas. An SF_6 calibration gas in nitrogen with a concentration equivalent to 45 to 55 percent of the applicable span value.

7.2.4 High-Level Calibration Gas. An SF_6 calibration gas in nitrogen with a concentration equivalent to 80 to 90 percent of the applicable span value.

8.0 SAMPLE COLLECTION, PRESERVATION, STORAGE, AND TRANSPORT

8.1 Test Design.

8.1.1 Determination of Minimum Tracer Gas Flow Rate.

8.1.1.1 Determine (via design calculations or measurements) the approximate flow rate of the exhaust gas through the enclosure, actual cubic feet per minute (acfm).

8.1.1.2 Calculate the minimum tracer gas injection rate necessary to assure a detectable SF_6 concentration at the exhaust gas measurement point (see section 12.1 for calculation).

8.1.1.3 Select a flow meter for the injection system with an operating range appropriate for the injection rate selected.

8.1.2 Determination of the Approximate Time to Reach Equilibrium.

8.1.2.1 Determine the volume of the enclosure.

8.1.2.2 Calculate the air changes per minute of the enclosure by dividing the approximate exhaust flow rate (8.1.1.1 above) by the enclosed volume (8.1.2.1 above).

8.1.2.3 Calculate the time at which the tracer concentration in the enclosure will achieve approximate equilibrium. Divide 3 by the air changes per minute (8.1.2.2 above) to establish this time. This is the approximate length of time for the system to come to equilibrium. Concentration equilibrium occurs when the tracer concentration in the enclosure stops changing as a function of time for a constant tracer release rate. Because the press is continuously cycling, equilibrium may be exhibited by a repeating, but stable, cyclic pattern rather than a single constant concentration value. Assure sufficient tracer gas is available to allow the system to come to equilibrium, and to sample for a minimum of 20 minutes and repeat the procedure for a minimum of three test runs. Additional test runs may be required based on the results of the DQO and LCL analyses described in 40 CFR part 63, subpart KK, appendix A.

8.1.3 Location of Injection Points. This method requires a minimum of three tracer gas injection points. The injection points should be located within leak prone, volatile organic compound/hazardous air pollutant (VOC/HAP) producing areas around the press, or horizontally within 12 inches of the defined equipment. One potential configuration of the injection points is depicted in Figure 1. The effect of wind, exfiltration through the building envelope, and air flowing through open building doors should be considered when locating tracer gas injection

sfrattini on LAPJZKW1R2 with $$_JOB
VerDate Sep<11>2014 09:16 Apr 04, 2023 Jkt 256165 PO 00000 Frm 00368 Fmt 8010 Sfmt 8002 Q:\40\256165.XXX PC31

points within the enclosure. The injection points should also be located at a vertical elevation equal to the VOC/HAP generating zones. The injection points should not be located beneath obstructions that would prevent a natural dispersion of the gas. Document the selected injection points in a drawing(s).

8.1.4 Location of Flow Measurement and Tracer Sampling. Accurate CD inlet gas flow rate measurements are critical to the success of this procedure. Select a measurement location meeting the criteria of EPA Method 1 (40 CFR part 60, appendix A), Sampling and Velocity Traverses for Stationary Sources. Also, when selecting the measurement location, consider whether stratification of the tracer gas is likely at the location (*e.g.*, do not select a location immediately after a point of air in-leakage to the duct).

8.2 Tracer Gas Release. Release the tracer gas at a calculated flow rate (see section 12.1 for calculation) through a minimum of three injection manifolds located as described above in 8.1.3. The tracer gas delivery lines must be routed into the enclosure and attached to the manifolds without violating the integrity of the enclosure.

8.3 Pretest Measurements.

8.3.1 Location of Sampling Point(s). If stratification is not suspected at the measurement location, select a single sample point located at the centroid of the CD inlet duct or at a point no closer to the CD inlet duct walls than 1 meter. If stratification is suspected, establish a ''measurement line'' that passes through the centroidal area and in the direction of any expected stratification. Locate three traverse points at 16.7, 50.0 and 83.3 percent of the measurement line and sample from each of these three points during each run, or follow the procedure in section 8.3.2 to verify whether stratification does or does not exist.

8.3.2 Stratification Verification. The presence or absence of stratification can be verified by using the following procedure. While the facility is operating normally, initiate tracer gas release into the enclosure. For rectangular ducts, locate at least nine sample points in the cross section such that the sample points are the centroids of similarly-shaped, equal area divisions of the cross section. Measure the tracer gas concentration at each point. Calculate the mean value for all sample points. For circular ducts, conduct a 12-point traverse (*i.e.*, six points on each of the two perpendicular diameters) locating the sample points as described in 40 CFR part 60, appendix A, Method 1. Perform the measurements and calculations as described above. Determine if the mean pollutant concentration is more than 10 percent different from any single point. If so, the cross section is considered to be stratified, and the tester may not use a single sample point location, but must use the three traverse points at 16.7, 50.0, and 83.3 percent of the entire measurement line. Other traverse points may be selected, provided that they can be shown to the satisfaction of the Administrator to provide a representative sample over the stack or duct cross section.

8.4 CD Inlet Gas Flow Rate Measurements. The procedures of EPA Methods 1–4 (40 CFR part 60, appendix A) are used to determine the CD inlet gas flow rate. Molecular weight (Method 3) and moisture (Method 4) determinations are only required once for each test series. However, if the test series is not completed within 24 hours, then the molecular weight and moisture measurements should be repeated daily. As a minimum, velocity measurements are conducted according to the procedures of Methods 1 and 2 before and after each test run, as close to the start and end of the run as practicable. A velocity measurement between two runs satisfies both the criterion of ''after'' the run just completed and ''before'' the run to be initiated. Accurate exhaust gas flow rate measurements are critical to the success of this procedure. If significant temporal variations of flow rate are anticipated during the test run under normal process operating conditions, take appropriate steps to accurately measure the flow rate during the test. Examples of steps that might be taken include: (1) conducting additional velocity traverses during the test run; or (2) continuously monitoring a single point of average velocity during the run and using these data, in conjunction with the pre- and post-test traverses, to calculate an average velocity for the test run.

8.5 Tracer Gas Measurement Procedure.

8.5.1 Calibration Error Test. Immediately prior to the emission test (within 2 hours of the start of the test), introduce zero gas and high-level calibration gas at the calibration valve assembly. Zero and calibrate the analyzer according to the manufacturer's procedures using, respectively, nitrogen and the calibration gases. Calculate the predicted response for the low-level and mid-level gases based on a linear response line between the zero and high-level response. Then introduce the low-level and mid-level calibration gases successively to the measurement system. Record the analyzer responses for the low-level and mid-level calibration gases and determine the differences between the measurement system responses and the predicted responses using the equation in section 12.3. These differences must be less than 5 percent of the respective calibration gas value. If not, the measurement system must be replaced or repaired prior to testing. No adjustments to the measurement system shall be conducted after the calibration and before the drift determination (section 8.5.4). If adjustments are necessary before the completion of the test series, perform the drift

sfrattini on LAPJZKW1R2 with $$_JOB
VerDate Sep<11>2014 09:16 Apr 04, 2023 Jkt 256165 PO 00000 Frm 00369 Fmt 8010 Sfmt 8002 Q:\40\256165.XXX PC31

checks prior to the required adjustments and repeat the calibration following the adjustments. If multiple electronic ranges are to be used, each additional range must be checked with a mid-level calibration gas to verify the multiplication factor.

NOTE: If using an FTIR for the analytical instrument, you may choose to follow the pretest preparation, evaluation, and calibration procedures of Method 320 (section 8.0) (40 CFR part 63, appendix A) in lieu of the above procedure.

8.5.2 Response Time Test. Conduct this test once prior to each test series. Introduce zero gas into the measurement system at the calibration valve assembly. When the system output has stabilized, switch quickly to the high-level calibration gas. Record the time from the concentration change to the measurement system response equivalent to 95 percent of the step change. Repeat the test three times and average the results.

8.5.3 SF_6 Measurement. Sampling of the enclosure exhaust gas at the inlet to the CD should begin at the onset of tracer gas release. If necessary, adjust the tracer gas injection rate such that the measured tracer gas concentration at the CD inlet is within the spectrometer's calibration range (*i.e.*, between the MML and the span value). Once the tracer gas concentration reaches equilibrium, the SF_6 concentration should be measured using the infrared spectrometer continuously for at least 20 minutes per run. Continuously record (*i.e.*, record at least once per minute) the concentration. Conduct at least three test runs. On the recording chart, in the data acquisition system, or in a log book, make a note of periods of process interruption or cyclic operation such as the cycles of the hot press operation. Table 1 to this appendix summarizes the physical measurements required for the enclosure testing.

NOTE: If a GC/ECD is used as the analytical instrument, a continuous record (at least once per minute) likely will not be possible; make a minimum of five injections during each test run. Also, the minimum test run duration criterion of 20 minutes applies.

8.5.4 Drift Determination. Immediately following the completion of the test run, reintroduce the zero and mid-level calibration gases, one at a time, to the measurement system at the calibration valve assembly. (Make no adjustments to the measurement system until both the zero and calibration drift checks are made.) Record the analyzer responses for the zero and mid-level calibration gases and determine the difference between the instrument responses for each gas prior to and after the emission test run using the equation in section 12.4. If the drift values exceed the specified limits (section 13), invalidate the test results preceding the check and repeat the test following corrections to the measurement system. Alternatively, recalibrate the test measurement system as in section 8.5.1 and report the results using both sets of calibration data (*i.e.*, data determined prior to the test period and data determined following the test period). Note: If using an FTIR for the analytical instrument, you may choose to follow the post-test calibration procedures of Method 320 in appendix A to 40 CFR part 63 (section 8.11.2) in lieu of the above procedures.

8.6 Ambient Air Sampling (Optional). Sampling the ambient air surrounding the enclosure is optional. However, taking these samples during the capture efficiency testing will identify those areas of the enclosure that may be performing less efficiently.

8.6.1 Location of Ambient Samples Outside the Enclosure (Optional). In selecting the sampling locations for collecting samples of the ambient air surrounding the enclosure, consider potential leak points, the direction of the release, and laminar flow characteristics in the area surrounding the enclosure. Samples should be collected from all sides of the enclosure, downstream in the prevailing room air flow, and in the operating personnel occupancy areas.

8.6.2 Collection of Ambient Samples (Optional). During the tracer gas release, collect ambient samples from the area surrounding the enclosure perimeter at predetermined location using disposable syringes or some other type of containers that are non-absorbent, inert, and that have low permeability (*i.e.*, polyvinyl fluoride film or polyester film sample bags or polyethylene, polypropylene, nylon or glass bottles). The use of disposable syringes allows samples to be injected directly into a gas chromatograph. Concentration measurements taken around the perimeter of the enclosure provide evidence of capture performance and will assist in the identification of those areas of the enclosure that are performing less efficiently.

8.6.3 Analysis and Storage of Ambient Samples (Optional). Analyze the ambient samples using an analytical instrument calibrated and operated according to the procedures in this appendix or ASTM E 260 and ASTM E 697. Samples may be analyzed immediately after a sample is taken, or they may be stored for future analysis. Experience has shown no degradation of concentration in polypropylene syringes when stored for several months as long as the needle or syringe is plugged. Polypropylene syringes should be discarded after one use to eliminate the possibility of cross contamination of samples.

9.0 QUALITY CONTROL

9.1 Sampling, System Leak Check. A sampling system leak check should be conducted prior to and after each test run to ensure the integrity of the sampling system.

9.2 Zero and Calibration Drift Tests.

sfrattini on LAPJZKW1R2 with $$_JOB
VerDate Sep<11>2014 09:16 Apr 04, 2023 Jkt 256165 PO 00000 Frm 00370 Fmt 8010 Sfmt 8002 Q:\40\256165.XXX PC31

Section	Quality control measure	Effect
8.5.4	Zero and calibration drift tests	Ensures that bias introduced by drift in the measurement system output during the run is no greater than 3 percent of span.

10.0 CALIBRATION AND STANDARDIZATION

10.1 Control Device Inlet Air Flow Rate Measurement Equipment. Follow the equipment calibration requirements specified in Methods 2, 3, and 4 (appendix A to 40 CFR part 60) for measuring the velocity, molecular weight, and moisture of the control device inlet air.

10.2 Tracer Gas Injection Rate. A dry gas volume flow meter, mass flow meter, or orifice can be used to measure the tracer gas injection flow rate. The selected flow measurement device must have an accuracy of greater than ±5 percent at the field operating range. Prior to the test, verify the calibration of the selected flow measurement device using either a wet test meter, spirometer, or liquid displacement meter as the calibration device. Select a minimum of two flow rates to bracket the expected field operating range of the flow meter. Conduct three calibration runs at each of the two selected flow rates. For each run, note the exact quantity of gas as determined by the calibration standard and the gas volume indicated by the flow meter. For each flow rate, calculate the average percent difference of the indicated flow compared to the calibration standard.

10.3 Spectrometer. Follow the calibration requirements specified by the equipment manufacturer for infrared spectrometer measurements and conduct the pretest calibration error test specified in section 8.5.1. Note: if using an FTIR analytical instrument see Method 320, section 10 (appendix A to 40 CFR part 63).

10.4 Gas Chromatograph. Follow the pretest calibration requirements specified in section 8.5.1.

10.5 Gas Chromatograph for Ambient Sampling (Optional). For the optional ambient sampling, follow the calibration requirements specified in section 8.5.1 or ASTM E 260 and E 697 and by the equipment manufacturer for gas chromatograph measurements.

11.0 ANALYTICAL PROCEDURES

The sample collection and analysis are concurrent for this method (see section 8.0).

12.0 CALCULATIONS AND DATA ANALYSIS

12.1 Estimate MML and Span. The MML is the minimum measurement level. The selection of this level is at the discretion of the tester. However, the MML must be higher than the low-level calibration standard, and the tester must be able to measure at this level with a precision of ≤10 percent. As an example, select the MML as 10 times the instrument's published detection limit. The detection limit of one instrument is 0.01 parts per million by volume (ppmv). Therefore, the MML would be 0.10 ppmv. Select the low-level calibration standard as 0.08 ppmv. The high-level standard would be four times the low-level standard or 0.32 ppmv. A reasonable mid-level standard would then be 0.20 ppmv (halfway between the low-level standard and the high-level standard). Finally, the span value would be approximately 0.40 ppmv (the high-level value is 80 percent of the span). In this example, the following MML, calibration standards, and span values would apply:

MML = 0.10 ppmv
Low-level standard = 0.08 ppmv
Mid-level standard = 0.20 ppmv
High-level standard = 0.32 ppmv
Span value = 0.40 ppmv

12.2 Estimate Tracer Gas Injection Rate for the Given Span. To estimate the minimum and maximum tracer gas injection rate, assume a worst case capture efficiency of 80 percent, and calculate the tracer gas flow rate based on known or measured parameters. To estimate the minimum tracer gas injection rate, assume that the MML concentration (10 times the IR detection limit in this example) is desired at the measurement location. The following equation can be used to estimate the minimum tracer gas injection rate:

$$((Q_{T\text{-}MIN} \times 0.8)/Q_E) \times (C_T \div 100) \times 10^6 = \text{MML}$$

$$Q_{T\text{-}MIN} = 1.25 \times \text{MML} \times (Q_E/C_T) \times 10^{-4}$$

Where:

$Q_{T\text{-}MIN}$ = minimum volumetric flow rate of tracer gas injected, standard cubic feet per minute (scfm);
Q_E = volumetric flow rate of exhaust gas, scfm;
C_T = Tracer gas (SF_6) concentration in gas blend, percent by volume;
MML = minimum measured level, ppmv = 10 $\times IR_{DL}$ (for this example);
IR_{DL} = IR detection limit, ppmv.

Standard conditions: 20 °C, 760 millimeters of mercury (mm Hg).

To estimate the maximum tracer gas injection rate, assume that the span value is desired at the measurement location. The following equation can be used to estimate the maximum tracer gas injection rate:

$$((Q_{T\text{-}MAX} \times 0.8)/Q_E) \times (C_T \div 100) \times 10^6 = \text{span value}$$

$$Q_{T\text{-}MAX} = 1.25 \times \text{span value} \times (Q_E/C_T) \times 10^{-4}$$

sfrattini on LAPJZKW1R2 with $$_JOB
VerDate Sep<11>2014 09:16 Apr 04, 2023 Jkt 256165 PO 00000 Frm 00371 Fmt 8010 Sfmt 8003 Q:\40\256165.XXX PC31

Where:

$Q_{T\text{-}MAX}$ = maximum volumetric flow rate of tracer gas injected, scfm;

Span value = instrument span value, ppmv.

The following example illustrates this calculation procedure:

Find the range of volumetric flow rate of tracer gas to be injected when the following parameters are known:

Q_E = 60,000 scfm (typical exhaust gas flow rate from an enclosure);

C_T = 2 percent SF_6 in nitrogen;

IR_{DL} = 0.01 ppmv (per manufacturer's specifications);

$MML = 10 \times IR_{DL} = 0.10$ ppmv;

Span value = 0.40 ppmv;

Q_T = ?

Minimum tracer gas volumetric flow rate:

$Q_{T\text{-}MIN} = 1.25 \times MML \times (Q_E/C_T) \times 10^{-4}$

$Q_{T\text{-}MIN} = 1.25 \times 0.10 \times (60{,}000/2) \times 10^{-4} = 0.375$ scfm

Maximum tracer gas volumetric flow rate:

$Q_{T\text{-}MAX} = 1.25 \times \text{span value} \times (Q_E/C_T) \times 10^{-4}$

$Q_{T\text{-}MAX} = 1.25 \times 0.40 \times (60{,}000/2) \times 10^{-4} = 1.5$ scfm

In this example, the estimated total volumetric flow rate of the two percent SF_6 tracer gas injected through the manifolds in the enclosure lies between 0.375 and 1.5 scfm.

12.3 Calibration Error. Calculate the calibration error for the low-level and mid-level calibration gases using the following equation:

$$Err = |C_{std} - C_{meas}| \div C_{std} \times 100$$

Where:

Err = calibration error, percent;

C_{std} = low-level or mid-level calibration gas value, ppmv;

C_{meas} = measured response to low-level or mid-level concentration gas, ppmv.

12.4 Calibration Drift. Calculate the calibration drift for the zero and low-level calibration gases using the following equation:

$$D = \|C_{initial} - C_{final}\| \div C_{span} \times 100$$

Where:

D = calibration drift, percent;

$C_{initial}$ = low-level or mid-level calibration gas value measured before test run, ppmv;

C_{final} = low-level or mid-level calibration gas value measured after test run, ppmv;

C_{span} = span value, ppmv.

12.5 Calculate Capture Efficiency. The equation to calculate enclosure capture efficiency is provided below:

$$CE = (SF_{6\text{-}CD} \div SF_{6\text{-}INJ}) \times 100$$

Where:

CE = capture efficiency;

$SF_{6\text{-}CD}$ = mass of SF_6 measured at the inlet to the CD;

$SF_{6\text{-}INJ}$ = mass of SF_6 injected from the tracer source into the enclosure.

Calculate the CE for each of the initial three test runs. Then follow the procedures outlined in section 12.6 to calculate the overall capture efficiency.

12.6 Calculate Overall Capture Efficiency. After calculating the capture efficiency for each of the initial three test runs, follow the procedures in 40 CFR part 63, subpart KK, appendix A, to determine if the results of the testing can be used in determining compliance with the requirements of the rule. There are two methods that can be used: the DQO and LCL methods. The DQO method is described in section 3 of 40 CFR part 63, subpart KK, appendix A, and provides a measure of the precision of the capture efficiency testing conducted. Section 3 of 40 CFR part 63, subpart KK, appendix A, provides an example calculation using results from a facility. If the DQO criteria are met using the first set of three test runs, then the facility can use the average capture efficiency of these test results to determine the capture efficiency of the enclosure. If the DQO criteria are not met, then the facility can conduct another set of three runs and run the DQO analysis again using the results from the six runs *OR* the facility can elect to use the LCL approach.

The LCL method is described in section 4 of 40 CFR part 63, subpart KK, appendix A, and provides sources that may be performing much better than their regulatory requirement, a screening option by which they can demonstrate compliance. The LCL approach compares the 80 percent lower confidence limit for the mean measured CE value to the applicable regulatory requirement. If the LCL capture efficiency is higher than the applicable limit, then the facility is in initial compliance and would use the LCL capture efficiency as the capture efficiency to determine compliance. If the LCL capture efficiency is lower than the applicable limit, then the facility must perform additional test runs and re-run the DQO or LCL analysis.

13.0 Method Performance

13.1 Measurement System Performance Specifications.

13.1.1 Zero Drift. Less than ±3 percent of the span value.

13.1.2 Calibration Drift. Less than ±3 percent of the span value.

13.1.3 Calibration Error. Less than ±5 percent of the calibration gas value.

13.2 Flow Measurement Specifications. The mass flow, volumetric flow, or critical orifice control meter used should have an accuracy of greater than ±5 percent at the flow rate used.

13.3 Calibration and Tracer Gas Specifications. The manufacturer of the calibration and tracer gases should provide a recommended shelf life for each calibration gas cylinder over which the concentration does

sfrattini on LAPJZKW1R2 with $$_JOB
VerDate Sep<11>2014 09:16 Apr 04, 2023 Jkt 256165 PO 00000 Frm 00372 Fmt 8010 Sfmt 8002 Q:\40\256165.XXX PC31

not change more than ±2 percent from the certified value.

14.0 POLLUTION PREVENTION [RESERVED]

15.0 Waste Management [Reserved]

16.0 References

1. 40 CFR part 60, appendix A, EPA Method 1—Sample and velocity traverses for stationary sources.

2. 40 CFR part 60, appendix A, EPA Method 2—Determination of stack gas velocity and volumetric flow rate.

3. 40 CFR part 60, appendix A, EPA Method 3—Gas analysis for the determination of dry molecular weight.

4. 40 CFR part 60, appendix A, EPA Method 4—Determination of moisture content in stack gases.

5. SEMI F15–93 Test Method for Enclosures Using Sulfur Hexafluoride Tracer Gas and Gas Chromotography.

6. Memorandum from John S. Seitz, Director, Office of Air Quality Planning and Standards, to EPA Regional Directors, Revised Capture Efficiency Guidance for Control of Volatile Organic Compound Emissions, February 7, 1995. (That memorandum contains an attached technical document from Candace Sorrell, Emission Monitoring and Analysis Division, ''Guidelines for Determining Capture Efficiency,'' January 9, 1994).

7. Technical Systems Audit of Testing at Plant ''C,'' EPA–454/R–00–26, May 2000.

8. Material Safety Data Sheet for SF_6 Air Products and Chemicals, Inc. Website: *www3.airproducts.com.* October 2001.

17.0 TABLES, DIAGRAMS, FLOWCHARTS, AND VALIDATION DATA

TABLE 1 TO APPENDIX A—SUMMARY OF CRITICAL PHYSICAL MEASUREMENTS FOR ENCLOSURE TESTING

Measurement	Measurement instrumentation	Measurement frequency	Measurement site
Tracer gas injection rate	Mass flow meter, volumetric flow meter or critical orifice.	Continuous	Injection manifolds (cylinder gas).
Tracer gas concentration at control device inlet.	Infrared Spectrometer or GC/ECD.	Continuous (at least one reading per minute) for a minimum of 20 minutes.	Inlet duct to the control device (outlet duct of enclosure).
Volumetric air flow rate	EPA Methods 1, 2, 3, 4 (40 CFR part 60, appendix A). • Velocity sensor (Manometer/Pitot tube). • Thermocouple • Midget Impinger sampler • Orsat or Fyrite	Each test run for velocity (minimum); Daily for moisture and molecular weight.	Inlet duct to the control device (outlet duct of enclosure).

sfrattini on LAPJZKW1R2 with $$_JOB

VerDate Sep<11>2014 09:16 Apr 04, 2023 Jkt 256165 PO 00000 Frm 00373 Fmt 8010 Sfmt 8006 Q:\40\256165.XXX PC31

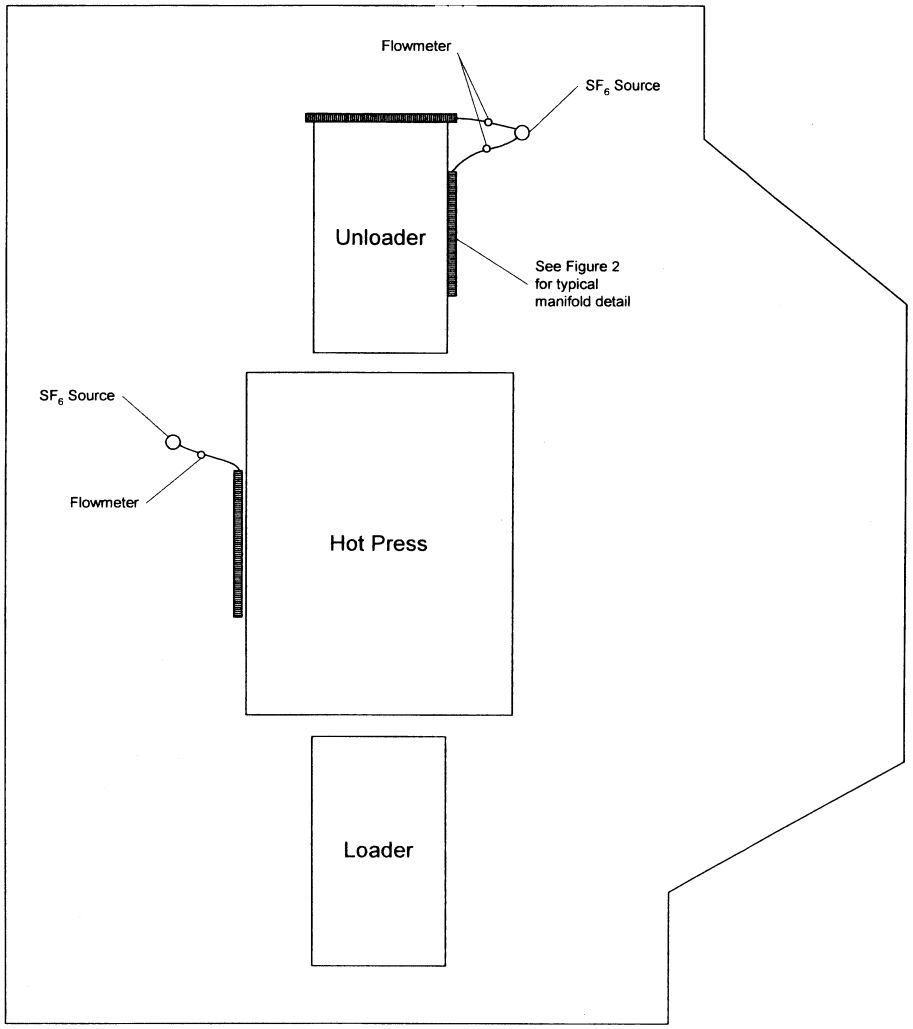

Figure 1. Plan view schematic of hot press and enclosure showing SF_6 manifold locations.

sfrattini on LAPJZKW1R2 with $$_JOB
VerDate Sep<11>2014 09:16 Apr 04, 2023 Jkt 256165 PO 00000 Frm 00374 Fmt 8010 Sfmt 8006 Q:\40\256165.XXX PC31
ER72AD04.008

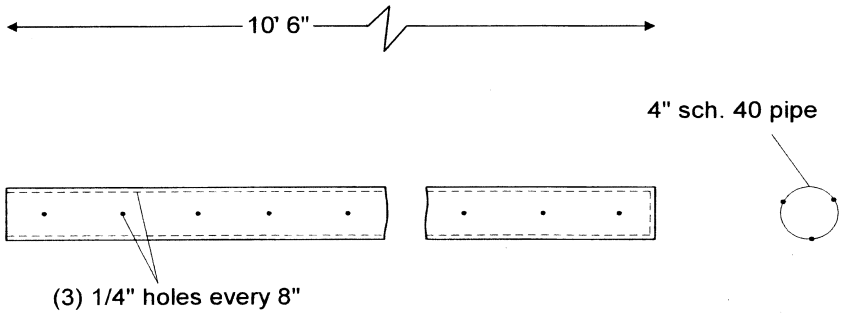

Elevation

Figure 2. Schematic detail for manifold system for SF_6 injection.

[69 FR 46011, July 30, 2004, as amended at 71 FR 8375, Feb. 16, 2006]

Subpart EEEE—National Emission Standards for Hazardous Air Pollutants: Organic Liquids Distribution (Non-Gasoline)

SOURCE: 69 FR 5063, Feb. 3, 2004, unless otherwise noted.

WHAT THIS SUBPART COVERS

§63.2330 What is the purpose of this subpart?

This subpart establishes national emission limitations, operating limits, and work practice standards for organic hazardous air pollutants (HAP) emitted from organic liquids distribution (OLD) (non-gasoline) operations at major sources of HAP emissions. This subpart also establishes requirements to demonstrate initial and continuous compliance with the emission limitations, operating limits, and work practice standards.

§63.2334 Am I subject to this subpart?

(a) Except as provided for in paragraphs (b) and (c) of this section, you are subject to this subpart if you own or operate an OLD operation that is located at, or is part of, a major source of HAP emissions. An OLD operation may occupy an entire plant site or be collocated with other industrial (*e.g.*, manufacturing) operations at the same plant site.

(b) Organic liquid distribution operations located at research and development facilities, consistent with section 112(c)(7) of the Clean Air Act (CAA), are not subject to this subpart.

(c) Organic liquid distribution operations do not include the activities and equipment, including product loading racks, used to process, store, or transfer organic liquids at facilities listed in paragraph (c) (1) and (2) of this section.

(1) Oil and natural gas production field facilities, as the term ''facility'' is defined in §63.761 of subpart HH.

(2) Natural gas transmission and storage facilities, as the term ''facility'' is defined in §63.1271 of subpart HHH.

§63.2338 What parts of my plant does this subpart cover?

(a) This subpart applies to each new, reconstructed, or existing OLD operation affected source.

(b) Except as provided in paragraph (c) of this section, the affected source is the collection of activities and equipment used to distribute organic liquids into, out of, or within a facility that is a major source of HAP. The affected source is composed of:

(1) All storage tanks storing organic liquids.

sfrattini on LAPJZKW1R2 with $$_JOB
VerDate Sep<11>2014 09:16 Apr 04, 2023 Jkt 256165 PO 00000 Frm 00375 Fmt 8010 Sfmt 8010 Q:\40\256165.XXX PC31
ER72AD04.009</GPH>

(2) All transfer racks at which organic liquids are loaded into or unloaded out of transport vehicles and/or containers.

(3) All equipment leak components in organic liquids service that are associated with:

(i) Storage tanks storing organic liquids;

(ii) Transfer racks loading or unloading organic liquids;

(iii) Pipelines that transfer organic liquids directly between two storage tanks that are subject to this subpart;

(iv) Pipelines that transfer organic liquids directly between a storage tank subject to this subpart and a transfer rack subject to this subpart; and

(v) Pipelines that transfer organic liquids directly between two transfer racks that are subject to this subpart.

(4) All transport vehicles while they are loading or unloading organic liquids at transfer racks subject to this subpart.

(5) All containers while they are loading or unloading organic liquids at transfer racks subject to this subpart.

(c) The equipment listed in paragraphs (c)(1) through (3) of this section and used in the identified operations is excluded from the affected source.

(1) Storage tanks, transfer racks, transport vehicles, containers, and equipment leak components that are part of an affected source under another 40 CFR part 63 national emission standards for hazardous air pollutants (NESHAP).

(2) Non-permanent storage tanks, transfer racks, transport vehicles, containers, and equipment leak components when used in special situation distribution loading and unloading operations (such as maintenance or upset liquids management).

(3) Storage tanks, transfer racks, transport vehicles, containers, and equipment leak components when used to conduct maintenance activities, such as stormwater management, liquid removal from tanks for inspections and maintenance, or changeovers to a different liquid stored in a storage tank.

(d) An affected source is a new affected source if you commenced construction of the affected source after April 2, 2002, and you meet the applicability criteria in § 63.2334 at the time you commenced operation.

(e) An affected source is reconstructed if you meet the criteria for reconstruction as defined in § 63.2.

(f) An affected source is existing if it is not new or reconstructed.

[69 FR 5063, Feb. 3, 2004, as amended at 71 FR 42904, July 28, 2006; 85 FR 40761, July 7, 2020]

§ 63.2342 When do I have to comply with this subpart?

(a) Except as specified in paragraph (e) of this section, if you have a new or reconstructed affected source, you must comply with this subpart according to the schedule identified in paragraph (a)(1), (2), or (3) of this section, as applicable.

(1)(i) Except as provided in paragraph (a)(1)(ii) of this section, if you startup your new affected source on or before February 3, 2004 or if you reconstruct your affected source on or before February 3, 2004, you must comply with the emission limitations, operating limits, and work practice standards for new and reconstructed sources in this subpart no later than February 3, 2004.

(ii) For any emission source listed in paragraph § 63.2338(b) at an affected source that commenced construction or reconstruction after April 2, 2002, but before February 3, 2004, that is required to be controlled based on the applicability criteria in this subpart, but:

(A) Would not have been required to be controlled based on the applicability criteria as proposed for this subpart, you must comply with the emission limitations, operating limits, and work practice standards for each such emission source based on the schedule found in paragraph (b) of this section or at startup, whichever is later; or

(B) Would have been subject to a less stringent degree of control requirement as proposed for this subpart, you must comply with the emission limitations, operating limits, and work practice standards in this subpart for each such emission source based on the schedule found in paragraph (b) of this section or at startup, whichever is later, and if you start up your affected new or reconstructed source before February 5, 2007, you must comply with the emission limitations, operating limits, and work practice standards for

sfrattini on LAPJZKW1R2 with $$_JOB
VerDate Sep<11>2014 09:16 Apr 04, 2023 Jkt 256165 PO 00000 Frm 00376 Fmt 8010 Sfmt 8010 Q:\40\256165.XXX PC31

each such emission source as proposed for this subpart, until you are required to comply with the emission limitations, operating limits, and work practice standards in this subpart for each such emission source based on the schedule found in paragraph (b) of this section.

(2) If you commence construction of or reconstruct your affected source after February 3, 2004, you must comply with the emission limitations, operating limits, and work practice standards for new and reconstructed sources in this subpart upon startup of your affected source.

(3) If, after startup of a new affected source, the total actual annual facility-level organic liquid loading volume at that source exceeds the criteria for control in Table 2 to this subpart, items 9 and 10, the owner or operator must comply with the transfer rack requirements specified in §63.2346(b) immediately; that is, be in compliance the first day of the period following the end of the 3-year period triggering the control criteria.

(b) Except as specified in paragraph (e) of this section, if you have an existing affected source, you must comply with this subpart according to the schedule identified in paragraph (b)(1), (2), or (3) of this section, as applicable.

(1) If you have an existing affected source, you must comply with the emission limitations, operating limits, and work practice standards for existing affected sources no later than February 5, 2007, except as provided in paragraphs (b)(2) and (3) of this section.

(2) Floating roof storage tanks at existing affected sources must be in compliance with the work practice standards in Table 4 to this subpart, item 1, at all times after the next degassing and cleaning activity or within 10 years after February 3, 2004, whichever occurs first. If the first degassing and cleaning activity occurs during the 3 years following February 3, 2004, the compliance date is February 5, 2007.

(3)(i) If an addition or change other than reconstruction as defined in §63.2 is made to an existing affected facility that causes the total actual annual facility-level organic liquid loading volume to exceed the criteria for control in Table 2 to this subpart, items 7 and 8, the owner or operator must comply with the transfer rack requirements specified in §63.2346(b) immediately; that is, be in compliance the first day of the period following the end of the 3-year period triggering the control criteria.

(ii) If the owner or operator believes that compliance with the transfer rack emission limits cannot be achieved immediately, as specified in paragraph (b)(3)(i) of this section, the owner or operator may submit a request for a compliance extension, as specified in paragraphs (b)(3)(ii)(A) through (I) of this section. Subject to paragraph (b)(3)(ii)(B) of this section, until an extension of compliance has been granted by the Administrator (or a State with an approved permit program) under this paragraph (b)(3)(ii), the owner or operator of the transfer rack subject to the requirements of this section shall comply with all applicable requirements of this subpart. Advice on requesting an extension of compliance may be obtained from the Administrator (or the State with an approved permit program).

(A) *Submittal.* The owner or operator shall submit a request for a compliance extension to the Administrator (or a State, when the State has an approved 40 CFR part 70 permit program and the source is required to obtain a 40 CFR part 70 permit under that program, or a State, when the State has been delegated the authority to implement and enforce the emission standard for that source) seeking an extension allowing the source up to 1 additional year to comply with the transfer rack standard, if such additional period is necessary for the installation of controls. The owner or operator of the affected source who has requested an extension of compliance under this paragraph (b)(3)(ii)(A) and who is otherwise required to obtain a title V permit shall apply for such permit, or apply to have the source's title V permit revised to incorporate the conditions of the extension of compliance. The conditions of an extension of compliance granted under this paragraph (b)(3)(ii)(A) will be incorporated into the affected source's title V permit according to the provisions of 40 CFR part 70 or Federal

sfrattini on LAPJZKW1R2 with $$_JOB
VerDate Sep<11>2014 09:16 Apr 04, 2023 Jkt 256165 PO 00000 Frm 00377 Fmt 8010 Sfmt 8010 Q:\40\256165.XXX PC31

title V regulations in this chapter (42 U.S.C. 7661), whichever are applicable.

(B) *When to submit.* (*1*) Any request submitted under paragraph (b)(3)(ii)(A) of this section must be submitted in writing to the appropriate authority no later than 120 days prior to the affected source's compliance date (as specified in paragraph (b)(3)(i) of this section), except as provided for in paragraph (b)(3)(ii)(B)(*2*) of this section. Nonfrivolous requests submitted under this paragraph (b)(3)(ii)(B)(*1*) will stay the applicability of the rule as to the emission points in question until such time as the request is granted or denied. A denial will be effective as of the date of denial.

(*2*) An owner or operator may submit a compliance extension request after the date specified in paragraph (b)(3)(ii)(B)(*1*) of this section provided the need for the compliance extension arose after that date, and before the otherwise applicable compliance date and the need arose due to circumstances beyond reasonable control of the owner or operator. This request must include, in addition to the information required in paragraph (b)(3)(ii)(C) of this section, a statement of the reasons additional time is needed and the date when the owner or operator first learned of the problems. Nonfrivolous requests submitted under this paragraph (b)(3)(ii)(B)(*2*) will stay the applicability of the rule as to the emission points in question until such time as the request is granted or denied. A denial will be effective as of the original compliance date.

(C) *Information required.* The request for a compliance extension under paragraph (b)(3)(ii)(A) of this section shall include the following information:

(*1*) The name and address of the owner or operator and the address of the existing source if it differs from the address of the owner or operator;

(*2*) The name, address, and telephone number of a contact person for further information;

(*3*) An identification of the organic liquid distribution operation and of the specific equipment for which additional compliance time is required;

(*4*) A description of the controls to be installed to comply with the standard;

(*5*) Justification for the length of time being requested; and

(*6*) A compliance schedule, including the date by which each step toward compliance will be reached. At a minimum, the list of dates shall include:

(*i*) The date by which on-site construction, installation of emission control equipment, or a process change is planned to be initiated;

(*ii*) The date by which on-site construction, installation of emission control equipment, or a process change is to be completed; and

(*iii*) The date by which final compliance is to be achieved.

(D) *Approval of request for extension of compliance.* Based on the information provided in any request made under paragraph (b)(3)(ii)(C) of this section, or other information, the Administrator (or the State with an approved permit program) may grant an extension of compliance with the transfer rack emission standard, as specified in paragraph (b)(3)(ii) of this section. The extension will be in writing and will—

(*1*) Identify each affected source covered by the extension;

(*2*) Specify the termination date of the extension;

(*3*) Specify the dates by which steps toward compliance are to be taken, if appropriate;

(*4*) Specify other applicable requirements to which the compliance extension applies (e.g., performance tests);

(*5*) Specify the contents of the progress reports to be submitted and the dates by which such reports are to be submitted, if required pursuant to paragraph (b)(3)(ii)(E) of this section.

(*6*) Under paragraph (b)(3)(ii) of this section, specify any additional conditions that the Administrator (or the State) deems necessary to assure installation of the necessary controls and protection of the health of persons during the extension period.

(E) *Progress reports.* The owner or operator of an existing source that has been granted an extension of compliance under paragraph (b)(3)(ii)(D) of this section may be required to submit to the Administrator (or the State with an approved permit program) progress reports indicating whether the steps toward compliance outlined in

sfrattini on LAPJZKW1R2 with $$_JOB
VerDate Sep<11>2014 09:16 Apr 04, 2023 Jkt 256165 PO 00000 Frm 00378 Fmt 8010 Sfmt 8010 Q:\40\256165.XXX PC31

the compliance schedule have been reached.

(F) *Notification of approval or intention to deny*. (*1*) The Administrator (or the State with an approved permit program) will notify the owner or operator in writing of approval or intention to deny approval of a request for an extension of compliance within 30 calendar days after receipt of sufficient information to evaluate a request submitted under paragraph (b)(3)(ii) of this section. The Administrator (or the State) will notify the owner or operator in writing of the status of his/her application; that is, whether the application contains sufficient information to make a determination, within 30 calendar days after receipt of the original application and within 30 calendar days after receipt of any supplementary information that is submitted. The 30-day approval or denial period will begin after the owner or operator has been notified in writing that his/her application is complete. Failure by the Administrator to act within 30 calendar days to approve or disapprove a request submitted under paragraph (b)(3)(ii) of this section does not constitute automatic approval of the request.

(*2*) When notifying the owner or operator that his/her application is not complete, the Administrator will specify the information needed to complete the application and provide notice of opportunity for the applicant to present, in writing, within 30 calendar days after he/she is notified of the incomplete application, additional information or arguments to the Administrator to enable further action on the application.

(*3*) Before denying any request for an extension of compliance, the Administrator (or the State with an approved permit program) will notify the owner or operator in writing of the Administrator's (or the State's) intention to issue the denial, together with:

(*i*) Notice of the information and findings on which the intended denial is based; and

(*ii*) Notice of opportunity for the owner or operator to present in writing, within 15 calendar days after he/she is notified of the intended denial, additional information or arguments to the Administrator (or the State) before further action on the request.

(*4*) The Administrator's final determination to deny any request for an extension will be in writing and will set forth the specific grounds on which the denial is based. The final determination will be made within 30 calendar days after presentation of additional information or argument (if the application is complete), or within 30 calendar days after the final date specified for the presentation if no presentation is made.

(G) *Termination of extension of compliance*. The Administrator (or the State with an approved permit program) may terminate an extension of compliance at an earlier date than specified if any specification under paragraph (b)(3)(ii)(D)(*3*) or paragraph (b)(3)(ii)(D)(*4*) of this section is not met. Upon a determination to terminate, the Administrator will notify, in writing, the owner or operator of the Administrator's determination to terminate, together with:

(*1*) Notice of the reason for termination; and

(*2*) Notice of opportunity for the owner or operator to present in writing, within 15 calendar days after he/she is notified of the determination to terminate, additional information or arguments to the Administrator before further action on the termination.

(*3*) A final determination to terminate an extension of compliance will be in writing and will set forth the specific grounds on which the termination is based. The final determination will be made within 30 calendar days after presentation of additional information or arguments, or within 30 calendar days after the final date specified for the presentation if no presentation is made.

(H) The granting of an extension under this section shall not abrogate the Administrator's authority under section 114 of the CAA.

(I) *Limitation on use of compliance extension*. The owner or operator may request an extension of compliance under the provisions specified in paragraph (b)(3)(ii) of this section only once for each facility.

(c) If you have an area source that does not commence reconstruction but

sfrattini on LAPJZKW1R2 with $$_JOB
VerDate Sep<11>2014 09:16 Apr 04, 2023 Jkt 256165 PO 00000 Frm 00379 Fmt 8010 Sfmt 8010 Q:\40\256165.XXX PC31

increases its emissions or its potential to emit such that it becomes a major source of HAP emissions and an existing affected source subject to this subpart, you must be in compliance by 3 years after the area source becomes a major source.

(d) You must meet the notification requirements in §§ 63.2343 and 63.2382(a), as applicable, according to the schedules in § 63.2382(a) and (b)(1) through (2) and in subpart A of this part. Some of these notifications must be submitted before the compliance dates for the emission limitations, operating limits, and work practice standards in this subpart.

(e) An affected source that commenced construction or reconstruction on or before October 21, 2019, must be in compliance with the requirements listed in paragraphs (e)(1) through (5) of this section upon initial startup or July 7, 2023, whichever is later. An affected source that commenced construction or reconstruction after October 21, 2019, must be in compliance with the requirements listed in paragraphs (e)(1) through (5) of this section upon initial startup or July 7, 2020, whichever is later.

(1) The requirements for storage tanks not requiring control specified in § 63.2343(b)(4).

(2) The requirements for storage tanks at an existing affected source specified in §§ 63.2346(a)(5) and (6), 63.2386(d)(3)(iii), 63.2396(a)(4), footnote (2) to Table 2 to this subpart, and Table 2b to this subpart.

(3) The flare requirements specified in §§ 63.2346(k), 63.2382(d)(2)(ix), 63.2386(d)(5), 63.2390(h), footnote (1) to Table 2 to this subpart, item 7.d, to Table 3 to this subpart, items 1.a.iii and 2.a.iii of Table 8 to this subpart, and item 7.e of Table 9 to this subpart.

(4) The requirements specified in §§ 63.2346(l), 63.2350(d), 63.2366(c), 63.2390(f) and (g), 63.2386(c)(11) and (12), 63.2386(d)(1)(xiii) and (f) through (j), 63.2378(e), footnote (1) to Table 9 to this subpart, and items 1.a.i and 2.a.ii of Table 10 to this subpart.

(5) The performance testing requirements specified in § 63.2354(b)(6).

[69 FR 5063, Feb. 3, 2004, as amended at 71 FR 42905, July 28, 2006; 85 FR 40761, July 7, 2020]

§ 63.2343 What are my requirements for emission sources not requiring control?

This section establishes the notification, recordkeeping, and reporting requirements for emission sources identified in § 63.2338 that do not require control under this subpart (*i.e.*, under § 63.2346(a) through (e)). Such emission sources are not subject to any other notification, recordkeeping, or reporting sections in this subpart, including § 63.2350(c), except as indicated in paragraphs (a) through (d) of this section.

(a) For each storage tank subject to this subpart having a capacity of less than 18.9 cubic meters (5,000 gallons) and for each transfer rack subject to this subpart that only unloads organic liquids (*i.e.*, no organic liquids are loaded at any of the transfer racks), you must keep documentation that verifies that each storage tank and transfer rack identified in this paragraph (a) is not required to be controlled. The documentation must be kept up-to-date (*i.e.*, all such emission sources at a facility are identified in the documentation regardless of when the documentation was last compiled) and must be in a form suitable and readily available for expeditious inspection and review according to § 63.10(b)(1), including records stored in electronic form in a separate location. The documentation may consist of identification of the tanks and transfer racks identified in this paragraph (a) on a plant site plan or process and instrumentation diagram (P&ID).

(b) Except as specified in paragraph (b)(4) of this section, for each storage tank subject to this subpart having a capacity of 18.9 cubic meters (5,000 gallons) or more that is not subject to control based on the criteria specified in Table 2 to this subpart, items 1 through 6, you must comply with the requirements specified in paragraphs (b)(1) through (3) of this section.

(1)(i) You must submit the information in § 63.2386(c)(1), (2), (3), and (10)(i) in either the Notification of Compliance Status, according to the schedule specified in Table 12 to this subpart, or in your first Compliance report, according to the schedule specified in § 63.2386(b), whichever occurs first.

sfrattini on LAPJZKW1R2 with $$_JOB
VerDate Sep<11>2014 09:16 Apr 04, 2023 Jkt 256165 PO 00000 Frm 00380 Fmt 8010 Sfmt 8010 Q:\40\256165.XXX PC31

(ii)(A) If you submit your first Compliance report before your Notification of Compliance Status, the Notification of Compliance Status must contain the information specified in §63.2386(d)(3) and (4) if any of the changes identified in paragraph (d) of this section have occurred since the filing of the first Compliance report. If none of the changes identified in paragraph (d) of this section have occurred since the filing of the first Compliance report, you do not need to report the information specified in §63.2386(c)(10)(i) when you submit your Notification of Compliance Status.

(B) If you submit your Notification of Compliance Status before your first Compliance report, your first Compliance report must contain the information specified in §63.2386(d)(3) and (4) if any of the changes specified in paragraph (d) of this section have occurred since the filing of the Notification of Compliance Status.

(iii) If you are already submitting a Notification of Compliance Status or a first Compliance report under §63.2386(c), you do not need to submit a separate Notification of Compliance Status or first Compliance report for each storage tank that meets the conditions identified in paragraph (b) of this section (i.e., a single Notification of Compliance Status or first Compliance report should be submitted).

(2)(i) You must submit a subsequent Compliance report according to the schedule in §63.2386(b) whenever any of the events in paragraph (d) of this section occur, as applicable.

(ii) Your subsequent Compliance reports must contain the information in §63.2386(c)(1), (2), (3) and, as applicable, in §63.2386(d)(3) and (4). If you are already submitting a subsequent Compliance report under §63.2386(d), you do not need to submit a separate subsequent Compliance report for each storage tank that meets the conditions identified in paragraph (b) of this section (i.e., a single subsequent Compliance report should be submitted).

(3) For each storage tank that meets the conditions identified in paragraph (b) of this section, you must keep documentation, including a record of the annual average true vapor pressure of the total Table 1 organic HAP in the stored organic liquid, that verifies the storage tank is not required to be controlled under this subpart. The documentation must be kept up-to-date and must be in a form suitable and readily available for expeditious inspection and review according to §63.10(b)(1), including records stored in electronic form in a separate location.

(4) Beginning no later than the compliance dates specified in §63.2342(e), the requirements specified in paragraphs (b)(1) through (3) of this section apply to the following storage tanks:

(i) Storage tanks at an existing affected source subject to this subpart having a capacity of 18.9 cubic meters (5,000 gallons) or more that are not subject to control based on the criteria specified in Table 2b to this subpart, items 1 through 3.

(ii) Storage tanks at a reconstructed or new affected source subject to this subpart having a capacity of 18.9 cubic meters (5,000 gallons) or more that are not subject to control based on the criteria specified in Table 2 to this subpart, items 3 through 6.

(c) For each transfer rack subject to this subpart that loads organic liquids but is not subject to control based on the criteria specified in Table 2 to this subpart, items 7 through 10, you must comply with the requirements specified in paragraphs (c)(1) through (3) of this section.

(1)(i) You must submit the information in §63.2386(c)(1), (2), (3), and (10)(i) in either the Notification of Compliance Status, according to the schedule specified in Table 12 to this subpart, or a first Compliance report, according to the schedule specified in §63.2386(b), whichever occurs first.

(ii)(A) If you submit your first Compliance report before your Notification of Compliance Status, the Notification of Compliance Status must contain the information specified in §63.2386(d)(3) and (4) if any of the changes identified in paragraph (d) of this section have occurred since the filing of the first Compliance report. If none of the changes identified in paragraph (d) of this section have occurred since the filing of the first Compliance report, you do not need to report the information specified in §63.2386(c)(10)(i) when you

sfrattini on LAPJZKW1R2 with $$_JOB
VerDate Sep<11>2014 09:16 Apr 04, 2023 Jkt 256165 PO 00000 Frm 00381 Fmt 8010 Sfmt 8010 Q:\40\256165.XXX PC31

submit your Notification of Compliance Status.

(B) If you submit your Notification of Compliance Status before your first Compliance report, your first Compliance report must contain the information specified in § 63.2386(d)(3) and (4) if any of the changes specified in paragraph (d) of this section have occurred since the filing of the Notification of Compliance Status.

(iii) If you are already submitting a Notification of Compliance Status or a first Compliance report under § 63.2386(c), you do not need to submit a separate Notification of Compliance Status or first Compliance report for each transfer rack that meets the conditions identified in this paragraph (c) (*i.e.*, a single Notification of Compliance Status or first Compliance report should be submitted).

(2)(i) You must submit a subsequent Compliance report according to the schedule in § 63.2386(b) whenever any of the events in paragraph (d) of this section occur, as applicable.

(ii) Your subsequent Compliance reports must contain the information in § 63.2386(c)(1), (2), (3) and, as applicable, in § 63.2386(d)(3) and (4). If you are already submitting a subsequent Compliance report under § 63.2386(d), you do not need to submit a separate subsequent Compliance report for each transfer rack that meets the conditions identified in paragraph (c) of this section (i.e., a single subsequent Compliance report should be submitted).

(3) For each transfer rack that meets the conditions identified in paragraph (c) of this section, you must keep documentation, including the records specified in § 63.2390(d), that verifies the transfer rack is not required to be controlled under this subpart. The documentation must be kept up-to-date and must be in a form suitable and readily available for expeditious inspection and review according to § 63.10(b)(1), including records stored in electronic form in a separate location.

(d) If one or more of the events identified in paragraphs (d)(1) through (4) of this section occur since the filing of the Notification of Compliance Status or the last Compliance report, you must submit a subsequent Compliance report as specified in paragraphs (b)(2) and (c)(2) of this section.

(1) Any storage tank or transfer rack became subject to control under this subpart EEEE; or

(2) Any storage tank equal to or greater than 18.9 cubic meters (5,000 gallons) became part of the affected source but is not subject to any of the emission limitations, operating limits, or work practice standards of this subpart; or

(3) Any transfer rack (except those racks at which only unloading of organic liquids occurs) became part of the affected source; or

(4) Any of the information required in § 63.2386(c)(1), § 63.2386(c)(2), or § 63.2386(c)(3) has changed.

[71 FR 42906, July 28, 2006, as amended at 73 FR 21830, Apr. 23, 2008; 85 FR 40761, July 7, 2020]

EMISSION LIMITATIONS, OPERATING LIMITS, AND WORK PRACTICE STANDARDS

§ 63.2346 What emission limitations, operating limits, and work practice standards must I meet?

(a) *Storage tanks.* Except as specified in paragraphs (a)(5) and (6) and (l) of this section, for each storage tank storing organic liquids that meets the tank capacity and liquid vapor pressure criteria for control in Table 2 to this subpart, items 1 through 5, you must comply with paragraph (a)(1), (2), (3), or (4) of this section. For each storage tank storing organic liquids that meets the tank capacity and liquid vapor pressure criteria for control in Table 2 to this subpart, item 6, you must comply with paragraph (a)(1), (2), or (4) of this section.

(1) Meet the emission limits specified in Table 2 or 2b to this subpart and comply with paragraph (l) of this section and the applicable requirements specified in subpart SS of this part, for meeting emission limits, except substitute the term ''storage tank'' at each occurrence of the term ''storage vessel'' in subpart SS.

(2) Route emissions to fuel gas systems or back into a process as specified in subpart SS of this part. If you comply with this paragraph, then you must also comply with the requirements

sfrattini on LAPJZKW1R2 with $$_JOB
VerDate Sep<11>2014 09:16 Apr 04, 2023 Jkt 256165 PO 00000 Frm 00382 Fmt 8010 Sfmt 8010 Q:\40\256165.XXX PC31

specified in paragraph (l) of this section.

(3) Comply with 40 CFR part 63, subpart WW (control level 2).

(4) Use a vapor balancing system that complies with the requirements specified in paragraphs (a)(4)(i) through (vii) of this section and with the recordkeeping requirements specified in § 63.2390(e).

(i) The vapor balancing system must be designed and operated to route organic HAP vapors displaced from loading of the storage tank to the transport vehicle from which the storage tank is filled.

(ii) Transport vehicles must have a current certification in accordance with the United States Department of Transportation (U.S. DOT) qualification and maintenance requirements of 49 CFR part 180, subparts E (for cargo tanks) and F (for tank cars).

(iii) Organic liquids must only be unloaded from cargo tanks or tank cars when vapor collection systems are connected to the storage tank's vapor collection system.

(iv) No pressure relief device on the storage tank, on the vapor return line, or on the cargo tank or tank car, shall open during loading or as a result of diurnal temperature changes (breathing losses).

(v) Pressure relief devices must be set to no less than 2.5 pounds per square inch gauge (psig) at all times to prevent breathing losses. Pressure relief devices may be set at values less than 2.5 psig if the owner or operator provides rationale in the notification of compliance status report explaining why the alternative value is sufficient to prevent breathing losses at all times. The owner or operator shall comply with paragraphs (a)(4)(v)(A) through (C) of this section for each relief valve.

(A) The relief valve shall be monitored quarterly using the method described in § 63.180(b).

(B) An instrument reading of 500 parts per million by volume (ppmv) or greater defines a leak.

(C) When a leak is detected, it shall be repaired as soon as practicable, but no later than 5 days after it is detected, and the owner or operator shall comply with the recordkeeping requirements of § 63.181(d)(1) through (4).

(vi) Cargo tanks and tank cars that deliver organic liquids to a storage tank must be reloaded or cleaned at a facility that utilizes the control techniques specified in paragraph (a)(4)(vi)(A) or (a)(4)(vi)(B) of this section.

(A) The cargo tank or tank car must be connected to a closed-vent system with a control device that reduces inlet emissions of total organic HAP by 95 percent by weight or greater or to an exhaust concentration less than or equal to 20 ppmv, on a dry basis corrected to 3 percent oxygen for combustion devices using supplemental combustion air.

(B) A vapor balancing system designed and operated to collect organic HAP vapor displaced from the cargo tank or tank car during reloading must be used to route the collected vapor to the storage tank from which the liquid being transferred originated or to another storage tank connected to a common header.

(vii) The owner or operator of the facility where the cargo tank or tank car is reloaded or cleaned must comply with paragraphs (a)(4)(vii)(A) through (D) of this section.

(A) Submit to the owner or operator of the storage tank and to the Administrator a written certification that the reloading or cleaning facility will meet the requirements of paragraph (a)(4)(vii)(A) through (C) of this section. The certifying entity may revoke the written certification by sending a written statement to the owner or operator of the storage tank giving at least 90 days notice that the certifying entity is rescinding acceptance of responsibility for compliance with the requirements of this paragraph (a)(4)(vii) of this section.

(B) If complying with paragraph (a)(4)(vi)(A) of this section, comply with the requirements for a closed vent system and control device as specified in this subpart EEEE. The notification requirements in § 63.2382 and the reporting requirements in § 63.2386 do not apply to the owner or operator of the offsite cleaning or reloading facility.

(C) If complying with paragraph (a)(4)(vi)(B) of this section, keep the

sfrattini on LAPJZKW1R2 with $$_JOB
VerDate Sep<11>2014 09:16 Apr 04, 2023 Jkt 256165 PO 00000 Frm 00383 Fmt 8010 Sfmt 8010 Q:\40\256165.XXX PC31

records specified in § 63.2390(e)(3) or equivalent recordkeeping approved by the Administrator.

(D) After the compliance dates specified in § 63.2342, at an offsite reloading or cleaning facility subject to § 63.2346(a)(4), compliance with the monitoring, recordkeeping, and reporting provisions of any other subpart of this part 63 that has monitoring, recordkeeping, and reporting provisions constitutes compliance with the monitoring, recordkeeping and reporting provisions of § 63.2346(a)(4)(vii)(B) or § 63.2346(a)(4)(vii)(C). You must identify in your notification of compliance status report required by § 63.2382(d) the subpart of this part 63 with which the owner or operator of the offsite reloading or cleaning facility complies.

(5) Beginning no later than the compliance dates specified in § 63.2342(e), the tank capacity criteria, liquid vapor pressure criteria, and emission limits specified for storage tanks at an existing affected source in Table 2 of this subpart, item 1 no longer apply. Instead, for each storage tank at an existing affected source storing organic liquids that meets the tank capacity and liquid vapor pressure criteria for control in Table 2b to this subpart, items 1 through 3, you must comply with paragraph (a)(1), (2), (3), or (4) and paragraph (a)(6) of this section.

(6) Beginning no later than the compliance dates specified in § 63.2342(e), tank emissions during storage tank shutdown operations (*i.e.*, emptying and degassing of a storage tank) for each storage tank at an affected source storing organic liquids that meets the tank capacity and liquid vapor pressure criteria for control in items 3 through 6 of Table 2 to this subpart, or items 1 through 3 of Table 2b to this subpart, you must comply with paragraphs (a)(6)(i) through (iii) of this section during tank emptying and degassing until the vapor space concentration in the tank is less than 10 percent of the lower explosive limit (LEL). The owner or operator must determine the LEL using process instrumentation or portable measurement devices and follow procedures for calibration and maintenance according to manufacturer's specifications.

(i) Remove organic liquids from the storage tank as much as practicable;

(ii) Comply with either of the following:

(A) The requirements of Table 2 or 2b to this subpart, item 1.a.i. as applicable; OR,

(B) The requirements of Table 4 to this subpart, item 1.b.

(iii) Comply with the requirements in § 63.2350(d) for each storage tank shutdown event and maintain records necessary to demonstrate compliance with the requirements in § 63.2350(d) including, if appropriate, records of existing standard site procedures used to empty and degas (deinventory) equipment for safety purposes.

(b) *Transfer racks.* For each transfer rack that is part of the collection of transfer racks that meets the total actual annual facility-level organic liquid loading volume criterion for control in Table 2 to this subpart, items 7 through 10, you must comply with paragraph (b)(1), (b)(2), or (b)(3) of this section for each arm in the transfer rack loading an organic liquid whose organic HAP content meets the organic HAP criterion for control in Table 2 to this subpart, items 7 through 10. For existing affected sources, you must comply with paragraph (b)(1), (b)(2), or (b)(3)(i) of this section during the loading of organic liquids into transport vehicles. For new affected sources, you must comply with paragraph (b)(1), (b)(2), or (b)(3)(i) and (ii) of this section during the loading of organic liquids into transport vehicles and containers. If the total actual annual facility-level organic liquid loading volume at any affected source is equal to or greater than the loading volume criteria for control in Table 2 to this subpart, but at a later date is less than the loading volume criteria for control, compliance with paragraph (b)(1), (b)(2), or (b)(3) of this section is no longer required. For new sources and reconstructed sources, as defined in § 63.2338(d) and (e), if at a later date, the total actual annual facility-level organic liquid loading volume again becomes equal to or greater than the loading volume criteria for control in Table 2 to this subpart, the owner or operator must comply with paragraph (b)(1), (b)(2), or (b)(3)(i) and (ii) of this section immediately, as

sfrattini on LAPJZKW1R2 with $$_JOB
VerDate Sep<11>2014 09:16 Apr 04, 2023 Jkt 256165 PO 00000 Frm 00384 Fmt 8010 Sfmt 8010 Q:\40\256165.XXX PC31

specified in §63.2342(a)(3). For existing sources, as defined in §63.2338(f), if at a later date, the total actual annual facility-level organic liquid loading volume again becomes equal to or greater than the loading volume criteria for control in Table 2 to this subpart, the owner or operator must comply with paragraph (b)(1), (b)(2), or (b)(3)(i) of this section immediately, as specified in §63.2342(b)(3)(i), unless an alternative compliance schedule has been approved under §63.2342(b)(3)(ii) and subject to the use limitation specified in §63.2342(b)(3)(ii)(I).

(1) Meet the emission limits specified in Table 2 to this subpart and comply with paragraph (l) of this section and the applicable requirements for transfer racks specified in subpart SS of this part, for meeting emission limits.

(2) Route emissions to fuel gas systems or back into a process as specified in subpart SS of this part. If you comply with this paragraph, then you must also comply with the requirements specified in paragraph (l) of this section.

(3)(i) Use a vapor balancing system that routes organic HAP vapors displaced from the loading of organic liquids into transport vehicles to the storage tank from which the liquid being loaded originated or to another storage tank connected to a common header.

(ii) Use a vapor balancing system that routes the organic HAP vapors displaced from the loading of organic liquids into containers directly (e.g., no intervening tank or containment area such as a room) to the storage tank from which the liquid being loaded originated or to another storage tank connected to a common header.

(c) *Equipment leak components.* For each pump, valve, and sampling connection that operates in organic liquids service for at least 300 hours per year, you must comply with paragraph (l) of this section and the applicable requirements under subpart TT of this part (control level 1), subpart UU of this part (control level 2), or subpart H of this part. Pumps, valves, and sampling connectors that are insulated to provide protection against persistent subfreezing temperatures are subject to the ''difficult to monitor'' provisions in the applicable subpart selected by the owner or operator. This paragraph only applies if the affected source has at least one storage tank or transfer rack that meets the applicability criteria for control in Table 2 or 2b to this subpart.

(d) *Transport vehicles.* For each transport vehicle equipped with vapor collection equipment that is loaded at a transfer rack that is subject to control based on the criteria specified in Table 2 to this subpart, items 7 through 10, you must comply with paragraph (d)(1) of this section. For each transport vehicle without vapor collection equipment that is loaded at a transfer rack that is subject to control based on the criteria specified in Table 2 to this subpart, items 7 through 10, you must comply with paragraph (d)(2) of this section.

(1) Follow the steps in 40 CFR 60.502(e) to ensure that organic liquids are loaded only into vapor-tight transport vehicles and comply with the provisions in 40 CFR 60.502(f) through (i), except substitute the term ''transport vehicle'' at each occurrence of the term ''tank truck'' or ''gasoline tank truck'' in those paragraphs.

(2) Ensure that organic liquids are loaded only into transport vehicles that have a current certification in accordance with the U.S. DOT qualification and maintenance requirements in 49 CFR part 180, subpart E for cargo tanks and subpart F for tank cars.

(e) *Operating limits.* For each high throughput transfer rack, you must meet each operating limit in Table 3 to this subpart for each control device used to comply with the provisions of this subpart whenever emissions from the loading of organic liquids are routed to the control device. Except as specified in paragraph (k) of this section, for each storage tank and low throughput transfer rack, you must comply with paragraph (l) of this section and the requirements for monitored parameters as specified in subpart SS of this part, for storage vessels and, during the loading of organic liquids, for low throughput transfer racks, respectively. Alternatively, you may comply with the operating limits in Table 3 to this subpart.

(f) *Surrogate for organic HAP.* For noncombustion devices, if you elect to

sfrattini on LAPJZKW1R2 with $$_JOB
VerDate Sep<11>2014 09:16 Apr 04, 2023 Jkt 256165 PO 00000 Frm 00385 Fmt 8010 Sfmt 8010 Q:\40\256165.XXX PC31

demonstrate compliance with a percent reduction requirement in Table 2 or 2b to this subpart using total organic compounds (TOC) rather than organic HAP, you must first demonstrate, subject to the approval of the Administrator, that TOC is an appropriate surrogate for organic HAP in your case; that is, for your storage tank(s) and/or transfer rack(s), the percent destruction of organic HAP is equal to or higher than the percent destruction of TOC. This demonstration must be conducted prior to or during the initial compliance test.

(g) As provided in § 63.6(g), you may request approval from the Administrator to use an alternative to the emission limitations, operating limits, and work practice standards in this section. You must follow the procedures in § 63.177(b) through (e) in applying for permission to use such an alternative. If you apply for permission to use an alternative to the emission limitations, operating limits, and work practice standards in this section, you must submit the information described in § 63.6(g)(2).

(h) [Reserved]

(i) *Safety device*. Opening of a safety device is allowed at any time that it is required to avoid unsafe operating conditions. Beginning no later than July 7, 2023, this paragraph no longer applies.

(j) If you elect to comply with this subpart by combining emissions from different emission sources subject to this subpart in a single control device, then you must comply with the provisions specified in § 63.982(f).

(k) *Flares*. Beginning no later than the compliance dates specified in § 63.2342(e), for each storage tank and low throughput transfer rack that is subject to control based on the criteria specified in Tables 2 or 2b to this subpart, if you vent emissions through a closed vent system to a flare then you must comply with the requirements specified in § 63.2380 instead of the requirements in § 63.987 and the provisions regarding flare compliance assessments at § 63.997(a), (b), and (c).

(l) *Startup, shutdown, and malfunction*. Beginning no later than the compliance dates specified in § 63.2342(e), the referenced provisions specified in paragraphs (l)(1) through (20) of this section do not apply when demonstrating compliance with subpart H of this part, subpart SS of this part, subpart TT of this part, and subpart UU of this part.

(1) The second sentence of § 63.181(d)(5)(i).

(2) The second sentence of § 63.983(a)(5).

(3) The phrase ''except during periods of start-up, shutdown, and malfunction as specified in the referencing subpart'' in § 63.984(a).

(4) The phrase ''except during periods of start-up, shutdown and malfunction as specified in the referencing subpart'' in § 63.985(a).

(5) The phrase ''other than start-ups, shutdowns, or malfunctions'' in § 63.994(c)(1)(ii)(D).

(6) § 63.996(c)(2)(ii).

(7) The last sentence of § 63.997(e)(1)(i).

(8) § 63.998(b)(2)(iii).

(9) The phrase ''other than periods of start-ups, shutdowns or malfunctions'' from § 63.998(b)(5)(i)(A).

(10) The phrase ''other than a start-up, shutdown or malfunction'' from § 63.998(b)(5)(i)(B)(3).

(11) The phrase ''other than periods of start-ups, shutdowns or malfunctions'' from § 63.998(b)(5)(i)(C).

(12) The phrase ''other than a start-up, shutdown or malfunction'' from § 63.998(b)(5)(ii)(C).

(13) The phrase '', except as provided in paragraphs (b)(6)(i)(A) and (B) of this section'' from § 63.998(b)(6)(i).

(14) The second sentence of § 63.998(b)(6)(ii).

(15) § 63.998(c)(1)(ii)(D), (E), (F), and (G).

(16) § 63.998(d)(3).

(17) The phrase ''may be included as part of the startup, shutdown, and malfunction plan, as required by the referencing subpart for the source, or'' from § 63.1005(e)(4)(i).

(18) The phrase ''may be included as part of the startup, shutdown, and malfunction plan, as required by the referencing subpart for the source, or'' from § 63.1024(f)(4)(i).

(19) The phrase ''(except periods of startup, shutdown, or malfunction)'' from § 63.1007(e)(1)(ii)(A).

sfrattini on LAPJZKW1R2 with $$_JOB
VerDate Sep<11>2014 09:16 Apr 04, 2023 Jkt 256165 PO 00000 Frm 00386 Fmt 8010 Sfmt 8010 Q:\40\256165.XXX PC31

(20) The phrase ''(except periods of startup, shutdown, or malfunction)'' from § 63.1026(e)(1)(ii)(A).

[69 FR 5063, Feb. 3, 2004, as amended at 71 FR 42908, July 28, 2006; 73 FR 40981, July 17, 2008; 73 FR 21830, Apr. 23, 2008; 85 FR 40761, July 7, 2020]

GENERAL COMPLIANCE REQUIREMENTS

§ 63.2350 What are my general requirements for complying with this subpart?

(a) You must be in compliance with the emission limitations, operating limits, and work practice standards in this subpart at all times when the equipment identified in § 63.2338(b)(1) through (5) is in OLD operation.

(b) Except as specified in paragraph (d) of this section, you must always operate and maintain your affected source, including air pollution control and monitoring equipment, according to the provisions in § 63.6(e)(1)(i).

(c) Except for emission sources not required to be controlled as specified in § 63.2343, you must develop a written startup, shutdown, and malfunction (SSM) plan according to the provisions in § 63.6(e)(3). Beginning no later than July 7, 2023, this paragraph no longer applies; however, for historical compliance purposes, a copy of the plan must be retained and available according to the requirements in § 63.2394(c) for five years after July 7, 2023.

(d) Beginning no later than the compliance dates specified in § 63.2342(e), paragraph (b) of this section no longer applies. Instead, at all times, you must operate and maintain any affected source, including associated air pollution control equipment and monitoring equipment, in a manner consistent with safety and good air pollution control practices for minimizing emissions. The general duty to minimize emissions does not require you to make any further efforts to reduce emissions if levels required by the applicable standard have been achieved. Determination of whether a source is operating in compliance with operation and maintenance requirements will be based on information available to the Administrator which may include, but is not limited to, monitoring results, review of operation and maintenance procedures, review of operation and maintenance records, and inspection of the source.

[85 FR 40763, July 7, 2020]

TESTING AND INITIAL COMPLIANCE REQUIREMENTS

§ 63.2354 What performance tests, design evaluations, and performance evaluations must I conduct?

(a)(1) For each performance test that you conduct, you must use the procedures specified in subpart SS of this part and the provisions specified in paragraph (b) of this section.

(2) For each design evaluation you conduct, you must use the procedures specified in subpart SS of this part. You must also comply with the requirements specified in § 63.2346(l).

(3) For each performance evaluation of a continuous emission monitoring system (CEMS) you conduct, you must follow the requirements in § 63.8(e) and paragraph (d) of this section. For CEMS installed after the compliance date specified in § 63.2342(e), conduct a performance evaluation of each CEMS within 180 days of installation of the monitoring system.

(b)(1) Except as specified in paragraph (b)(6) of this section, for nonflare control devices, you must conduct each performance test according to the requirements in § 63.7(e)(1), and either § 63.988(b), § 63.990(b), or § 63.995(b), using the procedures specified in § 63.997(e).

(2) You must conduct three separate test runs for each performance test on a nonflare control device as specified in §§ 63.7(e)(3) and 63.997(e)(1)(v). Each test run must last at least 1 hour, except as provided in § 63.997(e)(1)(v)(A) and (B).

(3)(i) In addition to Method 25 or 25A (40 CFR part 60, appendix A–7), to determine compliance with the TOC emission limit, you may use Method 18 (40 CFR part 60, appendix A–6) or Method 320 of appendix A to this part to determine compliance with the total organic HAP emission limit. You may not use Method 18 or Method 320 of appendix A to this part if the control device is a combustion device, and you must not use Method 320 of appendix A to this part if the gas stream contains

sfrattini on LAPJZKW1R2 with $$_JOB
VerDate Sep<11>2014 09:16 Apr 04, 2023 Jkt 256165 PO 00000 Frm 00387 Fmt 8010 Sfmt 8010 Q:\40\256165.XXX PC31

entrained water droplets. All compounds quantified by Method 320 of appendix A to this part must be validated according to Section 13.0 of Method 320 of appendix A to this part. As an alternative to Method 18, for determining compliance with the total organic HAP emission limit, you may use ASTM D6420–18 (incorporated by reference, see § 63.14), under the conditions specified in paragraph (b)(3)(ii) of this section.

(A) If you use Method 18 (40 CFR 60, appendix A–6) or Method 320 of appendix A to this part to measure compliance with the percentage efficiency limit, you must first determine which organic HAP are present in the inlet gas stream (*i.e.*, uncontrolled emissions) using knowledge of the organic liquids or the screening procedure described in Method 18. In conducting the performance test, you must analyze samples collected simultaneously at the inlet and outlet of the control device. Quantify the emissions for the same organic HAP identified as present in the inlet gas stream for both the inlet and outlet gas streams of the control device.

(B) If you use Method 18 (40 CFR part 60, appendix A–6) or Method 320 of appendix A to this part, to measure compliance with the emission concentration limit, you must first determine which organic HAP are present in the inlet gas stream using knowledge of the organic liquids or the screening procedure described in Method 18. In conducting the performance test, analyze samples collected as specified in Method 18 at the outlet of the control device. Quantify the control device outlet emission concentration for the same organic HAP identified as present in the inlet or uncontrolled gas stream.

(ii) You may use ASTM D6420–18 (incorporated by reference, see § 63.14), to determine compliance with the total organic HAP emission limit if the target concentration for each HAP is between 150 parts per billion by volume and 100 ppmv and either of the conditions specified in paragraph (b)(2)(ii)(A) or (B) of this section exists. For target compounds not listed in Section 1.1 of ASTM D6420–18 and not amenable to detection by mass spectrometry, you may not use ASTM D6420–18.

(A) The target compounds are those listed in Section 1.1 of ASTM D6420–18 (incorporated by reference, see § 63.14); or

(B) For target compounds not listed in Section 1.1 of ASTM D6420–18 (incorporated by reference, see § 63.14), but potentially detected by mass spectrometry, you must demonstrate recovery of the compound and the additional system continuing calibration check after each run, as detailed in ASTM D6420–18, Section 10.5.3, must be followed, met, documented, and submitted with the data report, even if there is no moisture condenser used or the compound is not considered water-soluble.

(iii) You may use ASTM D6348–12e1 (incorporated by reference, see § 63.14) instead of Method 320 of appendix A to this part under the conditions specified in footnote 4 of Table 5 to this subpart.

(4) If a principal component of the uncontrolled or inlet gas stream to the control device is formaldehyde, you must use Method 316 of appendix A to this part, Method 320 of appendix A to this part, or Method 323 of appendix A to this part for measuring the formaldehyde, except you must not use Method 320 or Method 323 of appendix A to this part if the gas stream contains entrained water droplets. If you use Method 320 of appendix A to this part, formaldehyde must be validated according to Section 13.0 of Method 320 of appendix A to this part. You must measure formaldehyde either at the inlet and outlet of the control device to determine control efficiency or at the outlet of a combustion device for determining compliance with the emission concentration limit. You may use ASTM D6348–12e1 (incorporated by reference, see § 63.14) instead of Method 320 of appendix A to this part under the conditions specified in footnote 4 of Table 5 to this subpart.

(5) Except as specified in paragraph (b)(6) of this section, you may not conduct performance tests during periods of SSM, as specified in § 63.7(e)(1).

(6) Beginning no later than the compliance dates specified in § 63.2342(e), paragraphs (b)(1) and (5) of this section no longer apply. Instead, you must conduct each performance test according

sfrattini on LAPJZKW1R2 with $$_JOB
VerDate Sep<11>2014 09:16 Apr 04, 2023 Jkt 256165 PO 00000 Frm 00388 Fmt 8010 Sfmt 8010 Q:\40\256165.XXX PC31

to the requirements in paragraphs (b)(6)(i) and (ii) of this section.

(i) In lieu of the requirements specified in §63.7(e)(1), you must conduct performance tests under such conditions as the Administrator specifies based on representative performance of the affected source for the period being tested. Representative conditions exclude periods of startup and shutdown. You may not conduct performance tests during periods of malfunction. You must record the process information that is necessary to document operating conditions during the test and include in such record an explanation to support that such conditions represent normal operation. Upon request, you must make available to the Administrator such records as may be necessary to determine the conditions of performance tests.

(ii) Pursuant to paragraph (b)(6)(i) of this section, you must conduct each performance test according to the requirements in either §63.988(b), §63.990(b), or §63.995(b), using the procedures specified in §63.997(e). You must also comply with the requirements specified in §63.2346(l).

(c) To determine the HAP content of the organic liquid, you may use Method 311 of appendix A to this part, ASTM D6886–18 (incorporated by reference, see §63.14), or other method approved by the Administrator. If you use ASTM D6886–18 to determine the HAP content, you must use either Method B or Method B in conjunction with Method C, as described in section 4.3 of ASTM D6886–18. In addition, you may use other means, such as voluntary consensus standards, safety data sheets (SDS), or certified product data sheets, to determine the HAP content of the organic liquid. If the method you select to determine the HAP content provides HAP content ranges, you must use the upper end of each HAP content range in determining the total HAP content of the organic liquid. The EPA may require you to test the HAP content of an organic liquid using Method 311 of appendix A to this part or other method approved by the Administrator. For liquids that contain any amount of formaldehyde or carbon tetrachloride, you may not use Method 311of appendix A to this part. If the results of the Method 311 of appendix A to this part (or any other approved method) are different from the HAP content determined by another means, the Method 311 of appendix A to this part (or approved method) results will govern. For liquids that contain any amount of formaldehyde or carbon tetrachloride, if the results of ASTM D6886–18 using method B or C in section 4.3 (or any other approved method) are different from the HAP content determined by another means, ASTM D6886–18 using method B or C in section 4 (or approved method) results will govern.

(d) Each VOC CEMS must be installed, operated, and maintained according to the requirements of one of the following performance specifications in appendix B to part 60 of this chapter: Performance Specification 8, Performance Specification 8A, Performance Specification 9, or Performance Specification 15. You must also comply with the requirements of procedure 1 of appendix F to part 60 of this chapter, for CEMS using Performance Specification 8 or 8A.

(1) For CEMS using Performance Specification 9 or 15 (40 CFR part 60, appendix B), determine the target analyte(s) for calibration using either process knowledge or the screening procedures of Method 18 (40 CFR part 60, appendix A–6).

(2) For CEMS using Performance Specification 8A (40 CFR part 60, appendix B), conduct the relative accuracy test audits required under Procedure 1 (40 CFR part 60, appendix F) in accordance with Sections 8 and 11 of Performance Specification 8 (40 CFR part 60, appendix B). The relative accuracy must meet the criteria of Section 13.2 of Performance Speciation 8 (40 CFR part 60, appendix B).

(3) For CEMS using Performance Specification 8 or 8A of 40 CFR part 60, appendix B, calibrate the instrument on methane and report the results as carbon (C1). Use Method 25A of 40 CFR part 60, appendix A–7 as the reference method for the relative accuracy tests.

(4) If you are required to monitor oxygen in order to conduct concentration corrections, you must use Performance Specification 3 (40 CFR part 60, appendix B), to certify your oxygen CEMS, and you must comply with procedure 1

sfrattini on LAPJZKW1R2 with $$_JOB
VerDate Sep<11>2014 09:16 Apr 04, 2023 Jkt 256165 PO 00000 Frm 00389 Fmt 8010 Sfmt 8010 Q:\40\256165.XXX PC31

(40 CFR part 60, appendix F). Use Method 3A (40 CFR part 60, appendix A–2), as the reference method when conducting a relative accuracy test audit.

[69 FR 5063, Feb. 3, 2004, as amended at 85 FR 40763, July 7, 2020]

§ 63.2358 By what date must I conduct performance tests and other initial compliance demonstrations?

(a) You must conduct initial performance tests and design evaluations according to the schedule in § 63.7(a)(2), or by the compliance date specified in any applicable State or Federal new source review construction permit to which the affected source is already subject, whichever is earlier.

(b)(1) For storage tanks and transfer racks at existing affected sources complying with the emission limitations listed in Table 2 to this subpart, you must demonstrate initial compliance with the emission limitations within 180 days after February 5, 2007, except as provided in paragraphs (b)(1)(i) and (b)(1)(ii) of this section.

(i) For storage tanks with an existing internal or external floating roof, complying with item 1.a.ii. in Table 2 to this subpart and item 1.a. in Table 4 to this subpart, you must conduct your initial compliance demonstration the next time the storage tank is emptied and degassed, but not later than February 3, 2014.

(ii) For storage tanks complying with item 1.a.ii. or 6.a.ii in Table 2 of this subpart and item 1.b., 1.c., or 2. in Table 4 of this subpart, you must comply within 180 days after April 25, 2011.

(2) For storage tanks and transfer racks at reconstructed or new affected sources complying with the emission limitations listed in Table 2 to this subpart, you must conduct your initial compliance demonstration with the emission limitations within 180 days after the initial startup date for the affected source or February 3, 2004, whichever is later.

(3) For storage tanks at existing affected sources that commenced construction or reconstruction on or before October 21, 2019, you must demonstrate initial compliance with the emission limitations listed in Table 2b to this subpart within 180 days of either the initial startup or July 7, 2023, whichever is later, except as provided in paragraphs (b)(3)(i) and (ii) of this section.

(i) For storage tanks with an existing internal or external floating roof, complying with item 1.a.ii. in Table 2b to this subpart and item 1.a. in Table 4 to this subpart, you must conduct your initial compliance demonstration the next time the storage tank is emptied and degassed, but not later than July 7, 2030.

(ii) For storage tanks complying with item 1.a.ii. in Table 2b to this subpart and item 1.b. or 1.c. in Table 4 to this subpart, you must comply within 180 days after July 7, 2023.

(c)(1) For storage tanks at existing affected sources complying with the work practice standard in Table 4 to this subpart, you must conduct your initial compliance demonstration as specified in paragraphs (c)(1)(i) and (c)(1)(ii) of this section.

(i) For storage tanks with an existing internal or external floating roof, complying with item 1.a. in Table 4 of this subpart, you must conduct your initial compliance demonstration the next time the storage tank is emptied and degassed, but not later than February 3, 2014.

(ii) For other storage tanks not specified in paragraph (c)(1)(i) of this section, you must comply within 180 days after April 25, 2011.

(2) For transfer racks and equipment leak components at existing affected sources complying with the work practice standards in Table 4 to this subpart, you must conduct your initial compliance demonstration within 180 days after February 5, 2007.

(d) For storage tanks, transfer racks, and equipment leak components at reconstructed or new affected sources complying with the work practice standards in Table 4 to this subpart, you must conduct your initial compliance demonstration within 180 days after the initial startup date for the affected source.

[69 FR 5063, Feb. 3, 2004, as amended at 73 FR 40981, July 17, 2008; 85 FR 40765, July 7, 2020]

§ 63.2362 When must I conduct subsequent performance tests?

(a) For nonflare control devices, you must conduct subsequent performance

sfrattini on LAPJZKW1R2 with $$_JOB
VerDate Sep<11>2014 09:16 Apr 04, 2023 Jkt 256165 PO 00000 Frm 00390 Fmt 8010 Sfmt 8010 Q:\40\256165.XXX PC31

testing required in Table 5 to this subpart, item 1, at any time the EPA requests you to in accordance with section 114 of the CAA.

(b)(1) For each transport vehicle that you own that is equipped with vapor collection equipment and that is loaded with organic liquids at a transfer rack that is subject to control based on the criteria specified in Table 2 to this subpart, items 7 through 10, you must perform the vapor tightness testing required in Table 5 to this subpart, item 2, on that transport vehicle at least once per year.

(2) For transport vehicles that you own that do not have vapor collection equipment, you must maintain current certification in accordance with the U.S. DOT qualification and maintenance requirements in 49 CFR part 180, subparts E (cargo tanks) and F (tank cars).

[69 FR 5063, Feb. 3, 2004, as amended at 71 FR 42910, July 28, 2006; 85 FR 40765, July 7, 2020]

§63.2366 What are my monitoring installation, operation, and maintenance requirements?

(a) You must install, operate, and maintain a continuous monitoring system (CMS) on each control device required in order to comply with this subpart. If you use a continuous parameter monitoring system (CPMS) (as defined in §63.981), you must comply with §63.2346(l) and the applicable requirements for CPMS in subpart SS of this part and §63.671, for the control device being used. If you use a CEMS, you must install, operate, and maintain the CEMS according to the requirements in §63.8 and paragraph (d) of this section, except as specified in paragraph (c) of this section.

(b) For nonflare control devices controlling storage tanks and low throughput transfer racks, you must submit a monitoring plan according to the requirements in subpart SS of this part, for monitoring plans. You must also comply with the requirements specified in §63.2346(l).

(c) Beginning no later than the compliance dates specified in §63.2342(e), you must keep the written procedures required by §63.8(d)(2) on record for the life of the affected source or until the affected source is no longer subject to the provisions of this part, to be made available for inspection, upon request, by the Administrator. If the performance evaluation plan is revised, you must keep previous (*i.e.*, superseded) versions of the performance evaluation plan on record to be made available for inspection, upon request, by the Administrator, for a period of 5 years after each revision to the plan. The program of corrective action should be included in the plan required under §63.8(d)(2). In addition to the information required in §63.8(d)(2), your written procedures for CEMS must include the information in paragraphs (c)(1) through (6) of this section:

(1) Description of CEMS installation location.

(2) Description of the monitoring equipment, including the manufacturer and model number for all monitoring equipment components and the span of the analyzer.

(3) Routine quality control and assurance procedures.

(4) Conditions that would trigger a CEMS performance evaluation, which must include, at a minimum, a newly installed CEMS; a process change that is expected to affect the performance of the CEMS; and the Administrator's request for a performance evaluation under section 114 of the Clean Air Act.

(5) Ongoing operation and maintenance procedures in accordance with the general requirements of §63.8(c)(1) and (3), (c)(4)(ii), and (c)(7) and (8);

(6) Ongoing recordkeeping and reporting procedures in accordance with the general requirements of §63.10(c) and (e)(1).

(d) For each CEMS, you must locate the sampling probe or other interface at a measurement location such that you obtain representative measurements of emissions from the regulated source and comply with the applicable requirements specified in §63.2354(d).

[85 FR 40765, July 7, 2020]

§63.2370 How do I demonstrate initial compliance with the emission limitations, operating limits, and work practice standards?

(a) You must demonstrate initial compliance with each emission limitation and work practice standard that

sfrattini on LAPJZKW1R2 with $$_JOB
VerDate Sep<11>2014 09:16 Apr 04, 2023 Jkt 256165 PO 00000 Frm 00391 Fmt 8010 Sfmt 8010 Q:\40\256165.XXX PC31

applies to you as specified in Tables 6 and 7 to this subpart.

(b) You demonstrate initial compliance with the operating limits requirements specified in § 63.2346(e) by establishing the operating limits during the initial performance test or design evaluation.

(c) You must submit the results of the initial compliance determination in the Notification of Compliance Status according to the requirements in § 63.2382(d). If the initial compliance determination includes a performance test and the results are submitted electronically via the Compliance and Emissions Data Reporting Interface (CEDRI) in accordance with § 63.2386(g), the unit(s) tested, the pollutant(s) tested, and the date that such performance test was conducted may be submitted in the Notification of Compliance Status in lieu of the performance test results. The performance test results must be submitted to CEDRI by the date the Notification of Compliance Status is submitted.

[69 FR 5063, Feb. 3, 2004, as amended at 85 FR 40765, July 7, 2020]

CONTINUOUS COMPLIANCE REQUIREMENTS

§ 63.2374 When do I monitor and collect data to demonstrate continuous compliance and how do I use the collected data?

(a) You must monitor and collect data according to subpart SS of this part, and paragraphs (b) and (c) of this section. You must also comply with the requirements specified in § 63.2346(l).

(b) When using a control device to comply with this subpart, you must monitor continuously or collect data at all required intervals at all times that the emission source and control device are in OLD operation, except for CMS malfunctions (including any malfunction preventing the CMS from operating properly), associated repairs, and required quality assurance or control activities (including, as applicable, calibration checks and required zero and span adjustments).

(c) Do not use data recorded during CMS malfunctions, associated repairs, required quality assurance or control activities, or periods when emissions from organic liquids are not routed to the control device in data averages and calculations used to report emission or operating levels. Do not use such data in fulfilling a minimum data availability requirement, if applicable. You must use all of the data collected during all other periods, including periods of SSM, in assessing the operation of the control device.

[69 FR 5063, Feb. 3, 2004, as amended at 85 FR 40765, July 7, 2020]

§ 63.2378 How do I demonstrate continuous compliance with the emission limitations, operating limits, and work practice standards?

(a) You must demonstrate continuous compliance with each emission limitation, operating limit, and work practice standard in Tables 2 through 4 to this subpart that applies to you according to the methods specified in subpart SS of this part, and in Tables 8 through 10 to this subpart, as applicable. You must also comply with the requirements specified in § 63.2346(l).

(b) Except as specified in paragraph (e) of this section, you must follow the requirements in § 63.6(e)(1) and (3) during periods of startup, shutdown, malfunction, or nonoperation of the affected source or any part thereof. In addition, the provisions of paragraphs (b)(1) through (3) of this section apply.

(1) The emission limitations in this subpart apply at all times except during periods of nonoperation of the affected source (or specific portion thereof) resulting in cessation of the emissions to which this subpart applies. The emission limitations of this subpart apply during periods of SSM, except as provided in paragraphs (b)(2) and (3) of this section. However, if a SSM, or period of nonoperation of one portion of the affected source does not affect the ability of a particular emission source to comply with the emission limitations to which it is subject, then that emission source is still required to comply with the applicable emission limitations of this subpart during the startup, shutdown, malfunction, or period of nonoperation.

(2) The owner or operator must not shut down control devices or monitoring systems that are required or utilized for achieving compliance with

sfrattini on LAPJZKW1R2 with $$_JOB
VerDate Sep<11>2014 09:16 Apr 04, 2023 Jkt 256165 PO 00000 Frm 00392 Fmt 8010 Sfmt 8010 Q:\40\256165.XXX PC31

this subpart during periods of SSM while emissions are being routed to such items of equipment if the shutdown would contravene requirements of this subpart applicable to such items of equipment. This paragraph (b)(2) does not apply if the item of equipment is malfunctioning. This paragraph (b)(2) also does not apply if the owner or operator shuts down the compliance equipment (other than monitoring systems) to avoid damage due to a contemporaneous SSM of the affected source or portion thereof. If the owner or operator has reason to believe that monitoring equipment would be damaged due to a contemporaneous SSM of the affected source of portion thereof, the owner or operator must provide documentation supporting such a claim in the next Compliance report required in Table 11 to this subpart, item 1. Once approved by the Administrator, the provision for ceasing to collect, during a SSM, monitoring data that would otherwise be required by the provisions of this subpart must be incorporated into the SSM plan.

(3) During SSM, you must implement, to the extent reasonably available, measures to prevent or minimize excess emissions. For purposes of this paragraph (b)(3), the term ''excess emissions'' means emissions greater than those allowed by the emission limits that apply during normal operational periods. The measures to be taken must be identified in the SSM plan, and may include, but are not limited to, air pollution control technologies, recovery technologies, work practices, pollution prevention, monitoring, and/or changes in the manner of operation of the affected source. Backup control devices are not required, but may be used if available.

(c) Except as specified in paragraph (e) of this section, periods of planned routine maintenance of a control device used to control storage tanks or transfer racks, during which the control device does not meet the emission limits in Table 2 to this subpart, must not exceed 240 hours per year.

(d) Except as specified in paragraph (e) of this section, if you elect to route emissions from storage tanks or transfer racks to a fuel gas system or to a process, as allowed by §63.982(d), to comply with the emission limits in Table 2 to this subpart, the total aggregate amount of time during which the emissions bypass the fuel gas system or process during the calendar year without being routed to a control device, for all reasons (except SSM or product changeovers of flexible operation units and periods when a storage tank has been emptied and degassed), must not exceed 240 hours.

(e) Beginning no later than the compliance dates specified in §63.2342(e), paragraphs (b) through (d) of this section no longer apply. Instead, you must be in compliance with each emission limitation, operating limit, and work practice standard specified in paragraph (a) of this section at all times, except during periods of nonoperation of the affected source (or specific portion thereof) resulting in cessation of the emissions to which this subpart applies and must comply with the requirements specified in paragraphs (e)(1) through (5) of this section, as applicable. Equipment subject to the work practice standards for equipment leak components in Table 4 to this subpart, item 4 are not subject to this paragraph (e).

(1) Except as specified in paragraphs (e)(3) through (5) of this section, the use of a bypass line at any time on a closed vent system to divert a vent stream to the atmosphere or to a control device not meeting the requirements specified in paragraph (a) of this section is an emissions standards deviation.

(2) If you are subject to the bypass monitoring requirements of §63.983(a)(3), then you must continue to comply with the requirements in §63.983(a)(3) and the recordkeeping and reporting requirements in §§63.998(d)(1)(ii) and 63.999(c)(2), in addition to §63.2346(l), the recordkeeping requirements specified in §63.2390(g), and the reporting requirements specified in §63.2386(c)(12).

(3) Periods of planned routine maintenance of a control device used to control storage tank breathing loss emissions, during which the control device does not meet the emission limits in Table 2 or 2b to this subpart, must not exceed 240 hours per year. The level of material in the storage vessel shall not

sfrattini on LAPJZKW1R2 with $$_JOB
VerDate Sep<11>2014 09:16 Apr 04, 2023 Jkt 256165 PO 00000 Frm 00393 Fmt 8010 Sfmt 8010 Q:\40\256165.XXX PC31

be increased during periods that the closed-vent system or control device is bypassed to perform routine maintenance.

(4) If you elect to route emissions from storage tanks to a fuel gas system or to a process, as allowed by § 63.982(d), to comply with the emission limits in Table 2 or 2b to this subpart, the total aggregate amount of time during which the breathing loss emissions bypass the fuel gas system or process during the calendar year without being routed to a control device, for all reasons (except product changeovers of flexible operation units and periods when a storage tank has been emptied and degassed), must not exceed 240 hours. The level of material in the storage vessel shall not be increased during periods that the fuel gas system or process is bypassed to perform routine maintenance.

(f) The CEMS data must be reduced to daily averages computed using valid data consistent with the data availability requirements specified in § 63.999(c)(6)(i)(B) through (D), except monitoring data also are sufficient to constitute a valid hour of data if measured values are available for at least two of the 15-minute periods during an hour when calibration, quality assurance, or maintenance activities are being performed. In computing daily averages to determine compliance with this subpart, you must exclude monitoring data recorded during CEMS breakdowns, out of control periods, repairs, maintenance periods, calibration checks, or other quality assurance activities.

[69 FR 5063, Feb. 3, 2004, as amended at 71 FR 20463, Apr. 20, 2006; 85 FR 40766, July 7, 2020]

§ 63.2380 What are my requirements for certain flares?

(a) Beginning no later than the compliance dates specified in § 63.2342(e), if you reduce organic HAP emissions by venting emissions through a closed vent system to a steam-assisted, air-assisted, or non-assisted flare to control emissions from a storage tank, low throughput transfer rack, or high throughput transfer rack that is subject to control based on the criteria specified in Tables 2 or 2b to this subpart, then the flare requirements specified in § 63.11(b); subpart SS of this part; the provisions specified in items 7.a through 7.d of Table 3 to this subpart; Table 8 to this subpart; and the provisions specified in items 1.a.iii and 2.a.iii, and items 7.a through 7.d.2 of Table 9 to this subpart no longer apply. Instead, you must meet the applicable requirements for flares as specified in §§ 63.670 and 63.671, including the provisions in Tables 12 and 13 to subpart CC of this part, except as specified in paragraphs (b) through (m) of this section. For purposes of compliance with this paragraph, the following terms are defined in § 63.641: Assist air, assist steam, center steam, combustion zone, combustion zone gas, flare, flare purge gas, flare supplemental gas, flare sweep gas, flare vent gas, lower steam, net heating value, perimeter assist air, pilot gas, premix assist air, total steam, and upper steam.

(b) The following phrases in § 63.670(c) do not apply:

(1) ''Specify the smokeless design capacity of each flare and''; and

(2) ''And the flare vent gas flow rate is less than the smokeless design capacity of the flare.''

(c) The phrase ''and the flare vent gas flow rate is less than the smokeless design capacity of the flare'' in § 63.670(d) does not apply.

(d) Section 63.670(j)(6)(ii) does not apply. Instead submit the information required by § 63.670(j)(6)(ii) with the Notification of Compliance Status according to § 63.2382(d)(2)(ix).

(e) Section 63.670(o) does not apply.

(f) Substitute ''pilot flame or flare flame'' or each occurrence of ''pilot flame.''

(g) Substitute ''affected source'' for each occurrence of ''petroleum refinery.''

(h) Each occurrence of ''refinery'' does not apply.

(i) You may elect to comply with the alternative means of emissions limitation requirements specified in § 63.670(r)in lieu of the requirements in § 63.670(d) through (f), as applicable. However, instead of complying with § 63.670(r)(3)(iii), you must also submit the alternative means of emissions limitation request to the following address: U.S. Environmental Protection Agency, Office of Air Quality Planning and Standards, Sector Policies and

sfrattini on LAPJZKW1R2 with $$_JOB
VerDate Sep<11>2014 09:16 Apr 04, 2023 Jkt 256165 PO 00000 Frm 00394 Fmt 8010 Sfmt 8010 Q:\40\256165.XXX PC31

Programs Division, U.S. EPA Mailroom (E143–01), Attention: Organic Liquids Distribution Sector Lead, 109 T.W. Alexander Drive, Research Triangle Park, NC 27711. Electronic copies in lieu of hard copies may also be submitted to *oldrtr@epa.gov*.

(j) If you choose to determine compositional analysis for net heating value with a continuous process mass spectrometer, then you must comply with the requirements specified in paragraphs (j)(1) through (7) of this section.

(1) You must meet the requirements in §63.671(e)(2). You may augment the minimum list of calibration gas components found in §63.671(e)(2) with compounds found during a pre-survey or known to be in the gas through process knowledge.

(2) Calibration gas cylinders must be certified to an accuracy of 2 percent and traceable to National Institute of Standards and Technology (NIST) standards.

(3) For unknown gas components that have similar analytical mass fragments to calibration compounds, you may report the unknowns as an increase in the overlapped calibration gas compound. For unknown compounds that produce mass fragments that do not overlap calibration compounds, you may use the response factor for the nearest molecular weight hydrocarbon in the calibration mix to quantify the unknown component's NHVvg.

(4) You may use the response factor for n-pentane to quantify any unknown components detected with a higher molecular weight than n-pentane.

(5) You must perform an initial calibration to identify mass fragment overlap and response factors for the target compounds.

(6) You must meet applicable requirements in Performance Specification (PS) 9 (40 CFR part 60, appendix B) for continuous monitoring system acceptance including, but not limited to, performing an initial multi-point calibration check at three concentrations following the procedure in Section 10.1 of PS 9 and performing the periodic calibration requirements listed for gas chromatographs in Table 13 to subpart CC of this part, for the process mass spectrometer. You may use the alternative sampling line temperature allowed under Net Heating Value by Gas Chromatograph in Table 13 to subpart CC of this part.

(7) The average instrument calibration error (CE) for each calibration compound at any calibration concentration must not differ by more than 10 percent from the certified cylinder gas value. The CE for each component in the calibration blend must be calculated using the following equation:

$$CE = \frac{C_m - C_a}{Ca} x\ 100$$

Where:

Cm = Average instrument response (ppm)

Ca = Certified cylinder gas value (ppm)

(k) If you use a gas chromatograph or mass spectrometer for compositional analysis for net heating value, then you may choose to use the CE of NHV measured versus the cylinder tag value NHV as the measure of agreement for daily calibration and quarterly audits in lieu of determining the compound-specific CE. The CE for NHV at any calibration level must not differ by more than 10 percent from the certified cylinder gas value. The CE for must be calculated using the following equation:

$$CE = \frac{NHV_{measured} - NHV_a}{NHV_a} x\ 100$$

sfrattini on LAPJZKW1R2 with $$_JOB
VerDate Sep<11>2014 09:16 Apr 04, 2023 Jkt 256165 PO 00000 Frm 00395 Fmt 8010 Sfmt 8006 Q:\40\256165.XXX PC31
ER07JY20.001</GPH> ER07JY20.000</GPH>

Where:

NHVmeasured = Average instrument response (Btu/scf)

NHVa = Certified cylinder gas value (Btu/scf)

(l) Instead of complying with § 63.670(p), you must keep the flare monitoring records specified in § 63.2390(h).

(m) Instead of complying with § 63.670(q), you must comply with the reporting requirements specified in § 63.2382(d)(2)(ix) and § 63.2386(d)(5).

[85 FR 40766, July 7, 2020]

NOTIFICATIONS, REPORTS, AND RECORDS

§ 63.2382 What notifications must I submit and when and what information should be submitted?

(a) You must submit each notification in subpart SS of this part, Table 12 to this subpart, and paragraphs (b) through (d) of this section that applies to you. You must submit these notifications according to the schedule in Table 12 to this subpart and as specified in paragraphs (b) through (d) of this section. You must also comply with the requirements specified in § 63.2346(l).

(b) *Initial Notification.* (1) If you startup your affected source before February 3, 2004, you must submit the Initial Notification no later than 120 calendar days after February 3, 2004, or no later than 120 days after the source becomes subject to this subpart, whichever is later.

(2) If you startup your new or reconstructed affected source on or after February 3, 2004, you must submit the Initial Notification no later than 120 days after initial startup, or no later than 120 days after the source becomes subject to this subpart, whichever is later.

(c) If you are required to conduct a performance test, you must submit the Notification of Intent to conduct the test at least 60 calendar days before it is initially scheduled to begin as required in § 63.7(b)(1).

(d)(1) *Notification of Compliance Status.* If you are required to conduct a performance test, design evaluation, or other initial compliance demonstration as specified in Table 5, 6, or 7 to this subpart, you must submit a Notification of Compliance Status.

(2) *Notification of Compliance Status requirements.* The Notification of Compliance Status must include the information required in § 63.999(b) and in paragraphs (d)(2)(i) through (ix) of this section.

(i) The results of any applicability determinations, emission calculations, or analyses used to identify and quantify organic HAP emissions from the affected source.

(ii) The results of emissions profiles, performance tests, engineering analyses, design evaluations, flare compliance assessments, inspections and repairs, and calculations used to demonstrate initial compliance according to Tables 6 and 7 to this subpart. For performance tests, results must include descriptions of sampling and analysis procedures and quality assurance procedures. If performance test results are submitted electronically via CEDRI in accordance with § 63.2386(g), the unit(s) tested, the pollutant(s) tested, and the date that such performance test was conducted may be submitted in the Notification of Compliance Status in lieu of the performance test results. The performance test results must be submitted to CEDRI by the date the Notification of Compliance Status is submitted.

(iii) Descriptions of monitoring devices, monitoring frequencies, and the operating limits established during the initial compliance demonstrations, including data and calculations to support the levels you establish.

(iv) Descriptions of worst-case operating and/or testing conditions for the control device(s).

(v) Identification of emission sources subject to overlapping requirements described in § 63.2396 and the authority under which you will comply.

(vi) The applicable information specified in § 63.1039(a)(1) through (3) for all pumps and valves subject to the work practice standards for equipment leak components in Table 4 to this subpart, item 4.

(vii) If you are complying with the vapor balancing work practice standard for transfer racks according to Table 4 to this subpart, item 3.a, include a statement to that effect and a

sfrattini on LAPJZKW1R2 with $$_JOB
VerDate Sep<11>2014 09:16 Apr 04, 2023 Jkt 256165 PO 00000 Frm 00396 Fmt 8010 Sfmt 8010 Q:\40\256165.XXX PC31

statement that the pressure vent settings on the affected storage tanks are greater than or equal to 2.5 psig.

(viii) The information specified in §63.2386(c)(10)(i), unless the information has already been submitted with the first Compliance report. If the information specified in §63.2386(c)(10)(i) has already been submitted with the first Compliance report, the information specified in §63.2386(d)(3) and (4), as applicable, shall be submitted instead.

(ix) For flares subject to the requirements of §63.2380, you must also submit the information in this paragraph in a supplement to the Notification of Compliance Status within 150 days after the first applicable compliance date for flare monitoring. In lieu of the information required in §63.987(b), the Notification of Compliance Status must include flare design (*e.g.*, steam-assisted, air-assisted, or non-assisted); all visible emission readings, heat content determinations (including information required by §63.670(j)(6)(i), as applicable), flow rate measurements, and exit velocity determinations made during the initial visible emissions demonstration required by §63.670(h), as applicable; and all periods during the compliance determination when the pilot flame or flare flame is absent.

(3) *Submitting Notification of Compliance Status.* Beginning no later than the compliance dates specified in §63.2342(e), you must submit all subsequent Notification of Compliance Status reports to the EPA via CEDRI, which can be accessed through EPA's Central Data Exchange (CDX) (*https://cdx.epa.gov/*). If you claim some of the information required to be submitted via CEDRI is confidential business information (CBI), then submit a complete report, including information claimed to be CBI, to the EPA. Submit the file on a compact disc, flash drive, or other commonly used electronic storage medium and clearly mark the medium as CBI. Mail the electronic medium to U.S. Environmental Protection Agency, Office of Air Quality Planning and Standards, Sector Policies and Programs Division, U.S. EPA Mailroom (C404–02), Attention: Organic Liquids Distribution Sector Lead, 4930 Old Page Rd., Durham, NC 27703. The same file with the CBI omitted must be submitted to the EPA via EPA's CDX as described earlier in this paragraph. You may assert a claim of EPA system outage or force majeure for failure to timely comply with this reporting requirement provided you meet the requirements outlined in §63.2386(i) or (j), as applicable.

[69 FR 5063, Feb. 3, 2004, as amended at 71 FR 42910, July 28, 2006; 85 FR 40767, July 7, 2020; 85 FR 73903, Nov. 19, 2020]

§63.2386 What reports must I submit and when and what information is to be submitted in each?

(a) You must submit each report in subpart SS of this part, Table 11 to this subpart, Table 12 to this subpart, and in paragraphs (c) through (j) of this section that applies to you. You must also comply with the requirements specified in §63.2346(l).

(b) Unless the Administrator has approved a different schedule for submission of reports under §63.10(a), you must submit each report according to Table 11 to this subpart and by the dates shown in paragraphs (b)(1) through (3) of this section, by the dates shown in subpart SS of this part, and by the dates shown in Table 12 to this subpart, whichever are applicable.

(1)(i) The first Compliance report must cover the period beginning on the compliance date that is specified for your affected source in §63.2342 and ending on June 30 or December 31, whichever date is the first date following the end of the first calendar half after the compliance date that is specified for your affected source in §63.2342.

(ii) The first Compliance report must be postmarked no later than July 31 or January 31, whichever date follows the end of the first calendar half after the compliance date that is specified for your affected source in §63.2342.

(2)(i) Each subsequent Compliance report must cover the semiannual reporting period from January 1 through June 30 or the semiannual reporting period from July 1 through December 31.

(ii) Each subsequent Compliance report must be postmarked no later than July 31 or January 31, whichever date is the first date following the end of the semiannual reporting period.

sfrattini on LAPJZKW1R2 with $$_JOB
VerDate Sep<11>2014 09:16 Apr 04, 2023 Jkt 256165 PO 00000 Frm 00397 Fmt 8010 Sfmt 8010 Q:\40\256165.XXX PC31

(3) For each affected source that is subject to permitting regulations pursuant to 40 CFR part 70 or 40 CFR part 71, if the permitting authority has established dates for submitting semiannual reports pursuant to 40 CFR 70.6(a)(3)(iii)(A) or 40 CFR 71.6(a)(3)(iii)(A), you may submit the first and subsequent Compliance reports according to the dates the permitting authority has established instead of according to the dates in paragraphs (b)(1) and (2) of this section.

(c) *First Compliance report.* The first Compliance report must contain the information specified in paragraphs (c)(1) through (12) of this section, as well as the information specified in paragraph (d) of this section.

(1) Company name and address.

(2) Statement by a responsible official, including the official's name, title, and signature, certifying that, based on information and belief formed after reasonable inquiry, the statements and information in the report are true, accurate, and complete. If your report is submitted via CEDRI, the certifier's electronic signature during the submission process replaces this requirement.

(3) Date of report and beginning and ending dates of the reporting period. You are no longer required to provide the date of report when the report is submitted via CEDRI.

(4) Any changes to the information listed in § 63.2382(d)(2) that have occurred since the submittal of the Notification of Compliance Status.

(5) Except as specified in paragraph (c)(11) of this section, if you had a SSM during the reporting period and you took actions consistent with your SSM plan, the Compliance report must include the information described in § 63.10(d)(5)(i).

(6) If there are no deviations from any emission limitation or operating limit that applies to you and there are no deviations from the requirements for work practice standards, a statement that there were no deviations from the emission limitations, operating limits, or work practice standards during the reporting period.

(7) If there were no periods during which the CMS was out of control as specified in § 63.8(c)(7), a statement that there were no periods during which the CMS was out of control during the reporting period.

(8) For closed vent systems and control devices used to control emissions, the information specified in paragraphs (c)(8)(i) and (ii) of this section for those planned routine maintenance activities that would require the control device to not meet the applicable emission limit.

(i) A description of the planned routine maintenance that is anticipated to be performed for the control device during the next 6 months. This description must include the type of maintenance necessary, planned frequency of maintenance, and lengths of maintenance periods.

(ii) A description of the planned routine maintenance that was performed for the control device during the previous 6 months. This description must include the type of maintenance performed and the total number of hours during those 6 months that the control device did not meet the applicable emission limit due to planned routine maintenance.

(9) A listing of all transport vehicles into which organic liquids were loaded at transfer racks that are subject to control based on the criteria specified in Table 2 to this subpart, items 7 through 10, during the previous 6 months for which vapor tightness documentation as required in § 63.2390(c) was not on file at the facility.

(10)(i) A listing of all transfer racks (except those racks at which only unloading of organic liquids occurs) and of tanks greater than or equal to 18.9 cubic meters (5,000 gallons) that are part of the affected source but are not subject to any of the emission limitations, operating limits, or work practice standards of this subpart.

(ii) If the information specified in paragraph (c)(10)(i) of this section has already been submitted with the Notification of Compliance Status, the information specified in paragraphs (d)(3) and (4) of this section, as applicable, shall be submitted instead.

(11) Beginning no later than the compliance dates specified in § 63.2342(e), paragraph (c)(5) of this section no longer applies.

sfrattini on LAPJZKW1R2 with $$_JOB
VerDate Sep<11>2014 09:16 Apr 04, 2023 Jkt 256165 PO 00000 Frm 00398 Fmt 8010 Sfmt 8010 Q:\40\256165.XXX PC31

(12) Beginning no later than the compliance dates specified in §63.2342(e), for bypass lines subject to the requirements §63.2378(e)(1) and (2), the compliance report must include the start date, start time, duration in hours, estimate of the volume of gas in standard cubic feet (scf), the concentration of organic HAP in the gas in ppmv and the resulting mass emissions of organic HAP in pounds that bypass a control device. For periods when the flow indicator is not operating, report the start date, start time, and duration in hours.

(d) *Subsequent Compliance reports.* Subsequent Compliance reports must contain the information in paragraphs (c)(1) through (9) and paragraph (c)(12) of this section and, where applicable, the information in paragraphs (d)(1) through (5) of this section.

(1) For each deviation from an emission limitation occurring at an affected source where you are using a CMS to comply with an emission limitation in this subpart, or for each CMS that was inoperative or out of control during the reporting period, you must include in the Compliance report the applicable information in paragraphs (d)(1)(i) through (xv) of this section. This includes periods of SSM.

(i) The date and time that each malfunction started and stopped, and the nature and cause of the malfunction (if known).

(ii) The start date, start time, and duration in hours for each period that each CMS was inoperative, except for zero (low-level) and high-level checks.

(iii) The start date, start time, and duration in hours for each period that the CMS that was out of control.

(iv) Except as specified in paragraph (d)(1)(xiii) of this section, the date and time that each deviation started and stopped, and whether each deviation occurred during a period of SSM, or during another period.

(v) The total duration in hours of all deviations for each CMS during the reporting period, and the total duration as a percentage of the total emission source operating time during that reporting period.

(vi) Except as specified in paragraph (d)(1)(xiii) of this section, a breakdown of the total duration of the deviations during the reporting period into those that are due to startup, shutdown, control equipment problems, process problems, other known causes, and other unknown causes.

(vii) The total duration in hours of CMS downtime for each CMS during the reporting period, and the total duration of CMS downtime as a percentage of the total emission source operating time during that reporting period.

(viii) An identification of each organic HAP that was potentially emitted during each deviation based on the known organic HAP contained in the liquid(s).

(ix) A brief description of the emission source(s) at which the CMS deviation(s) occurred or at which the CMS was inoperative or out of control.

(x) The equipment manufacturer(s) and model number(s) of the CMS and the pollutant or parameter monitored.

(xi) The date of the latest certification or audit for each CMS.

(xii) A brief description of any changes in CMS, processes, or controls since the last reporting period.

(xiii) Beginning no later than the compliance dates specified in §63.2342(e), paragraphs (d)(1)(iv) and (vi) of this section no longer apply. For each instance, report the start date, start time, and duration in hours of each failure. For each failure, the report must include a list of the affected sources or equipment, an estimate of the quantity in pounds of each regulated pollutant emitted over any emission limit, a description of the method used to estimate the emissions, and the cause of the deviation (including unknown cause, if applicable), as applicable, and the corrective action taken.

(xiv) Corrective actions taken for a CMS that was inoperative or out of control.

(xv) Total process operating time during the reporting period.

(2) Include in the Compliance report the information in paragraphs (d)(2)(i) through (iii) of this section, as applicable.

(i) Except as specified in paragraph (d)(2)(iv) of this section, for each storage tank and transfer rack subject to control requirements, include periods of planned routine maintenance during

sfrattini on LAPJZKW1R2 with $$_JOB
VerDate Sep<11>2014 09:16 Apr 04, 2023 Jkt 256165 PO 00000 Frm 00399 Fmt 8010 Sfmt 8010 Q:\40\256165.XXX PC31

which the control device did not comply with the applicable emission limits in Table 2 to this subpart.

(ii) For each storage tank controlled with a floating roof, include a copy of the inspection record (required in § 63.1065(b)) when inspection failures occur.

(iii) If you elect to use an extension for a floating roof inspection in accordance with § 63.1063(c)(2)(iv)(B) or (e)(2), include the documentation required by those paragraphs.

(iv) Beginning no later than the compliance dates specified in § 63.2342(e), paragraph (d)(2)(i) of this section no longer applies. Instead for each storage tank subject to control requirements, include the start date, start time, end date and end time of any planned routine maintenance during which the control device used to control storage tank breathing losses did not comply with the applicable emission limits in Table 2 or 2b to this subpart.

(3)(i) Except as specified in paragraph (d)(3)(iii) of this section, a listing of any storage tank that became subject to controls based on the criteria for control specified in Table 2 to this subpart, items 1 through 6, since the filing of the last Compliance report.

(ii) A listing of any transfer rack that became subject to controls based on the criteria for control specified in Table 2 to this subpart, items 7 through 10, since the filing of the last Compliance report.

(iii) Beginning no later than the compliance dates specified in § 63.2342(e), the emission limits specified in Table 2 to this subpart for storage tanks at an existing affected source no longer apply as specified in § 63.2346(a)(5). Instead, beginning no later than the compliance dates specified in § 63.2342(e), you must include a listing of any storage tanks at an existing affected source that became subject to controls based on the criteria for control specified in Table 2b to this subpart, items 1 through 3, since the filing of the last Compliance report.

(4)(i) A listing of tanks greater than or equal to 18.9 cubic meters (5,000 gallons) that became part of the affected source but are not subject to any of the emission limitations, operating limits, or work practice standards of this subpart, since the last Compliance report.

(ii) A listing of all transfer racks (except those racks at which only the unloading of organic liquids occurs) that became part of the affected source but are not subject to any of the emission limitations, operating limits, or work practice standards of this subpart, since the last Compliance report.

(5) Beginning no later than the compliance dates specified in § 63.2342(e), for each flare subject to the requirements in § 63.2380, the compliance report must include the items specified in paragraphs (d)(5)(i) through (iii) of this section in lieu of the information required in § 63.999(c)(3).

(i) Records as specified in § 63.2390(h)(1) for each 15-minute block during which there was at least one minute when regulated material is routed to a flare and no pilot flame or flare flame is present. Include the start and stop time and date of each 15-minute block.

(ii) Visible emission records as specified in § 63.2390(h)(2)(iv) for each period of 2 consecutive hours during which visible emissions exceeded a total of 5 minutes.

(iii) The periods specified in § 63.2390(h)(6). Indicate the date and start and end time for the period, and the net heating value operating parameter(s) determined following the methods in § 63.670(k) through (n) as applicable.

(e) Each affected source that has obtained a title V operating permit pursuant to 40 CFR part 70 or 40 CFR part 71 must report all deviations as defined in this subpart in the semiannual monitoring report required by 40 CFR 70.6(a)(3)(iii)(A) or 71.6(a)(3)(iii)(A). If an affected source submits a Compliance report pursuant to Table 11 to this subpart along with, or as part of, the semiannual monitoring report required by 40 CFR 70.6(a)(3)(iii)(A) or 71.6(a)(3)(iii)(A), and the Compliance report includes all required information concerning deviations from any emission limitation in this subpart, we will consider submission of the Compliance report as satisfying any obligation to report the same deviations in the semiannual monitoring report. However, submission of a Compliance

sfrattini on LAPJZKW1R2 with $$_JOB
VerDate Sep<11>2014 09:16 Apr 04, 2023 Jkt 256165 PO 00000 Frm 00400 Fmt 8010 Sfmt 8010 Q:\40\256165.XXX PC31

report will not otherwise affect any obligation the affected source may have to report deviations from permit requirements to the applicable title V permitting authority.

(f) Beginning no later than the compliance dates specified in §63.2342(e), you must submit all Compliance reports to the EPA via CEDRI, which can be accessed through EPA's CDX (*https://cdx.epa.gov/*). You must use the appropriate electronic report template on the CEDRI website (*https://www.epa.gov/electronic-reporting-air-emissions/compliance-and-emissions-data-reporting-interface-cedri*) for this subpart. The date report templates become available will be listed on the CEDRI website. Unless the Administrator or delegated state agency or other authority has approved a different schedule for submission of reports under §§63.9(i) and 63.10(a), the report must be submitted by the deadline specified in this subpart, regardless of the method in which the report is submitted. If you claim some of the information required to be submitted via CEDRI is CBI, submit a complete report, including information claimed to be CBI, to the EPA. The report must be generated using the appropriate form on the CEDRI website or an alternate electronic file consistent with the extensible markup language (XML) schema listed on the CEDRI website. Submit the file on a compact disc, flash drive, or other commonly used electronic storage medium and clearly mark the medium as CBI. Mail the electronic medium to U.S. Environmental Protection Agency, Office of Air Quality Planning and Standards, Sector Policies and Programs Division, U.S. EPA Mailroom (C404–02), Attention: Organic Liquids Distribution Sector Lead, 4930 Old Page Rd., Durham, NC 27703. The same file with the CBI omitted must be submitted to the EPA via EPA's CDX as described earlier in this paragraph. You may assert a claim of EPA system outage or force majeure for failure to timely comply with this reporting requirement provided you meet the requirements outlined in paragraph (i) or (j) of this section, as applicable.

(g) Beginning no later than the compliance dates specified in §63.2342(e), you must start submitting performance test reports in accordance with this paragraph. Unless otherwise specified in this subpart, within 60 days after the date of completing each performance test required by this subpart, you must submit the results of the performance test following the procedures specified in paragraphs (g)(1) through (3) of this section.

(1) *Data collected using test methods supported by the EPA's Electronic Reporting Tool (ERT) as listed on the EPA's ERT website (https://www.epa.gov/electronic-reporting-air-emissions/electronic-reporting-tool-ert) at the time of the test.* Submit the results of the performance test to the EPA via CEDRI, which can be accessed through the EPA's CDX (*https://cdx.epa.gov/*). The data must be submitted in a file format generated through the use of the EPA's ERT. Alternatively, you may submit an electronic file consistent with the XML schema listed on the EPA's ERT website.

(2) *Data collected using test methods that are not supported by the EPA's ERT as listed on the EPA's ERT website at the time of the test.* The results of the performance test must be included as an attachment in the ERT or an alternate electronic file consistent with the XML schema listed on the EPA's ERT website. Submit the ERT generated package or alternative file to the EPA via CEDRI.

(3) *CBI.* If you claim some of the information submitted under paragraph (g)(1) or (2) of this section is CBI, then you must submit a complete file, including information claimed to be CBI, to the EPA. The file must be generated through the use of the EPA's ERT or an alternate electronic file consistent with the XML schema listed on the EPA's ERT website. Submit the file on a compact disc, flash drive, or other commonly used electronic storage medium and clearly mark the medium as CBI. Mail the electronic medium to U.S. EPA/OAQPS/CORE CBI Office, Attention: Group Leader, Measurement Policy Group, MD C404–02, 4930 Old Page Rd., Durham, NC 27703. The same file with the CBI omitted must be submitted to the EPA via EPA's CDX as described in paragraphs (g)(1) and (2) of this section.

sfrattini on LAPJZKW1R2 with $$_JOB
VerDate Sep<11>2014 09:16 Apr 04, 2023 Jkt 256165 PO 00000 Frm 00401 Fmt 8010 Sfmt 8010 Q:\40\256165.XXX PC31

(h) Beginning no later than the compliance dates specified in § 63.2342(e), you must start submitting performance evaluation reports in accordance with this paragraph. Unless otherwise specified in this subpart, within 60 days after the date of completing each CEMS performance evaluation (as defined in § 63.2), you must submit the results of the performance evaluation following the procedures specified in paragraphs (h)(1) through (3) of this section.

(1) *Performance evaluations of CEMS measuring relative accuracy test audit (RATA) pollutants that are supported by the EPA's ERT as listed on the EPA's ERT website at the time of the evaluation.* Submit the results of the performance evaluation to the EPA via CEDRI, which can be accessed through the EPA's CDX. The data must be submitted in a file format generated through the use of the EPA's ERT. Alternatively, you may submit an electronic file consistent with the XML schema listed on the EPA's ERT website.

(2) *Performance evaluations of CEMS measuring RATA pollutants that are not supported by the EPA's ERT as listed on the EPA's ERT website at the time of the evaluation.* The results of the performance evaluation must be included as an attachment in the ERT or an alternate electronic file consistent with the XML schema listed on the EPA's ERT website. Submit the ERT generated package or alternative file to the EPA via CEDRI.

(3) *CBI.* If you claim some of the information submitted under paragraph (h)(1) or (2) of this section is CBI, then you must submit a complete file, including information claimed to be CBI, to the EPA. The file must be generated through the use of the EPA's ERT or an alternate electronic file consistent with the XML schema listed on the EPA's ERT website. Submit the file on a compact disc, flash drive, or other commonly used electronic storage medium and clearly mark the medium as CBI. Mail the electronic medium to U.S. EPA/OAQPS/CORE CBI Office, Attention: Group Leader, Measurement Policy Group, MD C404–02, 4930 Old Page Rd., Durham, NC 27703. The same file with the CBI omitted must be submitted to the EPA via the EPA's CDX as described in paragraphs (h)(1) and (2) of this section.

(i) If you are required to electronically submit a report through CEDRI in the EPA's CDX, you may assert a claim of EPA system outage for failure to timely comply with the reporting requirement. To assert a claim of EPA system outage, you must meet the requirements outlined in paragraphs (i)(1) through (7) of this section.

(1) You must have been or will be precluded from accessing CEDRI and submitting a required report within the time prescribed due to an outage of either the EPA's CEDRI or CDX systems.

(2) The outage must have occurred within the period of time beginning five business days prior to the date that the submission is due.

(3) The outage may be planned or unplanned.

(4) You must submit notification to the Administrator in writing as soon as possible following the date you first knew, or through due diligence should have known, that the event may cause or has caused a delay in reporting.

(5) You must provide to the Administrator a written description identifying:

(i) The date(s) and time(s) when CDX or CEDRI was accessed and the system was unavailable;

(ii) A rationale for attributing the delay in reporting beyond the regulatory deadline to EPA system outage;

(iii) Measures taken or to be taken to minimize the delay in reporting; and

(iv) The date by which you propose to report, or if you have already met the reporting requirement at the time of the notification, the date you reported.

(6) The decision to accept the claim of EPA system outage and allow an extension to the reporting deadline is solely within the discretion of the Administrator.

(7) In any circumstance, the report must be submitted electronically as soon as possible after the outage is resolved.

(j) If you are required to electronically submit a report through CEDRI in the EPA's CDX, you may assert a claim of force majeure for failure to timely comply with the reporting requirement. To assert a claim of force

sfrattini on LAPJZKW1R2 with $$_JOB
VerDate Sep<11>2014 09:16 Apr 04, 2023 Jkt 256165 PO 00000 Frm 00402 Fmt 8010 Sfmt 8010 Q:\40\256165.XXX PC31

majeure, you must meet the requirements outlined in paragraphs (j)(1) through (5) of this section.

(1) You may submit a claim if a force majeure event is about to occur, occurs, or has occurred or there are lingering effects from such an event within the period of time beginning five business days prior to the date the submission is due. For the purposes of this paragraph, a force majeure event is defined as an event that will be or has been caused by circumstances beyond the control of the affected facility, its contractors, or any entity controlled by the affected facility that prevents you from complying with the requirement to submit a report electronically within the time period prescribed. Examples of such events are acts of nature (*e.g.*, hurricanes, earthquakes, or floods), acts of war or terrorism, or equipment failure or safety hazard beyond the control of the affected facility (*e.g.*, large scale power outage).

(2) You must submit notification to the Administrator in writing as soon as possible following the date you first knew, or through due diligence should have known, that the event may cause or has caused a delay in reporting.

(3) You must provide to the Administrator:

(i) A written description of the force majeure event;

(ii) A rationale for attributing the delay in reporting beyond the regulatory deadline to the force majeure event;

(iii) Measures taken or to be taken to minimize the delay in reporting; and

(iv) The date by which you propose to report, or if you have already met the reporting requirement at the time of the notification, the date you reported.

(4) The decision to accept the claim of force majeure and allow an extension to the reporting deadline is solely within the discretion of the Administrator.

(5) In any circumstance, the reporting must occur as soon as possible after the force majeure event occurs.

[69 FR 5063, Feb. 3, 2004, as amended at 71 FR 42910, July 28, 2006; 85 FR 40768, July 7, 2020]

§63.2390 What records must I keep?

(a) For each emission source identified in §63.2338 that does not require control under this subpart, you must keep all records identified in §63.2343.

(b) For each emission source identified in §63.2338 that does require control under this subpart:

(1) Except as specified in paragraph (h) of this section for flares, you must keep all records identified in subpart SS of this part and in Table 12 to this subpart that are applicable, including records related to notifications and reports, SSM, performance tests, CMS, and performance evaluation plans. You must also comply with the requirements specified in §63.2346(l).

(2) Except as specified in paragraph (h) of this section for flares, you must keep the records required to show continuous compliance, as required in subpart SS of this part and in Tables 8 through 10 to this subpart, with each emission limitation, operating limit, and work practice standard that applies to you. You must also comply with the requirements specified in §63.2346(l).

(3) In addition to the information required in §63.998(c), the manufacturer's specifications or your written procedures must include a schedule for calibrations, preventative maintenance procedures, a schedule for preventative maintenance, and corrective actions to be taken if a calibration fails.

(c) For each transport vehicle into which organic liquids are loaded at a transfer rack that is subject to control based on the criteria specified in Table 2 to this subpart, items 7 through 10, you must keep the applicable records in paragraphs (c)(1) and (2) of this section or alternatively the verification records in paragraph (c)(3) of this section.

(1) For transport vehicles equipped with vapor collection equipment, the documentation described in 40 CFR 60.505(b), except that the test title is: Transport Vehicle Pressure Test-EPA Reference Method 27.

(2) For transport vehicles without vapor collection equipment, current certification in accordance with the U.S. DOT qualification and maintenance requirements in 49 CFR part 180, subpart E for cargo tanks and subpart F for tank cars.

(3) In lieu of keeping the records specified in paragraph (c)(1) or (2) of

sfrattini on LAPJZKW1R2 with $$_JOB
VerDate Sep<11>2014 09:16 Apr 04, 2023 Jkt 256165 PO 00000 Frm 00403 Fmt 8010 Sfmt 8010 Q:\40\256165.XXX PC31

this section, as applicable, the owner or operator shall record that the verification of U.S. DOT tank certification or Method 27 of 40 CFR part 60, appendix A–8 testing, required in Table 5 to this subpart, item 2, has been performed. Various methods for the record of verification can be used, such as: A check-off on a log sheet, a list of U.S. DOT serial numbers or Method 27 data, or a position description for gate security showing that the security guard will not allow any trucks on site that do not have the appropriate documentation.

(d) You must keep records of the total actual annual facility-level organic liquid loading volume as defined in § 63.2406 through transfer racks to document the applicability, or lack thereof, of the emission limitations in Table 2 to this subpart, items 7 through 10.

(e) An owner or operator who elects to comply with § 63.2346(a)(4) shall keep the records specified in paragraphs (e)(1) through (3) of this section.

(1) A record of the U.S. DOT certification required by § 63.2346(a)(4)(ii).

(2) A record of the pressure relief vent setting specified in § 63.2346(a)(4)(v).

(3) If complying with § 63.2346(a)(4)(vi)(B), keep the records specified in paragraphs (e)(3)(i) and (ii) of this section.

(i) A record of the equipment to be used and the procedures to be followed when reloading the cargo tank or tank car and displacing vapors to the storage tank from which the liquid originates.

(ii) A record of each time the vapor balancing system is used to comply with § 63.2346(a)(4)(vi)(B).

(f) Beginning no later than the compliance dates specified in § 63.2342(e), for each deviation from an emission limitation, operating limit, and work practice standard specified in paragraph (a) of this section, you must keep a record of the information specified in paragraph (f)(1) through (3) of this section.

(1) In the event that an affected unit fails to meet an applicable standard, record the number of failures. For each failure record the date, time and duration of each failure.

(2) For each failure to meet an applicable standard, record and retain a list of the affected sources or equipment, an estimate of the quantity of each regulated pollutant emitted over any emission limit and a description of the method used to estimate the emissions.

(3) Record actions taken to minimize emissions in accordance with § 63.2350(d) and any corrective actions taken to return the affected unit to its normal or usual manner of operation.

(g) Beginning no later than the compliance dates specified in § 63.2342(e), for each flow event from a bypass line subject to the requirements in § 63.2378(e)(1) and (2), you must maintain records sufficient to determine whether or not the detected flow included flow requiring control. For each flow event from a bypass line requiring control that is released either directly to the atmosphere or to a control device not meeting the requirements specified in § 63.2378(a), you must include an estimate of the volume of gas, the concentration of organic HAP in the gas and the resulting emissions of organic HAP that bypassed the control device using process knowledge and engineering estimates.

(h) Beginning no later than the compliance dates specified in § 63.2342(e), for each flare subject to the requirements in § 63.2380, you must keep records specified in paragraphs (h)(1) through (10) of this section in lieu of the information required in § 63.998(a)(1).

(1) Retain records of the output of the monitoring device used to detect the presence of a pilot flame or flare flame as required in § 63.670(b) for a minimum of 2 years. Retain records of each 15-minute block during which there was at least one minute that no pilot flame or flare flame is present when regulated material is routed to a flare for a minimum of 5 years. You may reduce the collected minute-by-minute data to a 15-minute block basis with an indication of whether there was at least one minute where no pilot flame or flare flame was present.

(2) Retain records of daily visible emissions observations or video surveillance images required in § 63.670(h) as specified in paragraphs (h)(2)(i)

sfrattini on LAPJZKW1R2 with $$_JOB
VerDate Sep<11>2014 09:16 Apr 04, 2023 Jkt 256165 PO 00000 Frm 00404 Fmt 8010 Sfmt 8010 Q:\40\256165.XXX PC31

through (iv) of this section, as applicable, for a minimum of 3 years.

(i) To determine when visible emissions observations are required, the record must identify all periods when regulated material is vented to the flare.

(ii) If visible emissions observations are performed using Method 22 of 40 CFR part 60, appendix A–7, then the record must identify whether the visible emissions observation was performed, the results of each observation, total duration of observed visible emissions, and whether it was a 5-minute or 2-hour observation. Record the date and start and end time of each visible emissions observation.

(iii) If a video surveillance camera is used, then the record must include all video surveillance images recorded, with time and date stamps.

(iv) For each 2-hour period for which visible emissions are observed for more than 5 minutes in 2 consecutive hours, then the record must include the date and start and end time of the 2-hour period and an estimate of the cumulative number of minutes in the 2-hour period for which emissions were visible.

(3) The 15-minute block average cumulative flows for flare vent gas and, if applicable, total steam, perimeter assist air, and premix assist air specified to be monitored under §63.670(i), along with the date and time interval for the 15-minute block. If multiple monitoring locations are used to determine cumulative vent gas flow, total steam, perimeter assist air, and premix assist air, then retain records of the 15-minute block average flows for each monitoring location for a minimum of 2 years, and retain the 15-minute block average cumulative flows that are used in subsequent calculations for a minimum of 5 years. If pressure and temperature monitoring is used, then retain records of the 15-minute block average temperature, pressure, and molecular weight of the flare vent gas or assist gas stream for each measurement location used to determine the 15-minute block average cumulative flows for a minimum of 2 years, and retain the 15-minute block average cumulative flows that are used in subsequent calculations for a minimum of 5 years.

(4) The flare vent gas compositions specified to be monitored under §63.670(j). Retain records of individual component concentrations from each compositional analysis for a minimum of 2 years. If an NHVvg analyzer is used, retain records of the 15-minute block average values for a minimum of 5 years.

(5) Each 15-minute block average operating parameter calculated following the methods specified in §63.670(k) through (n), as applicable.

(6) All periods during which operating values are outside of the applicable operating limits specified in §63.670(d) through (f) when regulated material is being routed to the flare.

(7) All periods during which you do not perform flare monitoring according to the procedures in §63.670(g).

(8) Records of periods when there is flow of vent gas to the flare, but when there is no flow of regulated material to the flare, including the start and stop time and dates of periods of no regulated material flow.

(9) The monitoring plan required in §63.671(b).

(10) Records described in §63.10(b)(2)(vi).

[69 FR 5063, Feb. 3, 2004, as amended at 71 FR 42910, July 28, 2006; 73 FR 40982, July 17, 2008; 85 FR 40771, July 7, 2020]

§63.2394 In what form and how long must I keep my records?

(a) Your records must be in a form suitable and readily available for expeditious inspection and review according to §63.10(b)(1), including records stored in electronic form at a separate location.

(b) As specified in §63.10(b)(1), you must keep your files of all information (including all reports and notifications) for at least 5 years following the date of each occurrence, measurement, maintenance, corrective action, report, or record.

(c) You must keep each record on site for at least 2 years after the date of each occurrence, measurement, maintenance, corrective action, report, or record, according to §63.10(b)(1). You

sfrattini on LAPJZKW1R2 with $$_JOB
VerDate Sep<11>2014 09:16 Apr 04, 2023 Jkt 256165 PO 00000 Frm 00405 Fmt 8010 Sfmt 8010 Q:\40\256165.XXX PC31

may keep the records off site for the remaining 3 years.

[69 FR 5063, Feb. 3, 2004, as amended at 71 FR 42911, July 28, 2006]

OTHER REQUIREMENTS AND INFORMATION

§ 63.2396 What compliance options do I have if part of my plant is subject to both this subpart and another subpart?

(a) *Compliance with other regulations for storage tanks.* (1) After the compliance dates specified in § 63.2342, you are in compliance with the provisions of this subpart for any storage tank that is assigned to the OLD affected source and that is both controlled with a floating roof and is in compliance with the provisions of either 40 CFR part 60, subpart Kb, or 40 CFR part 61, subpart Y, except that records shall be kept for 5 years rather than 2 years for storage tanks that are assigned to the OLD affected source.

(2) After the compliance dates specified in § 63.2342, you are in compliance with the provisions of this subpart for any storage tank with a fixed roof that is assigned to the OLD affected source and that is both controlled with a closed vent system and control device and is in compliance with either 40 CFR part 60, subpart Kb, or 40 CFR part 61, subpart Y, except that you must comply with the monitoring, recordkeeping, and reporting requirements in this subpart.

(3) Except as specified in paragraph (a)(4) of this section, as an alternative to paragraphs (a)(1) and (2) of this section, if a storage tank assigned to the OLD affected source is subject to control under 40 CFR part 60, subpart Kb, or 40 CFR part 61, subpart Y, you may elect to comply only with the requirements of this subpart for storage tanks meeting the applicability criteria for control in Table 2 to this subpart.

(4) Beginning no later than the compliance dates specified in § 63.2342(e), the applicability criteria for control specified in Table 2 to this subpart for storage tanks at an existing affected source no longer apply as specified in § 63.2346(a)(5). Instead, beginning no later than the compliance dates specified in § 63.2342(e), as an alternative to paragraphs (a)(1) and (2) of this section, if a storage tank assigned to an existing OLD affected source is subject to control under 40 CFR part 60, subpart Kb, or 40 CFR part 61, subpart Y, you may elect to comply only with the requirements of this subpart for storage tanks at an existing affected source meeting the applicability criteria for control in Table 2b to this subpart.

(b) *Compliance with other regulations for transfer racks.* After the compliance dates specified in § 63.2342, if you have a transfer rack that is subject to 40 CFR part 61, subpart BB, and that transfer rack is in OLD operation, you must meet all of the requirements of this subpart for that transfer rack when the transfer rack is in OLD operation during the loading of organic liquids.

(c) *Compliance with other regulations for equipment leak components.* (1) After the compliance dates specified in § 63.2342, if you have pumps, valves, or sampling connections that are subject to a 40 CFR part 60 subpart, and those pumps, valves, and sampling connections are in OLD operation and in organic liquids service, as defined in this subpart, you must comply with the provisions of each subpart for those equipment leak components.

(2) After the compliance dates specified in § 63.2342, if you have pumps, valves, or sampling connections subject to subpart GGG of this part, and those pumps, valves, and sampling connections are in OLD operation and in organic liquids service, as defined in this subpart, you may elect to comply with the provisions of this subpart for all such equipment leak components. You must identify in the Notification of Compliance Status required by § 63.2382(b) the provisions with which you will comply.

(d) *Overlap of subpart EEEE with other regulations for flares for the OLD source category.* (1) Beginning no later than the compliance dates specified in § 63.2342(e), flares that are subject to § 60.18 of this chapter or § 63.11 and used as a control device for an emission point subject to the requirements in Tables 2 or 2b to of this subpart are required to comply only with § 63.2380. At any time before the compliance dates specified in § 63.2342(e), flares that are subject to § 60.18 or § 63.11 and elect to

sfrattini on LAPJZKW1R2 with $$_JOB
VerDate Sep<11>2014 09:16 Apr 04, 2023 Jkt 256165 PO 00000 Frm 00406 Fmt 8010 Sfmt 8010 Q:\40\256165.XXX PC31

comply with § 63.2380 are required to comply only with § 63.2380.

(2) Beginning no later than the compliance dates specified in § 63.2342(e), flares that are subject to § 63.987 and used as a control device for an emission point subject to the requirements in Tables 2 or 2b to this subpart are required to comply only with § 63.2380. At any time before the compliance dates specified in § 63.2342(e), flares that are subject to §§ 63.987 and elect to comply with § 63.2380 are required to comply only with § 63.2380.

(3) Beginning no later than the compliance dates specified in § 63.2342(e), flares that are subject to the requirements of subpart CC of this part and used as a control device for an emission point subject to the requirements in Tables 2 or 2b to this subpart are required to comply only with the flare requirements in subpart CC of this part.

(e) *Overlap with other regulations for monitoring, recordkeeping, and reporting*—(1) *Control devices.* After the compliance dates specified in § 63.2342, if any control device subject to this subpart is also subject to monitoring, recordkeeping, and reporting requirements of another 40 CFR part 63 subpart, the owner or operator must be in compliance with the monitoring, recordkeeping, and reporting requirements of this subpart EEEE. If complying with the monitoring, recordkeeping, and reporting requirements of the other subpart satisfies the monitoring, recordkeeping, and reporting requirements of this subpart, the owner or operator may elect to continue to comply with the monitoring, recordkeeping, and reporting requirements of the other subpart. In such instances, the owner or operator will be deemed to be in compliance with the monitoring, recordkeeping, and reporting requirements of this subpart. The owner or operator must identify the other subpart being complied with in the Notification of Compliance Status required by § 63.2382(b).

(2) Equipment leak components. After the compliance dates specified in § 63.2342, if you are applying the applicable recordkeeping and reporting requirements of another subpart of this part to the valves, pumps, and sampling connection systems associated with a transfer rack subject to this subpart that only unloads organic liquids directly to or via pipeline to a non-tank process unit component or to a storage tank subject to the other subpart of this part, the owner or operator must be in compliance with the recordkeeping and reporting requirements of this subpart EEEE. If complying with the recordkeeping and reporting requirements of the other subpart satisfies the recordkeeping and reporting requirements of this subpart, the owner or operator may elect to continue to comply with the recordkeeping and reporting requirements of the other subpart. In such instances, the owner or operator will be deemed to be in compliance with the recordkeeping and reporting requirements of this subpart. The owner or operator must identify the other subpart being complied with in the Notification of Compliance Status required by § 63.2382(d).

[69 FR 5063, Feb. 3, 2004, as amended at 71 FR 42911, July 28, 2006; 85 FR 40772, July 7, 2020]

§ 63.2398 What parts of the General Provisions apply to me?

Table 12 to this subpart shows which parts of the General Provisions in §§ 63.1 through 63.15 apply to you.

§ 63.2402 Who implements and enforces this subpart?

(a) This subpart can be implemented and enforced by the U.S. Environmental Protection Agency (U.S. EPA) or a delegated authority such as your State, local, or eligible tribal agency. If the EPA Administrator has delegated authority to your State, local, or eligible tribal agency, then that agency, as well as the EPA, has the authority to implement and enforce this subpart. You should contact your EPA Regional Office (see list in § 63.13) to find out if this subpart is delegated to your State, local, or eligible tribal agency.

(b) In delegating implementation and enforcement authority for this subpart to a State, local, or eligible tribal agency under subpart E of this part, the authorities contained in paragraphs (b)(1) through (5) of this section are retained by the EPA Administrator

sfrattini on LAPJZKW1R2 with $$_JOB
VerDate Sep<11>2014 09:16 Apr 04, 2023 Jkt 256165 PO 00000 Frm 00407 Fmt 8010 Sfmt 8010 Q:\40\256165.XXX PC31

and are not delegated to the State, local, or eligible tribal agency.

(1) Approval of alternatives to the nonopacity emission limitations, operating limits, and work practice standards in § 63.2346(a) through (c) under § 63.6(g).

(2) Approval of major changes to test methods under § 63.7(e)(2)(ii) and (f) and as defined in § 63.90.

(3) Approval of major changes to monitoring under § 63.8(f) and as defined in § 63.90.

(4) Approval of major changes to recordkeeping and reporting under § 63.10(f) and as defined in § 63.90.

(5) Approval of an alternative to any electronic reporting to the EPA required by this subpart.

[69 FR 5063, Feb. 3, 2004, as amended at 71 FR 42911, July 28, 2006; 85 FR 40773, July 7, 2020]

§ 63.2406 What definitions apply to this subpart?

Terms used in this subpart are defined in the CAA, in § 63.2, 40 CFR part 63, subparts H, PP, SS, TT, UU, and WW, and in this section. If the same term is defined in another subpart and in this section, it will have the meaning given in this section for purposes of this subpart. Notwithstanding the introductory language in § 63.921, the terms ''container'' and ''safety device'' shall have the meaning found in this subpart and not in § 63.921.

Actual annual average temperature, for organic liquids, means the temperature determined using the following methods:

(1) For heated or cooled storage tanks, use the calculated annual average temperature of the stored organic liquid as determined from a design analysis of the storage tank.

(2) For ambient temperature storage tanks:

(i) Use the annual average of the local (nearest) normal daily mean temperatures reported by the National Climatic Data Center; or

(ii) Use any other method that the EPA approves.

Annual average true vapor pressure means the equilibrium partial pressure exerted by the total organic HAP in Table 1 to this subpart in the stored or transferred organic liquid. For the purpose of determining if a liquid meets the definition of an organic liquid, the vapor pressure is determined using conditions of 77 degrees Fahrenheit and 29.92 inches of mercury. For the purpose of determining whether an organic liquid meets the applicability criteria in Table 2 to this subpart, items 1 through 6, or Table 2b to this subpart, items 1 through 3, use the actual annual average temperature as defined in this subpart. The vapor pressure value in either of these cases is determined:

(1) Using standard reference texts; or

(2) [Reserved]

(3) Using any other method that the EPA approves.

Bottoms receiver means a tank that collects distillation bottoms before the stream is sent for storage or for further processing downstream.

Cargo tank means a liquid-carrying tank permanently attached and forming an integral part of a motor vehicle or truck trailer. This term also refers to the entire cargo tank motor vehicle or trailer. For the purpose of this subpart, vacuum trucks used exclusively for maintenance or spill response are not considered cargo tanks.

Closed vent system means a system that is not open to the atmosphere and is composed of piping, ductwork, connections, and, if necessary, flow-inducing devices that transport gas or vapors from an emission point to a control device. This system does not include the vapor collection system that is part of some transport vehicles or the loading arm or hose that is used for vapor return. For transfer racks, the closed vent system begins at, and includes, the first block valve on the downstream side of the loading arm or hose used to convey displaced vapors.

Combustion device means an individual unit of equipment, such as a flare, oxidizer, catalytic oxidizer, process heater, or boiler, used for the combustion of organic emissions.

Condensate means hydrocarbon liquid separated from natural gas that condenses due to changes in the temperature or pressure, or both, and remains liquid at standard conditions as specified in § 63.2. Only those condensates downstream of the first point of custody transfer after the production field are considered condensates in this subpart.

sfrattini on LAPJZKW1R2 with $$_JOB
VerDate Sep<11>2014 09:16 Apr 04, 2023 Jkt 256165 PO 00000 Frm 00408 Fmt 8010 Sfmt 8010 Q:\40\256165.XXX PC31

Container means a portable unit in which a material can be stored, transported, treated, disposed of, or otherwise handled. Examples of containers include, but are not limited to, drums and portable cargo containers known as ''portable tanks'' or ''totes.''

Control device means any combustion device, recovery device, recapture device, or any combination of these devices used to comply with this subpart. Such equipment or devices include, but are not limited to, absorbers, adsorbers, condensers, and combustion devices. Primary condensers, steam strippers, and fuel gas systems are not considered control devices.

Crude oil means any of the naturally occurring liquids commonly referred to as crude oil, regardless of specific physical properties. Only those crude oils downstream of the first point of custody transfer after the production field are considered crude oils in this subpart.

Custody transfer means the transfer of hydrocarbon liquids after processing and/or treatment in the producing operations, or from storage tanks or automatic transfer facilities to pipelines or any other forms of transportation.

Design evaluation means a procedure for evaluating control devices that complies with the requirements in § 63.985(b)(1)(i).

Deviation means any instance in which an affected source subject to this subpart, or portion thereof, or an owner or operator of such a source:

(1) Fails to meet any requirement or obligation established by this subpart including, but not limited to, any emission limitation (including any operating limit) or work practice standard;

(2) Fails to meet any term or condition that is adopted to implement an applicable requirement in this subpart, and that is included in the operating permit for any affected source required to obtain such a permit; or

(3) Before July 7, 2023, fails to meet any emission limitation (including any operating limit) or work practice standard in this subpart during SSM. On and after July 7, 2023, this paragraph no longer applies.

Emission limitation means an emission limit, opacity limit, operating limit, or visible emission limit.

Equipment leak component means each pump, valve, and sampling connection system used in organic liquids service at an OLD operation. Valve types include control, globe, gate, plug, and ball. Relief and check valves are excluded.

Force majeure event means a release of HAP, either directly to the atmosphere from a safety device or discharged via a flare, that is demonstrated to the satisfaction of the Administrator to result from an event beyond the owner or operator's control, such as natural disasters; acts of war or terrorism; loss of a utility external to the OLD operation (*e.g.*, external power curtailment), excluding power curtailment due to an interruptible service agreement; and fire or explosion originating at a near or adjoining facility outside of the OLD operation that impacts the OLD operation's ability to operate.

Gasoline means any petroleum distillate or petroleum distillate/alcohol blend having a Reid vapor pressure of 27.6 kilopascals (4.0 pounds per square inch absolute (psia)) or greater which is used as a fuel for internal combustion engines. Aviation gasoline is included in this definition.

High throughput transfer rack means those transfer racks that transfer into transport vehicles (for existing affected sources) or into transport vehicles and containers (for new affected sources) a total of 11.8 million liters per year or greater of organic liquids.

In organic liquids service means that an equipment leak component contains or contacts organic liquids having 5 percent by weight or greater of the organic HAP listed in Table 1 to this subpart.

Low throughput transfer rack means those transfer racks that transfer into transport vehicles (for existing affected sources) or into transport vehicles and containers (for new affected sources) less than 11.8 million liters per year of organic liquids.

On-site or *on site* means, with respect to records required to be maintained by this subpart or required by another subpart referenced by this subpart, that records are stored at a location

sfrattini on LAPJZKW1R2 with $$_JOB
VerDate Sep<11>2014 09:16 Apr 04, 2023 Jkt 256165 PO 00000 Frm 00409 Fmt 8010 Sfmt 8010 Q:\40\256165.XXX PC31

within a major source which encompasses the affected source. On-site includes, but is not limited to, storage at the affected source to which the records pertain, storage in central files elsewhere at the major source, or electronically available at the site.

Organic liquid means:

(1) Any non-crude oil liquid, non-condensate liquid, or liquid mixture that contains 5 percent by weight or greater of the organic HAP listed in Table 1 to this subpart, as determined using the procedures specified in § 63.2354(c).

(2) Any crude oils or condensates downstream of the first point of custody transfer.

(3) Organic liquids for purposes of this subpart do not include the following liquids:

(i) Gasoline (including aviation gasoline), kerosene (No. 1 distillate oil), diesel (No. 2 distillate oil), asphalt, and heavier distillate oils and fuel oils;

(ii) Any fuel consumed or dispensed on the plant site directly to users (such as fuels for fleet refueling or for refueling marine vessels that support the operation of the plant);

(iii) Hazardous waste;

(iv) Wastewater;

(v) Ballast water; or

(vi) Any non-crude oil or non-condensate liquid with an annual average true vapor pressure less than 0.7 kilopascals (0.1 psia).

Organic liquids distribution (OLD) operation means the combination of activities and equipment used to store or transfer organic liquids into, out of, or within a plant site regardless of the specific activity being performed. Activities include, but are not limited to, storage, transfer, blending, compounding, and packaging.

Permitting authority means one of the following:

(1) The State Air Pollution Control Agency, local agency, or other agency authorized by the EPA Administrator to carry out a permit program under 40 CFR part 70; or

(2) The EPA Administrator, in the case of EPA-implemented permit programs under title V of the CAA (42 U.S.C. 7661) and 40 CFR part 71.

Plant site means all contiguous or adjoining surface property that is under common control, including surface properties that are separated only by a road or other public right-of-way. Common control includes surface properties that are owned, leased, or operated by the same entity, parent entity, subsidiary, or any combination.

Pressure relief device means a valve, rupture disk, or similar device used only to release an unplanned, nonroutine discharge of gas from process equipment in order to avoid safety hazards or equipment damage. A pressure relief device discharge can result from an operator error, a malfunction such as a power failure or equipment failure, or other unexpected cause. Such devices include conventional, spring-actuated relief valves, balanced bellows relief valves, pilot-operated relief valves, rupture disks, and breaking, buckling, or shearing pin devices.

Relief valve means a type of pressure relief device that is designed to reclose after the pressure relief.

Research and development facility means laboratory and pilot plant operations whose primary purpose is to conduct research and development into new processes and products, where the operations are under the close supervision of technically trained personnel, and which are not engaged in the manufacture of products for commercial sale, except in a *de minimis* manner.

Responsible official means responsible official as defined in 40 CFR 70.2 and 40 CFR 71.2, as applicable.

Safety device means a closure device such as a pressure relief valve, frangible disc, fusible plug, or any other type of device that functions exclusively to prevent physical damage or permanent deformation to a unit or its air emission control equipment by venting gases or vapors directly to the atmosphere during unsafe conditions resulting from an unplanned, accidental, or emergency event.

Shutdown means the cessation of operation of an OLD affected source, or portion thereof (other than as part of normal operation of a batch-type operation), including equipment required or used to comply with this subpart, or the emptying and degassing of a storage tank. Shutdown as defined here includes, but is not limited to, events that result from periodic maintenance, replacement of equipment, or repair.

sfrattini on LAPJZKW1R2 with $$_JOB
VerDate Sep<11>2014 09:16 Apr 04, 2023 Jkt 256165 PO 00000 Frm 00410 Fmt 8010 Sfmt 8010 Q:\40\256165.XXX PC31

Startup means the setting in operation of an OLD affected source, or portion thereof (other than as part of normal operation of a batch-type operation), for any purpose. Startup also includes the placing in operation of any individual piece of equipment required or used to comply with this subpart including, but not limited to, control devices and monitors.

Storage tank means a stationary unit that is constructed primarily of nonearthen materials (such as wood, concrete, steel, or reinforced plastic) that provide structural support and is designed to hold a bulk quantity of liquid. Storage tanks do not include:

(1) Units permanently attached to conveyances such as trucks, trailers, rail cars, barges, or ships;

(2) Pressure vessels designed to operate in excess of 204.9 kilopascals and without emissions to the atmosphere;

(3) Bottoms receivers;

(4) Surge control vessels;

(5) Vessels storing wastewater; or

(6) Reactor vessels associated with a manufacturing process unit.

Surge control vessel means feed drums, recycle drums, and intermediate vessels. Surge control vessels are used within chemical manufacturing processes when in-process storage, mixing, or management of flow rates or volumes is needed to assist in production of a product.

Tank car means a car designed to carry liquid freight by rail, and including a permanently attached tank.

Total actual annual facility-level organic liquid loading volume means the total facility-level actual volume of organic liquid loaded for transport within or out of the facility through transfer racks that are part of the affected source into transport vehicles (for existing affected sources) or into transport vehicles and containers (for new affected sources) based on a 3-year rolling average, calculated annually.

(1) For existing affected sources, each 3-year rolling average is based on actual facility-level loading volume during each calendar year (January 1 through December 31) in the 3-year period. For calendar year 2004 only (the first year of the initial 3-year rolling average), if an owner or operator of an affected source does not have actual loading volume data for the time period from January 1, 2004, through February 2, 2004 (the time period prior to the effective date of the OLD NESHAP), the owner or operator shall compute a facility-level loading volume for this time period as follows: At the end of the 2004 calendar year, the owner or operator shall calculate a daily average facility-level loading volume (based on the actual loading volume for February 3, 2004, through December 31, 2004) and use that daily average to estimate the facility-level loading volume for the period of time from January 1, 2004, through February 2, 2004. The owner or operator shall then sum the estimated facility-level loading volume from January 1, 2004, through February 2, 2004, and the actual facility-level loading volume from February 3, 2004, through December 31, 2004, to calculate the annual facility-level loading volume for calendar year 2004.

(2)(i) For new affected sources, the 3-year rolling average is calculated as an average of three 12-month periods. An owner or operator must select as the beginning calculation date with which to start the calculations as either the initial startup date of the new affected source or the first day of the calendar month following the month in which startup occurs. Once selected, the date with which the calculations begin cannot be changed.

(ii) The initial 3-year rolling average is based on the projected maximum facility-level annual loading volume for each of the 3 years following the selected beginning calculation date. The second 3-year rolling average is based on actual facility-level loading volume for the first year of operation plus a new projected maximum facility-level annual loading volume for second and third years following the selected beginning calculation date. The third 3-year rolling average is based on actual facility-level loading volume for the first 2 years of operation plus a new projected maximum annual facility-level loading volume for the third year following the beginning calculation date. Subsequent 3-year rolling averages are based on actual facility-level loading volume for each year in the 3-year rolling average.

sfrattini on LAPJZKW1R2 with $$_JOB
VerDate Sep<11>2014 09:16 Apr 04, 2023 Jkt 256165 PO 00000 Frm 00411 Fmt 8010 Sfmt 8010 Q:\40\256165.XXX PC31

Transfer rack means a single system used to load organic liquids into, or unload organic liquids out of, transport vehicles or containers. It includes all loading and unloading arms, pumps, meters, shutoff valves, relief valves, and other piping and equipment necessary for the transfer operation. Transfer equipment and operations that are physically separate (i.e., do not share common piping, valves, and other equipment) are considered to be separate transfer racks.

Transport vehicle means a cargo tank or tank car.

Vapor balancing system means:

(1) A piping system that collects organic HAP vapors displaced from transport vehicles or containers during loading and routes the collected vapors to the storage tank from which the liquid being loaded originated or to another storage tank connected to a common header. For containers, the piping system must route the displaced vapors directly to the appropriate storage tank or to another storage tank connected to a common header in order to qualify as a vapor balancing system; or

(2) A piping system that collects organic HAP vapors displaced from the loading of a storage tank and routes the collected vapors to the transport vehicle from which the storage tank is filled.

Vapor collection system means any equipment located at the source (i.e., at the OLD operation) that is not open to the atmosphere; that is composed of piping, connections, and, if necessary, flow-inducing devices; and that is used for:

(1) Containing and conveying vapors displaced during the loading of transport vehicles to a control device;

(2) Containing and directly conveying vapors displaced during the loading of containers; or

(3) Vapor balancing. This does not include any of the vapor collection equipment that is installed on the transport vehicle.

Vapor-tight transport vehicle means a transport vehicle that has been demonstrated to be vapor-tight. To be considered vapor-tight, a transport vehicle equipped with vapor collection equipment must undergo a pressure change of no more than 250 pascals (1 inch of water) within 5 minutes after it is pressurized to 4,500 pascals (18 inches of water). This capability must be demonstrated annually using the procedures specified in Method 27 of 40 CFR part 60, appendix A–8. For all other transport vehicles, vapor tightness is demonstrated by performing the U.S. DOT pressure test procedures for tank cars and cargo tanks.

Work practice standard means any design, equipment, work practice, or operational standard, or combination thereof, that is promulgated pursuant to section 112(h) of the CAA.

[69 FR 5063, Feb. 3, 2004, as amended at 71 FR 42911, July 28, 2006; 85 FR 40773, July 7, 2020; 85 FR 44217, July 22, 2020]

TABLE 1 TO SUBPART EEEE OF PART 63—ORGANIC HAZARDOUS AIR POLLUTANTS

You must use the organic HAP information listed in the following table to determine which of the liquids handled at your facility meet the HAP content criteria in the definition of Organic Liquid in § 63.2406.

Compound name	CAS No.[1]
2,4-D salts and esters	94–75–7
Acetaldehyde	75–07–0
Acetonitrile	75–05–8
Acetophenone	98–86–2
Acrolein	107–02–8
Acrylamide	79–06–1
Acrylic acid	79–10–7
Acrylonitrile	107–13–1
Allyl chloride	107–05–1
Aniline	62–53–3
Benzene	71–43–2
Biphenyl	92–52–4
Butadiene (1,3-)	106–99–0
Carbon tetrachloride	56–23–5
Chloroacetic acid	79–11–8

sfrattini on LAPJZKW1R2 with $$_JOB
VerDate Sep<11>2014 09:16 Apr 04, 2023 Jkt 256165 PO 00000 Frm 00412 Fmt 8010 Sfmt 8002 Q:\40\256165.XXX PC31

Compound name	CAS No.[1]
Chlorobenzene	108–90–7
2-Chloro-1,3-butadiene (Chloroprene)	126–99–8
Chloroform	67–66–3
m-Cresol	108–39–4
o-Cresol	95–48–7
p-Cresol	106–44–5
Cresols/cresylic acid	1319–77–3
Cumene	98–82–8
Dibenzofurans	132–64–9
Dibutylphthalate	84–74–2
Dichloroethane (1,2-) (Ethylene dichloride) (EDC)	107–06–2
Dichloropropene (1,3-)	542–75–6
Diethanolamine	111–42–2
Diethyl aniline (N,N-)	121–69–7
Diethylene glycol monobutyl ether	112–34–5
Diethylene glycol monomethyl ether	111–77–3
Diethyl sulfate	64–67–5
Dimethyl formamide	68–12–2
Dimethylhydrazine (1,1-)	57–14–7
Dioxane (1,4-) (1,4-Diethyleneoxide)	123–91–1
Epichlorohydrin (1-Chloro-2,3-epoxypropane)	106–89–8
Epoxybutane (1,2-)	106–88–7
Ethyl acrylate	140–88–5
Ethylbenzene	100–41–4
Ethyl chloride (Chloroethane)	75–00–3
Ethylene dibromide (Dibromomethane)	106–93–4
Ethylene glycol	107–21–1
Ethylene glycol dimethyl ether	110–71–4
Ethylene glycol monomethyl ether	109–86–4
Ethylene glycol monomethyl ether acetate	110–49–6
Ethylene glycol monophenyl ether	122–99–6
Ethylene oxide	75–21–8
Ethylidene dichloride (1,1-Dichloroethane)	75–34–3
Formaldehyde	50–00–0
Hexachloroethane	67–72–1
Hexane	110–54–3
Hydroquinone	123–31–9
Isophorone	78–59–1
Maleic anhydride	108–31–6
Methanol	67–56–1
Methyl chloride (Chloromethane)	74–87–3
Methylene chloride (Dichloromethane)	75–09–2
Methylenedianiline (4,4′-)	101–77–9
Methylene diphenyl diisocyanate	101–68–8
Methyl hydrazine	60–34–4
Methyl isobutyl ketone (Hexone) (MIBK)	108–10–1
Methyl methacrylate	80–62–6
Methyl tert-butyl ether (MTBE)	1634–04–4
Naphthalene	91–20–3
Nitrobenzene	98–95–3
Phenol	108–9–52
Phthalic anhydride	85–44–9
Polycyclic organic matter	50–32–8
Propionaldehyde	123–38–6
Propylene dichloride (1,2-Dichloropropane)	78–87–5
Propylene oxide	75–56–9
Quinoline	91–22–5
Styrene	100–42–5
Styrene oxide	96–09–3
Tetrachloroethane (1,1,2,2-)	79–34–5
Tetrachloroethylene (Perchloroethylene)	127–18–4
Toluene	108–88–3
Toluene diisocyanate (2,4-)	584–84–9
o-Toluidine	95–53–4
Trichlorobenzene (1,2,4-)	120–82–1
Trichloroethane (1,1,1-) (Methyl chloroform)	71–55–6
Trichloroethane (1,1,2-) (Vinyl trichloride)	79–00–5
Trichloroethylene	79–01–6
Triethylamine	121–44–8
Trimethylpentane (2,2,4-)	540–84–1
Vinyl acetate	108–05–4
Vinyl chloride (Chloroethylene)	75–01–4
Vinylidene chloride (1,1-Dichloroethylene)	75–35–4
Xylene (m-)	108–38–3

sfrattini on LAPJZKW1R2 with $$_JOB
VerDate Sep<11>2014 09:16 Apr 04, 2023 Jkt 256165 PO 00000 Frm 00413 Fmt 8010 Sfmt 8002 Q:\40\256165.XXX PC31

Compound name	CAS No.[1]
Xylene (o-)	95–47–6
Xylene (p-)	106–42–3
Xylenes (isomers and mixtures)	1330–20–7

[1] CAS numbers refer to the Chemical Abstracts Services registry number assigned to specific compounds, isomers, or mixtures of compounds.

[69 FR 5063, Feb. 3, 2004, as amended at 71 FR 42913, July 28, 2006]

TABLE 2 TO SUBPART EEEE OF PART 63—EMISSION LIMITS

If you own or operate . . .	And if . . .	Then you must . . .[1]
1. A storage tank at an existing affected source with a capacity ≥18.9 cubic meters (5,000 gallons) and <189.3 cubic meters (50,000 gallons)[2]	a. The stored organic liquid is not crude oil or condensate and if the annual average true vapor pressure of the total Table 1 organic HAP in the stored organic liquid is ≥27.6 kilopascals (4.0 psia) and <76.6 kilopascals (11.1 psia)	i. Reduce emissions of total organic HAP (or, upon approval, TOC) by at least 95 weight-percent or, as an option, to an exhaust concentration less than or equal to 20 ppmv, on a dry basis corrected to 3-percent oxygen for combustion devices using supplemental combustion air, by venting emissions through a closed vent system to any combination of control devices meeting the applicable requirements of subpart SS of this part and § 63.2346(l); OR ii. Comply with the work practice standards specified in Table 4 to this subpart, items 1.a, 1.b, or 1.c for tanks storing liquids described in that table.
	b. The stored organic liquid is crude oil or condensate	i. See the requirement in item 1.a.i or 1.a.ii of this table.
2. A storage tank at an existing affected source with a capacity ≥189.3 cubic meters (50,000 gallons)	a. The stored organic liquid is not crude oil or condensate and if the annual average true vapor pressure of the total Table 1 organic HAP in the stored organic liquid is <76.6 kilopascals (11.1 psia)	i. See the requirement in item 1.a.i or 1.a.ii of this table.
	b. The stored organic liquid is crude oil or condensate	i. See the requirement in item 1.a.i or 1.a.ii of this table.
3. A storage tank at a reconstructed or new affected source with a capacity ≥18.9 cubic meters (5,000 gallons) and <37.9 cubic meters (10,000 gallons)	a. The stored organic liquid is not crude oil or condensate and if the annual average true vapor pressure of the total Table 1 organic HAP in the stored organic liquid is ≥27.6 kilopascals (4.0 psia) and <76.6 kilopascals (11.1 psia)	i. See the requirement in item 1.a.i or 1.a.ii of this table.
	b. The stored organic liquid is crude oil or condensate	i. See the requirement in item 1.a.i or 1.a.ii of this table.
4. A storage tank at a reconstructed or new affected source with a capacity ≥37.9 cubic meters (10,000 gallons) and <189.3 cubic meters (50,000 gallons)	a. The stored organic liquid is not crude oil or condensate and if the annual average true vapor pressure of the total Table 1 organic HAP in the stored organic liquid is ≥0.7 kilopascals (0.1 psia) and <76.6 kilopascals (11.1 psia)	i. See the requirement in item 1.a.i or 1.a.ii of this table.
	b. The stored organic liquid is crude oil or condensate	i. See the requirement in item 1.a.i or 1.a.ii of this table.
5. A storage tank at a reconstructed or new affected source with a capacity ≥189.3 cubic meters (50,000 gallons)	a. The stored organic liquid is not crude oil or condensate and if the annual average true vapor pressure of the total Table 1 organic HAP in the stored organic liquid is <76.6 kilopascals (11.1 psia)	i. See the requirement in item 1.a.i or 1.a.ii of this table.
	b. The stored organic liquid is crude oil or condensate	i. See the requirement in item 1.a.i or 1.a.ii of this table.

sfrattini on LAPJZKW1R2 with $$_JOB
VerDate Sep<11>2014 09:16 Apr 04, 2023 Jkt 256165 PO 00000 Frm 00414 Fmt 8010 Sfmt 8002 Q:\40\256165.XXX PC31

If you own or operate . . .	And if . . .	Then you must . . .[1]
6. A storage tank at an existing, reconstructed, or new affected source meeting the capacity criteria specified in Table 2 to this subpart, items 1 through 5	a. The stored organic liquid is not crude oil or condensate and if the annual average true vapor pressure of the total Table 1 organic HAP in the stored organic liquid is ≥76.6 kilopascals (11.1 psia)	i. Reduce emissions of total organic HAP (or, upon approval, TOC) by at least 95 weight-percent or, as an option, to an exhaust concentration less than or equal to 20 ppmv, on a dry basis corrected to 3-percent oxygen for combustion devices using supplemental combustion air, by venting emissions through a closed vent system to any combination of control devices meeting the applicable requirements of subpart SS of this part and § 63.2346(l); OR ii. Comply with the work practice standards specified in Table 4 to this subpart, item 2.a or 2.b, for tanks storing the liquids described in that table.
7. A transfer rack at an existing facility where the total actual annual facility-level organic liquid loading volume through transfer racks is equal to or greater than 800,000 gallons and less than 10 million gallons	a. The total Table 1 organic HAP content of the organic liquid being loaded through one or more of the transfer rack's arms is at least 98 percent by weight and is being loaded into a transport vehicle	i. For all such loading arms at the rack, reduce emissions of total organic HAP (or, upon approval, TOC) from the loading of organic liquids either by venting the emissions that occur during loading through a closed vent system to any combination of control devices meeting the applicable requirements of subpart SS of this part and § 63.2346(l), achieving at least 98 weight-percent HAP reduction, OR, as an option, to an exhaust concentration less than or equal to 20 ppmv, on a dry basis corrected to 3-percent oxygen for combustion devices using supplemental combustion air; OR ii. During the loading of organic liquids, comply with the work practice standards specified in item 3 of Table 4 to this subpart.
8. A transfer rack at an existing facility where the total actual annual facility-level organic liquid loading volume through transfer racks is ≥10 million gallons	a. One or more of the transfer rack's arms is loading an organic liquid into a transport vehicle	i. See the requirements in items 7.a.i and 7.a.ii of this table.
9. A transfer rack at a new facility where the total actual annual facility-level organic liquid loading volume through transfer racks is less than 800,000 gallons	a. The total Table 1 organic HAP content of the organic liquid being loaded through one or more of the transfer rack's arms is at least 25 percent by weight and is being loaded into a transport vehicle	i. See the requirements in items 7.a.i and 7.a.ii of this table.
	b. One or more of the transfer rack's arms is filling a container with a capacity equal to or greater than 55 gallons	i. For all such loading arms at the rack during the loading of organic liquids, comply with the provisions of §§ 63.924 through 63.927; OR ii. During the loading of organic liquids, comply with the work practice standards specified in item 3.a of Table 4 to this subpart.
10. A transfer rack at a new facility where the total actual annual facility-level organic liquid loading volume through transfer racks is equal to or greater than 800,000 gallons	a. One or more of the transfer rack's arms is loading an organic liquid into a transport vehicle	i. See the requirements in items 7.a.i and 7.a.ii of this table.
	b. One or more of the transfer rack's arms is filling a container with a capacity equal to or greater than 55 gallons	i. For all such loading arms at the rack during the loading of organic liquids, comply with the provisions of §§ 63.924 through 63.927; OR ii. During the loading of organic liquids, comply with the work practice standards specified in item 3.a of Table 4 to this subpart.

[1] Beginning no later than the compliance dates specified in § 63.2342(e), for each storage tank and low throughput transfer rack, if you vent emissions through a closed vent system to a flare then you must comply with the requirements specified in § 63.2346(k).

sfrattini on LAPJZKW1R2 with $$_JOB
VerDate Sep<11>2014 09:16 Apr 04, 2023 Jkt 256165 PO 00000 Frm 00415 Fmt 8010 Sfmt 8002 Q:\40\256165.XXX PC31

[2] Beginning no later than the compliance dates specified in § 63.2342(e), the tank capacity criteria, liquid vapor pressure criteria, and emission limits specified for storage tanks at an existing affected source in Table 2 to this subpart, item 1 no longer apply. Instead, you must comply with the requirements as specified in § 63.2346(a)(5) and Table 2b to this subpart.

[85 FR 40774, July 7, 2020]

TABLE 2B TO SUBPART EEEE OF PART 63—EMISSION LIMITS FOR STORAGE TANKS AT CERTAIN EXISTING AFFECTED SOURCES

As stated in § 63.2346(a)(5), beginning no later than the compliance dates specified in § 63.2342(e), the requirements in this Table 2b to this subpart apply to storage tanks at an existing affected source in lieu of the requirements in Table 2 to this subpart, item 1 for storage tanks at an existing affected source.

If you own or operate . . .	And if . . .	Then you must . . .
1. A storage tank at an existing affected source with a capacity ≥18.9 cubic meters (5,000 gallons) and <75.7 cubic meters (20,000 gallons).	a. The stored organic liquid is not crude oil or condensate and if the annual average true vapor pressure of the total Table 1 organic HAP in the stored organic liquid is ≥27.6 kilopascals (4.0 psia).	i. Reduce emissions of total organic HAP (or, upon approval, TOC) by at least 95 weight-percent or, as an option, to an exhaust concentration less than or equal to 20 ppmv, on a dry basis corrected to 3- percent oxygen for combustion devices using supplemental combustion air, by venting emissions through a closed vent system to a flare meeting the requirements of §§ 63.983 and 63.2380, or by venting emissions through a closed vent system to any combination of nonflare control devices meeting the applicable requirements of subpart SS of this part and § 63.2346(l); OR. ii. Comply with the work practice standards specified in Table 4 to this subpart, items 1.a, 1.b, or 1.c for tanks storing liquids described in that table.
	b. The stored organic liquid is crude oil or condensate.	i. See the requirement in item 1.a.i or ii of this table.
2. A storage tank at an existing affected source with a capacity ≥75.7 cubic meters (20,000 gallons) and <151.4 cubic meters (40,000 gallons).	a. The stored organic liquid is not crude oil or condensate and if the annual average true vapor pressure of the total Table 1 organic HAP in the stored organic liquid is ≥13.1 kilopascals (1.9 psia).	i. See the requirement in item 1.a.i or ii of this table.
	b. The stored organic liquid is crude oil or condensate.	i. See the requirement in item 1.a.i or ii of this table.
3. A storage tank at an existing affected source with a capacity ≥151.4 cubic meters (40,000 gallons) and <189.3 cubic meters (50,000 gallons).	a. The stored organic liquid is not crude oil or condensate and if the annual average true vapor pressure of the total Table 1 organic HAP in the stored organic liquid is ≥5.2 kilopascals (0.75 psia).	i. See the requirement in item 1.a.i or ii of this table.
	b. The stored organic liquid is crude oil or condensate.	i. See the requirement in item 1.a.i or ii of this table.

[85 FR 40775, July 7, 2020]

TABLE 3 TO SUBPART EEEE OF PART 63—OPERATING LIMITS—HIGH THROUGHPUT TRANSFER RACKS

As stated in § 63.2346(e), you must comply with the operating limits for existing, reconstructed, or new affected sources as follows:

For each existing, each reconstructed, and each new affected source using . . .	You must . . .
1. A thermal oxidizer to comply with an emission limit in Table 2 to this subpart.	Maintain the daily average fire box or combustion zone temperature greater than or equal to the reference temperature established during the design evaluation or performance test that demonstrated compliance with the emission limit.
2. A catalytic oxidizer to comply with an emission limit in Table 2 to this subpart.	a. Replace the existing catalyst bed before the age of the bed exceeds the maximum allowable age established during the design evaluation or performance test that demonstrated compliance with the emission limit; AND

sfrattini on LAPJZKW1R2 with $$_JOB
VerDate Sep<11>2014 09:16 Apr 04, 2023 Jkt 256165 PO 00000 Frm 00416 Fmt 8010 Sfmt 8002 Q:\40\256165.XXX PC31

For each existing, each reconstructed, and each new affected source using . . .	You must . . .
	b. Maintain the daily average temperature at the inlet of the catalyst bed greater than or equal to the reference temperature established during the design evaluation or performance test that demonstrated compliance with the emission limit; AND
	c. Maintain the daily average temperature difference across the catalyst bed greater than or equal to the minimum temperature difference established during the design evaluation or performance test that demonstrated compliance with the emission limit.
3. An absorber to comply with an emission limit in Table 2 to this subpart.	a. Maintain the daily average concentration level of organic compounds in the absorber exhaust less than or equal to the reference concentration established during the design evaluation or performance test that demonstrated compliance with the emission limit; OR
	b. Maintain the daily average scrubbing liquid temperature less than or equal to the reference temperature established during the design evaluation or performance test that demonstrated compliance with the emission limit; AND
	Maintain the difference between the specific gravities of the saturated and fresh scrubbing fluids greater than or equal to the difference established during the design evaluation or performance test that demonstrated compliance with the emission limit.
4. A condenser to comply with an emission limit in Table 2 to this subpart.	a. Maintain the daily average concentration level of organic compounds at the condenser exit less than or equal to the reference concentration established during the design evaluation or performance test that demonstrated compliance with the emission limit; OR
	b. Maintain the daily average condenser exit temperature less than or equal to the reference temperature established during the design evaluation or performance test that demonstrated compliance with the emission limit.
5. An adsorption system with adsorbent regeneration to comply with an emission limit in Table 2 to this subpart.	a. Maintain the daily average concentration level of organic compounds in the adsorber exhaust less than or equal to the reference concentration established during the design evaluation or performance test that demonstrated compliance with the emission limit; OR
	b. Maintain the total regeneration stream mass flow during the adsorption bed regeneration cycle greater than or equal to the reference stream mass flow established during the design evaluation or performance test that demonstrated compliance with the emission limit; AND
	Before the adsorption cycle commences, achieve and maintain the temperature of the adsorption bed after regeneration less than or equal to the reference temperature established during the design evaluation or performance test that demonstrated compliance with the emission limit; AND
	Achieve a pressure reduction during each adsorption bed regeneration cycle greater than or equal to the pressure reduction established during the design evaluation or performance test that demonstrated compliance with the emission limit.
6. An adsorption system without adsorbent regeneration to comply with an emission limit in Table 2 to this subpart.	a. Maintain the daily average concentration level of organic compounds in the adsorber exhaust less than or equal to the reference concentration established during the design evaluation or performance test that demonstrated compliance with the emission limit; OR
	b. Replace the existing adsorbent in each segment of the bed with an adsorbent that meets the replacement specifications established during the design evaluation or performance test before the age of the adsorbent exceeds the maximum allowable age established during the design evaluation or performance test that demonstrated compliance with the emission limit; AND
	Maintain the temperature of the adsorption bed less than or equal to the reference temperature established during the design evaluation or performance test that demonstrated compliance with the emission limit.
7. A flare to comply with an emission limit in Table 2 to this subpart.	a. Except as specified in item 7.d of this table, comply with the equipment and operating requirements in § 63.987(a); AND
	b. Except as specified in item 7.d of this table, conduct an initial flare compliance assessment in accordance with § 63.987(b); AND
	c. Except as specified in item 7.d of this table, install and operate monitoring equipment as specified in § 63.987(c).
	d. Beginning no later than the compliance dates specified in § 63.2342(e), comply with the requirements in § 63.2380 instead of the requirements in § 63.987 and the provisions regarding flare compliance assessments at § 63.997(a), (b), and (c).
8. Another type of control device to comply with an emission limit in Table 2 to this subpart.	Submit a monitoring plan as specified in §§ 63.995(c) and 63.2366(b), and monitor the control device in accordance with that plan.

[85 FR 40776, July 7, 2020]

sfrattini on LAPJZKW1R2 with $$_JOB
VerDate Sep<11>2014 09:16 Apr 04, 2023 Jkt 256165 PO 00000 Frm 00417 Fmt 8010 Sfmt 8026 Q:\40\256165.XXX PC31

TABLE 4 TO SUBPART EEEE OF PART 63—WORK PRACTICE STANDARDS

As stated in § 63.2346, you may elect to comply with one of the work practice standards for existing, reconstructed, or new affected sources in the following table. If you elect to do so, . . .

For each . . .	You must . . .
1. Storage tank at an existing, reconstructed, or new affected source meeting any set of tank capacity and organic HAP vapor pressure criteria specified in Table 2 to this subpart, items 1 through 5 or Table 2b to this subpart, items 1 through 3.	a. Comply with the requirements of 40 CFR part 63, subpart WW (control level 2), if you elect to meet 40 CFR part 63, subpart WW (control level 2) requirements as an alternative to the emission limit in Table 2 to this subpart, items 1 through 5 or the emission limit in Table 2b to this subpart, items 1 through 3; OR. b. Comply with the requirements in §§ 63.2346(l) and 63.984 for routing emissions to a fuel gas system or back to a process; OR. c. Comply with the requirements of § 63.2346(a)(4) for vapor balancing emissions to the transport vehicle from which the storage tank is filled.
2. Storage tank at an existing, reconstructed, or new affected source meeting any set of tank capacity and organic HAP vapor pressure criteria specified in Table 2 to this subpart, item 6.	a. Comply with the requirements in §§ 63.2346(l) and 63.984 for routing emissions to a fuel gas system or back to a process; OR b. Comply with the requirements of § 63.2346(a)(4) for vapor balancing emissions to the transport vehicle from which the storage tank is filled.
3. Transfer rack subject to control based on the criteria specified in Table 2 to this subpart, items 7 through 10, at an existing, reconstructed, or new affected source.	a. If the option of a vapor balancing system is selected, install and, during the loading of organic liquids, operate a system that meets the requirements in Table 7 to this subpart, item 3.b.i and item 3.b.ii, as applicable; OR b. Comply with the requirements in §§ 63.2346(l) and 63.984 during the loading of organic liquids, for routing emissions to a fuel gas system or back to a process.
4. Pump, valve, and sampling connection that operates in organic liquids service at least 300 hours per year at an existing, reconstructed, or new affected source.	Comply with § 63.2346(l) and the requirements for pumps, valves, and sampling connections in 40 CFR part 63, subpart TT (control level 1), subpart UU (control level 2), or subpart H.
5. Transport vehicles equipped with vapor collection equipment that are loaded at transfer racks that are subject to control based on the criteria specified in Table 2 to this subpart, items 7 through 10.	Follow the steps in 40 CFR 60.502(e) to ensure that organic liquids are loaded only into vapor-tight transport vehicles, and comply with the provisions in 40 CFR 60.502(f), (g), (h), and (i), except substitute the term transport vehicle at each occurrence of tank truck or gasoline tank truck in those paragraphs.
6. Transport vehicles equipped without vapor collection equipment that are loaded at transfer racks that are subject to control based on the criteria specified in Table 2 to this subpart, items 7 through 10.	Ensure that organic liquids are loaded only into transport vehicles that have a current certification in accordance with the U.S. DOT qualification and maintenance requirements in 49 CFR part 180, subpart E for cargo tanks and subpart F for tank cars.

[85 FR 40777, July 7, 2020]

TABLE 5 TO SUBPART EEEE OF PART 63—REQUIREMENTS FOR PERFORMANCE TESTS AND DESIGN EVALUATIONS

As stated in §§ 63.2354(a) and 63.2362, you must comply with the requirements for performance tests and design evaluations for existing, reconstructed, or new affected sources as follows:

sfrattini on LAPJZKW1R2 with $$_JOB
VerDate Sep<11>2014 09:16 Apr 04, 2023 Jkt 256165 PO 00000 Frm 00418 Fmt 8010 Sfmt 8026 Q:\40\256165.XXX PC31

For . . .	You must conduct . . .	According to . . .	Using . . .	To determine . . .	According to the following requirements . . .
1. Each existing, each reconstructed, and each new affected source using a nonflare control device to comply with an emission limit in Table 2 to this subpart, items 1 through 10, and each existing affected source using a nonflare control device to comply with an emission limit in Table 2b to this subpart, items 1 through 3.	a. A performance test to determine the organic HAP (or, upon a pproval, TOC) control efficiency of each nonflare control device, OR the exhaust concentration of each combustion device; OR	i. § 63.985(b)(1)(ii), § 63.988(b), § 63.990(b), or § 63.995(b).	(1) Method 1 or 1A in appendix A–1 of 40 CFR part 60, as appropriate.	(A) Sampling port locations and the required number of traverse points.	(i) Sampling sites must be located at the inlet and outlet of each control device if complying with the control efficiency requirement or at the outlet of the control device if complying with the exhaust concentration requirement; AND (ii) the outlet sampling site must be located at each control device prior to any releases to the atmosphere.
			(2) Method 2, 2A, 2C, 2D, or 2F in appendix A–1 of 40 CFR part 60, or Method 2G in appendix A–2 of 40 CFR part 60, as appropriate.	(A) Stack gas velocity and volumetric flow rate.	See the requirements in items 1.a.i.(1)(A)(i) and (ii) of this table.
			(3) Method 3A or 3B in appendix A–2 of 40 CFR part 60, as appropriate [1].	(A) Concentration of CO_2 and O_2 and dry molecular weight of the stack gas.	See the requirements in items 1.a.i.(1)(A)(i) and (ii) of this table.
			(4) Method 4 in appendix A–3 of 40 CFR part 60.	(A) Moisture content of the stack gas.	See the requirements in items 1.a.i.(1)(A)(i) and (ii) of this table.
			(5) Method 25 or 25A in appendix A–7 of 40 CFR part 60, as appropriate. Method 316, Method 320 [4], or Method 323 in appendix A of this part if you must measure formaldehyde. You may not use Methods 320 [2 4] or 323 for formaldehyde if the gas stream contains entrained water droplets.	(A) TOC and formaldehyde emissions, from any control device.	(i) The organic HAP used for the calibration gas for Method 25A in appendix A–7 of 40 CFR part 60 must be the single organic HAP representing the largest percent by volume of emissions; AND (ii) During the performance test, you must establish the operating parameter limits within which TOC emissions are reduced by the required weight-percent or, as an option for nonflare combustion devices, to 20-ppmv exhaust concentration.

sfrattini on LAPJZKW1R2 with $$_JOB
VerDate Sep<11>2014 09:16 Apr 04, 2023 Jkt 256165 PO 00000 Frm 00419 Fmt 8010 Sfmt 8002 Q:\40\256165.XXX PC31

For . . .	You must conduct . . .	According to . . .	Using . . .	To determine . . .	According to the following requirements . . .
			(6) Method 18[3] in appendix A–6 of 40 CFR part 60 or Method 320[2 4] of appendix A to this part, as appropriate. Method 316, Method 320[2 4], or Method 323 in appendix A of this part for measuring formaldehyde. You may not use Methods 320 or 323 if the gas stream contains entrained water droplets.	(A) Total organic HAP and formaldehyde emissions, from noncombustion control devices.	(i) During the performance test, you must establish the operating parameter limits within which total organic HAP emissions are reduced by the required weight-percent.
	b. A design evaluation (for nonflare control devices) to determine the organic HAP (or, upon approval, TOC) control efficiency of each nonflare control device, or the exhaust concentration of each combustion control device.	§ 63.985(b)(1)(i)			During a design evaluation, you must establish the operating parameter limits within which total organic HAP, (or, upon approval, TOC) emissions are reduced by at least 95 weight-percent for storage tanks or 98 weight-percent for transfer racks, or, as an option for nonflare combustion devices, to 20-ppmv exhaust concentration.
2. Each transport vehicle that you own that is equipped with vapor collection equipment and is loaded with organic liquids at a transfer rack that is subject to control based on the criteria specified in Table 2 to this subpart, items 7 through 10, at an existing, reconstructed, or new affected source.	A performance test to determine the vapor tightness of the tank and then repair as needed until it passes the test.		Method 27 of appendix A of 40 CFR part 60.	Vapor tightness	The pressure change in the tank must be no more than 250 pascals (1 inch of water) in 5 minutes after it is pressurized to 4,500 pascals (18 inches of water).

[1] The manual method in American Society of Mechanical Engineers (ASME) PTC 19.10–1981-Part 10 (2010) (incorporated by reference, see § 63.14) may be used instead of Method 3B in appendix A–2 of 40 CFR part 60 to determine oxygen concentration.

[2] All compounds quantified by Method 320 of appendix A to this part must be validated according to Section 13.0 of Method 320.

[3] ASTM D6420–18 (incorporated by reference, see § 63.14) may be used instead of Method 18 of 40 CFR part 60, appendix A–6 to determine total HAP emissions, but if you use ASTM D6420–18, you must use it under the conditions specified in § 63.2354(b)(3)(ii).

sfrattini on LAPJZKW1R2 with $$_JOB
VerDate Sep<11>2014 09:16 Apr 04, 2023 Jkt 256165 PO 00000 Frm 00420 Fmt 8010 Sfmt 8002 Q:\40\256165.XXX PC31

[4] ASTM D6348–12e1 (incorporated by reference, see § 63.14) may be used instead of Method 320 of appendix A to this part under the following conditions: the test plan preparation and implementation in the Annexes to ASTM D6348–12e1, Sections A1 through A8 are mandatory; the percent (%) R must be determined for each target analyte (Equation A5.5); %R must be 70% ≥ R ≤ 130%; if the %R value does not meet this criterion for a target compound, then the test data is not acceptable for that compound and the test must be repeated for that analyte (*i.e.,* the sampling and/or analytical procedure should be adjusted before a retest); and the %R value for each compound must be reported in the test report and all field measurements must be corrected with the calculated %R value for that compound by using the following equation: Reported Results = ((Measured Concentration in Stack))/(%R) × 100.

[85 FR 40778, July 7, 2020]

TABLE 6 TO SUBPART EEEE OF PART 63—INITIAL COMPLIANCE WITH EMISSION LIMITS

As stated in §§ 63.2370(a) and 63.2382(b), you must show initial compliance with the emission limits for existing, reconstructed, or new affected sources as follows:

For each . . .	For the following emission limit . . .	You have demonstrated initial compliance if . . .
1. Storage tank at an existing, reconstructed, or new affected source meeting any set of tank capacity and liquid organic HAP vapor pressure criteria specified in Table 2 to this subpart, items 1 through 6, or Table 2b to this subpart, items 1 through 3.	Reduce total organic HAP (or, upon approval, TOC) emissions by at least 95 weight-percent, or as an option for nonflare combustion devices to an exhaust concentration of ≤20 ppmv.	Total organic HAP (or, upon approval, TOC) emissions, based on the results of the performance testing or design evaluation specified in Table 5 to this subpart, item 1.a or 1.b, respectively, are reduced by at least 95 weight-percent or as an option for nonflare combustion devices to an exhaust concentration ≤20 ppmv.
2. Transfer rack that is subject to control based on the criteria specified in Table 2 to this subpart, items 7 through 10, at an existing, reconstructed, or new affected source.	Reduce total organic HAP (or, upon approval, TOC) emissions from the loading of organic liquids by at least 98 weight-percent, or as an option for nonflare combustion devices to an exhaust concentration of ≤20 ppmv.	Total organic HAP (or, upon approval, TOC) emissions from the loading of organic liquids, based on the results of the performance testing or design evaluation specified in Table 5 to this subpart, item 1.a or 1.b, respectively, are reduced by at least 98 weight-percent or as an option for nonflare combustion devices to an exhaust concentration of ≤20 ppmv.

[85 FR 40780, July 7, 2020]

TABLE 7 TO SUBPART EEEE OF PART 63—INITIAL COMPLIANCE WITH WORK PRACTICE STANDARDS

For each . . .	If you . . .	You have demonstrated initial compliance if . . .
1. Storage tank at an existing affected source meeting either set of tank capacity and liquid organic HAP vapor pressure criteria specified in Table 2 to this subpart, items 1 or 2, or Table 2b to this subpart, items 1 through 3.	a. Install a floating roof or equivalent control that meets the requirements in Table 4 to this subpart, item 1.a.	i. After emptying and degassing, you visually inspect each internal floating roof before the refilling of the storage tank and perform seal gap inspections of the primary and secondary rim seals of each external floating roof within 90 days after the refilling of the storage tank.
	b. Route emissions to a fuel gas system or back to a process.	i. You meet the requirements in § 63.984(b) and submit the statement of connection required by § 63.984(c).
	c. Install and, during the filling of the storage tank with organic liquids, operate a vapor balancing system.	i. You meet the requirements in § 63.2346(a)(4).
2. Storage tank at a reconstructed or new affected source meeting any set of tank capacity and liquid organic HAP vapor pressure criteria specified in Table 2 to this subpart, items 3 through 5.	a. Install a floating roof or equivalent control that meets the requirements in Table 4 to this subpart, item 1.a.	i. You visually inspect each internal floating roof before the initial filling of the storage tank and perform seal gap inspections of the primary and secondary rim seals of each external floating roof within 90 days after the initial filling of the storage tank.
	b. Route emissions to a fuel gas system or back to a process.	i. See item 1.b.i of this table.
	c. Install and, during the filling of the storage tank with organic liquids, operate a vapor balancing system.	i. See item 1.c.i of this table.

sfrattini on LAPJZKW1R2 with $$_JOB
VerDate Sep<11>2014 09:16 Apr 04, 2023 Jkt 256165 PO 00000 Frm 00421 Fmt 8010 Sfmt 8002 Q:\40\256165.XXX PC31

For each . . .	If you . . .	You have demonstrated initial compliance if . . .
3. Transfer rack that is subject to control based on the criteria specified in Table 2 to this subpart, items 7 through 10, at an existing, reconstructed, or new affected source.	a. Load organic liquids only into transport vehicles having current vapor tightness certification as described in Table 4 to this subpart, item 5 and item 6.	i. You comply with the provisions specified in Table 4 to this subpart, item 5 or item 6, as applicable.
	b. Install and, during the loading of organic liquids, operate a vapor balancing system.	i. You design and operate the vapor balancing system to route organic HAP vapors displaced from loading of organic liquids into transport vehicles to the storage tank from which the liquid being loaded originated or to another storage tank connected to a common header. ii. You design and operate the vapor balancing system to route organic HAP vapors displaced from loading of organic liquids into containers directly (*e.g.,* no intervening tank or containment area such as a room) to the storage tank from which the liquid being loaded originated or to another storage tank connected to a common header.
	c. Route emissions to a fuel gas system or back to a process.	i. See item 1.b.i of this table.
4. Equipment leak component, as defined in § 63.2406, that operates in organic liquids service ≥300 hours per year at an existing, reconstructed, or new affected source.	a. Carry out a leak detection and repair program or equivalent control according to one of the subparts listed in Table 4 to this subpart, item 4.	i. You specify which one of the control programs listed in Table 4 to this subpart you have selected, OR ii. Provide written specifications for your equivalent control approach.

[85 FR 40780, July 7, 2020]

TABLE 8 TO SUBPART EEEE OF PART 63—CONTINUOUS COMPLIANCE WITH EMISSION LIMITS

As stated in §§ 63.2378(a) and (b) and 63.2390(b), you must show continuous compliance with the emission limits for existing, reconstructed, or new affected sources according to the following table:

For each . . .	For the following emission limit . . .	You must demonstrate continuous compliance by . . .
1. Storage tank at an existing, reconstructed, or new affected source meeting any set of tank capacity and liquid organic HAP vapor pressure criteria specified in Table 2 to this subpart, items 1 through 6 or Table 2b to this subpart, items 1 through 3.	a. Reduce total organic HAP (or, upon approval, TOC) emissions from the closed vent system and control device by 95 weight-percent or greater, or as an option to 20 ppmv or less of total organic HAP (or, upon approval, TOC) in the exhaust of combustion devices.	i. Performing CMS monitoring and collecting data according to §§ 63.2366, 63.2374, and 63.2378, except as specified in item 1.a.iii of this table; AND ii. Maintaining the operating limits established during the design evaluation or performance test that demonstrated compliance with the emission limit. iii. Beginning no later than the compliance dates specified in § 63.2342(e), if you use a flare, you must demonstrate continuous compliance by performing CMS monitoring and collecting data according to requirements in § 63.2380.

sfrattini on LAPJZKW1R2 with $$_JOB
VerDate Sep<11>2014 09:16 Apr 04, 2023 Jkt 256165 PO 00000 Frm 00422 Fmt 8010 Sfmt 8002 Q:\40\256165.XXX PC31

For each . . .	For the following emission limit . . .	You must demonstrate continuous compliance by . . .
2. Transfer rack that is subject to control based on the criteria specified in Table 2 to this subpart, items 7 through 10, at an existing, reconstructed, or new affected source.	a. Reduce total organic HAP (or, upon approval, TOC) emissions during the loading of organic liquids from the closed vent system and control device by 98 weight-percent or greater, or as an option to 20 ppmv or less of total organic HAP (or, upon approval, TOC) in the exhaust of combustion devices.	i. Performing CMS monitoring and collecting data according to §§ 63.2366, 63.2374, and 63.2378 during the loading of organic liquids, except as specified in item 2.a.iii of this table; AND ii. Maintaining the operating limits established during the design evaluation or performance test that demonstrated compliance with the emission limit during the loading of organic liquids. iii. Beginning no later than the compliance dates specified in § 63.2342(e), if you use a flare, you must demonstrate continuous compliance by performing CMS monitoring and collecting data according to requirements in § 63.2380.

[85 FR 40781, July 7, 2020]

Table 9 to Subpart EEEE of Part 63—Continuous Compliance with Operating Limits—High Throughput Transfer Racks

As stated in §§ 63.2378(a) and (b) and 63.2390(b), you must show continuous compliance with the operating limits for existing, reconstructed, or new affected sources according to the following table:

For each existing, reconstructed, and each new affected source using . . .	For the following operating limit . . .	You must demonstrate continuous compliance by . . .
1. A thermal oxidizer to comply with an emission limit in Table 2 to this subpart	a. Maintain the daily average fire box or combustion zone, as applicable, temperature greater than or equal to the reference temperature established during the design evaluation or performance test that demonstrated compliance with the emission limit	i. Continuously monitoring and recording fire box or combustion zone, as applicable, temperature every 15 minutes and maintaining the daily average fire box temperature greater than or equal to the reference temperature established during the design evaluation or performance test that demonstrated compliance with the emission limit; AND ii. Keeping the applicable records required in § 63.998.[1]
2. A catalytic oxidizer to comply with an emission limit in Table 2 to this subpart	a. Replace the existing catalyst bed before the age of the bed exceeds the maximum allowable age established during the design evaluation or performance test that demonstrated compliance with the emission limit; AND	i. Replacing the existing catalyst bed before the age of the bed exceeds the maximum allowable age established during the design evaluation or performance test that demonstrated compliance with the emission limit; AND ii. Keeping the applicable records required in § 63.998.[1]
	b. Maintain the daily average temperature at the inlet of the catalyst bed greater than or equal to the reference temperature established during the design evaluation or performance test that demonstrated compliance with the emission limit; AND	i. Continuously monitoring and recording the temperature at the inlet of the catalyst bed at least every 15 minutes and maintaining the daily average temperature at the inlet of the catalyst bed greater than or equal to the reference temperature established during the design evaluation or performance test that demonstrated compliance with the emission limit; AND ii. Keeping the applicable records required in § 63.998.[1]

sfrattini on LAPJZKW1R2 with $$_JOB
VerDate Sep<11>2014 09:16 Apr 04, 2023 Jkt 256165 PO 00000 Frm 00423 Fmt 8010 Sfmt 8002 Q:\40\256165.XXX PC31

For each existing, reconstructed, and each new affected source using . . .	For the following operating limit . . .	You must demonstrate continuous compliance by . . .
	c. Maintain the daily average temperature difference across the catalyst bed greater than or equal to the minimum temperature difference established during the design evaluation or performance test that demonstrated compliance with the emission limit	i. Continuously monitoring and recording the temperature at the outlet of the catalyst bed every 15 minutes and maintaining the daily average temperature difference across the catalyst bed greater than or equal to the minimum temperature difference established during the design evaluation or performance test that demonstrated compliance with the emission limit; AND ii. Keeping the applicable records required in § 63.998.[1]
3. An absorber to comply with an emission limit in Table 2 to this subpart	a. Maintain the daily average concentration level of organic compounds in the absorber exhaust less than or equal to the reference concentration established during the design evaluation or performance test that demonstrated compliance with the emission limit; OR	i. Continuously monitoring the organic concentration in the absorber exhaust and maintaining the daily average concentration less than or equal to the reference concentration established during the design evaluation or performance test that demonstrated compliance with the emission limit; AND ii. Keeping the applicable records required in § 63.998.[1]
	b. Maintain the daily average scrubbing liquid temperature less than or equal to the reference temperature established during the design evaluation or performance test that demonstrated compliance with the emission limit; AND	i. Continuously monitoring the scrubbing liquid temperature and maintaining the daily average temperature less than or equal to the reference temperature established during the design evaluation or performance test that demonstrated compliance with the emission limit; AND
	Maintain the difference between the specific gravities of the saturated and fresh scrubbing fluids greater than or equal to the difference established during the design evaluation or performance test that demonstrated compliance with the emission limit	ii. Maintaining the difference between the specific gravities greater than or equal to the difference established during the design evaluation or performance test that demonstrated compliance with the emission limit; AND iii. Keeping the applicable records required in § 63.998.[1]
4. A condenser to comply with an emission limit in Table 2 to this subpart	a. Maintain the daily average concentration level of organic compounds at the exit of the condenser less than or equal to the reference concentration established during the design evaluation or performance test that demonstrated compliance with the emission limit; OR	i. Continuously monitoring the organic concentration at the condenser exit and maintaining the daily average concentration less than or equal to the reference concentration established during the design evaluation or performance test that demonstrated compliance with the emission limit; AND ii. Keeping the applicable records required in § 63.998.[1]
	b. Maintain the daily average condenser exit temperature less than or equal to the reference temperature established during the design evaluation or performance test that demonstrated compliance with the emission limit	i. Continuously monitoring and recording the temperature at the exit of the condenser at least every 15 minutes and maintaining the daily average temperature less than or equal to the reference temperature established during the design evaluation or performance test that demonstrated compliance with the emission limit; AND ii. Keeping the applicable records required in § 63.998.[1]
5. An adsorption system with adsorbent regeneration to comply with an emission limit in Table 2 to this subpart	a. Maintain the daily average concentration level of organic compounds in the adsorber exhaust less than or equal to the reference concentration established during the design evaluation or performance test that demonstrated compliance with the emission limit; OR	i. Continuously monitoring the daily average organic concentration in the adsorber exhaust and maintaining the concentration less than or equal to the reference concentration established during the design evaluation or performance test that demonstrated compliance with the emission limit; AND ii. Keeping the applicable records required in § 63.998.[1]

sfrattini on LAPJZKW1R2 with $$_JOB
VerDate Sep<11>2014 09:16 Apr 04, 2023 Jkt 256165 PO 00000 Frm 00424 Fmt 8010 Sfmt 8002 Q:\40\256165.XXX PC31

For each existing, reconstructed, and each new affected source using . . .	For the following operating limit . . .	You must demonstrate continuous compliance by . . .
	b. Maintain the total regeneration stream mass flow during the adsorption bed regeneration cycle greater than or equal to the reference stream mass flow established during the design evaluation or performance test that demonstrated compliance with the emission limit; AND	i. Maintaining the total regeneration stream mass flow during the adsorption bed regeneration cycle greater than or equal to the reference stream mass flow established during the design evaluation or performance test that demonstrated compliance with the emission limit; AND
	Before the adsorption cycle commences, achieve and maintain the temperature of the adsorption bed after regeneration less than or equal to the reference temperature established during the design evaluation or performance test; AND	ii. Maintaining the temperature of the adsorption bed after regeneration less than or equal to the reference temperature established during the design evaluation or performance test that demonstrated compliance with the emission limit; AND
	Achieve greater than or equal to the pressure reduction during the adsorption bed regeneration cycle established during the design evaluation or performance test that demonstrated compliance with the emission limit	iii. Achieving greater than or equal to the pressure reduction during the regeneration cycle established during the design evaluation or performance test that demonstrated compliance with the emission limit; AND iv. Keeping the applicable records required in § 63.998.[1]
6. An adsorption system without adsorbent regeneration to comply with an emission limit in Table 2 to this subpart	a. Maintain the daily average concentration level of organic compounds in the adsorber exhaust less than or equal to the reference concentration established during the design evaluation or performance test that demonstrated compliance with the emission limit; OR	i. Continuously monitoring the organic concentration in the adsorber exhaust and maintaining the concentration less than or equal to the reference concentration established during the design evaluation or performance test that demonstrated compliance with the emission limit; AND ii. Keeping the applicable records required in § 63.998.[1]
	b. Replace the existing adsorbent in each segment of the bed before the age of the adsorbent exceeds the maximum allowable age established during the design evaluation or performance test that demonstrated compliance with the emission limit; AND	i. Replacing the existing adsorbent in each segment of the bed with an adsorbent that meets the replacement specifications established during the design evaluation or performance test before the age of the adsorbent exceeds the maximum allowable age established during the design evaluation or performance test that demonstrated compliance with the emission limit; AND
	Maintain the temperature of the adsorption bed less than or equal to the reference temperature established during the design evaluation or performance test that demonstrated compliance with the emission limit	ii. Maintaining the temperature of the adsorption bed less than or equal to the reference temperature established during the design evaluation or performance test that demonstrated compliance with the emission limit; AND iii. Keeping the applicable records required in § 63.998.[1]
7. A flare to comply with an emission limit in Table 2 to this subpart	a. Except as specified in item 7.e of this table, maintain a pilot flame or flare flame in the flare at all times that vapors may be vented to the flare (§ 63.11(b)(5)); AND	i. Continuously operating a device that detects the presence of the pilot flame or flare flame; AND ii. Keeping the applicable records required in § 63.998.[1]
	b. Except as specified in item 7.e of this table, maintain a flare flame at all times that vapors are being vented to the flare (§ 63.11(b)(5)); AND	i. Maintaining a flare flame at all times that vapors are being vented to the flare; AND ii. Keeping the applicable records required in § 63.998.[1]
	c. Except as specified in item 7.e of this table, operate the flare with no visible emissions, except for up to 5 minutes in any 2 consecutive hours (§ 63.11(b)(4)); AND EITHER	i. Operating the flare with no visible emissions exceeding the amount allowed; AND ii. Keeping the applicable records required in § 63.998.[1]

sfrattini on LAPJZKW1R2 with $$_JOB
VerDate Sep<11>2014 09:16 Apr 04, 2023 Jkt 256165 PO 00000 Frm 00425 Fmt 8010 Sfmt 8002 Q:\40\256165.XXX PC31

For each existing, reconstructed, and each new affected source using . . .	For the following operating limit . . .	You must demonstrate continuous compliance by . . .
	d.1. Except as specified in item 7.e of this table, operate the flare with an exit velocity that is within the applicable limits in § 63.11(b)(7) and (8) and with a net heating value of the gas being combusted greater than the applicable minimum value in § 63.11(b)(6)(ii); OR	i. Operating the flare within the applicable exit velocity limits; AND ii. Operating the flare with the gas heating value greater than the applicable minimum value; AND iii. Keeping the applicable records required in § 63.998.[1]
	d.2. Except as specified in item 7.e of this table, adhere to the requirements in § 63.11(b)(6)(i)	i. Operating the flare within the applicable limits in 63.11(b)(6)(i); AND ii. Keeping the applicable records required in § 63.998.[1]
	e. Beginning no later than the compliance dates specified in § 63.2342(e), comply with the requirements in § 63.2380 instead of the requirements in § 63.11(b)	i. Operating the flare with the applicable limits in § 63.2380; AND ii. Keeping the applicable records required in § 63.2390(h).
8. Another type of control device to comply with an emission limit in Table 2 to this subpart	Submit a monitoring plan as specified in §§ 63.995(c) and 63.2366(b) and monitor the control device in accordance with that plan	Submitting a monitoring plan and monitoring the control device according to that plan.

[1] Beginning no later than the compliance dates specified in § 63.2342(e), the referenced provisions specified in § 63.2346(l) do not apply.

[85 FR 40782, July 7, 2020]

TABLE 10 TO SUBPART EEEE OF PART 63—CONTINUOUS COMPLIANCE WITH WORK PRACTICE STANDARDS

As stated in §§ 63.2378(a) and (b) and 63.2386(c)(6), you must show continuous compliance with the work practice standards for existing, reconstructed, or new affected sources according to the following table:

For each . . .	For the following standard . . .	You must demonstrate continuous compliance by . . .
1. Internal floating roof (IFR) storage tank at an existing, reconstructed, or new affected source meeting any set of tank capacity, and vapor pressure criteria specified in Table 2 to this subpart, items 1 through 5, or Table 2b to this subpart, items 1 through 3	a. Install a floating roof designed and operated according to the applicable specifications in § 63.1063(a) and (b)	i. Visually inspecting the floating roof deck, deck fittings, and rim seals of each IFR once per year (§ 63.1063(d)(2)); AND ii. Visually inspecting the floating roof deck, deck fittings, and rim seals of each IFR either each time the storage tank is completely emptied and degassed or every 10 years, whichever occurs first (§ 63.1063(c)(1), (d)(1), and (e)); AND iii. Keeping the tank records required in § 63.1065.
2. External floating roof (EFR) storage tank at an existing, reconstructed, or new affected source meeting any set of tank capacity and vapor pressure criteria specified in Table 2 to this subpart, items 1 through 5, or Table 2b to this subpart, items 1 through 3	a. Install a floating roof designed and operated according to the applicable specifications in § 63.1063(a) and (b)	i. Visually inspecting the floating roof deck, deck fittings, and rim seals of each EFR either each time the storage tank is completely emptied and degassed or every 10 years, whichever occurs first (§ 63.1063(c)(2), (d), and (e)); AND ii. Performing seal gap measurements on the secondary seal of each EFR at least once every year, and on the primary seal of each EFR at least every 5 years (§ 63.1063(c)(2), (d), and (e)); AND iii. Keeping the tank records required in § 63.1065.

sfrattini on LAPJZKW1R2 with $$_JOB
VerDate Sep<11>2014 09:16 Apr 04, 2023 Jkt 256165 PO 00000 Frm 00426 Fmt 8010 Sfmt 8002 Q:\40\256165.XXX PC31

For each . . .	For the following standard . . .	You must demonstrate continuous compliance by . . .
3. IFR or EFR tank at an existing, reconstructed, or new affected source meeting any set of tank capacity and vapor pressure criteria specified in Table 2 to this subpart, items 1 through 5, or Table 2b to this subpart, items 1 through 3	a. Repair the conditions causing storage tank inspection failures (§ 63.1063(e))	i. Repairing conditions causing inspection failures: Before refilling the storage tank with organic liquid, or within 45 days (or up to 105 days with extensions) for a tank containing organic liquid; AND ii. Keeping the tank records required in § 63.1065(b).
4. Transfer rack that is subject to control based on the criteria specified in Table 2 to this subpart, items 7 through 10, at an existing, reconstructed, or new affected source	a. Ensure that organic liquids are loaded into transport vehicles in accordance with the requirements in Table 4 to this subpart, items 5 or 6, as applicable	i. Ensuring that organic liquids are loaded into transport vehicles in accordance with the requirements in Table 4 to this subpart, items 5 or 6, as applicable.
	b. Install and, during the loading of organic liquids, operate a vapor balancing system	i. Monitoring each potential source of vapor leakage in the system quarterly during the loading of a transport vehicle or the filling of a container using the methods and procedures described in the rule requirements selected for the work practice standard for equipment leak components as specified in Table 4 to this subpart, item 4. An instrument reading of 500 ppmv defines a leak. Repair of leaks is performed according to the repair requirements specified in your selected equipment leak standards
	c. Route emissions to a fuel gas system or back to a process	i. Continuing to meet the requirements specified in § 63.984(b)
5. Equipment leak component, as defined in § 63.2406, that operates in organic liquids service at least 300 hours per year	a. Comply with § 63.2346(l) and the requirements of 40 CFR part 63, subpart TT, UU, or H	i. Carrying out a leak detection and repair program in accordance with the subpart selected from the list in item 5.a of this table
6. Storage tank at an existing, reconstructed, or new affected source meeting any of the tank capacity and vapor pressure criteria specified in Table 2 to this subpart, items 1 through 6, or Table 2b to this subpart, items 1 through 3	a. Route emissions to a fuel gas system or back to the process	i. Continuing to meet the requirements specified in § 63.984(b)
	b. Install and, during the filling of the storage tank with organic liquids, operate a vapor balancing system	i. Except for pressure relief devices, monitoring each potential source of vapor leakage in the system, including, but not limited to pumps, valves, and sampling connections, quarterly during the loading of a storage tank using the methods and procedures described in the rule requirements selected for the work practice standard for equipment leak components as specified in Table 4 to this subpart, item 4. An instrument reading of 500 ppmv defines a leak. Repair of leaks is performed according to the repair requirements specified in your selected equipment leak standards. For pressure relief devices, comply with § 63.2346(a)(4)(v). If no loading of a storage tank occurs during a quarter, then monitoring of the vapor balancing system is not required

[85 FR 40784, July 7, 2020]

TABLE 11 TO SUBPART EEEE OF PART 63—REQUIREMENTS FOR REPORTS

As stated in § 63.2386(a), (b), and (f), you must submit compliance reports and startup, shutdown, and malfunction reports according to the following table:

sfrattini on LAPJZKW1R2 with $$_JOB
VerDate Sep<11>2014 09:16 Apr 04, 2023 Jkt 256165 PO 00000 Frm 00427 Fmt 8010 Sfmt 8026 Q:\40\256165.XXX PC31

You must submit a(n) . . .	The report must contain . . .	You must submit the report . . .
1. Compliance report or Periodic Report ..	a. The information specified in § 63.2386(c), (d), (e). If you had a SSM during the reporting period and you took actions consistent with your SSM plan, the report must also include the information in § 63.10(d)(5)(i) except as specified in item 1.e of this table; AND.	Semiannually, and it must be postmarked or electronically submitted by January 31 or July 31, in accordance with § 63.2386(b).
	b. The information required by 40 CFR part 63, subpart TT, UU, or H, as applicable, for pumps, valves, and sampling connections; AND.	See the submission requirement in item 1.a of this table.
	c. The information required by § 63.999(c); AND.	See the submission requirement in item 1.a of this table.
	d. The information specified in § 63.1066(b) including: Notification of inspection, inspection results, requests for alternate devices, and requests for extensions, as applicable.	See the submission requirement in item 1.a of this table.
	e. Beginning no later than the compliance dates specified in § 63.2342(e), the requirement to include the information in § 63.10(d)(5)(i) no longer applies..	
2. Immediate SSM report if you had a SSM that resulted in an applicable emission standard in the relevant standard being exceeded, and you took an action that was not consistent with your SSM plan.	a. The information required in § 63.10(d)(5)(ii).	i. Except as specified in item 2.a.ii of this table, by letter within 7 working days after the end of the event unless you have made alternative arrangements with the permitting authority (§ 63.10(d)(5)(ii)). ii. Beginning no later than the compliance dates specified in § 63.2342(e), item 2.a.i of this table no longer applies.

[85 FR 40786, July 7, 2020]

Table 12 to Subpart EEEE of Part 63—Applicability of General Provisions to Subpart EEEE

As stated in §§ 63.2382 and 63.2398, you must comply with the applicable General Provisions requirements as follows:

Citation	Subject	Brief description	Applies to subpart EEEE
§ 63.1	Applicability	Initial applicability determination; Applicability after standard established; Permit requirements; Extensions, Notifications.	Yes.
§ 63.2	Definitions	Definitions for part 63 standards	Yes.
§ 63.3	Units and Abbreviations	Units and abbreviations for part 63 standards	Yes.
§ 63.4	Prohibited Activities and Circumvention.	Prohibited activities; Circumvention, Severability	Yes.
§ 63.5	Construction/Reconstruction.	Applicability; Applications; Approvals	Yes.
§ 63.6(a)	Compliance with Standards/O&M Applicability.	GP apply unless compliance extension; GP apply to area sources that become major.	Yes.
§ 63.6(b)(1)–(4)	Compliance Dates for New and Reconstructed Sources.	Standards apply at effective date; 3 years after effective date; upon startup; 10 years after construction or reconstruction commences for CAA section 112(f).	Yes.
§ 63.6(b)(5)	Notification	Must notify if commenced construction or reconstruction after proposal.	Yes.
§ 63.6(b)(6)	[Reserved].		
§ 63.6(b)(7)	Compliance Dates for New and Reconstructed Area Sources That Become Major.	Area sources that become major must comply with major source standards immediately upon becoming major, regardless of whether required to comply when they were an area source.	Yes.

sfrattini on LAPJZKW1R2 with $$_JOB
VerDate Sep<11>2014 09:16 Apr 04, 2023 Jkt 256165 PO 00000 Frm 00428 Fmt 8010 Sfmt 8002 Q:\40\256165.XXX PC31

Citation	Subject	Brief description	Applies to subpart EEEE
§ 63.6(c)(1)–(2)	Compliance Dates for Existing Sources.	Comply according to date in this subpart, which must be no later than 3 years after effective date; for section 112(f) standards, comply within 90 days of effective date unless compliance extension.	Yes.
§ 63.6(c)(3)–(4)	[Reserved].		
§ 63.6(c)(5)	Compliance Dates for Existing Area Sources That Become Major.	Area sources that become major must comply with major source standards by date indicated in this subpart or by equivalent time period (*e.g.,* 3 years).	Yes.
§ 63.6(d)	[Reserved].		
§ 63.6(e)(1)(i)	Operation and Maintenance.	Operate to minimize emissions at all times	Yes, before July 7, 2023. No, beginning on and after July 7, 2023. See § 63.2350(d) for general duty requirement.
§ 63.6(e)(1)(ii)	Operation and Maintenance.	Correct malfunctions as soon as practicable	Yes, before July 7, 2023. No, beginning on and after July 7, 2023.
§ 63.6(e)(1)(iii)	Operation and Maintenance.	Operation and maintenance requirements independently enforceable; information Administrator will use to determine if operation and maintenance requirements were met.	Yes.
§ 63.6(e)(2)	[Reserved].		
§ 63.6(e)(3)	SSM Plan	Requirement for SSM plan; content of SSM plan; actions during SSM.	Yes, before July 7, 2023; however, (1) the 2-day reporting requirement in paragraph § 63.6(e)(3)(iv) does not apply and (2) § 63.6(e)(3) does not apply to emissions sources not requiring control. No, beginning on and after July 7, 2023.
§ 63.6(f)(1)	Compliance Except During SSM.	You must comply with emission standards at all times except during SSM.	Yes, before July 7, 2023. No, beginning on and after July 7, 2023.
§ 63.6(f)(2)–(3)	Methods for Determining Compliance.	Compliance based on performance test, operation and maintenance plans, records, inspection.	Yes.
§ 63.6(g)(1)–(3)	Alternative Standard	Procedures for getting an alternative standard	Yes.
§ 63.6(h)(1)	Opacity/Visible Emission Standards.	You must comply with opacity and visible emission standards at all times except during SSM.	Yes, before July 7, 2023. No, beginning on and after July 7, 2023.
§ 63.6(h)(2)–(9)	Opacity/Visible Emission Standards.	Requirements for compliance with opacity and visible emission standards.	No; except as it applies to flares for which Method 22 observations are required as part of a flare compliance assessment.
§ 63.6(i)(1)–(14)	Compliance Extension	Procedures and criteria for Administrator to grant compliance extension.	Yes.
§ 63.6(j)	Presidential Compliance Exemption.	President may exempt any source from requirement to comply with this subpart.	Yes.
§ 63.7(a)(2)	Performance Test Dates.	Dates for conducting initial performance testing; must conduct 180 days after compliance date.	Yes.
§ 63.7(a)(3)	Section 114 Authority	Administrator may require a performance test under CAA section 114 at any time.	Yes.
§ 63.7(b)(1)	Notification of Performance Test.	Must notify Administrator 60 days before the test.	Yes.
§ 63.7(b)(2)	Notification of Rescheduling.	If you have to reschedule performance test, must notify Administrator of rescheduled date as soon as practicable and without delay.	Yes.

sfrattini on LAPJZKW1R2 with $$_JOB
VerDate Sep<11>2014 09:16 Apr 04, 2023 Jkt 256165 PO 00000 Frm 00429 Fmt 8010 Sfmt 8002 Q:\40\256165.XXX PC31

Citation	Subject	Brief description	Applies to subpart EEEE
§ 63.7(c)	Quality Assurance (QA)/ Test Plan.	Requirement to submit site-specific test plan 60 days before the test or on date Administrator agrees with; test plan approval procedures; performance audit requirements; internal and external QA procedures for testing.	Yes.
§ 63.7(d)	Testing Facilities	Requirements for testing facilities	Yes.
§ 63.7(e)(1)	Conditions for Conducting Performance Tests.	Performance tests must be conducted under representative conditions; cannot conduct performance tests during SSM.	Yes, before July 7, 2023. No, beginning on and after July 7, 2023. See § 63.2354(b)(6).
§ 63.7(e)(2)	Conditions for Conducting Performance Tests.	Must conduct according to this subpart and EPA test methods unless Administrator approves alternative.	Yes.
§ 63.7(e)(3)	Test Run Duration	Must have three test runs of at least 1 hour each; compliance is based on arithmetic mean of three runs; conditions when data from an additional test run can be used.	Yes; however, for transfer racks per §§ 63.987(b)(3)(i)(A)–(B) and 63.997(e)(1)(v)(A)–(B) provide exceptions to the requirement for test runs to be at least 1 hour each.
§ 63.7(e)(4)	Authority to Require Testing.	Administrator has authority to require testing under CAA section 114 regardless of § 63.7 (e)(1)–(3).	Yes.
§ 63.7(f)	Alternative Test Method	Procedures by which Administrator can grant approval to use an intermediate or major change, or alternative to a test method.	Yes.
§ 63.7(g)	Performance Test Data Analysis.	Must include raw data in performance test report; must submit performance test data 60 days after end of test with the Notification of Compliance Status; keep data for 5 years.	Yes, except this subpart specifies how and when the performance test and performance evaluation results are reported.
§ 63.7(h)	Waiver of Tests	Procedures for Administrator to waive performance test.	Yes.
§ 63.8(a)(1)	Applicability of Monitoring Requirements.	Subject to all monitoring requirements in standard.	Yes.
§ 63.8(a)(2)	Performance Specifications.	Performance Specifications in appendix B of 40 CFR part 60 apply.	Yes.
§ 63.8(a)(3)	[Reserved].		
§ 63.8(a)(4)	Monitoring of Flares	Monitoring requirements for flares in § 63.11	Yes, before July 7, 2023; however, flare monitoring requirements in § 63.987(c) also apply before July 7, 2023. No, beginning on and after July 7, 2023. See § 63.2380.
§ 63.8(b)(1)	Monitoring	Must conduct monitoring according to standard unless Administrator approves alternative.	Yes.
§ 63.8(b)(2)–(3)	Multiple Effluents and Multiple Monitoring Systems.	Specific requirements for installing monitoring systems; must install on each affected source or after combined with another affected source before it is released to the atmosphere provided the monitoring is sufficient to demonstrate compliance with the standard; if more than one monitoring system on an emission point, must report all monitoring system results, unless one monitoring system is a backup.	Yes.
§ 63.8(c)(1)	Monitoring System Operation and Maintenance.	Maintain monitoring system in a manner consistent with good air pollution control practices.	Yes.
§ 63.8(c)(1)(i)	Routine and Predictable SSM.	Keep parts for routine repairs readily available; reporting requirements for SSM when action is described in SSM plan.	Yes, before July 7, 2023. No, beginning on and after July 7, 2023.
§ 63.8(c)(1)(ii)	CMS malfunction not in SSM plan.	Keep the necessary parts for routine repairs if CMS malfunctions.	Yes.

sfrattini on LAPJZKW1R2 with $$_JOB
VerDate Sep<11>2014 09:16 Apr 04, 2023 Jkt 256165 PO 00000 Frm 00430 Fmt 8010 Sfmt 8002 Q:\40\256165.XXX PC31

Citation	Subject	Brief description	Applies to subpart EEEE
§ 63.8(c)(1)(iii)	Compliance with Operation and Maintenance Requirements.	Develop a written SSM plan for CMS	Yes, before July 7, 2023. No, beginning on and after July 7, 2023.
§ 63.8(c)(2)–(3)	Monitoring System Installation.	Must install to get representative emission or parameter measurements; must verify operational status before or at performance test.	Yes.
§ 63.8(c)(4)	CMS Requirements	CMS must be operating except during breakdown, out-of-control, repair, maintenance, and high-level calibration drifts; COMS must have a minimum of one cycle of sampling and analysis for each successive 10-second period and one cycle of data recording for each successive 6-minute period; CEMS must have a minimum of one cycle of operation for each successive 15-minute period.	Yes; however, COMS are not applicable.
§ 63.8(c)(5)	COMS Minimum Procedures.	COMS minimum procedures	No.
§ 63.8(c)(6)–(8)	CMS Requirements	Zero and high level calibration check requirements. Out-of-control periods.	Yes, but only applies for CEMS. Subpart SS of this part provides requirements for CPMS.
§ 63.8(d)(1)–(2)	CMS Quality Control	Requirements for CMS quality control	Yes, but only applies for CEMS. Subpart SS of this part provides requirements for CPMS.
§ 63.8(d)(3)	CMS Quality Control	Must keep quality control plan on record for 5 years; keep old versions.	Yes, before July 7, 2023, but only applies for CEMS. Subpart SS of this part provides requirements for CPMS. No, beginning on and after July 7, 2023. See § 63.2366(c).
§ 63.8(e)	CMS Performance Evaluation.	Notification, performance evaluation test plan, reports.	Yes, but only applies for CEMS, except this subpart specifies how and when the performance evaluation results are reported.
§ 63.8(f)(1)–(5)	Alternative Monitoring Method.	Procedures for Administrator to approve alternative monitoring.	Yes, but subpart SS of this part also provides procedures for approval of CPMS.
§ 63.8(f)(6)	Alternative to Relative Accuracy Test.	Procedures for Administrator to approve alternative relative accuracy tests for CEMS.	Yes.
§ 63.8(g)	Data Reduction	COMS 6-minute averages calculated over at least 36 evenly spaced data points; CEMS 1 hour averages computed over at least four equally spaced data points; data that cannot be used in average.	Yes; however, COMS are not applicable.
§ 63.9(a)	Notification Requirements.	Applicability and State delegation	Yes.
§ 63.9(b)(1)–(2), (4)–(5)	Initial Notifications	Submit notification within 120 days after effective date; notification of intent to construct/reconstruct, notification of commencement of construction/reconstruction, notification of startup; contents of each.	Yes.
§ 63.9(c)	Request for Compliance Extension.	Can request if cannot comply by date or if installed best available control technology or lowest achievable emission rate (BACT/LAER).	Yes.
§ 63.9(d)	Notification of Special Compliance Requirements for New Sources.	For sources that commence construction between proposal and promulgation and want to comply 3 years after effective date.	Yes.
§ 63.9(e)	Notification of Performance Test.	Notify Administrator 60 days prior	Yes.
§ 63.9(f)	Notification of VE/Opacity Test.	Notify Administrator 30 days prior	No.

sfrattini on LAPJZKW1R2 with $$_JOB
VerDate Sep<11>2014 09:16 Apr 04, 2023 Jkt 256165 PO 00000 Frm 00431 Fmt 8010 Sfmt 8002 Q:\40\256165.XXX PC31

Citation	Subject	Brief description	Applies to subpart EEEE
§ 63.9(g)	Additional Notifications When Using CMS.	Notification of performance evaluation; notification about use of COMS data; notification that exceeded criterion for relative accuracy alternative.	Yes; however, there are no opacity standards.
§ 63.9(h)(1)–(6)	Notification of Compliance Status.	Contents due 60 days after end of performance test or other compliance demonstration, except for opacity/visible emissions, which are due 30 days after; when to submit to federal vs. state authority.	Yes; however, (1) there are no opacity standards and (2) all initial Notification of Compliance Status, including all performance test data, are to be submitted at the same time, either within 240 days after the compliance date or within 60 days after the last performance test demonstrating compliance has been completed, whichever occurs first.
§ 63.9(i)	Adjustment of Submittal Deadlines.	Procedures for Administrator to approve change in when notifications must be submitted.	Yes.
§ 63.9(j)	Change in Previous Information.	Must submit within 15 days after the change	Yes for change to major source status, other changes are reported in the first and subsequent compliance reports.
§ 63.9(k)	Electronic reporting procedures.	Procedure to report electronically for notification in § 63.9(j).	Yes, only as specified in § 63.9(j).
§ 63.10(a)	Recordkeeping/Reporting.	Applies to all, unless compliance extension; when to submit to federal vs. state authority; procedures for owners of more than one source.	Yes.
§ 63.10(b)(1)	Recordkeeping/Reporting.	General requirements; keep all records readily available; keep for 5 years.	Yes.
§ 63.10(b)(2)(i)	Records Related to Startup and Shutdown.	Occurrence of each for operations (process equipment).	Yes, July 7, 2023. No, beginning on and after July 7, 2023.
§ 63.10(b)(2)(ii)	Recordkeeping Relevant to Malfunction Periods and CMS.	Occurrence of each malfunction of air pollution equipment.	Yes, before July 7, 2023. No, beginning on and after July 7, 2023. See § 63.2390(f).
§ 63.10(b)(2)(iii)	Recordkeeping Relevant to Maintenance of Air Pollution Control and Monitoring Equipment.	Maintenance on air pollution control equipment	Yes.
§ 63.10(b)(2)(iv)	Recordkeeping Relevant to SSM Periods and CMS.	Actions during SSM	Yes, before July 7, 2023. No, beginning on and after July 7, 2023.
§ 63.10(b)(2)(v)	Recordkeeping Relevant to SSM Periods and CMS.	Actions during SSM	No.
§ 63.10(b)(2)(vi)–(xi)	CMS Records	Malfunctions, inoperative, out-of-control periods	Yes.
§ 63.10(b)(2)(xii)	Records	Records when under waiver	Yes.
§ 63.10(b)(2)(xiii)	Records	Records when using alternative to relative accuracy test.	Yes.
§ 63.10(b)(2)(xiv)	Records	All documentation supporting initial notification and notification of compliance status.	Yes.
§ 63.10(b)(3)	Records	Applicability determinations	Yes.
§ 63.10(c)(1)–(14)	Records	Additional records for CMS	Yes.
§ 63.10(c)(15)	Records	Additional records for CMS	Yes, before July 7, 2023. No, beginning on and after July 7, 2023.
§ 63.10(d)(1)	General Reporting Requirements.	Requirement to report	Yes.

sfrattini on LAPJZKW1R2 with $$_JOB
VerDate Sep<11>2014 09:16 Apr 04, 2023 Jkt 256165 PO 00000 Frm 00432 Fmt 8010 Sfmt 8002 Q:\40\256165.XXX PC31

Citation	Subject	Brief description	Applies to subpart EEEE
§ 63.10(d)(2)	Report of Performance Test Results.	When to submit to federal or state authority	No. This subpart specifies how and when the performance test results are reported.
§ 63.10(d)(3)	Reporting Opacity or Visible Emissions Observations.	What to report and when	Yes.
§ 63.10(d)(4)	Progress Reports	Must submit progress reports on schedule if under compliance extension.	Yes.
§ 63.10(d)(5)	SSM Reports	Contents and submission	Yes, before July 7, 2023. No, beginning on and after July 7, 2023. See § 63.2386(d)(1)(xiii).
§ 63.10(e)(1)–(2)	Additional CMS Reports	Must report results for each CEMS on a unit; written copy of CMS performance evaluation; two-three copies of COMS performance evaluation.	Yes, except this subpart specifies how and when the performance evaluation results are reported; however, COMS are not applicable.
§ 63.10(e)(3)(i)–(iii)	Reports	Schedule for reporting excess emissions and parameter monitor exceedance (now defined as deviations).	Yes; however, note that the title of the report is the compliance report; deviations include excess emissions and parameter exceedances.
§ 63.10(e)(3)(iv)–(v)	Excess Emissions Reports.	Requirement to revert to quarterly submission if there is an excess emissions or parameter monitoring exceedance (now defined as deviations); provision to request semiannual reporting after compliance for 1 year; submit report by 30th day following end of quarter or calendar half; if there has not been an exceedance or excess emissions (now defined as deviations), report contents in a statement that there have been no deviations; must submit report containing all of the information in §§ 63.8(c)(7)–(8) and 63.10(c)(5)–(13).	Yes.
§ 63.10(e)(3)(vi)–(viii)	Excess Emissions Report and Summary Report.	Requirements for reporting excess emissions for CMS (now called deviations); requires all of the information in §§ 63.10(c)(5)–(13) and 63.8(c)(7)–(8).	No. This subpart specifies the reported information for deviations within the compliance reports.
§ 63.10(e)(4)	Reporting COMS Data	Must submit COMS data with performance test data.	No.
§ 63.10(f)	Waiver for Recordkeeping/Reporting.	Procedures for Administrator to waive	Yes.
§ 63.11(b)	Flares	Requirements for flares	Yes, before July 7, 2023; § 63.987 requirements apply, and the section references § 63.11(b). No, beginning on and after July 7, 2023. See § 63.2380.
§ 63.11(c), (d), and (e)	Control and work practice requirements.	Alternative work practice for equipment leaks	Yes.
§ 63.12	Delegation	State authority to enforce standards	Yes.
§ 63.13	Addresses	Addresses where reports, notifications, and requests are sent.	Yes.
§ 63.14	Incorporation by Reference.	Test methods incorporated by reference	Yes.
§ 63.15	Availability of Information.	Public and confidential information	Yes.

[85 FR 40786, July 7, 2020, as amended at 85 FR 73903, Nov. 19, 2020]

sfrattini on LAPJZKW1R2 with $$_JOB
VerDate Sep<11>2014 09:16 Apr 04, 2023 Jkt 256165 PO 00000 Frm 00433 Fmt 8010 Sfmt 8026 Q:\40\256165.XXX PC31

Subpart FFFF—National Emission Standards for Hazardous Air Pollutants: Miscellaneous Organic Chemical Manufacturing

SOURCE: 68 FR 63888, Nov. 10, 2003, unless otherwise noted.

WHAT THIS SUBPART COVERS

§ 63.2430 What is the purpose of this subpart?

This subpart establishes national emission standards for hazardous air pollutants (NESHAP) for miscellaneous organic chemical manufacturing. This subpart also establishes requirements to demonstrate initial and continuous compliance with the emission limits, operating limits, and work practice standards.

§ 63.2435 Am I subject to the requirements in this subpart?

(a) You are subject to the requirements in this subpart if you own or operate miscellaneous organic chemical manufacturing process units (MCPU) that are located at, or are part of, a major source of hazardous air pollutants (HAP) emissions as defined in section 112(a) of the Clean Air Act (CAA).

(b) An MCPU includes equipment necessary to operate a miscellaneous organic chemical manufacturing process, as defined in § 63.2550, that satisfies all of the conditions specified in paragraphs (b)(1) through (3) of this section. An MCPU also includes any assigned storage tanks and transfer racks; equipment in open systems that is used to convey or store water having the same concentration and flow characteristics as wastewater; and components such as pumps, compressors, agitators, pressure relief devices, sampling connection systems, open-ended valves or lines, valves, connectors, and instrumentation systems that are used to manufacture any material or family of materials described in paragraphs (b)(1)(i) through (v) of this section.

(1) The MCPU produces material or family of materials that is described in paragraph (b)(1)(i), (ii), (iii), (iv), or (v) of this section.

(i) An organic chemical(s) classified using the 1987 version of SIC code 282, 283, 284, 285, 286, 287, 289, or 386, except as provided in paragraph (c)(5) of this section.

(ii) An organic chemical(s) classified using the 1997 version of NAICS code 325, except as provided in paragraph (c)(5) of this section.

(iii) Quaternary ammonium compounds and ammonium sulfate produced with caprolactam.

(iv) Hydrazine.

(v) Organic solvents classified in any of the SIC or NAICS codes listed in paragraph (b)(1)(i) or (ii) of this section that are recovered using nondedicated solvent recovery operations.

(2) The MCPU processes, uses, or generates any of the organic HAP listed in section 112(b) of the CAA or hydrogen halide and halogen HAP, as defined in § 63.2550.

(3) The MCPU is not an affected source or part of an affected source under another subpart of this part 63, except for process vents from batch operations within a chemical manufacturing process unit (CMPU), as identified in § 63.100(j)(4). For this situation, the MCPU is the same as the CMPU as defined in § 63.100, and you are subject only to the requirements for batch process vents in this subpart.

(c) The requirements in this subpart do not apply to the operations specified in paragraphs (c)(1) through (7) of this section.

(1) Research and development facilities, as defined in section 112(c)(7) of the CAA.

(2) The manufacture of ammonium sulfate as a by-product, if the slurry entering the by-product manufacturing process contains 50 parts per million by weight (ppmw) HAP or less or 10 ppmw benzene or less. You must retain information, data, and analysis to document the HAP concentration in the entering slurry in order to claim this exemption.

(3) The affiliated operations located at an affected source under subparts GG (National Emission Standards for Aerospace Manufacturing and Rework Facilities), KK (National Emission Standards for the Printing and Publishing Industry), JJJJ (NESHAP: Paper and Other Web Coating), MMMM (NESHAP: Surface Coating of Miscellaneous Metal Parts and Products), and

sfrattini on LAPJZKW1R2 with $$_JOB
VerDate Sep<11>2014 09:16 Apr 04, 2023 Jkt 256165 PO 00000 Frm 00434 Fmt 8010 Sfmt 8010 Q:\40\256165.XXX PC31

SSSS (NESHAP: Surface Coating of Metal Coil) of this part. Affiliated operations include, but are not limited to, mixing or dissolving of coating ingredients; coating mixing for viscosity adjustment, color tint or additive blending, or pH adjustment; cleaning of coating lines and coating line parts; handling and storage of coatings and solvent; and conveyance and treatment of wastewater.

(4) Fabricating operations (such as spinning or compressing a solid polymer into its end use); compounding operations (in which blending, melting, and resolidification of a solid polymer product occur for the purpose of incorporating additives, colorants, or stabilizers); and extrusion and drawing operations (converting an already produced solid polymer into a different shape by melting or mixing the polymer and then forcing it or pulling it through an orifice to create an extruded product). An operation is not exempt if it involves processing with HAP solvent or if an intended purpose of the operation is to remove residual HAP monomer.

(5) Production activities described using the 1997 version of NAICS codes 325131, 325181, 325188 (except the requirements do apply to hydrazine), 325314, 325991 (except the requirements do apply to reformulating plastics resins from recycled plastics products), and 325992 (except the requirements do apply to photographic chemicals).

(6) Tall oil recovery systems.

(7) Carbon monoxide production.

(d) If the predominant use of a transfer rack loading arm or storage tank (including storage tanks in series) is associated with a miscellaneous organic chemical manufacturing process, and the loading arm or storage tank is not part of an affected source under a subpart of this part 63, then you must assign the loading arm or storage tank to the MCPU for that miscellaneous organic chemical manufacturing process. If the predominant use cannot be determined, then you may assign the loading arm or storage tank to any MCPU that shares it and is subject to this subpart. If the use varies from year to year, then you must base the determination on the utilization that occurred during the year preceding November 10, 2003 or, if the loading arm or storage tank was not in operation during that year, you must base the use on the expected use for the first 5-year period after startup. You must include the determination in the notification of compliance status report specified in §63.2520(d). You must redetermine the primary use at least once every 5 years, or any time you implement emissions averaging or pollution prevention after the compliance date.

(e) For nondedicated equipment used to create at least one MCPU, you may elect to develop process unit groups (PUG), determine the primary product of each PUG, and comply with the requirements of the subpart in 40 CFR part 63 that applies to that primary product as specified in §63.2535(l).

[68 FR 63888, Nov. 10, 2003, as amended at 71 FR 40331, July 14, 2006; 85 FR 49132, Aug. 12, 2020]

§63.2440 What parts of my plant does this subpart cover?

(a) This subpart applies to each miscellaneous organic chemical manufacturing affected source.

(b) The miscellaneous organic chemical manufacturing affected source is the facilitywide collection of MCPU and heat exchange systems, wastewater, and waste management units that are associated with manufacturing materials described in §63.2435(b)(1).

(c) A new affected source is described by either paragraph (c)(1) or (2) of this section.

(1) Each affected source defined in paragraph (b) of this section for which you commenced construction or reconstruction after April 4, 2002, and you meet the applicability criteria at the time you commenced construction or reconstruction.

(2) Each dedicated MCPU that has the potential to emit 10 tons per year (tpy) of any one HAP or 25 tpy of combined HAP, and you commenced construction or reconstruction of the MCPU after April 4, 2002. For the purposes of this paragraph, an MCPU is an affected source in the definition of the term ''reconstruction'' in §63.2.

(d) An MCPU that is also a CMPU under §63.100 is reconstructed for the purposes of this subpart if, and only if,

sfrattini on LAPJZKW1R2 with $$_JOB
VerDate Sep<11>2014 09:16 Apr 04, 2023 Jkt 256165 PO 00000 Frm 00435 Fmt 8010 Sfmt 8010 Q:\40\256165.XXX PC31

the CMPU meets the requirements for reconstruction in § 63.100(l)(2).

COMPLIANCE DATES

§ 63.2445 When do I have to comply with this subpart?

(a) Except as specified in paragraphs (g) through (i) of this section, if you have a new affected source, you must comply with this subpart according to the requirements in paragraphs (a)(1) and (2) of this section.

(1) If you startup your new affected source before November 10, 2003, then you must comply with the requirements for new sources in this subpart no later than November 10, 2003.

(2) If you startup your new affected source after November 10, 2003, then you must comply with the requirements for new sources in this subpart upon startup of your affected source.

(b) Except as specified in paragraphs (g) through (i) of this section, if you have an existing source on November 10, 2003, you must comply with the requirements for existing sources in this subpart no later than May 10, 2008.

(c) You must meet the notification requirements in § 63.2515 according to the dates specified in that section and in subpart A of this part 63. Some of the notifications must be submitted before you are required to comply with the emission limits, operating limits, and work practice standards in this subpart.

(d) If you have a Group 2 emission point that becomes a Group 1 emission point after the compliance date for your affected source, you must comply with the Group 1 requirements beginning on the date the switch occurs. An initial compliance demonstration as specified in this subpart must be conducted within 150 days after the switch occurs.

(e) If, after the compliance date for your affected source, hydrogen halide and halogen HAP emissions from process vents in a process increase to more than 1,000 lb/yr, or HAP metals emissions from a process at a new affected source increase to more than 150 lb/yr, you must comply with the applicable emission limits specified in Table 3 to this subpart and the associated compliance requirements beginning on the date the emissions exceed the applicable threshold. An initial compliance demonstration as specified in this subpart must be conducted within 150 days after the switch occurs.

(f) If you have a small control device for process vent or transfer rack emissions that becomes a large control device, as defined in § 63.2550(i), you must comply with monitoring and associated recordkeeping and reporting requirements for large control devices beginning on the date the switch occurs. An initial compliance demonstration as specified in this subpart must be conducted within 150 days after the switch occurs.

(g) All affected sources that commenced construction or reconstruction on or before December 17, 2019, must be in compliance with the requirements listed in paragraphs (g)(1) through (7) of this section upon initial startup or on August 12, 2023, whichever is later. All affected sources that commenced construction or reconstruction after December 17, 2019, must be in compliance with the requirements listed in paragraphs (g)(1) through (7) of this section upon initial startup, or on August 12, 2020 whichever is later.

(1) The general requirements specified in §§ 63.2450(a)(2), (e)(4) through (7), (g)(6) and (7), (i)(3), (j)(5)(ii), (j)(6), (k)(1)(ii), (k)(7) and (8), (t), and (u), 63.2520(d)(3) and (e)(11) through (13), 63.2525(m) through (o), and 63.2535(m).

(2) For process vents, the requirements specified in §§ 63.2450(v), 63.2520(e)(14), and 63.2525(p).

(3) For storage tank degassing, the requirements specified in § 63.2470(f).

(4) For equipment leaks and pressure relief devices, the requirements specified in §§ 63.2480(e) and (f), 63.2520(d)(4) and (e)(14), and 63.2525(q).

(5) For wastewater streams and liquid streams in open systems within an MCPU, the requirements specified in § 63.2485(i)(2)(iii), (n)(2)(vii), (p), and (q).

(6) For heat exchange systems, the requirements specified in §§ 63.2490(d), 63.2520(e)(16), and 63.2525(r).

(7) The other notification, reports, and records requirements specified in §§ 63.2500(g), 63.2520(e)(5)(ii)(D) and (e)(5)(iii)(M) and (N), and 63.2525(l) and (u).

sfrattini on LAPJZKW1R2 with $$_JOB
VerDate Sep<11>2014 09:16 Apr 04, 2023 Jkt 256165 PO 00000 Frm 00436 Fmt 8010 Sfmt 8010 Q:\40\256165.XXX PC31

(h) All affected sources that commenced construction or reconstruction on or before December 17, 2019, must be in compliance with the requirements for pumps in light liquid service in § 63.2480(b)(6) and (c)(10) upon initial startup or on August 12, 2021, whichever is later. All affected sources that commenced construction or reconstruction after December 17, 2019, must be in compliance with the requirements for pumps in light liquid service in § 63.2480(b)(6) and (c)(10) upon initial startup, or on August 12, 2020, whichever is later.

(i) All affected sources that commenced construction or reconstruction on or before December 17, 2019, must be in compliance with the ethylene oxide requirements in §§ 63.2450(h) and (r), 63.2470(b) and (c)(4), 63.2492, 63.2493, 63.2520(d)(5) and (e)(17), and 63.2525(s) and Table 1 to this subpart, item 5, Table 2 to this subpart, item 3, Table 4 to this subpart, item 3, and Table 6 to this subpart, item 3, upon initial startup or on August 12, 2022, whichever is later. All affected sources that commenced construction or reconstruction after December 17, 2019, must be in compliance with the ethylene oxide requirements listed in §§ 63.2450(h) and (r), 63.2470(b) and (c)(4), 63.2492, 63.2493, 63.2520(d)(5) and (e)(17), and 63.2525(s) and Table 1 to this subpart, item 5, Table 2 to this subpart, item 3, Table 4 to this subpart, item 3, and Table 6 to this subpart, item 3, upon initial startup, or on August 12, 2020, whichever is later.

[68 FR 63888, Nov. 10, 2003, as amended at 71 FR 10442, Mar. 1, 2006; 71 FR 40332, July 14, 2006; 85 FR 49132, Aug. 12, 2020]

EMISSION LIMITS, WORK PRACTICE STANDARDS, AND COMPLIANCE REQUIREMENTS

§ 63.2450 What are my general requirements for complying with this subpart?

(a) *General*. You must comply with paragraphs (a)(1) and (2) of this section.

(1) Except as specified in paragraph (a)(2) of this section, you must be in compliance with the emission limits and work practice standards in Tables 1 through 7 to this subpart at all times, except during periods of startup, shutdown, and malfunction (SSM), and you must meet the requirements specified in §§ 63.2455 through 63.2490 (or the alternative means of compliance in § 63.2495, § 63.2500, or § 63.2505), except as specified in paragraphs (b) through (s) of this section. You must meet the notification, reporting, and recordkeeping requirements specified in §§ 63.2515, 63.2520, and 63.2525.

(2) Beginning no later than the compliance dates specified in § 63.2445(g), paragraph (a)(1) of this section no longer applies. Instead, you must be in compliance with the emission limits and work practice standards in Tables 1 through 7 to this subpart at all times, and you must meet the requirements specified in §§ 63.2455 through 63.2490 (or the alternative means of compliance in § 63.2495, § 63.2500, or § 63.2505), except as specified in paragraphs (b) through (v) of this section. You must meet the notification, reporting, and recordkeeping requirements specified in §§ 63.2515, 63.2520, and 63.2525.

(b) *Determine halogenated vent streams*. You must determine if an emission stream is a halogenated vent stream, as defined in § 63.2550, by calculating the mass emission rate of halogen atoms in accordance with § 63.115(d)(2)(v). Alternatively, you may elect to designate the emission stream as halogenated.

(c) *Requirements for combined emission streams*. When organic HAP emissions from different emission types (*e.g.*, continuous process vents, batch process vents, storage tanks, transfer operations, and waste management units) are combined, you must comply with the requirements of either paragraph (c)(1) or (2) of this section.

(1) Comply with the applicable requirements of this subpart for each kind of organic HAP emissions in the stream (*e.g.*, the requirements of table 1 to this subpart for continuous process vents and the requirements of table 4 to this subpart for emissions from storage tanks).

(2) Determine the applicable requirements based on the hierarchy presented in paragraphs (c)(2)(i) through (vi) of this section. For a combined stream, the applicable requirements are specified in the highest-listed paragraph in the hierarchy that applies to

sfrattini on LAPJZKW1R2 with $$_JOB
VerDate Sep<11>2014 09:16 Apr 04, 2023 Jkt 256165 PO 00000 Frm 00437 Fmt 8010 Sfmt 8010 Q:\40\256165.XXX PC31

any of the individual streams that make up the combined stream. For example, if a combined stream consists of emissions from Group 1 batch process vents and any other type of emission stream, then you must comply with the requirements in paragraph (c)(2)(i) of this section for the combined stream; compliance with the requirements in paragraph (c)(2)(i) of this section constitutes compliance for the other emission streams in the combined stream. Two exceptions are that you must comply with the requirements in Table 3 to this subpart and § 63.2465 for all process vents with hydrogen halide and halogen HAP emissions, and recordkeeping requirements for Group 2 applicability or compliance are still required (*e.g.*, the requirement in § 63.2525(e)(3) and (4) to track the number of batches produced and calculate rolling annual emissions for processes with Group 2 batch process vents).

(i) The requirements of table 2 to this subpart and § 63.2460 for Group 1 batch process vents, including applicable monitoring, recordkeeping, and reporting.

(ii) The requirements of table 1 to this subpart and § 63.2455 for continuous process vents that are routed to a control device, as defined in § 63.981, including applicable monitoring, recordkeeping, and reporting.

(iii) The requirements of table 5 to this subpart and § 63.2475 for transfer operations, including applicable monitoring, recordkeeping, and reporting.

(iv) The requirements of table 7 to this subpart and § 63.2485 for emissions from waste management units that are used to manage and treat Group 1 wastewater streams and residuals from Group 1 wastewater streams, including applicable monitoring, recordkeeping, and reporting.

(v) The requirements of table 4 to this subpart and § 63.2470 for control of emissions from storage tanks, including applicable monitoring, recordkeeping, and reporting.

(vi) The requirements of table 1 to this subpart and § 63.2455 for continuous process vents after a recovery device including applicable monitoring, recordkeeping, and reporting.

(d) [Reserved]

(e) *Requirements for control devices.* (1) Except when complying with § 63.2485, if you reduce organic HAP emissions by venting emissions through a closed-vent system to any combination of control devices (except a flare) or recovery devices, you must meet the requirements of paragraph (e)(4) of this section, and the requirements of § 63.982(c) and the requirements referenced therein.

(2) Except as specified in paragraph (e)(5) of this section or except when complying with § 63.2485, if you reduce organic HAP emissions by venting emissions through a closed-vent system to a flare, you must meet the requirements of paragraph (e)(4) of this section, and the requirements of § 63.982(b) and the requirements referenced therein.

(3) Except as specified in paragraphs (e)(3)(i) and (ii) of this section, if you use a halogen reduction device to reduce hydrogen halide and halogen HAP emissions from halogenated vent streams, you must meet the requirements of paragraph (e)(4) of this section, and the requirements of § 63.994 and the requirements referenced therein. If you use a halogen reduction device before a combustion device, you must determine the halogen atom emission rate prior to the combustion device according to the procedures in § 63.115(d)(2)(v).

(i) Beginning on and after October 13, 2020, performance test reports must be submitted according to the procedures in § 63.2520(f).

(ii) If you use a halogen reduction device other than a scrubber, then you must submit procedures for establishing monitoring parameters to the Administrator as part of your precompliance report as specified in § 63.2520(c)(8).

(4) Beginning no later than the compliance dates specified in § 63.2445(g), the referenced provisions specified in paragraphs (e)(4)(i) through (xvi) of this section do not apply when demonstrating compliance with subpart SS of this part.

(i) The phrase ''Except for equipment needed for safety purposes such as pressure relief devices, low leg drains, high point bleeds, analyzer vents, and open-

sfrattini on LAPJZKW1R2 with $$_JOB
VerDate Sep<11>2014 09:16 Apr 04, 2023 Jkt 256165 PO 00000 Frm 00438 Fmt 8010 Sfmt 8010 Q:\40\256165.XXX PC31

ended valves or lines'' in §63.983(a)(3) of subpart SS.

(ii) The second sentence of §63.983(a)(5) of subpart SS.

(iii) The phrase ''except during periods of start-up, shutdown and malfunction as specified in the referencing subpart'' in §63.984(a) of subpart SS.

(iv) The phrase ''except during periods of start-up, shutdown, and malfunction as specified in the referencing subpart'' in §63.985(a) of subpart SS.

(v) The phrase ''other than start-ups, shutdowns, or malfunctions'' in §63.994(c)(1)(ii)(D) of subpart SS.

(vi) Section 63.996(c)(2)(ii) of subpart SS.

(vii) The last sentence of §63.997(e)(1)(i) of subpart SS.

(viii) Section 63.998(b)(2)(iii) of subpart SS.

(ix) The phrase ''other than start-ups, shutdowns or malfunctions'' in §63.998(b)(5)(i)(A) of subpart SS.

(x) The phrase ''other than a start-up, shutdown, or malfunction'' from §63.998(b)(5)(i)(B)(*3*) of subpart SS.

(xi) The phrase ''other than start-ups, shutdowns or malfunctions'' in §63.998(b)(5)(i)(C) of subpart SS.

(xii) The phrase ''other than a start-up, shutdown, or malfunction'' from §63.998(b)(5)(ii)(C) of subpart SS.

(xiii) The phrase ''except as provided in paragraphs (b)(6)(i)(A) and (B) of this section'' in §63.998(b)(6)(i) of subpart SS.

(xiv) The second sentence of §63.998(b)(6)(ii) of subpart SS.

(xv) Section 63.998(c)(1)(ii)(D), (E), (F), and (G) of subpart SS.

(xvi) Section 63.998(d)(3) of subpart SS.

(5) For any flare that is used to reduce organic HAP emissions from an MCPU, you may elect to comply with the requirements in this paragraph in lieu of the requirements of §63.982(b) and the requirements referenced therein. However, beginning no later than the compliance dates specified in §63.2445(g), paragraphs (e)(2) and (f) of this section no longer apply to flares that control ethylene oxide emissions from affected sources in ethylene oxide service as defined in §63.2550 and flares used to control emissions from MCPUs that produce olefins or polyolefins. Instead, if you reduce organic HAP emissions by venting emissions through a closed-vent system to a steam-assisted, air-assisted, non-assisted, or pressure-assisted multi-point flare that controls ethylene oxide emissions from affected sources in ethylene oxide service as defined in §63.2550 or is used to control emissions from an MCPU that produces olefins or polyolefins, then you must meet the applicable requirements for flares as specified in §§63.670 and 63.671 of subpart CC, including the provisions in Tables 12 and 13 to subpart CC of this part, except as specified in paragraphs (e)(5)(i) through (xiii) of this section. This requirement in this paragraph (e)(5) also applies to any flare using fuel gas from a fuel gas system, of which 50 percent or more of the fuel gas is derived from an MCPU that has processes and/or equipment in ethylene oxide service or that produces olefins or polyolefins, as determined on an annual average basis. For purposes of compliance with this paragraph (e)(5), the following terms are defined in §63.641 of subpart CC: Assist air, assist steam, center steam, combustion zone, combustion zone gas, flare, flare purge gas, flare supplemental gas, flare sweep gas, flare vent gas, lower steam, net heating value, perimeter assist air, pilot gas, premix assist air, total steam, and upper steam. Also, for purposes of compliance with this paragraph (e)(5), ''MCPUs that produces olefins or polyolefins'' includes only those MCPUs that manufacture ethylene, propylene, polyethylene, and/or polypropylene as a product. By-products and impurities as defined in §63.101, as well as wastes and trace contaminants, are not considered products.

(i) When determining compliance with the pilot flame requirements specified in §63.670(b) and (g), substitute ''pilot flame or flare flame'' for each occurrence of ''pilot flame.''

(ii) When determining compliance with the flare tip velocity and combustion zone operating limits specified in §63.670(d) and (e), the requirement effectively applies starting with the 15-minute block that includes a full 15 minutes of the flaring event. You are required to demonstrate compliance with the velocity and NHVcz requirements starting with the block that

sfrattini on LAPJZKW1R2 with $$_JOB
VerDate Sep<11>2014 09:16 Apr 04, 2023 Jkt 256165 PO 00000 Frm 00439 Fmt 8010 Sfmt 8010 Q:\40\256165.XXX PC31

contains the fifteenth minute of a flaring event. You are not required to demonstrate compliance for the previous 15-minute block in which the event started and contained only a fraction of flow.

(iii) Instead of complying with paragraph (o)(2)(i) of § 63.670 of subpart CC, you must develop and implement the flare management plan no later than the compliance dates specified in § 63.2445(g).

(iv) Instead of complying with paragraph (o)(2)(iii) of § 63.670 of subpart CC, if required to develop a flare management plan and submit it to the Administrator, then you must also submit all versions of the plan in portable document format (PDF) to the EPA via the Compliance and Emissions Data Reporting Interface (CEDRI), which can be accessed through the EPA's Central Data Exchange (CDX) (*https://cdx.epa.gov/*). The EPA will make all the information submitted through CEDRI available to the public without further notice to you. Do not use CEDRI to submit information you claim as confidential business information (CBI). Anything submitted using CEDRI cannot later be claimed to be CBI. Although we do not expect persons to assert a claim of CBI, if you wish to assert a CBI claim, submit a version with the CBI omitted via CEDRI. A complete plan, including information claimed to be CBI and clearly marked as CBI, must be mailed to the following address: U.S. Environmental Protection Agency, Office of Air Quality Planning and Standards, Sector Policies and Programs Division, CORE CBI Office, U.S. EPA Mailroom (C404–02), Attention: Miscellaneous Organic Chemical Manufacturing Sector Lead, 4930 Old Page Rd., Durham, NC 27703. All CBI claims must be asserted at the time of submission. Furthermore, under CAA section 114(c) emissions data is not entitled to confidential treatment, and the EPA is required to make emissions data available to the public. Thus, emissions data will not be protected as CBI and will be made publicly available.

(v) Section 63.670(o)(3)(ii) of subpart CC and all references to § 63.670(o)(3)(ii) of subpart CC do not apply. Instead, the owner or operator must comply with the maximum flare tip velocity operating limit at all times.

(vi) Substitute ''MCPU'' for each occurrence of ''petroleum refinery.''

(vii) Each occurrence of ''refinery'' does not apply.

(viii) If a pressure-assisted multi-point flare is used as a control device, then you must meet the following conditions:

(A) You are not required to comply with the flare tip velocity requirements in paragraph (d) and (k) of § 63.670 of subpart CC;

(B) You must substitute ''800'' for each occurrence of ''270'' in paragraph (e) of § 63.670 of subpart CC;

(C) You must determine the 15-minute block average NHVvg using only the direct calculation method specified in in paragraph (l)(5)(ii) of § 63.670 of subpart CC;

(D) Instead of complying with paragraph (b) and (g) of § 63.670 of subpart CC, if a pressure-assisted multi-point flare uses cross-lighting on a stage of burners rather than having an individual pilot flame on each burner, then you must operate each stage of the pressure-assisted multi-point flare with a flame present at all times when regulated material is routed to that stage of burners. Each stage of burners that cross-lights in the pressure-assisted multi-point flare must have at least two pilots with at least one continuously lit and capable of igniting all regulated material that is routed to that stage of burners. Each 15-minute block during which there is at least one minute where no pilot flame is present on a stage of burners when regulated material is routed to the flare is a deviation of the standard. Deviations in different 15-minute blocks from the same event are considered separate deviations. The pilot flame(s) on each stage of burners that use cross-lighting must be continuously monitored by a thermocouple or any other equivalent device used to detect the presence of a flame;

(E) Unless you choose to conduct a cross-light performance demonstration as specified in this paragraph (e)(5)(viii)(E), you must ensure that if a stage of burners on the flare uses cross-lighting, that the distance between any two burners in series on that stage is

sfrattini on LAPJZKW1R2 with $$_JOB
VerDate Sep<11>2014 09:16 Apr 04, 2023 Jkt 256165 PO 00000 Frm 00440 Fmt 8010 Sfmt 8010 Q:\40\256165.XXX PC31

no more than 6 feet when measured from the center of one burner to the next burner. A distance greater than 6 feet between any two burners in series may be used provided you conduct a performance demonstration that confirms the pressure-assisted multi-point flare will cross-light a minimum of three burners and the spacing between the burners and location of the pilot flame must be representative of the projected installation. The compliance demonstration must be approved by the permitting authority and a copy of this approval must be maintained onsite. The compliance demonstration report must include: A protocol describing the test methodology used, associated test method QA/QC parameters, the waste gas composition and NHVcz of the gas tested, the velocity of the waste gas tested, the pressure-assisted multi-point flare burner tip pressure, the time, length, and duration of the test, records of whether a successful cross-light was observed over all of the burners and the length of time it took for the burners to cross-light, records of maintaining a stable flame after a successful cross-light and the duration for which this was observed, records of any smoking events during the cross-light, waste gas temperature, meteorological conditions (*e.g.*, ambient temperature, barometric pressure, wind speed and direction, and relative humidity), and whether there were any observed flare flameouts; and

(F) You must install and operate pressure monitor(s) on the main flare header, as well as a valve position indicator monitoring system for each staging valve to ensure that the flare operates within the proper range of conditions as specified by the manufacturer. The pressure monitor must meet the requirements in Table 13 to subpart CC of this part.

(G) If a pressure-assisted multi-point flare is operating under the requirements of an approved alternative means of emission limitations, you must either continue to comply with the terms of the alternative means of emission limitations or comply with the provisions in paragraphs (e)(5)(viii)(A) through (F) of this section.

(ix) If you choose to determine compositional analysis for net heating value with a continuous process mass spectrometer, then you must comply with the requirements specified in paragraphs (e)(5)(ix)(A) through (G) of this section.

(A) You must meet the requirements in § 63.671(e)(2). You may augment the minimum list of calibration gas components found in § 63.671(e)(2) with compounds found during a pre-survey or known to be in the gas through process knowledge.

(B) Calibration gas cylinders must be certified to an accuracy of 2 percent and traceable to National Institute of Standards and Technology (NIST) standards.

(C) For unknown gas components that have similar analytical mass fragments to calibration compounds, you may report the unknowns as an increase in the overlapped calibration gas compound. For unknown compounds that produce mass fragments that do not overlap calibration compounds, you may use the response factor for the nearest molecular weight hydrocarbon in the calibration mix to quantify the unknown component's NHVvg.

(D) You may use the response factor for n-pentane to quantify any unknown components detected with a higher molecular weight than n-pentane.

(E) You must perform an initial calibration to identify mass fragment overlap and response factors for the target compounds.

(F) You must meet applicable requirements in Performance Specification 9 of 40 CFR part 60, appendix B, for continuous monitoring system acceptance including, but not limited to, performing an initial multi-point calibration check at three concentrations following the procedure in Section 10.1 and performing the periodic calibration requirements listed for gas chromatographs in Table 13 to subpart CC of this part, for the process mass spectrometer. You may use the alternative sampling line temperature allowed under Net Heating Value by Gas Chromatograph in Table 13 to subpart CC of this part.

(G) The average instrument calibration error (CE) for each calibration

sfrattini on LAPJZKW1R2 with $$_JOB
VerDate Sep<11>2014 09:16 Apr 04, 2023 Jkt 256165 PO 00000 Frm 00441 Fmt 8010 Sfmt 8010 Q:\40\256165.XXX PC31

compound at any calibration concentration must not differ by more than 10 percent from the certified cylinder gas value. The CE for each component in the calibration blend must be calculated using Equation 1 to this paragraph (e)(5)(ix)(G).

$$CE = \frac{C_m - C_a}{C_a} x\ 100 \text{ (Eq. 1)}$$

Where:

Cm = Average instrument response (ppm).
Ca = Certified cylinder gas value (ppm).

(x) If you use a gas chromatograph or mass spectrometer for compositional analysis for net heating value, then you may choose to use the CE of $NHV_{measured}$ versus the cylinder tag value NHV as the measure of agreement for daily calibration and quarterly audits in lieu of determining the compound-specific CE. The CE for NHV at any calibration level must not differ by more than 10 percent from the certified cylinder gas value. The CE for must be calculated using Equation 2 to this paragraph (e)(5)(x).

$$CE = \frac{NHV_{measured} - NHV_a}{NHV_a} x\ 100 \text{ (Eq. 2)}$$

Where:

$NHV_{measured}$ = Average instrument response (Btu/scf).
NHV_a = Certified cylinder gas value (Btu/scf).

(xi) Instead of complying with paragraph (q) of § 63.670 of subpart CC, you must comply with the reporting requirements specified in § 63.2520(d)(3) and (e)(11).

(xii) Instead of complying with paragraph (p) of § 63.670 of subpart CC, you must keep the flare monitoring records specified in § 63.2525(m).

(xiii) You may elect to comply with the alternative means of emissions limitation requirements specified in paragraph (r) of § 63.670 of subpart CC in lieu of the requirements in paragraphs (d) through (f) of § 63.670 of subpart CC, as applicable. However, instead of complying with paragraph (r)(3)(iii) of § 63.670 of subpart CC, you must also submit the alternative means of emissions limitation request to the following address: U.S. Environmental Protection Agency, Office of Air Quality Planning and Standards, Sector Policies and Programs Division, U.S. EPA Mailroom (C404–02), Attention: Miscellaneous Organic Chemical Manufacturing Sector Lead, 4930 Old Page Rd., Durham, NC 27703.

(6) Beginning no later than the compliance dates specified in § 63.2445(g), the use of a bypass line at any time on a closed vent system to divert emissions subject to the requirements in Tables 1 through 7 to this subpart to the atmosphere or to a control device not meeting the requirements specified in Tables 1 through 7 to this subpart is an emissions standards deviation. You must also comply with the requirements specified in paragraphs (e)(6)(i) through (v) of this section, as applicable:

(i) If you are subject to the bypass monitoring requirements of § 63.148(f) of subpart G, then you must continue to comply with the requirements in § 63.148(f) of subpart G and the recordkeeping and reporting requirements in §§ 63.148(j)(2) and (3) of subpart G, and (h)(3) of subpart G, in addition to the applicable requirements specified in § 63.2485(q), the recordkeeping requirements specified in § 63.2525(n), and the reporting requirements specified in § 63.2520(e)(12).

(ii) If you are subject to the bypass monitoring requirements of § 63.172(j) of subpart H, then you must continue to comply with the requirements in

sfrattini on LAPJZKW1R2 with $$_JOB
VerDate Sep<11>2014 09:16 Apr 04, 2023 Jkt 256165 PO 00000 Frm 00442 Fmt 8010 Sfmt 8010 Q:\40\256165.XXX PC31
ER12AU20.000</GPH> ER12AU20.001</GPH>

§63.172(j) of subpart H and the recordkeeping and reporting requirements in §63.118(a)(3) and (4), and (f)(3) and (4) of subpart G, in addition to the applicable requirements specified in §§63.2480(f) and 63.2485(q), the recordkeeping requirements specified in §63.2525(n), and the reporting requirements specified in §63.2520(e)(12).

(iii) If you are subject to the bypass monitoring requirements of §63.983(a)(3) of subpart SS, then you must continue to comply with the requirements in §63.983(a)(3) of subpart SS and the recordkeeping and reporting requirements in §§63.998(d)(1)(ii) and 63.999(c)(2) of subpart SS, in addition to the requirements specified in §63.2450(e)(4), the recordkeeping requirements specified in §63.2525(n), and the reporting requirements specified in §63.2520(e)(12).

(iv) If you are subject to the bypass monitoring requirements of §65.143(a)(3) of this chapter, then you must continue to comply with the requirements in §65.143(a)(3) and the recordkeeping and reporting requirements in §§65.163(a)(1) and 65.166(b) of this chapter; in addition to the applicable requirements specified in §63.2480(f), the recordkeeping requirements specified in §63.2525(n), and the reporting requirements specified in §63.2520(e)(12).

(v) For purposes of compliance with this paragraph (e)(6), §§63.148(f)(3) of subpart G, and 63.172(j)(3) of subpart H, the phrase ''Except for equipment needed for safety purposes such as pressure relief devices, low leg drains, high point bleeds, analyzer vents, and open-ended valves or lines'' in §63.983(a)(3) of subpart SS, and the phrase ''Except for pressure relief devices needed for safety purposes, low leg drains, high point bleeds, analyzer vents, and open-ended valves or lines'' in §65.143(a)(3) of this chapter do not apply; instead, the exemptions specified in paragraphs (e)(6)(v)(A) and (B) of this section apply.

(A) Except for pressure relief devices subject to §63.2480(e)(4), equipment such as low leg drains and equipment subject to the requirements specified in §63.2480 are not subject to this paragraph (e)(6).

(B) Open-ended valves or lines that use a cap, blind flange, plug, or second valve and follow the requirements specified in 40 CFR 60.482–6(a)(2), (b), and (c) or follow requirements codified in another regulation that are the same as 40 CFR 60.482–6(a)(2), (b), and (c) are not subject to this paragraph (e)(6).

(7) Beginning no later than the compliance dates specified in §63.2445(g), if you reduce organic HAP emissions by venting emissions through a closed-vent system to an adsorber(s) that cannot be regenerated or a regenerative adsorber(s) that is regenerated offsite, then you must comply with paragraphs (e)(4) and (6) of this section and the requirements in §63.983, and you must install a system of two or more adsorber units in series and comply with the requirements specified in paragraphs (e)(7)(i) through (iii) of this section.

(i) Conduct an initial performance test or design evaluation of the adsorber and establish the breakthrough limit and adsorber bed life.

(ii) Monitor the HAP or total organic compound (TOC) concentration through a sample port at the outlet of the first adsorber bed in series according to the schedule in paragraph (e)(7)(iii)(B) of this section. You must measure the concentration of HAP or TOC using either a portable analyzer, in accordance with Method 21 of 40 CFR part 60, appendix A–7, using methane, propane, isobutylene, or the primary HAP being controlled as the calibration gas or Method 25A of 40 CFR part 60, appendix A–7, using methane, propane, or the primary HAP being controlled as the calibration gas.

(iii) Comply with paragraph (e)(7)(iii)(A) of this section, and comply with the monitoring frequency according to paragraph (e)(7)(iii)(B) of this section.

(A) The first adsorber in series must be replaced immediately when breakthrough, as defined in §63.2550(i), is detected between the first and second adsorber. The original second adsorber (or a fresh canister) will become the new first adsorber and a fresh adsorber will become the second adsorber. For purposes of this paragraph (e)(7)(iii)(A), ''immediately'' means within 8 hours of the detection of a breakthrough for adsorbers of 55 gallons or less, and within 24 hours of the detection of a

sfrattini on LAPJZKW1R2 with $$_JOB
VerDate Sep<11>2014 09:16 Apr 04, 2023 Jkt 256165 PO 00000 Frm 00443 Fmt 8010 Sfmt 8010 Q:\40\256165.XXX PC31

breakthrough for adsorbers greater than 55 gallons. You must monitor at the outlet of the first adsorber within 3 days of replacement to confirm it is performing properly.

(B) Based on the adsorber bed life established according to paragraph (e)(7)(i) of this section and the date the adsorbent was last replaced, conduct monitoring to detect breakthrough at least monthly if the adsorbent has more than 2 months of life remaining, at least weekly if the adsorbent has between 2 months and 2 weeks of life remaining, and at least daily if the adsorbent has 2 weeks or less of life remaining.

(f) *Requirements for flare compliance assessments.* Except as specified in paragraph (e)(5) of this section, you must comply with paragraphs (f)(1) and (2) of this section.

(1) As part of a flare compliance assessment required in § 63.987(b), you have the option of demonstrating compliance with the requirements of § 63.11(b) by complying with the requirements in either § 63.11(b)(6)(i) or § 63.987(b)(3)(ii).

(2) If you elect to meet the requirements in § 63.11(b)(6)(i), you must keep flare compliance assessment records as specified in paragraphs (f)(2)(i) and (ii) of this section.

(i) Keep records as specified in § 63.998(a)(1)(i), except that a record of the heat content determination is not required.

(ii) Keep records of the flare diameter, hydrogen content, exit velocity, and maximum permitted velocity. Include these records in the flare compliance report required in § 63.999(a)(2).

(g) *Requirements for performance tests.* The requirements specified in paragraphs (g)(1) through (7) of this section apply instead of or in addition to the requirements specified in subpart SS of this part.

(1) Conduct gas molecular weight analysis using Method 3, 3A, or 3B in appendix A to part 60 of this chapter.

(2) Measure moisture content of the stack gas using Method 4 in appendix A to part 60 of this chapter.

(3) If the uncontrolled or inlet gas stream to the control device contains carbon disulfide, you must conduct emissions testing according to paragraph (g)(3)(i) or (ii) of this section.

(i) If you elect to comply with the percent reduction emission limits in tables 1 through 7 to this subpart, and carbon disulfide is the principal organic HAP component (*i.e.,* greater than 50 percent of the HAP in the stream by volume), then you must use Method 18, or Method 15 (40 CFR part 60, appendix A) to measure carbon disulfide at the inlet and outlet of the control device. Use the percent reduction in carbon disulfide as a surrogate for the percent reduction in total organic HAP emissions.

(ii) If you elect to comply with the outlet TOC concentration emission limits in Tables 1 through 7 to this subpart, and the uncontrolled or inlet gas stream to the control device contains greater than 10 percent (volume concentration) carbon disulfide, you must use Method 18 or Method 15 of 40 CFR part 60, appendix A, to separately determine the carbon disulfide concentration. Calculate the total HAP or TOC emissions by totaling the carbon disulfide emissions measured using Method 18 or 15 of 40 CFR part 60, appendix A, and the other HAP emissions measured using Method 18 or 25A of 40 CFR part 60, appendix A.

(4) As an alternative to using Method 18, Method 25/25A, or Method 26/26A of 40 CFR part 60, appendix A, to comply with any of the emission limits specified in tables 1 through 7 to this subpart, you may use Method 320 of 40 CFR part 60, appendix A. When using Method 320, you must follow the analyte spiking procedures of section 13 of Method 320, unless you demonstrate that the complete spiking procedure has been conducted at a similar source.

(5) Section 63.997(c)(1) does not apply. For the purposes of this subpart, results of all initial compliance demonstrations must be included in the notification of compliance status report, which is due 150 days after the compliance date, as specified in § 63.2520(d)(1). If the initial compliance demonstration includes a performance test and the results are submitted electronically via CEDRI in accordance with § 63.2520(f), the process unit(s) tested, the pollutant(s) tested, and the date

sfrattini on LAPJZKW1R2 with $$_JOB
VerDate Sep<11>2014 09:16 Apr 04, 2023 Jkt 256165 PO 00000 Frm 00444 Fmt 8010 Sfmt 8010 Q:\40\256165.XXX PC31

that such performance test was conducted may be submitted in the notification of compliance status report in lieu of the performance test results. The performance test results must be submitted to CEDRI by the date the notification of compliance status report is submitted.

(6) Beginning no later than the compliance dates specified in §63.2445(g), in lieu of the requirements specified in §63.7(e)(1) of subpart A you must conduct performance tests under such conditions as the Administrator specifies based on representative performance of the affected source for the period being tested. Representative conditions exclude periods of startup and shutdown. You may not conduct performance tests during periods of malfunction. You must record the process information that is necessary to document operating conditions during the test and include in such record an explanation to support that such conditions represent normal operation. Upon request, you must make available to the Administrator such records as may be necessary to determine the conditions of performance tests.

(7) Comply with the requirements in §63.2450(e)(4), as applicable.

(h) *Design evaluation*. To determine the percent reduction of a small control device that is used to comply with an emission limit specified in Table 1, 2, 3, or 5 to this subpart, you may elect to conduct a design evaluation as specified in §63.1257(a)(1) instead of a performance test as specified in subpart SS of this part. You must establish the value(s) and basis for the operating limits as part of the design evaluation. For continuous process vents, the design evaluation must be conducted at maximum representative operating conditions for the process, unless the Administrator specifies or approves alternate operating conditions. For transfer racks, the design evaluation must demonstrate that the control device achieves the required control efficiency during the reasonably expected maximum transfer loading rate. Beginning no later than the compliance dates specified in §63.2445(i), this paragraph (h) does not apply to process vents in ethylene oxide service as defined in §63.2550.

(i) *Outlet concentration correction for combustion devices*. Except as specified in paragraph (i)(3) of this section, when §63.997(e)(2)(iii)(C) requires you to correct the measured concentration at the outlet of a combustion device to 3-percent oxygen if you add supplemental combustion air, the requirements in either paragraph (i)(1) or (2) of this section apply for the purposes of this subpart.

(1) You must correct the concentration in the gas stream at the outlet of the combustion device to 3 percent oxygen if you add supplemental gases, as defined in §63.2550, to the vent stream, or;

(2) You must correct the measured concentration for supplemental gases using Equation 1 in §63.2460(c)(6); you may use process knowledge and representative operating data to determine the fraction of the total flow due to supplemental gas.

(3) Beginning no later than the compliance dates specified in §63.2445(g), paragraphs (i)(1) and (2) of this section no longer apply. Instead, when §63.997(e)(2)(iii)(C) requires you to correct the measured concentration at the outlet of a combustion device to 3-percent oxygen if you add supplemental combustion air, you must follow the procedures in §63.997(e)(2)(iii)(C) to perform the concentration correction, except you may also use Method 3A of 40 CFR part 60, appendix A–2, to determine the oxygen concentration.

(j) *Continuous emissions monitoring systems*. Each continuous emissions monitoring system (CEMS) must be installed, operated, and maintained according to the requirements in §63.8 of subpart A and paragraphs (j)(1) through (6) of this section.

(1) Each CEMS must be installed, operated, and maintained according to the applicable Performance Specification of 40 CFR part 60, appendix B, and the applicable Quality Assurance Procedures of 40 CFR part 60, appendix F, and according to paragraph (j)(2) of this section, except as specified in paragraph (j)(1)(i) of this section. For any CEMS meeting Performance Specification 8 of 40 CFR part 60, appendix B, you must also comply with procedure 1 of 40 CFR part 60, appendix F. Locate the sampling probe or other

sfrattini on LAPJZKW1R2 with $$_JOB
VerDate Sep<11>2014 09:16 Apr 04, 2023 Jkt 256165 PO 00000 Frm 00445 Fmt 8010 Sfmt 8010 Q:\40\256165.XXX PC31

interface at a measurement location such that you obtain representative measurements of emissions from the regulated source. For CEMS installed after August 12, 2020, conduct a performance evaluation of each CEMS within 180 days of installation of the monitoring system.

(i) If you wish to use a CEMS other than a Fourier Transform Infrared Spectroscopy (FTIR) meeting the requirements of Performance Specification 15 of 40 CFR part 60, appendix B, to measure hydrogen halide, other than hydrogen chloride, and halogen HAP or CEMS meeting the requirements of Performance Specification 18 of 40 CFR part 60, appendix B, to measure hydrogen chloride before we promulgate a Performance Specification for such CEMS, you must prepare a monitoring plan and submit it for approval in accordance with the procedures specified in § 63.8 of subpart A.

(ii) [Reserved]

(2) You must determine the calibration gases and reporting units for TOC CEMS in accordance with paragraph (j)(2)(i), (ii), or (iii) of this section.

(i) For CEMS meeting Performance Specification 9 or 15 requirements, determine the target analyte(s) for calibration using either process knowledge of the control device inlet stream or the screening procedures of Method 18 on the control device inlet stream.

(ii) For CEMS meeting Performance Specification 8 used to monitor performance of a combustion device, calibrate the instrument on the predominant organic HAP and report the results as carbon (C1), and use Method 25A or any approved alternative as the reference method for the relative accuracy tests.

(iii) For CEMS meeting Performance Specification 8 of 40 CFR part 60, appendix B, used to monitor performance of a noncombustion device, determine the predominant organic HAP using either process knowledge or the screening procedures of Method 18 of 40 CFR part 60, appendix A–6, on the control device inlet stream, calibrate the monitor on the predominant organic HAP, and report the results as C_1. Use Method 18 of 40 CFR part 60, appendix A–6, Method 320 of appendix A to this part, ASTM D6420–18 (incorporated by reference, see § 63.14), or any approved alternative as the reference method for the relative accuracy tests, and report the results as C_1.

(3) You must conduct a performance evaluation of each CEMS according to the requirements in § 63.8 of subpart A and according to the applicable Performance Specification of 40 CFR part 60, appendix B, except that the schedule in § 63.8(e)(4) of subpart A does not apply, and before October 13, 2020, the results of the performance evaluation must be included in the notification of compliance status report. Unless otherwise specified in this subpart, beginning on and after October 13, 2020, the results of the performance evaluation must be submitted in accordance with § 63.2520(g).

(4) The CEMS data must be reduced to operating day or operating block averages computed using valid data consistent with the data availability requirements specified in § 63.999(c)(6)(i)(B) through (D), except monitoring data also are sufficient to constitute a valid hour of data if measured values are available for at least two of the 15-minute periods during an hour when calibration, quality assurance, or maintenance activities are being performed. An operating block is a period of time from the beginning to end of batch operations within a process. Operating block averages may be used only for batch process vent data. In computing operating day or operating block averages to determine compliance with this subpart, you must exclude monitoring data recorded during CEMS breakdowns, out-of-control periods, repairs, maintenance periods, calibration checks, or other quality assurance activities. Out-of-control periods are as specified in § 63.8(c)(7) of subpart A.

(5) If you add supplemental gases, you must comply with paragraphs (j)(5)(i) and (ii) of this section.

(i) Except as specified in paragraph (j)(5)(ii) of this section, correct the measured concentrations in accordance with paragraph (i) of this section and § 63.2460(c)(6).

(ii) Beginning no later than the compliance dates specified in § 63.2445(g), you must use Performance Specification 3 of 40 CFR part 60, appendix B, to

sfrattini on LAPJZKW1R2 with $$_JOB
VerDate Sep<11>2014 09:16 Apr 04, 2023 Jkt 256165 PO 00000 Frm 00446 Fmt 8010 Sfmt 8010 Q:\40\256165.XXX PC31

certify your oxygen CEMS, and you must comply with procedure 1 of 40 CFR part 60, appendix F. Use Method 3A of 40 CFR part 60, appendix A–2, as the reference method when conducting a relative accuracy test audit.

(6) Beginning no later than the compliance dates specified in §63.2445(g), in lieu of the requirements specified in §63.8(d)(3) of subpart A you must keep the written procedures required by §63.8(d)(2) of subpart A on record for the life of the affected source or until the affected source is no longer subject to the provisions of this part, to be made available for inspection, upon request, by the Administrator. If the performance evaluation plan is revised, you must keep previous (*i.e.*, superseded) versions of the performance evaluation plan on record to be made available for inspection, upon request, by the Administrator, for a period of 5 years after each revision to the plan. The program of corrective action should be included in the plan required under §63.8(d)(2) of subpart A. In addition to the information required in §63.8(d)(2) of subpart A, your written procedures for CEMS must include the information in paragraphs (j)(6)(i) through (vi) of this section:

(i) Description of CEMS installation location.

(ii) Description of the monitoring equipment, including the manufacturer and model number for all monitoring equipment components and the span of the analyzer.

(iii) Routine quality control and assurance procedures.

(iv) Conditions that would trigger a CEMS performance evaluation, which must include, at a minimum, a newly installed CEMS; a process change that is expected to affect the performance of the CEMS; and the Administrator's request for a performance evaluation under section 114 of the Clean Air Act.

(v) Ongoing operation and maintenance procedures in accordance with the general requirements of §63.8(c)(1) and (3), (c)(4)(ii), and (c)(7) and (8) of subpart A;

(vi) Ongoing recordkeeping and reporting procedures in accordance with the general requirements of §63.10(c) and (e)(1) of subpart A.

(k) *Continuous parameter monitoring.* The provisions in paragraphs (k)(1) through (8) of this section apply in addition to the requirements for continuous parameter monitoring system (CPMS) in subpart SS of this part.

(1) You must comply with paragraphs (k)(1)(i) and (ii) of this section.

(i) Except as specified in paragraph (k)(1)(ii) of this section, record the results of each calibration check and all maintenance performed on the CPMS as specified in §63.998(c)(1)(ii)(A).

(ii) Beginning no later than the compliance dates specified in §63.2445(g), paragraph (k)(1)(i) of this section no longer applies. Instead, you must record the results of each calibration check and all maintenance performed on the CPMS as specified in §63.998(c)(1)(ii)(A), except you must record all maintenance, not just preventative maintenance.

(2) When subpart SS of this part 63 uses the term ''a range'' or ''operating range'' of a monitored parameter, it means an ''operating limit'' for a monitored parameter for the purposes of this subpart.

(3) As an alternative to continuously measuring and recording pH as specified in §§63.994(c)(1)(i) and 63.998(a)(2)(ii)(D), you may elect to continuously monitor and record the caustic strength of the effluent. For halogen scrubbers used to control only batch process vents you may elect to monitor and record either the pH or the caustic strength of the scrubber effluent at least once per day.

(4) As an alternative to the inlet and outlet temperature monitoring requirements for catalytic incinerators as specified in §63.988(c)(2) and the related recordkeeping requirements specified in §63.998(a)(2)(ii)(B)(*2*) and (c)(2)(ii), you may elect to comply with the requirements specified in paragraphs (k)(4)(i) through (iv) of this section.

(i) Monitor and record the inlet temperature as specified in subpart SS of this part 63.

(ii) Check the activity level of the catalyst at least every 12 months and take any necessary corrective action, such as replacing the catalyst to ensure that the catalyst is performing as designed.

sfrattini on LAPJZKW1R2 with $$_JOB
VerDate Sep<11>2014 09:16 Apr 04, 2023 Jkt 256165 PO 00000 Frm 00447 Fmt 8010 Sfmt 8010 Q:\40\256165.XXX PC31

(iii) Maintain records of the annual checks of catalyst activity levels and the subsequent corrective actions.

(iv) Recording the downstream temperature and temperature difference across the catalyst bed as specified in § 63.998(a)(2)(ii)(B)(*2*) and (c)(2)(ii) is not required.

(5) For absorbers that control organic compounds and use water as the scrubbing fluid, you must conduct monitoring and recordkeeping as specified in paragraphs (k)(5)(i) through (iii) of this section instead of the monitoring and recordkeeping requirements specified in §§ 63.990(c)(1), 63.993(c)(1), and 63.998(a)(2)(ii)(C).

(i) You must use a flow meter capable of providing a continuous record of the absorber influent liquid flow.

(ii) You must determine gas stream flow using one of the procedures specified in § 63.994(c)(1)(ii)(A) through (D).

(iii) You must record the absorber liquid-to-gas ratio averaged over the time period of any performance test.

(6) For a control device with total inlet HAP emissions less than 1 tpy, you must establish an operating limit(s) for a parameter(s) that you will measure and record at least once per averaging period (i.e., daily or block) to verify that the control device is operating properly. You may elect to measure the same parameter(s) that is required for control devices that control inlet HAP emissions equal to or greater than 1 tpy. If the parameter will not be measured continuously, you must request approval of your proposed procedure in the precompliance report. You must identify the operating limit(s) and the measurement frequency, and you must provide rationale to support how these measurements demonstrate the control device is operating properly.

(7) Beginning no later than the compliance dates specified in § 63.2445(g), the manufacturer's specifications or your written procedures must include a schedule for calibrations, preventative maintenance procedures, a schedule for preventative maintenance, and corrective actions to be taken if a calibration fails. If a CPMS calibration fails, the CPMS is considered to be inoperative until you take corrective action and the system passes calibration. You must record the nature and cause of instances when the CPMS is inoperative and the corrective action taken.

(8) You must comply with the requirements in paragraph (e)(4) of this section, as applicable.

(l) *Startup, shutdown, and malfunction.* Sections 63.152(f)(7)(ii) through (iv) and 63.998(b)(2)(iii) and (b)(6)(i)(A), which apply to the exclusion of monitoring data collected during periods of SSM from daily averages, do not apply for the purposes of this subpart.

(m) *Reporting.* (1) When §§ 63.2455 through 63.2490 reference other subparts in this part 63 that use the term ''periodic report,'' it means ''compliance report'' for the purposes of this subpart. The compliance report must include the information specified in § 63.2520(e), as well as the information specified in referenced subparts.

(2) When there are conflicts between this subpart and referenced subparts for the due dates of reports required by this subpart, reports must be submitted according to the due dates presented in this subpart.

(3) Excused excursions, as defined in subparts G and SS of this part 63, are not allowed.

(n) [Reserved]

(o) You may not use a flare to control halogenated vent streams or hydrogen halide and halogen HAP emissions.

(p) *Original safety device requirements.* Except as specified in paragraph (t) of this section, opening a safety device, as defined in § 63.2550, is allowed at any time conditions require it to avoid unsafe conditions.

(q) If an emission stream contains energetics or organic peroxides that, for safety reasons, cannot meet an applicable emission limit specified in Tables 1 through 7 to this subpart, then you must submit documentation in your precompliance report explaining why an undue safety hazard would be created if the air emission controls were installed, and you must describe the procedures that you will implement to minimize HAP emissions from these vent streams.

(r) *Surge control vessels and bottoms receivers.* For each surge control vessel or bottoms receiver that meets the capacity and vapor pressure thresholds for a

sfrattini on LAPJZKW1R2 with $$_JOB
VerDate Sep<11>2014 09:16 Apr 04, 2023 Jkt 256165 PO 00000 Frm 00448 Fmt 8010 Sfmt 8010 Q:\40\256165.XXX PC31

Group 1 storage tank, you must meet emission limits and work practice standards specified in Table 4 to this subpart. Beginning no later than the compliance dates specified in §63.2445(i), for each surge control vessel and bottoms receiver in ethylene oxide service as defined in §63.2550, you must also meet the applicable process vent requirements specified in §§63.2492 and 63.2493(a) through (c).

(s) For the purposes of determining Group status for continuous process vents, batch process vents, and storage tanks in §§63.2455, 63.2460, and 63.2470, hydrazine is to be considered an organic HAP.

(t) *New safety device requirements.* Beginning no later than the compliance dates specified in §63.2445(g), paragraph (p) of this section no longer applies. Instead, you must comply with the requirements specified in §63.2480(e).

(u) *General duty.* Beginning no later than the compliance dates specified in §63.2445(g), at all times, you must operate and maintain any affected source, including associated air pollution control equipment and monitoring equipment, in a manner consistent with safety and good air pollution control practices for minimizing emissions. The general duty to minimize emissions does not require you to make any further efforts to reduce emissions if levels required by the applicable standard have been achieved. Determination of whether a source is operating in compliance with operation and maintenance requirements will be based on information available to the Administrator which may include, but is not limited to, monitoring results, review of operation and maintenance procedures, review of operation and maintenance records, and inspection of the source.

(v) *Maintenance vents.* Beginning no later than the compliance dates specified in §63.2445(g), you may designate a process vent as a maintenance vent if the vent is only used as a result of startup, shutdown, maintenance, or inspection of equipment where equipment is emptied, depressurized, degassed, or placed into service. You must comply with the applicable requirements in paragraphs (v)(1) through (3) of this section for each maintenance vent. Any vent designated as a maintenance vent is only subject to the maintenance vent provisions in this paragraph (v) and the associated recordkeeping and reporting requirements in §§63.2525(p) and 63.2520(e)(14), respectively. You do not need to designate a maintenance vent as a Group 1 or Group 2 process vent nor identify maintenance vents in a Notification of Compliance Status report.

(1) Prior to venting to the atmosphere, remove process liquids from the equipment as much as practical and depressurize the equipment to either: A flare meeting the requirements of paragraph (e)(2) or (5) of this section, as applicable, or a non-flare control device meeting the requirements in paragraph (e)(4) of this section and the requirements specified in §63.982(c)(2) of subpart SS until one of the following conditions, as applicable, is met.

(i) The vapor in the equipment served by the maintenance vent has a lower explosive limit (LEL) of less than 10 percent and has an outlet concentration less than or equal to 20 ppmv hydrogen halide and halogen HAP.

(ii) If there is no ability to measure the LEL of the vapor in the equipment based on the design of the equipment, the pressure in the equipment served by the maintenance vent is reduced to 5 pounds per square inch gauge (psig) or less. Upon opening the maintenance vent, active purging of the equipment cannot be used until the LEL of the vapors in the maintenance vent (or inside the equipment if the maintenance is a hatch or similar type of opening) is less than 10 percent.

(iii) The equipment served by the maintenance vent contains less than 50 pounds of total volatile organic compounds (VOC).

(iv) If, after applying best practices to isolate and purge equipment served by a maintenance vent, none of the applicable criterion in paragraphs (v)(1)(i) through (iii) of this section can be met prior to installing or removing a blind flange or similar equipment blind, then the pressure in the equipment served by the maintenance vent must be reduced to 2 psig or less before installing or removing the equipment blind. During installation or removal of the equipment blind, active purging of the

sfrattini on LAPJZKW1R2 with $$_JOB
VerDate Sep<11>2014 09:16 Apr 04, 2023 Jkt 256165 PO 00000 Frm 00449 Fmt 8010 Sfmt 8010 Q:\40\256165.XXX PC31

equipment may be used provided the equipment pressure at the location where purge gas is introduced remains at 2 psig or less.

(2) Except for maintenance vents complying with the alternative in paragraph (v)(1)(iii) of this section, you must determine the LEL or, if applicable, equipment pressure using process instrumentation or portable measurement devices and follow procedures for calibration and maintenance according to manufacturer's specifications.

(3) For maintenance vents complying with the alternative in paragraph (v)(1)(iii) of this section, you must determine mass of VOC in the equipment served by the maintenance vent based on the equipment size and contents after considering any contents drained or purged from the equipment. Equipment size may be determined from equipment design specifications. Equipment contents may be determined using process knowledge.

[68 FR 63888, Nov. 10, 2003, as amended at 70 FR 38559, July 1, 2005; 71 FR 40332, July 14, 2006; 85 FR 49133, Aug. 12, 2020]

§ 63.2455 What requirements must I meet for continuous process vents?

(a) You must meet each emission limit in Table 1 to this subpart that applies to your continuous process vents, and you must meet each applicable requirement specified in paragraphs (b) through (c) of this section and §§ 63.2492 and 63.2493(a) through (c).

(b) For each continuous process vent, you must either designate the vent as a Group 1 continuous process vent or determine the total resource effectiveness (TRE) index value as specified in § 63.115(d), except as specified in paragraphs (b)(1) through (3) of this section.

(1) You are not required to determine the Group status or the TRE index value for any continuous process vent that is combined with Group 1 batch process vents before a control device or recovery device because the requirements of § 63.2450(c)(2)(i) apply to the combined stream.

(2) When a TRE index value of 4.0 is referred to in § 63.115(d), TRE index values of 5.0 for existing affected sources and 8.0 for new and reconstructed affected sources apply for the purposes of this subpart.

(3) When § 63.115(d) refers to ''emission reductions specified in § 63.113(a),'' the reductions specified in Table 1 to this subpart apply for the purposes of this subpart.

(c) If you use a recovery device to maintain the TRE above a specified threshold, you must meet the requirements of § 63.982(e) and the requirements referenced therein, except as specified in § 63.2450 and paragraph (c)(1) of this section.

(1) When § 63.993 uses the phrase ''the TRE index value is between the level specified in a referencing subpart and 4.0,'' the phrase ''the TRE index value is >1.9 but ≤5.0'' applies for an existing affected source, and the phrase ''the TRE index value is >5.0 but ≤8.0'' applies for a new and reconstructed affected source, for the purposes of this subpart.

(2) [Reserved]

[68 FR 63888, Nov. 10, 2003, as amended at 85 FR 49139, Aug. 12, 2020]

§ 63.2460 What requirements must I meet for batch process vents?

(a) *General.* You must meet each emission limit in Table 2 to this subpart that applies to you, and you must meet each applicable requirement specified in paragraphs (b) and (c) of this section and §§ 63.2492 and 63.2493(a) through (c).

(b) *Group status.* If a process has batch process vents, as defined in § 63.2550, you must determine the group status of the batch process vents by determining and summing the uncontrolled organic HAP emissions from each of the batch process vents within the process using the procedures specified in § 63.1257(d)(2)(i) and (ii), except as specified in paragraphs (b)(1) through (7) of this section.

(1) To calculate emissions caused by the heating of a vessel without a process condenser to a temperature lower than the boiling point, you must use the procedures in § 63.1257(d)(2)(i)(C)(*3*).

(2) To calculate emissions from depressurization of a vessel without a process condenser, you must use the procedures in § 63.1257(d)(2)(i)(D)(*10*).

(3) To calculate emissions from vacuum systems for the purposes of this subpart, the receiving vessel is part of the vacuum system, and terms used in

sfrattini on LAPJZKW1R2 with $$_JOB
VerDate Sep<11>2014 09:16 Apr 04, 2023 Jkt 256165 PO 00000 Frm 00450 Fmt 8010 Sfmt 8010 Q:\40\256165.XXX PC31

Equation 33 to 40 CFR part 63, subpart GGG, are defined as follows:

P_{system} = absolute pressure of the receiving vessel;

P_i = partial pressure of the HAP determined at the exit temperature and exit pressure conditions of the condenser or at the conditions of the dedicated receiver;

P_j = partial pressure of condensables (including HAP) determined at the exit temperature and exit pressure conditions of the condenser or at the conditions of the dedicated receiver;

MW_{HAP} = molecular weight of the HAP determined at the exit temperature and exit pressure conditions of the condenser or at the conditions of the dedicated receiver.

(4) To calculate uncontrolled emissions when a vessel is equipped with a process condenser, you must use the procedures in §63.1257(d)(3)(i)(B), except as specified in paragraphs (b)(4)(i) through (vii) of this section.

(i) You must determine the flowrate of gas (or volume of gas), partial pressures of condensables, temperature (T), and HAP molecular weight (MW_{HAP}) at the exit temperature and exit pressure conditions of the condenser or at the conditions of the dedicated receiver.

(ii) You must assume that all of the components contained in the condenser exit vent stream are in equilibrium with the same components in the exit condensate stream (except for noncondensables).

(iii) You must perform a material balance for each component.

(iv) For the emissions from gas evolution, the term for time, t, must be used in Equation 12 to 40 CFR part 63, subpart GGG.

(v) Emissions from empty vessel purging shall be calculated using Equation 36 to 40 CFR part 63, subpart GGG and the exit temperature and exit pressure conditions of the condenser or the conditions of the dedicated receiver.

(vi) You must conduct an engineering assessment as specified in §63.1257(d)(2)(ii) for each emission episode that is not due to vapor displacement, purging, heating, depressurization, vacuum operations, gas evolution, air drying, or empty vessel purging. The requirements of paragraphs (b)(3) through (4) of this section shall apply.

(vii) You may elect to conduct an engineering assessment if you can demonstrate to the Administrator that the methods in §63.1257(d)(3)(i)(B) are not appropriate.

(5) You may elect to designate the batch process vents within a process as Group 1 and not calculate uncontrolled emissions if you comply with one of the situations in paragraph (b)(5)(i), (ii), or (iii) of this section.

(i) If you comply with the alternative standard specified in §63.2505.

(ii) If all Group 1 batch process vents within a process are controlled; you conduct the performance test under hypothetical worst case conditions, as defined in §63.1257(b)(8)(i)(B); and the emission profile is based on capture and control system limitations as specified in §63.1257(b)(8)(ii)(C).

(iii) If you comply with an emission limit using a flare that meets the requirements specified in §63.987 or §63.2450(e)(5), as applicable.

(6) You may change from Group 2 to Group 1 in accordance with either paragraph (b)(6)(i) or (ii) of this section. Before October 13, 2020, you must comply with the requirements of this section and submit the test report. Beginning on and after October 13, 2020, you must comply with the requirements of this section and submit the performance test report for the demonstration required in §63.1257(b)(8) in accordance with §63.2520(f).

(i) You may switch at any time after operating as Group 2 for at least 1 year so that you can show compliance with the 10,000 pounds per year (lb/yr) threshold for Group 2 batch process vents for at least 365 days before the switch. You may elect to start keeping records of emissions from Group 2 batch process vents before the compliance date. Report a switch based on this provision in your next compliance report in accordance with §63.2520(e)(10)(i).

(ii) If the conditions in paragraph (b)(6)(i) of this section are not applicable, you must provide a 60-day advance notice in accordance with §63.2520(e)(10)(ii) before switching.

sfrattini on LAPJZKW1R2 with $$_JOB
VerDate Sep<11>2014 09:16 Apr 04, 2023 Jkt 256165 PO 00000 Frm 00451 Fmt 8010 Sfmt 8010 Q:\40\256165.XXX PC31

(7) As an alternative to determining the uncontrolled organic HAP emissions as specified in § 63.1257(d)(2)(i) and (ii), you may elect to demonstrate that non-reactive organic HAP are the only HAP used in the process and non-reactive HAP usage in the process is less than 10,000 lb/yr. You must provide data and supporting rationale in your notification of compliance status report explaining why the non-reactive organic HAP usage will be less than 10,000 lb/yr. You must keep records of the non-reactive organic HAP usage as specified in § 63.2525(e)(2) and include information in compliance reports as specified in § 63.2520(e)(5)(iv).

(c) Exceptions to the requirements in subparts SS and WW of this part 63 are specified in paragraphs (c)(1) through (9) of this section.

(1) *Process condensers.* Process condensers, as defined in § 63.2550(i), are not considered to be control devices for batch process vents. You must determine whether a condenser is a control device for a batch process vent or a process condenser from which the uncontrolled HAP emissions are evaluated as part of the initial compliance demonstration for each MCPU and report the results with supporting rationale in your notification of compliance status report.

(2) *Initial compliance.* (i) To demonstrate initial compliance with a percent reduction emission limit in Table 2 to this subpart, you must compare the sums of the controlled and uncontrolled emissions for the applicable Group 1 batch process vents within the process, and show that the specified reduction is met. This requirement does not apply if you comply with the emission limits of Table 2 to this subpart by using a flare that meets the requirements of § 63.987 or 63.2450(e)(5), as applicable.

(ii) When you conduct a performance test or design evaluation for a nonflare control device used to control emissions from batch process vents, you must establish emission profiles and conduct the test under worst-case conditions according to § 63.1257(b)(8) instead of under normal operating conditions as specified in § 63.7(e)(1) of subpart A or the conditions as specified in § 63.2450(g)(6). The requirements in § 63.997(e)(1)(i) and (iii) also do not apply for performance tests conducted to determine compliance with the emission limits for batch process vents. For purposes of this subpart, references in § 63.997(b)(1) to ''methods specified in § 63.997(e)'' include the methods specified in § 63.1257(b)(8).

(iii) As an alternative to conducting a performance test or design evaluation to demonstrate initial compliance with a percent reduction requirement for a condenser, you may determine controlled emissions using the procedures specified in § 63.1257(d)(3)(i)(B) and paragraphs (b)(3) through (4) of this section.

(iv) When § 63.1257(d)(3)(i)(B)(*7*) specifies that condenser-controlled emissions from an air dryer must be calculated using Equation 11 of 40 CFR part 63, subpart GGG, with ''V equal to the air flow rate,'' it means ''V equal to the dryer outlet gas flow rate,'' for the purposes of this subpart. Alternatively, you may use Equation 12 of 40 CFR part 63, subpart GGG, with V equal to the dryer inlet air flow rate. Account for time as appropriate in either equation.

(v) If a process condenser is used for boiling operations in which HAP (not as an impurity) is heated to the boiling point, you must demonstrate that it is properly operated according to the procedures specified in § 63.1257(d)(2)(i)(C)(*4*)(*ii*) and (d)(3)(iii)(B), and the demonstration must occur only during the boiling operation. The reference in § 63.1257(d)(3)(iii)(B) to the alternative standard in § 63.1254(c) means § 63.2505 for the purposes of this subpart. As an alternative to measuring the exhaust gas temperature, as required by § 63.1257(d)(3)(iii)(B), you may elect to measure the liquid temperature in the receiver.

(vi) You must conduct a subsequent performance test or compliance demonstration equivalent to an initial compliance demonstration within 180 days of a change in the worst-case conditions.

(3) *Establishing operating limits.* You must establish operating limits under the conditions required for your initial compliance demonstration, except you may elect to establish operating

sfrattini on LAPJZKW1R2 with $$_JOB
VerDate Sep<11>2014 09:16 Apr 04, 2023 Jkt 256165 PO 00000 Frm 00452 Fmt 8010 Sfmt 8010 Q:\40\256165.XXX PC31

limit(s) for conditions other than those under which a performance test was conducted as specified in paragraph (c)(3)(i) of this section and, if applicable, paragraph (c)(3)(ii) of this section.

(i) The operating limits may be based on the results of the performance test and supplementary information such as engineering assessments and manufacturer's recommendations. These limits may be established for conditions as unique as individual emission episodes for a batch process. You must provide rationale in the precompliance report for the specific level for each operating limit, including any data and calculations used to develop the limit and a description of why the limit indicates proper operation of the control device. The procedures provided in this paragraph (c)(3)(i) have not been approved by the Administrator and determination of the operating limit using these procedures is subject to review and approval by the Administrator.

(ii) If you elect to establish separate monitoring levels for different emission episodes within a batch process, you must maintain records in your daily schedule or log of processes indicating each point at which you change from one operating limit to another, even if the duration of the monitoring for an operating limit is less than 15 minutes. You must maintain a daily schedule or log of processes according to §63.2525(c).

(4) *Averaging periods*. As an alternative to the requirement for daily averages in §63.998(b)(3), you may determine averages for operating blocks. An operating block is a period of time that is equal to the time from the beginning to end of batch process operations within a process.

(5) [Reserved]

(6) *Outlet concentration correction for supplemental gases*. If you use a control device other than a combustion device to comply with a TOC, organic HAP, or hydrogen halide and halogen HAP outlet concentration emission limit for batch process vents, you must correct the actual concentration for supplemental gases using Equation 1 to this paragraph (e)(6); you may use process knowledge and representative operating data to determine the fraction of the total flow due to supplemental gas.

$$C_a = C_m\left(\frac{Q_s + Q_a}{Q_a}\right) \qquad \text{(Eq. 1)}$$

Where:

C_a = corrected outlet TOC, organic HAP, or hydrogen halide and halogen HAP concentration, dry basis, ppmv;

C_m = actual TOC, organic HAP, or hydrogen halide and halogen HAP concentration measured at control device outlet, dry basis, ppmv;

Q_a = total volumetric flowrate of all gas streams vented to the control device, except supplemental gases;

Q_s = total volumetric flowrate of supplemental gases.

(7) If flow to a control device could be intermittent, you must install, calibrate, and operate a flow indicator at the inlet or outlet of the control device to identify periods of no flow. Periods of no flow may not be used in daily or block averages, and it may not be used in fulfilling a minimum data availability requirement.

(8) *Terminology*. When the term ''storage vessel'' is used in subpart WW of this part 63, the term ''process tank,'' as defined in §63.2550(i), applies for the purposes of this section.

(9) *Requirements for a biofilter*. If you use a biofilter to meet either the95-percent reduction requirement or outlet concentration requirement specified in Table 2 to this subpart, you must meet the requirements specified in paragraphs (c)(9)(i) through (vi) of this section.

(i) *Operational requirements*. The biofilter must be operated at all times when emissions are vented to it.

(ii) *Performance tests*. To demonstrate initial compliance, you must conduct a performance test according to the procedures in §§63.2450(g) and 63.997 of subpart SS, and paragraphs (c)(9)(ii)(A) through (D) of this section. The design evaluation option for small control devices is not applicable if you use a biofilter.

(A) Keep up-to-date, readily accessible continuous records of either the biofilter bed temperature averaged over the full period of the performance test or the outlet total organic HAP or TOC concentration averaged over the full period of the performance test. Include these data in your notification of

sfrattini on LAPJZKW1R2 with $$_JOB
VerDate Sep<11>2014 09:16 Apr 04, 2023 Jkt 256165 PO 00000 Frm 00453 Fmt 8010 Sfmt 8010 Q:\40\256165.XXX PC31
ER10NO03.000<MATH>

compliance status report as required by § 63.999(b)(3)(ii).

(B) Record either the percent reduction of total organic HAP achieved by the biofilter determined as specified in § 63.997(e)(2)(iv) or the concentration of TOC or total organic HAP determined as specified in § 63.997(e)(2)(iii) at the outlet of the biofilter, as applicable.

(C) If you monitor the biofilter bed temperature, you may elect to use multiple thermocouples in representative locations throughout the biofilter bed and calculate the average biofilter bed temperature across these thermocouples prior to reducing the temperature data to 15 minute (or shorter) averages for purposes of establishing operating limits for the biofilter. If you use multiple thermocouples, include your rationale for their site selection in your notification of compliance status report.

(D) Before October 13, 2020, submit a performance test report as specified in § 63.999(a)(2)(i) and (ii) and include the records from paragraph (c)(9)(ii)(B) of this section. Beginning on and after October 13, 2020, you must submit a performance test report as specified in § 63.2520(f).

(iii) *Monitoring requirements.* Use either a biofilter bed temperature monitoring device (or multiple devices) capable of providing a continuous record or an organic monitoring device capable of providing a continuous record. Comply with the requirements in § 63.2450(e)(4), the general requirements for monitoring in § 63.996, and keep records of temperature or other parameter monitoring results as specified in § 63.998(b) and (c), as applicable. If you monitor temperature, the operating temperature range must be based on only the temperatures measured during the performance test; these data may not be supplemented by engineering assessments or manufacturer's recommendations as otherwise allowed in § 63.999(b)(3)(ii)(A). If you establish the operating range (minimum and maximum temperatures) using data from previous performance tests in accordance with § 63.996(c)(6), replacement of the biofilter media with the same type of media is not considered a process change under § 63.997(b)(1). You may expand your biofilter bed temperature operating range by conducting a repeat performance test that demonstrates compliance with the 95-percent reduction requirement or outlet concentration limit, as applicable.

(iv) *Repeat performance tests.* You must conduct a repeat performance test using the applicable methods specified in §§ 63.2450(g) and 63.997 within 2 years following the previous performance test and within 150 days after each replacement of any portion of the biofilter bed media with a different type of media or each replacement of more than 50 percent (by volume) of the biofilter bed media with the same type of media.

[68 FR 63888, Nov. 10, 2003, as amended at 70 FR 38559, July 1, 2005; 71 FR 40333, July 14, 2006; 85 FR 49139, Aug. 12, 2020]

§ 63.2465 What requirements must I meet for process vents that emit hydrogen halide and halogen HAP or HAP metals?

(a) You must meet each emission limit in Table 3 to this subpart that applies to you, and you must meet each applicable requirement in paragraphs (b) through (d) of this section.

(b) If any process vents within a process emit hydrogen halide and halogen HAP, you must determine and sum the uncontrolled hydrogen halide and halogen HAP emissions from each of the process vents within the process using the procedures specified in § 63.1257(d)(2)(i) and/or (ii), as appropriate. When § 63.1257(d)(2)(ii)(E) requires documentation to be submitted in the precompliance report, it means the notification of compliance status report for the purposes of this paragraph.

(c) If collective uncontrolled hydrogen halide and halogen HAP emissions from the process vents within a process are greater than or equal to 1,000 pounds per year (lb/yr), you must comply with the requirements in § 63.2450(e)(4) and the requirements of § 63.994 and the requirements referenced therein, except as specified in paragraphs (c)(1) through (3) of this section.

(1) When § 63.994(b)(1) requires a performance test, you may elect to conduct a design evaluation in accordance with § 63.1257(a)(1).

sfrattini on LAPJZKW1R2 with $$_JOB
VerDate Sep<11>2014 09:16 Apr 04, 2023 Jkt 256165 PO 00000 Frm 00454 Fmt 8010 Sfmt 8010 Q:\40\256165.XXX PC31

(2) When §63.994(b)(1) refers to ''a combustion device followed by a halogen scrubber or other halogen reduction device,'' it means any combination of control devices used to meet the emission limits specified in Table 3 to this subpart.

(3) Section 63.994(b)(2) does not apply for the purposes of this section.

(d) To demonstrate compliance with the emission limit in Table 3 to this subpart for HAP metals at a new source, you must comply with paragraphs (d)(1) through (3) of this section.

(1) Determine the mass emission rate of HAP metals based on process knowledge, engineering assessment, or test data.

(2) Conduct an initial performance test of each control device that is used to comply with the emission limit for HAP metals specified in Table 3 to this subpart. Conduct the performance test according to the procedures in §§63.2450(g) and 63.997. Use Method 29 of 40 CFR part 60, appendix A, to determine the HAP metals at the inlet and outlet of each control device, or use Method 5 of 40 CFR part 60, appendix A, to determine the total particulate matter (PM) at the inlet and outlet of each control device. You may use ASTM D6784–02 (Reapproved 2008) (incorporated by reference, see §63.14) as an alternative to Method 29 (portion for mercury only) as a method for measuring mercury concentrations of 0.5 to 100 micrograms per standard cubic meter. You have demonstrated initial compliance if the overall reduction of either HAP metals or total PM from the process is greater than or equal to 97 percent by weight.

(3) Comply with the monitoring requirements specified in §63.1366(b)(1)(xi) for each fabric filter used to control HAP metals.

[68 FR 63888, Nov. 10, 2003, as amended at 71 FR 40334, July 14, 2006; 85 FR 49140, Aug. 12, 2020]

§63.2470 What requirements must I meet for storage tanks?

(a) *General.* You must meet each emission limit in Table 4 to this subpart that applies to your storage tanks, and except as specified in paragraph (b) of this section, you must also meet each applicable requirement specified in paragraphs (c) through (f) of this section and §§63.2492 and 63.2493(a) through (c).

(b) *General for storage tanks in ethylene oxide service.* On and after the compliance dates specified in §63.2445(i), paragraphs (d) and (e) of this section do not apply to storage tanks in ethylene oxide service as defined in §63.2550.

(c) *Exceptions to subparts SS and WW of this part.* (1) Except as specified in paragraph (c)(4)(ii) of this section, if you conduct a performance test or design evaluation for a control device used to control emissions only from storage tanks, you must establish operating limits, conduct monitoring, and keep records using the same procedures as required in subpart SS of this part for control devices used to reduce emissions from process vents instead of the procedures specified in §§63.985(c), 63.998(d)(2)(i), and 63.999(b)(2). You must also comply with the requirements in §63.2450(e)(4), as applicable.

(2) Except as specified in paragraph (c)(4) of this section, when the term ''storage vessel'' is used in subparts SS and WW of this part, the term ''storage tank,'' as defined in §63.2550 applies for the purposes of this subpart.

(3) For adsorbers that cannot be regenerated or regenerative adsorbers that are regenerated offsite, you must comply with the monitoring requirements in §63.2450(e)(7) in lieu of §63.995(c).

(4) Beginning no later than the compliance dates specified in §63.2445(i), you must comply with paragraphs (c)(4)(i) and (ii) of this section.

(i) The exemptions for ''vessels storing organic liquids that contain HAP only as impurities'' and ''pressure vessels designed to operate in excess of 204.9 kilopascals and without emissions to the atmosphere'' listed in the definition of ''storage tank'' in §63.2550 do not apply for storage tanks in ethylene oxide service.

(ii) For storage tanks in ethylene oxide service as defined in §63.2550, you may not use a design evaluation to determine the percent reduction of any control device that is used to comply with an emission limit specified in Table 4 to this subpart.

sfrattini on LAPJZKW1R2 with $$_JOB
VerDate Sep<11>2014 09:16 Apr 04, 2023 Jkt 256165 PO 00000 Frm 00455 Fmt 8010 Sfmt 8010 Q:\40\256165.XXX PC31

(d) *Planned routine maintenance.* The emission limits in Table 4 to this subpart for control devices used to control emissions from storage tanks do not apply during periods of planned routine maintenance. Periods of planned routine maintenance of each control device, during which the control device does not meet the emission limit specified in Table 4 to this subpart, must not exceed 240 hours per year (hr/yr). You may submit an application to the Administrator requesting an extension of this time limit to a total of 360 hr/yr. The application must explain why the extension is needed, it must indicate that no material will be added to the storage tank between the time the 240-hr limit is exceeded and the control device is again operational, and it must be submitted at least 60 days before the 240-hr limit will be exceeded.

(e) *Vapor balancing alternative.* As an alternative to the emission limits specified in Table 4 to this subpart, you may elect to implement vapor balancing in accordance with § 63.1253(f), except as specified in paragraphs (e)(1) through (3) of this section.

(1) When § 63.1253(f)(6)(i) refers to a 90 percent reduction, 95 percent applies for the purposes of this subpart.

(2) To comply with § 63.1253(f)(6)(i), the owner or operator of an offsite cleaning or reloading facility must comply with §§ 63.2445 through 63.2550 instead of complying with § 63.1253(f)(7)(ii), except as specified in paragraph (e)(2)(i) or (ii) of this section.

(i) The reporting requirements in § 63.2520 do not apply to the owner or operator of the offsite cleaning or reloading facility.

(ii) As an alternative to complying with the monitoring, recordkeeping, and reporting provisions in §§ 63.2445 through 63.2550, the owner or operator of an offsite cleaning or reloading facility may comply as specified in § 63.2535(a)(2) with any other subpart of this part 63 which has monitoring, recordkeeping, and reporting provisions as specified in § 63.2535(a)(2).

(3) You may elect to set a pressure relief device to a value less than the 2.5 psig required in § 63.1253(f)(5) if you provide rationale in your notification of compliance status report explaining why the alternative value is sufficient to prevent breathing losses at all times.

(4) You may comply with the vapor balancing alternative in § 63.1253(f) when your storage tank is filled from a barge. All requirements for tank trucks and railcars specified in § 63.1253(f) also apply to barges, except as specified in § 63.2470(e)(4)(i).

(i) When § 63.1253(f)(2) refers to pressure testing certifications, the requirements in 40 CFR 61.304(f) apply for barges.

(ii) [Reserved]

(f) *Storage tank degassing.* Beginning no later than the compliance dates specified in § 63.2445(g), for each storage tank subject to item 1 of Table 4 to this subpart, you must comply with paragraphs (f)(1) through (3) of this section during storage tank shutdown operations (*i.e.*, emptying and degassing of a storage tank) until the vapor space concentration in the storage tank is less than 10 percent of the LEL. You must determine the LEL using process instrumentation or portable measurement devices and follow procedures for calibration and maintenance according to manufacturer's specifications.

(1) Remove liquids from the storage tank as much as practicable.

(2) Comply with one of the following:

(i) Reduce emissions of total organic HAP by venting emissions through a closed vent system to a flare.

(ii) Reduce emissions of total organic HAP by 95 weight-percent by venting emissions through a closed vent system to any combination of non-flare control devices.

(iii) Reduce emissions of total organic HAP by routing emissions to a fuel gas system or process and meet the requirements specified in § 63.982(d) and the applicable requirements in § 63.2450(e)(4).

(3) Maintain records necessary to demonstrate compliance with the requirements in § 63.2450(u) including, if appropriate, records of existing standard site procedures used to empty and degas (deinventory) equipment for safety purposes.

[68 FR 63888, Nov. 10, 2003, as amended at 70 FR 38559, July 1, 2005; 71 FR 40335, July 14, 2006; 85 FR 49140, Aug. 12, 2020]

sfrattini on LAPJZKW1R2 with $$_JOB
VerDate Sep<11>2014 09:16 Apr 04, 2023 Jkt 256165 PO 00000 Frm 00456 Fmt 8010 Sfmt 8010 Q:\40\256165.XXX PC31

§ 63.2475 What requirements must I meet for transfer racks?

(a) You must comply with each emission limit and work practice standard in Table 5 to this subpart that applies to your transfer racks, and you must meet each applicable requirement in paragraph (b) of this section.

(b) When the term ''high throughput transfer rack'' is used in subpart SS of this part 63, the term ''Group 1 transfer rack,'' as defined in § 63.2550, applies for the purposes of this subpart.

[68 FR 63888, Nov. 10, 2003, as amended at 71 FR 40335, July 14, 2006; 85 FR 49141, Aug. 12, 2020]

§ 63.2480 What requirements must I meet for equipment leaks?

(a) You must meet each requirement in Table 6 to this subpart that applies to your equipment leaks, except as specified in paragraphs (b) through (f) of this section. For each light liquid pump, valve, and connector in ethylene oxide service as defined in § 63.2550(i), you must also meet the applicable requirements specified in §§ 63.2492 and 63.2493(d) and (e).

(b) Except as specified in paragraphs (b)(6) and (7) of this section, if you comply with either subpart H or UU of this part, you may elect to comply with the provisions in paragraphs (b)(1) through (5) of this section as an alternative to the referenced provisions in subpart H or UU of this part.

(1) The requirements for pressure testing in § 63.178(b) or § 63.1036(b) may be applied to all processes, not just batch processes.

(2) For the purposes of this subpart, pressure testing for leaks in accordance with § 63.178(b) or § 63.1036(b) is not required after reconfiguration of an equipment train if flexible hose connections are the only disturbed equipment.

(3) For an existing source, you are not required to develop an initial list of identification numbers for connectors as would otherwise be required under § 63.1022(b)(1) or § 63.181(b)(1)(i).

(4) For connectors in gas/vapor and light liquid service at an existing source, you may elect to comply with the requirements in § 63.169 or § 63.1029 for connectors in heavy liquid service, including all associated recordkeeping and reporting requirements, rather than the requirements of § 63.174 or § 63.1027.

(5) Except as specified in paragraph (b)(6) of this section, for pumps in light liquid service in an MCPU that has no continuous process vents and is part of an existing source, you may elect to consider the leak definition that defines a leak to be 10,000 parts per million (ppm) or greater as an alternative to the values specified in § 63.1026(b)(2)(i) through (iii) or § 63.163(b)(2).

(6) Beginning no later than the compliance dates specified in § 63.2445(h), paragraph (b)(5) of this section no longer applies.

(7) For each piece of equipment that is subject to Table 6 to this subpart and is also subject to periodic monitoring with EPA Method 21 of 40 CFR part 60, appendix A–7, and is added to an affected source after December 17, 2019, or replaces equipment at an affected source after December 17, 2019, you must initially monitor for leaks within 30 days after August 12, 2020, or initial startup of the equipment, whichever is later. Equipment that is designated as unsafe- or difficult-to-monitor is not subject to this paragraph (b)(7).

(c) Except as specified in paragraphs (c)(10) and (11) of this section, if you comply with 40 CFR part 65, subpart F, you may elect to comply with the provisions in paragraphs (c)(1) through (9) of this section as an alternative to the referenced provisions in 40 CFR part 65, subpart F.

(1) The requirements for pressure testing in § 65.117(b) may be applied to all processes, not just batch processes.

(2) For the purposes of this subpart, pressure testing for leaks in accordance with § 65.117(b) is not required after reconfiguration of an equipment train if flexible hose connections are the only disturbed equipment.

(3) For an existing source, you are not required to develop an initial list of identification numbers for connectors as would otherwise be required under § 65.103(b)(1).

(4) You may elect to comply with the monitoring and repair requirements specified in § 65.108(e)(3) as an alternative to the requirements specified in

sfrattini on LAPJZKW1R2 with $$_JOB
VerDate Sep<11>2014 09:16 Apr 04, 2023 Jkt 256165 PO 00000 Frm 00457 Fmt 8010 Sfmt 8010 Q:\40\256165.XXX PC31

§ 65.108(a) through (d) for any connectors at your affected source.

(5) Except as specified in paragraph (c)(10) of this section, for pumps in light liquid service in an MCPU that has no continuous process vents and is part of an existing source, you may elect to consider the leak definition that defines a leak to be 10,000 ppm or greater as an alternative to the values specified in § 65.107(b)(2)(i) through (iii) of this chapter.

(6) When 40 CFR part 65, subpart F refers to the implementation date specified in § 65.1(f), it means the compliance date specified in § 63.2445.

(7) When §§ 65.105(f) and 65.117(d)(3) refer to § 65.4, it means § 63.2525.

(8) When § 65.120(a) refers to § 65.5(d), it means § 63.2515.

(9) When § 65.120(b) refers to § 65.5(e), it means § 63.2520.

(10) Beginning no later than the compliance dates specified in § 63.2445(h), paragraph (c)(5) of this section no longer applies.

(11) For each piece of equipment that is subject to Table 6 to this subpart and is also subject to periodic monitoring with EPA Method 21 of 40 CFR part 60, appendix A–7, and is added to an affected source after December 17, 2019, or replaces equipment at an affected source after December 17, 2019, you must initially monitor for leaks within 30 days after August 12, 2020, or initial startup of the equipment, whichever is later. Equipment that is designated as unsafe- or difficult-to-monitor is not subject to this paragraph (c)(11).

(d) The provisions of this section do not apply to bench-scale processes, regardless of whether the processes are located at the same plant site as a process subject to the provisions of this subpart.

(e) Beginning no later than the compliance dates specified in § 63.2445(g), except as specified in paragraph (e)(4) of this section, you must comply with the requirements specified in paragraphs (e)(1) and (2) of this section for pressure relief devices, such as relief valves or rupture disks, in organic HAP gas or vapor service instead of the pressure relief device requirements of § 63.1030 of subpart UU, § 63.165 of subpart H, or § 65.111 of this chapter. Except as specified in paragraphs (e)(4) and (5) of this section, you must also comply with the requirements specified in paragraphs (e)(3), (6), (7), and (8) of this section for all pressure relief devices in organic HAP service.

(1) *Operating requirements.* Except during a pressure release, operate each pressure relief device in organic HAP gas or vapor service with an instrument reading of less than 500 ppm above background as measured by the method in § 63.1023(b) of subpart UU, § 63.180(c) of subpart H, or § 65.104(b) of this chapter.

(2) *Pressure release requirements.* For pressure relief devices in organic HAP gas or vapor service, you must comply with the applicable requirements paragraphs (e)(2)(i) through (iii) of this section following a pressure release.

(i) If the pressure relief device does not consist of or include a rupture disk, conduct instrument monitoring, as specified in § 63.1023(b) of subpart UU, § 63.180(c) of subpart H, or § 65.104(b) of this chapter, no later than 5 calendar days after the pressure relief device returns to organic HAP gas or vapor service following a pressure release to verify that the pressure relief device is operating with an instrument reading of less than 500 ppm.

(ii) If the pressure relief device includes a rupture disk, either comply with the requirements in paragraph (e)(2)(i) of this section (and do not replace the rupture disk) or install a replacement disk as soon as practicable after a pressure release, but no later than 5 calendar days after the pressure release. You must conduct instrument monitoring, as specified in § 63.1023(b) of subpart UU, § 63.180(c) of subpart H, or § 65.104(b) of this chapter, no later than 5 calendar days after the pressure relief device returns to organic HAP gas or vapor service following a pressure release to verify that the pressure relief device is operating with an instrument reading of less than 500 ppm.

(iii) If the pressure relief device consists only of a rupture disk, install a replacement disk as soon as practicable after a pressure release, but no later than 5 calendar days after the pressure release. You must not initiate startup of the equipment served by the rupture disk until the rupture disc is

sfrattini on LAPJZKW1R2 with $$_JOB
VerDate Sep<11>2014 09:16 Apr 04, 2023 Jkt 256165 PO 00000 Frm 00458 Fmt 8010 Sfmt 8010 Q:\40\256165.XXX PC31

replaced. You must conduct instrument monitoring, as specified in §63.1023(b) of subpart UU, §63.180(c) of subpart H, or §65.104(b) of this chapter, no later than 5 calendar days after the pressure relief device returns to organic HAP gas or vapor service following a pressure release to verify that the pressure relief device is operating with an instrument reading of less than 500 ppm.

(3) *Pressure release management.* Except as specified in paragraphs (e)(4) and (5) of this section, you must comply with the requirements specified in paragraphs (e)(3)(i) through (v) of this section for all pressure relief devices in organic HAP service.

(i) You must equip each affected pressure relief device with a device(s) or use a monitoring system that is capable of:

(A) Identifying the pressure release;

(B) Recording the time and duration of each pressure release; and

(C) Notifying operators immediately that a pressure release is occurring. The device or monitoring system must be either specific to the pressure relief device itself or must be associated with the process system or piping, sufficient to indicate a pressure release to the atmosphere. Examples of these types of devices and systems include, but are not limited to, a rupture disk indicator, magnetic sensor, motion detector on the pressure relief valve stem, flow monitor, or pressure monitor.

(ii) You must apply at least three redundant prevention measures to each affected pressure relief device and document these measures. Examples of prevention measures include:

(A) Flow, temperature, liquid level and pressure indicators with deadman switches, monitors, or automatic actuators. Independent, non-duplicative systems within this category count as separate redundant prevention measures.

(B) Documented routine inspection and maintenance programs and/or operator training (maintenance programs and operator training may count as only one redundant prevention measure).

(C) Inherently safer designs or safety instrumentation systems.

(D) Deluge systems.

(E) Staged relief system where the initial pressure relief device (with lower set release pressure) discharges to a flare or other closed vent system and control device.

(iii) If any affected pressure relief device releases to atmosphere as a result of a pressure release event, you must perform root cause analysis and corrective action analysis according to the requirement in paragraph (e)(6) of this section and implement corrective actions according to the requirements in paragraph (e)(7) of this section. You must also calculate the quantity of organic HAP released during each pressure release event and report this quantity as required in §63.2520(e)(15). Calculations may be based on data from the pressure relief device monitoring alone or in combination with process parameter monitoring data and process knowledge.

(iv) You must determine the total number of release events that occurred during the calendar year for each affected pressure relief device separately. You must also determine the total number of release events for each pressure relief device for which the root cause analysis concluded that the root cause was a *force majeure* event, as defined in §63.2550.

(v) Except for pressure relief devices described in paragraphs (e)(4) and (5) of this section, the following release events from an affected pressure relief device are a deviation of the pressure release management work practice standards.

(A) Any release event for which the root cause of the event was determined to be operator error or poor maintenance.

(B) A second release event not including *force majeure* events from a single pressure relief device in a 3 calendar year period for the same root cause for the same equipment.

(C) A third release event not including *force majeure* events from a single pressure relief device in a 3 calendar year period for any reason.

(4) *Pressure relief devices routed to a control device, process, fuel gas system, or drain system.* (i) If all releases and potential leaks from a pressure relief device are routed through a closed vent system to a control device, back into

sfrattini on LAPJZKW1R2 with $$_JOB
VerDate Sep<11>2014 09:16 Apr 04, 2023 Jkt 256165 PO 00000 Frm 00459 Fmt 8010 Sfmt 8010 Q:\40\256165.XXX PC31

the process, to the fuel gas system, or to a drain system, then you are not required to comply with paragraph (e)(1), (2), or (3) of this section.

(ii) Before the compliance dates specified in § 63.2445(g), both the closed vent system and control device (if applicable) referenced in paragraph (e)(4)(i) of this section must meet the applicable requirements specified in § 63.982(b) and (c)(2) of subpart SS. Beginning no later than the compliance dates specified in § 63.2445(g), both the closed vent system and control device (if applicable) referenced in paragraph (e)(4)(i) of this section must meet the applicable requirements specified in §§ 63.982(c)(2), 63.983, and 63.2450(e)(4) through (6).

(iii) The drain system (if applicable) referenced in paragraph (e)(4)(i) must meet the applicable requirements specified in § 63.2485(e).

(5) *Pressure relief devices exempted from pressure release management requirements.* The following types of pressure relief devices are not subject to the pressure release management requirements in paragraph (e)(3) of this section.

(i) Pressure relief devices in heavy liquid service, as defined in § 63.1020 of subpart UU or § 65.103(f) of this chapter.

(ii) Thermal expansion relief valves.

(iii) Pressure relief devices on mobile equipment.

(iv) Pilot-operated pressure relief devices where the primary release valve is routed through a closed vent system to a control device or back into the process, to the fuel gas system, or to a drain system.

(v) Balanced bellows pressure relief devices where the primary release valve is routed through a closed vent system to a control device or back into the process, to the fuel gas system, or to a drain system.

(6) *Root cause analysis and corrective action analysis.* A root cause analysis and corrective action analysis must be completed as soon as possible, but no later than 45 days after a release event. Special circumstances affecting the number of root cause analyses and/or corrective action analyses are provided in paragraphs (e)(6)(i) through (iii) of this section.

(i) You may conduct a single root cause analysis and corrective action analysis for a single emergency event that causes two or more pressure relief devices installed on the same equipment to release.

(ii) You may conduct a single root cause analysis and corrective action analysis for a single emergency event that causes two or more pressure relief devices to release, regardless of the equipment served, if the root cause is reasonably expected to be a *force majeure* event, as defined in § 63.2550.

(iii) Except as provided in paragraphs (e)(6)(i) and (ii) of this section, if more than one pressure relief device has a release during the same time period, an initial root cause analysis must be conducted separately for each pressure relief device that had a release. If the initial root cause analysis indicates that the release events have the same root cause(s), the initially separate root cause analyses may be recorded as a single root cause analysis and a single corrective action analysis may be conducted.

(7) *Corrective action implementation.* You must conduct a root cause analysis and corrective action analysis as specified in paragraphs (e)(3)(iii) and (e)(6) of this section, and you must implement the corrective action(s) identified in the corrective action analysis in accordance with the applicable requirements in paragraphs (e)(7)(i) through (iii) of this section.

(i) All corrective action(s) must be implemented within 45 days of the event for which the root cause and corrective action analyses were required or as soon thereafter as practicable. If you conclude that no corrective action should be implemented, you must record and explain the basis for that conclusion no later than 45 days following the event.

(ii) For corrective actions that cannot be fully implemented within 45 days following the event for which the root cause and corrective action analyses were required, you must develop an implementation schedule to complete the corrective action(s) as soon as practicable.

(iii) No later than 45 days following the event for which a root cause and corrective action analyses were required, you must record the corrective action(s) completed to date, and, for

sfrattini on LAPJZKW1R2 with $$_JOB
VerDate Sep<11>2014 09:16 Apr 04, 2023 Jkt 256165 PO 00000 Frm 00460 Fmt 8010 Sfmt 8010 Q:\40\256165.XXX PC31

action(s) not already completed, a schedule for implementation, including proposed commencement and completion dates.

(8) *Flowing pilot-operated pressure relief devices*. For affected sources that commenced construction or reconstruction on or before December 17, 2019, you are prohibited from installing a flowing pilot-operated pressure relief device or replacing any pressure relief device with a flowing pilot-operated pressure relief device after August 12, 2023. For affected sources that commenced construction or reconstruction after December 17, 2019, you are prohibited from installing and operating flowing pilot-operated pressure relief devices. For purpose of compliance with this paragraph (e)(8), a flowing pilot-operated pressure relief device means the type of pilot-operated pressure relief device where the pilot discharge vent continuously releases emissions to the atmosphere when the pressure relief device is actuated.

(f) Beginning no later than the compliance dates specified in §63.2445(g), the referenced provisions specified in paragraphs (f)(1) through (18) of this section do not apply when demonstrating compliance with this section.

(1) Section 63.163(c)(3) of subpart H.

(2) Section 63.172(j)(3) of subpart H.

(3) The second sentence of §63.181(d)(5)(i) of subpart H.

(4) The phrase ''may be included as part of the startup, shutdown, and malfunction plan, as required by the referencing subpart for the source, or'' from §63.1024(f)(4)(i) of subpart UU.

(5) Section 63.1026(b)(3) of subpart UU.

(6) The phrase ''(except periods of startup, shutdown, or malfunction)'' from §63.1026(e)(1)(ii)(A) of subpart UU.

(7) The phrase ''(except during periods of startup, shutdown, or malfunction)'' from §63.1028(e)(1)(i)(A) of subpart UU.

(8) The phrase ''(except during periods of startup, shutdown, or malfunction)'' from §63.1031(b)(1) of subpart UU.

(9) The second sentence of §65.105(f)(4)(i) of this chapter.

(10) Section 65.107(b)(3) of this chapter.

(11) The phrase ''(except periods of start-up, shutdown, or malfunction)'' from §65.107(e)(1)(ii)(A) of this chapter.

(12) The phrase ''(except during periods of start-up, shutdown, or malfunction)'' from §65.109(e)(1)(i)(A) of this chapter.

(13) The phrase ''(except during periods of start-up, shutdown, or malfunction)'' from §65.112(b)(1) of this chapter.

(14) The last sentence of §65.115(b)(1) of this chapter.

(15) The last sentence of §65.115(b)(2) of this chapter.

(16) The phrase ''Except for pressure relief devices needed for safety purposes, low leg drains, high point bleeds, analyzer vents, and open-ended valves or lines'' in §65.143(a)(3) of this chapter.

(17) For flares complying with §63.2450(e)(5), the following provisions do not apply:

(i) Section 63.172(d) of subpart H;

(ii) Section 63.180(e) of subpart H;

(iii) Section 63.181(g)(1)(iii) of subpart H;

(iv) The phrase ''including periods when a flare pilot light system does not have a flame'' from §63.181(g)(2)(i) of subpart H;

(v) Section 63.1034(b)(2)(iii) of subpart UU; and

(vi) Section 65.115(b)(2) of this chapter.

(18) For pressure relief devices complying with §63.2480(e), the following provisions are modified as follows:

(i) In the introductory text of §63.180(c), replace the reference to §63.165(a) with §63.2480(e)(1).

(ii) In §63.181(b)(2)(i), replace the reference to §63.165(c) with §63.2480(e)(4).

(iii) In §63.181(b)(2)(i), replace the reference to §63.165(a) with §63.2480(e)(1).

(iv) In §63.181(b)(3)(ii), replace the reference to §63.165(d) with §63.2480(e)(2)(ii) and (iii).

(v) In §63.181(f), replace the reference to §63.165(a) and (b) with §63.2480(e)(1) and (2).

(vi) The information required to be reported under §63.182(d)(2)(xiv) is now required to be reported under §63.2520(e)(15)(i) through (iii).

(vii) The reference to §63.1030(b) in §63.1021(a) no longer applies.

(viii) In §63.1022(b)(2), replace the reference to §63.1030(d) with §63.2480(e)(4).

sfrattini on LAPJZKW1R2 with $$_JOB
VerDate Sep<11>2014 09:16 Apr 04, 2023 Jkt 256165 PO 00000 Frm 00461 Fmt 8010 Sfmt 8010 Q:\40\256165.XXX PC31

(ix) In § 63.1022(b)(3), replace the reference to § 63.1030(e) with § 63.2480(e)(2)(ii).

(x) The reference to § 63.1030(c) in § 63.1022(a)(1)(v) no longer applies. Instead comply with the § 63.2480(e)(1) and (2).

(xi) In § 63.1023(c) introductory text and (c)(4), replace the reference to § 63.1030(b) with § 63.2480(e)(1).

(xii) In § 63.1038(c) replace the reference to § 63.1030(c)(3) with § 63.2480(e)(2).

(xiii) The information required to be reported under § 63.1039(b)(4) is now required to be reported under § 63.2520(e)(15)(i) and (ii).

(xiv) The reference to § 65.111(b) of this chapter in § 65.102(a) of this chapter no longer applies.

(xv) In § 65.103(b)(3) of this chapter, replace the reference to § 65.111(d) with § 63.2480(e)(4).

(xvi) In § 65.103(b)(4) of this chapter, replace the reference to § 63.111(e) with § 63.2480(e)(2)(ii).

(xvii) The reference to § 65.111(b) and (c) of this chapter in § 65.104(a)(1)(iv) of this chapter no longer applies. Instead comply with § 63.2480(e)(1) and (2).

(xviii) In § 65.104(c) introductory text and (c)(4) of this chapter, replace the reference to § 63.111(b) with § 63.2480(e)(1).

(xix) In § 65.119(c)(5) of this chapter, replace the reference to § 65.111(c)(3) with § 63.2480(e)(2) and replace the reference to § 65.111(e) with § 63.2480(e)(2)(ii) and (iii).

(xx) The information required to be reported under § 65.120(b)(4) of this chapter is now required to be reported under § 63.2520(e)(15)(i) and (ii).

[71 FR 40335, July 14, 2006, as amended at 85 FR 49141, Aug. 12, 2020]

§ 63.2485 What requirements must I meet for wastewater streams and liquid streams in open systems within an MCPU?

(a) *General.* You must meet each requirement in Table 7 to this subpart that applies to your wastewater streams and liquid streams in open systems within an MCPU, except as specified in paragraphs (b) through (q) of this section.

(b) *Wastewater HAP.* Where § 63.105 and §§ 63.132 through 63.148 refer to compounds in table 9 of subpart G of this part 63, the compounds in tables 8 and 9 to this subpart apply for the purposes of this subpart.

(c) *Group 1 wastewater.* Section 63.132(c)(1) (i) and (ii) do not apply. For the purposes of this subpart, a process wastewater stream is Group 1 for compounds in tables 8 and 9 to this subpart if any of the conditions specified in paragraphs (c) (1) through (3) of this section are met.

(1) The total annual average concentration of compounds in table 8 to this subpart is greater than or equal to 10,000 ppmw at any flowrate, and the total annual load of compounds in table 8 to this subpart is greater than or equal to 200 lb/yr.

(2) The total annual average concentration of compounds in table 8 to this subpart is greater than or equal to 1,000 ppmw, and the annual average flowrate is greater than or equal to 1 l/min.

(3) The combined total annual average concentration of compounds in tables 8 and 9 to this subpart is greater than or equal to 30,000 ppmw, and the combined total annual load of compounds in tables 8 and 9 to this subpart is greater than or equal to 1 tpy.

(d) *Wastewater tank requirements.* (1) When §§ 63.133 and 63.147 reference floating roof requirements in §§ 63.119 and 63.120, the corresponding requirements in subpart WW of this part 63 may be applied for the purposes of this subpart.

(2) When § 63.133(a) refers to table 10 of subpart G of this part 63, the maximum true vapor pressure in the table shall be limited to the HAP listed in tables 8 and 9 of this subpart FFFF.

(3) For the purposes of this subpart, the requirements of § 63.133(a)(2) are satisfied by operating and maintaining a fixed roof if you demonstrate that the total soluble and partially soluble HAP emissions from the wastewater tank are no more than 5 percent higher than the emissions would be if the contents of the wastewater tank were not heated, treated by an exothermic reaction, or sparged.

(4) The emission limits specified in §§ 63.133(b)(2) and 63.139 for control devices used to control emissions from wastewater tanks do not apply during

sfrattini on LAPJZKW1R2 with $$_JOB
VerDate Sep<11>2014 09:16 Apr 04, 2023 Jkt 256165 PO 00000 Frm 00462 Fmt 8010 Sfmt 8010 Q:\40\256165.XXX PC31

periods of planned routine maintenance of the control device(s) of no more than 240 hr/yr. You may request an extension to a total of 360 hr/yr in accordance with the procedures specified in §63.2470(d).

(e) *Individual drain systems.* The provisions of §63.136(e)(3) apply except as specified in paragraph (e)(1) of this section.

(1) A sewer line connected to drains that are in compliance with §63.136(e)(1) may be vented to the atmosphere, provided that the sewer line entrance to the first downstream junction box is water sealed and the sewer line vent pipe is designed as specified in §63.136(e)(2)(ii)(A).

(2) [Reserved]

(f) *Closed-vent system requirements.* Except as specified in §63.2450(e)(6), when §63.148(k) refers to closed vent systems that are subject to the requirements of § 63.172, the requirements of either § 63.172 or §63.1034 apply for the purposes of this subpart.

(g) *Halogenated vent stream requirements.* For each halogenated vent stream from a Group 1 wastewater stream or residual removed from a Group 1 wastewater stream that is vented through a closed-vent system to a combustion device to reduce organic HAP emissions, you must meet the same emission limits as specified for batch process vents in item 2 of table 2 to this subpart.

(h) *Alternative test methods.* (1) As an alternative to the test methods specified in §63.144(b)(5)(i), you may use Method 8260 or 8270 as specified in §63.1257(b)(10)(iii).

(2) As an alternative to using the methods specified in §63.144(b)(5)(i), you may conduct wastewater analyses using Method 1666 or 1671 of 40 CFR part 136 and comply with the sampling protocol requirements specified in §63.144(b)(5)(ii). The validation requirements specified in §63.144(b)(5)(iii) do not apply if you use Method 1666 or 1671 of 40 CFR part 136.

(3) As an alternative to using Method 18 of 40 CFR part 60, as specified in §§63.139(c)(1)(ii) and 63.145(i)(2), you may elect to use Method 25A of 40 CFR part 60 as specified in §63.997.

(4) As an alternative to using EPA Method 624 of 40 CFR part 136, appendix A, as specified in §63.144(b)(5)(i)(C), you may use ASTM D5790–95 (Reapproved 2012) (incorporated by reference, see §63.14) for the analysis of total organic HAP in wastewater samples. If you choose to use ASTM D5790–95 (Reapproved 2012), then you must also use the sampling procedures of EPA Method 25D 40 CFR part 60, appendix A–7, or an equivalent method.

(i) *Offsite management and treatment option.* (1) If you ship wastewater to an offsite treatment facility that meets the requirements of §63.138(h), you may elect to document in your notification of compliance status report that the wastewater will be treated as hazardous waste at a facility that meets the requirements of §63.138(h) as an alternative to having the offsite facility submit the certification specified in §63.132(g)(2).

(2) As an alternative to the management and treatment options specified in §63.132(g)(2), any affected wastewater stream (or residual removed from an affected wastewater stream) with a total annual average concentration of compounds in Table 8 to this subpart less than 50 ppmw may be transferred offsite in accordance with paragraphs (i)(2) (i) and (ii) of this section.

(i) The transferee (or you) must demonstrate that less than 5 percent of the HAP in Table 9 to this subpart is emitted from the waste management units up to the activated sludge unit.

(ii) The transferee must treat the wastewater stream or residual in a biological treatment unit in accordance with the requirement in paragraph (i)(2)(iii) of this section and the requirements of §§63.138 and 63.145 and the requirements referenced therein.

(iii) Beginning no later than the compliance dates specified in §63.2445(g), the requirement of §63.145(a)(3) no longer applies. Instead, the transferee must comply with the conditions specified in §63.2450(g)(6).

(j) You must determine the annual average concentration and annual average flowrate for wastewater streams for each MCPU. The procedures for flexible operation units specified in §63.144 (b) and (c) do not apply for the purposes of this subpart.

sfrattini on LAPJZKW1R2 with $$_JOB
VerDate Sep<11>2014 09:16 Apr 04, 2023 Jkt 256165 PO 00000 Frm 00463 Fmt 8010 Sfmt 8010 Q:\40\256165.XXX PC31

(k) *Outlet concentration correction for supplemental gases.* The requirement to correct outlet concentrations from combustion devices to 3-percent oxygen in §§ 63.139(c)(1)(ii) and 63.145(i)(6) applies only if supplemental gases are combined with a vent stream from a Group 1 wastewater stream. If emissions are controlled with a vapor recovery system as specified in § 63.139(c)(2), you must correct for supplemental gases as specified in § 63.2460(c)(6).

(l) *Requirements for liquid streams in open systems.* (1) References in § 63.149 to § 63.100(b) mean § 63.2435(b) for the purposes of this subpart.

(2) When § 63.149(e) refers to 40 CFR 63.100(l) (1) or (2), § 63.2445(a) applies for the purposes of this subpart.

(3) When § 63.149 uses the term ''chemical manufacturing process unit,'' the term ''MCPU'' applies for the purposes of this subpart.

(4) When § 63.149(e)(1) refers to characteristics of water that contain compounds in Table 9 to 40 CFR part 63, subpart G, the characteristics specified in paragraphs (c) (1) through (3) of this section apply for the purposes of this subpart.

(5) When § 63.149(e)(2) refers to characteristics of water that contain compounds in Table 9 to 40 CFR part 63, subpart G, the characteristics specified in paragraph (c)(2) of this section apply for the purposes of this subpart.

(m) When § 63.132(f) refers to ''a concentration of greater than 10,000 ppmw of table 9 compounds,'' the phrase ''a concentration of greater than 30,000 ppmw of total partially soluble HAP (PSHAP) and soluble HAP (SHAP) or greater than 10,000 ppmw of PSHAP'' shall apply for the purposes of this subpart.

(n) *Alternative requirements for wastewater that is Group 1 for soluble HAP only.* The option specified in this paragraph (n) applies to wastewater that is Group 1 for soluble HAP in accordance with paragraph (c)(3) of this section and is discharged to biological treatment. Except as provided in paragraph (n)(4) of this section, this option does not apply to wastewater that is Group 1 for partially soluble HAP in accordance with paragraph (c)(1), (c)(2), or (c)(4) of this section. For wastewater that is Group 1 for SHAP, you need not comply with §§ 63.133 through 63.137 for any equalization unit, neutralization unit, and/or clarifier prior to the activated sludge unit, and you need not comply with the venting requirements in § 63.136(e)(2)(ii)(A) for lift stations with a volume larger than 10,000 gal, provided you comply with the requirements specified in paragraphs (n)(1) through (3) of this section and all otherwise applicable requirements specified in table 7 to this subpart. For this option, the treatment requirements in § 63.138 and the performance testing requirements in § 63.145 do not apply to the biological treatment unit, except as specified in paragraphs (n)(2)(i) through (iv) of this section.

(1) Wastewater must be hard-piped between the equalization unit, clarifier, and activated sludge unit. This requirement does not apply to the transfer between any of these types of units that are part of the same structure and one unit overflows into the next.

(2) Calculate the destruction efficiency of the biological treatment unit using Equation 1 to this paragraph (n)(2) in accordance with the procedures described in paragraphs (n)(2)(i) through (viii) of this section. You have demonstrated initial compliance if E is greater than or equal to 90 percent.

$$E = \frac{\left(QMW_a - QMG_e - QMG_n - QMG_c\right)\left(F_{bio}\right)}{QMW_a} \times 100 \qquad \text{(Eq. 1)}$$

Where:

E = destruction efficiency of total PSHAP and SHAP for the biological treatment unit including the equalization unit, neutralization unit, and/or clarifier, percent;

QMW_a = mass flow rate of total PSHAP and SHAP compounds entering the equalization unit (or whichever of the three

sfrattini on LAPJZKW1R2 with $$_JOB
VerDate Sep<11>2014 09:16 Apr 04, 2023 Jkt 256165 PO 00000 Frm 00464 Fmt 8010 Sfmt 8010 Q:\40\256165.XXX PC31
ER14JY06.031

types of units is first), kilograms per hour (kg/hr);

QMG_e = mass flow rate of total PSHAP and SHAP compounds emitted from the equalization unit, kg/hr;

QMG_n = mass flow rate of total PSHAP and SHAP compounds emitted from the neutralization unit, kg/hr;

QMG_c = mass flow rate of total PSHAP and SHAP compounds emitted from the clarifier, kg/hr

F_{bio} = site-specific fraction of PSHAP and SHAP compounds biodegraded in the biological treatment unit.

(i) Include all PSHAP and SHAP compounds in both Group 1 and Group 2 wastewater streams from all MCPU, except you may exclude any compounds that meet the criteria specified in §63.145(a)(6)(ii) or (iii).

(ii) Except as specified in paragraph (n)(2)(vii) of this section, conduct the demonstration under representative process unit and treatment unit operating conditions in accordance with § 63.145(a)(3) and (4).

(iii) Determine PSHAP and SHAP concentrations and the total wastewater flow rate at the inlet to the equalization unit in accordance with §63.145(f)(1) and (2). References in §63.145(f)(1) and (2) to required mass removal and actual mass removal do not apply for the purposes of this section.

(iv) Determine F_{bio} for the activated sludge unit as specified in §63.145(h), except as specified in paragraph (n)(2)(iv)(A) or paragraph (n)(2)(iv)(B) of this section.

(A) If the biological treatment process meets both of the requirements specified in §63.145(h)(1)(i) and (ii), you may elect to replace the F_{bio} term in Equation 1 to paragraph (n)(2) of this section with the numeral ''1.''

(B) You may elect to assume f_{bio} is zero for any compounds on List 2 of table 36 in subpart G.

(v) Determine QMG_e, QMG_n, and QMG_c using EPA's WATER9 model or the most recent update to this model, and conduct testing or use other procedures to validate the modeling results.

(vi) Submit the data and results of your demonstration, including both a description of and the results of your WATER9 modeling validation procedures, in your notification of compliance status report as specified in §63.2520(d)(2)(ii).

(vii) Beginning no later than the compliance dates specified in §63.2445(g), the requirement of §63.145(a)(3) no longer applies. Instead, you must comply with the conditions specified in §63.2450(g)(6).

(3) As an alternative to the venting requirements in §63.136(e)(2)(ii)(A), a lift station with a volume larger than 10,000 gal may have openings necessary for proper venting of the lift station. The size and other design characteristics of these openings may be established based on manufacturer recommendations or engineering judgment for venting under normal operating conditions. You must describe the design of such openings and your supporting calculations and other rationale in your notification of compliance status report.

(4) For any wastewater streams that are Group 1 for both PSHAP and SHAP, you may elect to meet the requirements specified in Table 7 to this subpart for the PSHAP and then comply with paragraphs (n)(1) through (3) of this section for the SHAP in the wastewater system. You may determine the SHAP mass removal rate, in kg/hr, in treatment units that are used to meet the requirements for PSHAP and add this amount to both the numerator and denominator in Equation 1 to paragraph (n)(2) of this section.

(o) *Compliance records.* Except as specified in paragraph (p) of this section, for each CPMS used to monitor a nonflare control device for wastewater emissions, you must keep records as specified in §63.998(c)(1) in addition to the records required in §63.147(d).

(p) *Compliance records after date of compliance.* Beginning no later than the compliance dates specified in §63.2445(g), paragraph (o) of this section no longer applies. Instead, for each CPMS used to monitor a nonflare control device for wastewater emissions, you must keep records as specified in §63.998(c)(1) in addition to the records required in §63.147(d), except that the provisions of §63.998(c)(1)(ii)(D), (E), (F), and (G) do not apply.

(q) *Startup, shutdown, and malfunction referenced provisions.* Beginning no later than the compliance dates specified in §63.2445(g), the referenced provisions specified in paragraphs (q)(1) through

sfrattini on LAPJZKW1R2 with $$_JOB
VerDate Sep<11>2014 09:16 Apr 04, 2023 Jkt 256165 PO 00000 Frm 00465 Fmt 8010 Sfmt 8010 Q:\40\256165.XXX PC31

(5) of this section do not apply when demonstrating compliance with this section.

(1) Section 63.105(d) of subpart F and the phrase ''as part of the start-up, shutdown, and malfunction plan required under § 63.6(e)(3) of subpart A of this part'' from § 63.105(e) of subpart F.

(2) Section 63.132(b)(3)(i)(B) of subpart G.

(3) The phrase ''or startup/shutdown/malfunction'' in § 63.132(f)(2) of subpart G.

(4) Section 63.148(f)(3) of subpart G.

(5) For flares complying with § 63.2450(e)(5), the following provisions do not apply:

(i) Section 63.139(c)(3) of subpart G;

(ii) Section 63.139(d)(3) of subpart G;

(iii) Section 63.145(j) of subpart G;

(iv) Section 63.146(b)(7)(i) of subpart G; and

(v) Section 63.147(d)(1) of subpart G.

[68 FR 63888, Nov. 10, 2003, as amended at 70 FR 38559, July 1, 2005; 71 FR 40335, July 14, 2006; 85 FR 49144, Aug. 12, 2020]

§ 63.2490 What requirements must I meet for heat exchange systems?

(a) You must comply with each requirement in Table 10 to this subpart that applies to your heat exchange systems, except as specified in paragraphs (b) through (d) of this section.

(b) Except as specified in paragraph (d) of this section, if you comply with the requirements of § 63.104 as specified in Table 10 to this subpart, then the phrase ''a chemical manufacturing process unit meeting the conditions of § 63.100 (b)(1) through (b)(3) of this subpart'' in § 63.104(a) means ''an MCPU meeting the conditions of § 63.2435'' for the purposes of this subpart.

(c) Except as specified in paragraph (d) of this section, if you comply with the requirements of § 63.104 as specified in Table 10 to this subpart, then the reference to ''§ 63.100(c)'' in § 63.104(a) does not apply for the purposes of this subpart.

(d) Unless one or more of the conditions specified in § 63.104(a)(1), (2), (5), and (6) are met, beginning no later than the compliance dates specified in § 63.2445(g), the requirements of § 63.104 as specified in Table 10 to this subpart and paragraphs (b) and (c) of this section no longer apply. Instead, you must monitor the cooling water for the presence of total strippable hydrocarbons that indicate a leak according to paragraph (d)(1) of this section, and if you detect a leak, then you must repair it according to paragraphs (d)(2) and (3) of this section, unless repair is delayed according to paragraph (d)(4) of this section. At any time before the compliance dates specified in § 63.2445(g), you may choose to comply with the requirements in this paragraph (d) in lieu of the requirements of § 63.104 as specified in Table 10 to this subpart and paragraphs (b) and (c) of this section. The requirements in this paragraph (d) do not apply to heat exchange systems that have a maximum cooling water flow rate of 10 gallons per minute or less.

(1) You must perform monitoring to identify leaks of total strippable hydrocarbons from each heat exchange system subject to the requirements of this subpart according to the procedures in paragraphs (d)(1)(i) through (v) of this section.

(i) *Monitoring locations for closed-loop recirculation heat exchange systems.* For each closed loop recirculating heat exchange system, you must collect and analyze a sample from the location(s) described in either paragraph (d)(1)(i)(A) or (B) of this section.

(A) Each cooling tower return line or any representative riser within the cooling tower prior to exposure to air for each heat exchange system.

(B) Selected heat exchanger exit line(s), so that each heat exchanger or group of heat exchangers within a heat exchange system is covered by the selected monitoring location(s).

(ii) *Monitoring locations for once-through heat exchange systems.* For each once-through heat exchange system, you must collect and analyze a sample from the location(s) described in paragraph (d)(1)(ii)(A) of this section. You may also elect to collect and analyze an additional sample from the location(s) described in paragraph (d)(1)(ii)(B) of this section.

(A) Selected heat exchanger exit line(s), so that each heat exchanger or group of heat exchangers within a heat exchange system is covered by the selected monitoring location(s). The selected monitoring location may be at a

sfrattini on LAPJZKW1R2 with $$_JOB
VerDate Sep<11>2014 09:16 Apr 04, 2023 Jkt 256165 PO 00000 Frm 00466 Fmt 8010 Sfmt 8010 Q:\40\256165.XXX PC31

point where discharges from multiple heat exchange systems are combined provided that the combined cooling water flow rate at the monitoring location does not exceed 40,000 gallons per minute.

(B) The inlet water feed line for a once-through heat exchange system prior to any heat exchanger. If multiple heat exchange systems use the same water feed (*i.e.*, inlet water from the same primary water source), you may monitor at one representative location and use the monitoring results for that sampling location for all heat exchange systems that use that same water feed.

(iii) *Monitoring method*. If you comply with the total strippable hydrocarbon concentration leak action level as specified in paragraph (d)(1)(iv) of this section, you must comply with the requirements in paragraph (d)(1)(iii)(A) of this section. If you comply with the total hydrocarbon mass emissions rate leak action level as specified in paragraph (d)(1)(iv) of this section, you must comply with the requirements in paragraphs (d)(1)(iii)(A) and (B) of this section.

(A) You must determine the total strippable hydrocarbon concentration (in parts per million by volume (ppmv) as methane) at each monitoring location using the ''Air Stripping Method (Modified El Paso Method) for Determination of Volatile Organic Compound Emissions from Water Sources'' (incorporated by reference—see §63.14) using a flame ionization detector (FID) analyzer for on-site determination as described in Section 6.1 of the Modified El Paso Method.

(B) You must convert the total strippable hydrocarbon concentration (in ppmv as methane) to a total hydrocarbon mass emissions rate (as methane) using the calculations in Section 7.0 of ''Air Stripping Method (Modified El Paso Method) for Determination of Volatile Organic Compound Emissions from Water Sources'' (incorporated by reference—see §63.14).

(iv) *Monitoring frequency and leak action level*. For each heat exchange system, you must initially monitor monthly for 6-months beginning upon startup and monitor quarterly thereafter using a leak action level defined as a total strippable hydrocarbon concentration (as methane) in the stripping gas of 6.2 ppmv or, for heat exchange systems with a recirculation rate of 10,000 gallons per minute or less, you may monitor quarterly using a leak action level defined as a total hydrocarbon mass emissions rate from the heat exchange system (as methane) of 0.18 kg/hr. If a leak is detected as specified in paragraph (d)(1)(v) of this section, then you must monitor monthly until the leak has been repaired according to the requirements in paragraph (d)(2) or (3) of this section. Once the leak has been repaired according to the requirements in paragraph (d)(2) or (3) of this section, quarterly monitoring for the heat exchange system may resume. The monitoring frequencies specified in this paragraph (d)(1)(iv) also apply to the inlet water feed line for a once-through heat exchange system, if monitoring of the inlet water feed is elected as provided in paragraph (d)(1)(ii)(B) of this section.

(v) *Leak definition*. A leak is defined as described in paragraph (d)(1)(v)(A) or (B) of this section, as applicable.

(A) For once-through heat exchange systems for which the inlet water feed is monitored as described in paragraph (d)(1)(ii)(B) of this section, a leak is detected if the difference in the measurement value of the sample taken from a location specified in paragraph (d)(1)(ii)(A) of this section and the measurement value of the corresponding sample taken from the location specified in paragraph (d)(1)(ii)(B) of this section equals or exceeds the leak action level.

(B) For all other heat exchange systems, a leak is detected if a measurement value of the sample taken from a location specified in paragraph (d)(1)(i)(A) or (B) or (d)(1)(ii)(A) of this section equals or exceeds the leak action level.

(2) If a leak is detected using the methods described in paragraph (d)(1) of this section, you must repair the leak to reduce the concentration or mass emissions rate to below the applicable leak action level as soon as practicable, but no later than 45 days after identifying the leak, except as specified in paragraph (d)(4) of this section.

sfrattini on LAPJZKW1R2 with $$_JOB
VerDate Sep<11>2014 09:16 Apr 04, 2023 Jkt 256165 PO 00000 Frm 00467 Fmt 8010 Sfmt 8010 Q:\40\256165.XXX PC31

Repair must include re-monitoring at the monitoring location where the leak was identified according to the method specified in paragraph (d)(1)(iii) of this section to verify that the total strippable hydrocarbon concentration or total hydrocarbon mass emissions rate is below the applicable leak action level. Repair may also include performing the additional monitoring in paragraph (d)(3) of this section to verify that the total strippable hydrocarbon concentration or total hydrocarbon mass emissions rate is below the applicable leak action level. Actions that can be taken to achieve repair include but are not limited to:

(i) Physical modifications to the leaking heat exchanger, such as welding the leak or replacing a tube;

(ii) Blocking the leaking tube within the heat exchanger;

(iii) Changing the pressure so that water flows into the process fluid;

(iv) Replacing the heat exchanger or heat exchanger bundle; or

(v) Isolating, bypassing, or otherwise removing the leaking heat exchanger from service until it is otherwise repaired.

(3) If you detect a leak when monitoring a cooling tower return line under paragraph (d)(1)(i)(A) of this section, you may conduct additional monitoring of each heat exchanger or group of heat exchangers associated with the heat exchange system for which the leak was detected, as provided in paragraph (d)(1)(i)(B) of this section. If no leaks are detected when monitoring according to the requirements of paragraph (d)(1)(i)(B) of this section, the heat exchange system is considered to have met the repair requirements through re-monitoring of the heat exchange system, as provided in paragraph (d)(2) of this section.

(4) You may delay repair when one of the conditions in paragraph (d)(4)(i) or (ii) of this section is met and the leak is less than the delay of repair action level specified in paragraph (d)(4)(iii) of this section. You must determine if a delay of repair is necessary as soon as practicable, but no later than 45 days after first identifying the leak.

(i) If the repair is technically infeasible without a shutdown and the total strippable hydrocarbon concentration or total hydrocarbon mass emissions rate is initially and remains less than the delay of repair action level for all monitoring periods during the delay of repair, then you may delay repair until the next scheduled shutdown of the heat exchange system. If, during subsequent monitoring, the delay of repair action level is exceeded, then you must repair the leak within 30 days of the monitoring event in which the leak was equal to or exceeded the delay of repair action level.

(ii) If the necessary equipment, parts, or personnel are not available and the total strippable hydrocarbon concentration or total hydrocarbon mass emissions rate is initially and remains less than the delay of repair action level for all monitoring periods during the delay of repair, then you may delay the repair for a maximum of 120 calendar days. You must demonstrate that the necessary equipment, parts, or personnel were not available. If, during subsequent monitoring, the delay of repair action level is exceeded, then you must repair the leak within 30 days of the monitoring event in which the leak was equal to or exceeded the delay of repair action level.

(iii) The delay of repair action level is a total strippable hydrocarbon concentration (as methane) in the stripping gas of 62 ppmv or, for heat exchange systems with a recirculation rate of 10,000 gallons per minute or less, the delay of repair action level is a total hydrocarbon mass emissions rate (as methane) or 1.8 kg/hr. The delay of repair action level is assessed as described in paragraph (d)(4)(iii)(A) or (B) of this section, as applicable.

(A) For once-through heat exchange systems for which the inlet water feed is monitored as described in paragraph (d)(1)(ii)(B) of this section, the delay of repair action level is exceeded if the difference in the measurement value of the sample taken from a location specified in paragraph (d)(1)(ii)(A) of this section and the measurement value of the corresponding sample taken from the location specified in paragraph (d)(1)(ii)(B) of this section equals or exceeds the delay of repair action level.

(B) For all other heat exchange systems, the delay of repair action level is exceeded if a measurement value of the

sfrattini on LAPJZKW1R2 with $$_JOB
VerDate Sep<11>2014 09:16 Apr 04, 2023 Jkt 256165 PO 00000 Frm 00468 Fmt 8010 Sfmt 8010 Q:\40\256165.XXX PC31

sample taken from a location specified in paragraph (d)(1)(i)(A) or (B) or (d)(1)(ii)(A) of this section equals or exceeds the delay of repair action level.

[85 FR 49145, Aug. 12, 2020]

§ 63.2492 How do I determine whether my process vent, storage tank, or equipment is in ethylene oxide service?

To determine if process vents, storage tanks, and equipment leaks are in ethylene oxide service as defined in § 63.2550(i), you must comply with the requirements in paragraphs (a) through (c) of this section, as applicable.

(a) For each batch process vent or continuous process vent stream, you must measure the flow rate and concentration of ethylene oxide of each process vent as specified in paragraphs (a)(1) through (5) of this section.

(1) Measurements must be made prior to any dilution of the vent streams.

(2) Measurements may be made on the combined vent streams at an MCPU or for each separate vent stream.

(3) Method 1 or 1A of 40 CFR part 60, appendix A–1, as appropriate, must be used for the selection of the sampling sites. For vents smaller than 0.10 meter in diameter, sample at one point at the center of the duct.

(4) The gas volumetric flow rate must be determined using Method 2, 2A, 2C, 2D, 2F, or 2G of 40 CFR part 60, appendices A–1 and A–2, as appropriate.

(5) The concentration of ethylene oxide must be determined using Method 18 of 40 CFR part 60, appendix A–6, or Method 320 of appendix A to this part.

(b) For storage tanks, you must measure the concentration of ethylene oxide of the fluid stored in the storage tanks using Method 624.1 of 40 CFR part 136, appendix A, or preparation by Method 5031 and analysis by Method 8260D (both incorporated by reference, see § 63.14) in the SW–846 Compendium. In lieu of preparation by SW–846 Method 5031, you may use SW–846 Method 5030B (incorporated by reference, see § 63.14), as long as: You do not use a preservative in the collected sample; you store the sample with minimal headspace as cold as possible and at least below 4 degrees C; and you analyze the sample as soon as possible, but in no case longer than 7 days from the time the sample was collected. If you are collecting a sample from a pressure vessel, you must maintain the sample under pressure both during and following sampling.

(c) For equipment leaks, you must comply with the requirements in paragraphs (c)(1) through (4) of this section.

(1) Each piece of equipment within an MCPU that can reasonably be expected to contain equipment in ethylene oxide service is presumed to be in ethylene oxide service unless you demonstrate that the piece of equipment is not in ethylene oxide service. For a piece of equipment to be considered not in ethylene oxide service, it must be determined that the percent ethylene oxide content of the process fluid that is contained in or contacts equipment can be reasonably expected to not exceed 0.1 percent by weight on an annual average basis. For purposes of determining the percent ethylene oxide content of the process fluid, you must use Method 18 of 40 CFR part 60, appendix A–6, for gaseous process fluid, and Method 624.1 of 40 CFR part 136, appendix A, or preparation by Method 5031 and analysis by Method 8260D (both incorporated by reference, see § 63.14) in the SW–846 Compendium for liquid process fluid. In lieu of preparation by SW–846 Method 5031, you may use SW–846 Method 5030B (incorporated by reference, see § 63.14), as long as: You do not use a preservative in the collected sample; you store the sample with minimal headspace as cold as possible and at least below 4 degrees C; and you analyze the sample as soon as possible, but in no case longer than 7 days from the time the sample was collected.

(2) Unless specified by the Administrator, you may use good engineering judgment rather than the procedures specified in paragraph (c)(1) of this section to determine that the percent ethylene oxide content of the process fluid that is contained in or contacts equipment does not exceed 0.1 percent by weight.

(3) You may revise your determination for whether a piece of equipment is in ethylene oxide service by following the procedures in paragraph

sfrattini on LAPJZKW1R2 with $$_JOB
VerDate Sep<11>2014 09:16 Apr 04, 2023 Jkt 256165 PO 00000 Frm 00469 Fmt 8010 Sfmt 8010 Q:\40\256165.XXX PC31

(c)(1) of this section, or by documenting that a change in the process or raw materials no longer causes the equipment to be in ethylene oxide service.

(4) Samples used in determining the ethylene oxide content must be representative of the process fluid that is contained in or contacts the equipment.

[85 FR 49146, Aug. 12, 2020]

§ 63.2493 What requirements must I meet for process vents, storage tanks, or equipment that are in ethylene oxide service?

This section applies beginning no later than the compliance dates specified in § 63.2445(i). In order to demonstrate compliance with the emission limits and work practice standards specified in Tables 1, 2, and 4 to this subpart for process vents and storage tanks in ethylene oxide service, you must meet the requirements specified in paragraphs (a) through (c) of this section. In order to demonstrate compliance with the requirements specified in Table 6 to this subpart for equipment in ethylene oxide service, you must meet the requirements specified in paragraphs (d) and (e) of this section.

(a) *Initial compliance.* For initial compliance, you must comply with paragraphs (a)(1) through (4) of this section, as applicable.

(1) If you choose to reduce emissions of ethylene oxide by venting emissions through a closed-vent system to a flare as specified in Table 1, 2, or 4 to this subpart, then you must comply with § 63.2450(e)(4) and (6) and the requirements in § 63.983, and you must conduct the initial visible emissions demonstration required by § 63.670(h) of subpart CC as specified in § 63.2450(e)(5).

(2) If you choose to reduce emissions of ethylene oxide by venting emissions through a closed-vent system to a nonflare control device that reduces ethylene oxide by greater than or equal to 99.9 percent by weight as specified in Table 1, 2, or 4 to this subpart, then you must comply with § 63.2450(e)(4) and (6) and the requirements in § 63.983, and you must comply with paragraphs (a)(2)(i) through (viii) of this section.

(i) Conduct an initial performance test of the control device that is used to comply with the percent reduction requirement at the inlet and outlet of the control device. For purposes of compliance with this paragraph (a)(2), you may not use a design evaluation.

(ii) Conduct the performance test according to the procedures in §§ 63.997 and 63.2450(g). Use Method 18 of 40 CFR part 60, appendix A–6, or Method 320 of appendix A to this part to determine the ethylene oxide concentration. Use Method 1 or 1A of 40 CFR part 60, appendix A–1, to select the sampling sites at each sampling location. Determine the gas volumetric flowrate using Method 2, 2A, 2C, or 2D of 40 CFR part 60, appendix A–2. Use Method 4 of 40 CFR part 60, appendix A–3, to convert the volumetric flowrate to a dry basis.

(iii) Calculate the mass emission rate of ethylene oxide entering the control device and exiting the control device using Equations 1 and 2 to this paragraph (a)(2)(iii).

$$E_{EtO,inlet} = K\ C_{EtO,inlet}\ M_{EtO}\ Q_{inlet} \quad \text{(Eq. 1)}$$

$$E_{EtO,outlet} = K\ C_{EtO,outlet}\ M_{EtO}\ Q_{outlet} \quad \text{(Eq. 2)}$$

Where:

$E_{EtO,inlet}$, $E_{EtO,outlet}$ = Mass rate of ethylene oxide at the inlet and outlet of the control device, respectively, kilogram per hour.

$C_{EtO,inlet}$, $C_{EtO,outlet}$ = Concentration of ethylene oxide in the gas stream at the inlet and outlet of the control device, respectively, dry basis, parts per million by volume.

M_{EtO} = Molecular weight of ethylene oxide, 44.05 grams per gram-mole.

Q_{inlet}, Q_{outlet} = Flow rate of the gas stream at the inlet and outlet of the control device, respectively, dry standard cubic meter per minute.

K = Constant, $2.494 \times 10-6$ (parts per million)-1 (gram-mole per standard cubic meter) (kilogram per gram) (minutes per hour), where standard temperature (gram-mole per standard cubic meter) is 20 °C.

(iv) Calculate the percent reduction from the control device using Equation 3 to this paragraph (a)(2)(iv). You have demonstrated initial compliance if the overall reduction of ethylene oxide is greater than or equal to 99.9 percent by weight.

$$\text{Percent reduction} = (E_{EtO,inlet} - E_{EtO,outlet})/E_{EtO,inlet} * 100 \quad \text{(Eq. 3)}$$

Where:

sfrattini on LAPJZKW1R2 with $$_JOB
VerDate Sep<11>2014 09:16 Apr 04, 2023 Jkt 256165 PO 00000 Frm 00470 Fmt 8010 Sfmt 8010 Q:\40\256165.XXX PC31

$E_{EtO,inlet}$, $E_{EtO,outlet}$ = Mass rate of ethylene oxide at the inlet and outlet of the control device, respectively, kilogram per hour, calculated using Equations 1 and 2 to paragraph (a)(2)(iii) of this section.

(v) If a new control device is installed, then conduct a performance test of the new device following the procedures in paragraphs (a)(2)(i) through (iv) of this section.

(vi) If you vent emissions through a closed-vent system to a scrubber, then you must establish operating parameter limits by monitoring the operating parameters specified in paragraphs (a)(2)(vi)(A) through (C) of this section during the performance test.

(A) Scrubber liquid-to-gas ratio (L/G), determined from the total scrubber liquid inlet flow rate and the exit gas flow rate. Determine the average L/G during the performance test as the average of the test run averages.

(B) Scrubber liquid pH of the liquid in the reactant tank. The pH may be measured at any point between the discharge from the scrubber column and the inlet to the reactant tank. Determine the average pH during the performance test as the average of the test run averages.

(C) Temperature of the water entering the scrubber column. The temperature may be measured at any point after the heat exchanger and prior to entering the top of the scrubber column. Determine the average inlet water temperature as the average of the test run averages.

(vii) If you vent emissions through a closed-vent system to a thermal oxidizer, then you must establish operating parameter limits by monitoring the operating parameters specified in paragraphs (a)(2)(vii)(A) and (B) of this section during the performance test.

(A) Combustion chamber temperature. Determine the average combustion chamber temperature during the performance test as the average of the test run averages.

(B) Flue gas flow rate. Determine the average flue gas flow rate during the performance test as the average of the test run averages.

(viii) If you vent emissions through a closed-vent system to a control device other than a flare, scrubber, or thermal oxidizer, then you must notify the Administrator of the operating parameters that you plan to monitor during the performance test prior to establishing operating parameter limits for the control device.

(3) If you choose to reduce emissions of ethylene oxide by venting emissions through a closed-vent system to a nonflare control device that reduces ethylene oxide to less than 1 ppmv as specified in Table 1, 2, or 4 to this subpart, then you must comply with §63.2450(e)(4) and (6) and the requirements in §63.983, and you must comply with either paragraph (a)(3)(i) or (ii) of this section.

(i) Install an FTIR CEMS meeting the requirements of Performance Specification 15 of 40 CFR part 60, appendix B, to continuously monitor the ethylene oxide concentration at the exit of the control device. Comply with the requirements specified in §63.2450(j) for your CEMS.

(ii) If you do not install a CEMS under paragraph (a)(3)(i) of this section, you must comply with paragraphs (a)(3)(ii)(A) through (C) of this section.

(A) Conduct an initial performance test of the control device that is used to comply with the concentration requirement at the outlet of the control device.

(B) Conduct the performance test according to the procedures in §§63.997 and 63.2450(g). Use Method 18 of 40 CFR part 60, appendix A–6, or Method 320 of appendix A to this part to determine the ethylene oxide concentration. You have demonstrated initial compliance if the ethylene oxide concentration is less than 1 ppmv.

(C) Comply with the requirements specified in paragraphs (a)(2)(v) through (viii) of this section, as applicable.

(4) If you choose to reduce emissions of ethylene oxide by venting emissions through a closed-vent system to a nonflare control device that reduces ethylene oxide to less than 5 pounds per year for all combined process vents as specified in Table 1 or 2 to this subpart, then you must comply with §63.2450(e)(4) and (6) and the requirements in §63.983, and you must comply with paragraphs (a)(4)(i) through (iv) of this section.

sfrattini on LAPJZKW1R2 with $$_JOB
VerDate Sep<11>2014 09:16 Apr 04, 2023 Jkt 256165 PO 00000 Frm 00471 Fmt 8010 Sfmt 8010 Q:\40\256165.XXX PC31

(i) Conduct an initial performance test of the control device that is used to comply with the mass emission limit requirement at the outlet of the control device.

(ii) Conduct the performance test according to the procedures in §§ 63.997 and 63.2450(g). Use Method 18 of 40 CFR part 60, appendix A–6, or Method 320 of appendix A to this part to determine the ethylene oxide concentration. Use Method 1 or 1A of 40 CFR part 60, appendix A–1, to select the sampling site. Determine the gas volumetric flowrate using Method 2, 2A, 2C, or 2D of 40 CFR part 60, appendix A–2. Use Method 4 of 40 CFR part 60, appendix A–3, to convert the volumetric flowrate to a dry basis.

(iii) Calculate the mass emission rate of ethylene oxide exiting the control device using Equation 2 to paragraph (a)(2)(iii) of this section. You have demonstrated initial compliance if the ethylene oxide from all process vents (controlled and uncontrolled) is less than 5 pounds per year when combined.

(iv) Comply with the requirements specified in paragraphs (a)(2)(v) through (viii) of this section, as applicable.

(b) *Continuous compliance.* For continuous compliance, you must comply with paragraphs (b)(1) through (6) of this section, as applicable.

(1) If you choose to reduce emissions of ethylene oxide by venting emissions through a closed-vent system to a flare as specified in Table 1, 2, or 4 to this subpart, then you must comply with the requirements in §§ 63.983 and 63.2450(e)(4) through (6).

(2) Continuously monitor the ethylene oxide concentration at the exit of the control device using an FTIR CEMS meeting the requirements of Performance Specification 15 of 40 CFR part 60, appendix B, and § 63.2450(j). If you use an FTIR CEMS, you do not need to conduct the performance testing required in paragraph (b)(3) of this section or the operating parameter monitoring required in paragraphs (b)(4) through (6) of this section.

(3) Conduct a performance test no later than 60 months after the previous performance test and reestablish operating parameter limits following the procedures in paragraph (a)(2) through (4) of this section. The Administrator may request a repeat performance test at any time. For purposes of compliance with this paragraph (b)(3), you may not use a design evaluation.

(4) If you vent emissions through a closed-vent system to a scrubber, then you must comply with § 63.2450(e)(4) and (6) and the requirements in § 63.983, and you must meet the operating parameter limits specified in paragraphs (b)(4)(i) through (v) of this section.

(i) Minimum scrubber liquid-to-gas ratio (L/G), equal to the average L/G measured during the most recent performance test. Determine total scrubber liquid inlet flow rate with a flow sensor with a minimum accuracy of at least ±5 percent over the normal range of flow measured, or 1.9 liters per minute (0.5 gallons per minute), whichever is greater. Determine exit gas flow rate with a flow sensor with a minimum accuracy of at least ±5 percent over the normal range of flow measured, or 280 liters per minute (10 cubic feet per minute), whichever is greater. Compliance with the minimum L/G operating limit must be determined continuously on a 1-hour block basis.

(ii) Maximum scrubber liquid pH of the liquid in the reactant tank, equal to the average pH measured during the most recent performance test. Compliance with the pH operating limit must be determined continuously on a 1-hour block basis. Use a pH sensor with a minimum accuracy of ±0.2 pH units.

(iii) Pressure drop across the scrubber column, within the pressure drop range specified by the manufacturer or established based on engineering analysis. Compliance with the pressure drop operating limit must be determined continuously on a 1-hour block basis. Use pressure sensors with a minimum accuracy of ±5 percent over the normal operating range or 0.12 kilopascals, whichever is greater.

(iv) Maximum temperature of the water entering the scrubber column, equal to the average temperature measured during the most recent performance test. Compliance with the inlet water temperature operating limit must be determined continuously on a 1-hour block basis. Use a temperature sensor with a minimum accuracy of ±1 percent over the normal range of

sfrattini on LAPJZKW1R2 with $$_JOB
VerDate Sep<11>2014 09:16 Apr 04, 2023 Jkt 256165 PO 00000 Frm 00472 Fmt 8010 Sfmt 8010 Q:\40\256165.XXX PC31

the temperature measured, expressed in degrees Celsius, or 2.8 degrees Celsius, whichever is greater.

(v) Liquid feed pressure to the scrubber column within the feed pressure range specified by the manufacturer or established based on engineering analysis. Compliance with the liquid feed pressure operating limit must be determined continuously on a 1-hour block basis. Use a pressure sensor with a minimum accuracy of ±5 percent over the normal operating range or 0.12 kilopascals, whichever is greater.

(5) If you vent emissions through a closed-vent system to a thermal oxidizer, then you must comply with §63.2450(e)(4) and (6) and the requirements in §63.983, and you must meet the operating parameter limits specified in paragraphs (b)(5)(i) and (ii) of this section and the requirements in paragraph (b)(5)(iii) of this section.

(i) Minimum combustion chamber temperature, equal to the average combustion chamber temperature measured during the most recent performance test. Determine combustion chamber temperature with a temperature sensor with a minimum accuracy of at least ±1 percent over the normal range of temperature measured, expressed in degrees Celsius, or 2.8 degrees Celsius, whichever is greater. Compliance with the minimum combustion chamber temperature operating limit must be determined continuously on a 1-hour block basis.

(ii) Maximum flue gas flow rate, equal to the average flue gas flow rate measured during the most recent performance test. Determine flue gas flow rate with a flow sensor with a minimum accuracy of at least ±5 percent over the normal range of flow measured, or 280 liters per minute (10 cubic feet per minute), whichever is greater. Compliance with the maximum flue gas flow rate operating limit must be determined continuously on a 1-hour block basis.

(iii) You must maintain the thermal oxidizer in accordance with good combustion practices that ensure proper combustion. Good combustion practices include, but are not limited to, proper burner maintenance, proper burner alignment, proper fuel to air distribution and mixing, routine inspection, and preventative maintenance.

(6) If you vent emissions through a closed-vent system to a control device other than a flare, scrubber, or thermal oxidizer, then you must comply with §63.2450(e)(4) and (6) and the requirements in §63.983, and you must monitor the operating parameters identified in paragraph (a)(2)(viii) of this section and meet the established operating parameter limits to ensure continuous compliance. The frequency of monitoring and averaging time will be determined based upon the information provided to the Administrator.

(c) *Pressure vessels.* If you have a storage tank in ethylene oxide service that is considered a pressure vessel as defined in as defined in §63.2550(i), then you must operate and maintain the pressure vessel, as specified in paragraphs (c)(1) through (5) of this section.

(1) The pressure vessel must be designed to operate with no detectable emissions at all times.

(2) Monitor each point on the pressure vessel through which ethylene oxide could potentially be emitted by conducting initial and annual performance tests using Method 21 of 40 CFR part 60, appendix A–7.

(3) Each instrument reading greater than 500 ppmv is a deviation.

(4) Estimate the flow rate and total regulated material emissions from the defect. Assume the pressure vessel has been emitting for half of the time since the last performance test, unless other information supports a different assumption.

(5) Whenever ethylene oxide is in the pressure vessel, you must operate the pressure vessel as a closed system that vents through a closed vent system to a control device as specified in paragraphs (c)(5)(i) through (iii) of this section, as applicable.

(i) For closed vent systems, comply with §63.2450(e)(4) and (6) and the requirements in §63.983.

(ii) For a non-flare control device, comply with requirements as specified in paragraph (b) of this section.

(iii) For a flare, comply with the requirements of §63.2450(e)(5).

(d) *Equipment in ethylene oxide service.* Except as specified in paragraphs (d)(1) through (4) and (e) of this section, for

sfrattini on LAPJZKW1R2 with $$_JOB
VerDate Sep<11>2014 09:16 Apr 04, 2023 Jkt 256165 PO 00000 Frm 00473 Fmt 8010 Sfmt 8010 Q:\40\256165.XXX PC31

equipment in ethylene oxide service as defined in § 63.2550(i), you must comply with the requirements of subpart UU or H of this part, or 40 CFR part 65, subpart F.

(1) For pumps in ethylene oxide service, you must comply with the requirements in paragraphs (d)(1)(i) through (iii) of this section.

(i) The instrument reading that defines a leak for pumps is 1,000 parts per million or greater.

(ii) The monitoring period for pumps is monthly.

(iii) When a leak is detected, it must be repaired as soon as practicable, but not later than 15 calendar days after it is detected.

(2) For connectors in ethylene oxide service, you must comply with the requirements in paragraphs (d)(2)(i) through (iii) of this section.

(i) The instrument reading that defines a leak for connectors is 500 parts per million or greater.

(ii) The monitoring period for connectors is once every 12 months.

(iii) When a leak is detected, it must be repaired as soon as practicable, but not later than 15 calendar days after it is detected.

(3) For each light liquid pump or connector in ethylene oxide service that is added to an affected source, and for each light liquid pump or connector in ethylene oxide service that replaces a light liquid pump or connector in ethylene oxide service, you must initially monitor for leaks within 5 days after initial startup of the equipment.

(4) Pressure relief devices in ethylene oxide service must comply with the requirements in § 63.2480(e) and (f), except as specified in paragraphs (d)(4)(i) through (v) of this section.

(i) The second sentence in § 63.2480(e)(3)(iv) does not apply.

(ii) Section 63.2480(e)(3)(v) does not apply.

(iii) Section 63.2480(e)(6)(ii) does not apply.

(iv) Any release event from an affected pressure relief device is a deviation of the pressure release management work practice standards.

(v) Replace all references to § 63.2445(g) with § 63.2445(h).

(e) *Non-applicable referenced provisions.* The referenced provisions specified in paragraphs (e)(1) through (15) of this section do not apply when demonstrating compliance with this section.

(1) Section 63.163(c)(3) of subpart H.

(2) Section 63.163(e) of subpart H.

(3) The second sentence of § 63.181(d)(5)(i) of subpart H.

(4) Section 63.1026(b)(3) of subpart UU.

(5) Section 63.1026(e) of subpart UU.

(6) The phrase ''(except during periods of startup, shutdown, or malfunction)'' from § 63.1028(e)(1)(i)(A) of subpart UU.

(7) The phrase ''(except during periods of startup, shutdown, or malfunction)'' from § 63.1031(b)(1) of subpart UU.

(8) The second sentence of § 65.105(f)(4)(i) of this chapter.

(9) Section 65.107(b)(3) of this chapter.

(10) Section 65.107(e) of this chapter.

(11) The phrase ''(except during periods of start-up, shutdown, or malfunction)'' from § 65.109(e)(1)(i)(A) of this chapter.

(12) The phrase ''(except during periods of start-up, shutdown, or malfunction)'' from § 65.112(b)(1) of this chapter.

(13) The last sentence of § 65.115(b)(1) of this chapter.

(14) The last sentence of § 65.115(b)(2) of this chapter.

(15) For flares complying with § 63.2450(e)(5), the following provisions do not apply:

(i) Section 63.172(d) of subpart H;

(ii) Section 63.180(e) of subpart H;

(iii) Section 63.181(g)(1)(iii) of subpart H;

(iv) The phrase ''including periods when a flare pilot light system does not have a flame'' from § 63.181(g)(2)(i) of subpart H;

(v) Section 63.1034(b)(2)(iii) of subpart H; and

(vi) Section 65.115(b)(2) of this chapter.

(16) Requirements for maintenance vents in § 63.2450(v).

[85 FR 49147, Aug. 12, 2020]

sfrattini on LAPJZKW1R2 with $$_JOB
VerDate Sep<11>2014 09:16 Apr 04, 2023 Jkt 256165 PO 00000 Frm 00474 Fmt 8010 Sfmt 8010 Q:\40\256165.XXX PC31

ALTERNATIVE MEANS OF COMPLIANCE

§ 63.2495 How do I comply with the pollution prevention standard?

(a) You may elect to comply with the pollution prevention alternative requirements specified in paragraphs (a)(1) and (2) of this section in lieu of the emission limitations and work practice standards contained in Tables 1 through 7 to this subpart for any MCPU for which initial startup occurred before April 4, 2002.

(1) You must reduce the production-indexed HAP consumption factor (HAP factor) by at least 65 percent from a 3-year average baseline beginning no earlier than the 1994 through 1996 calendar years. For any reduction in the HAP factor that you achieve by reducing HAP that are also volatile organic compounds (VOC), you must demonstrate an equivalent reduction in the production-indexed VOC consumption factor (VOC factor) on a mass basis. For any reduction in the HAP factor that you achieve by reducing a HAP that is not a VOC, you may not increase the VOC factor.

(2) Any MCPU for which you seek to comply by using the pollution prevention alternative must begin with the same starting material(s) and end with the same product(s). You may not comply by eliminating any steps of a process by transferring the step offsite (to another manufacturing location). You may also not merge a solvent recovery step conducted offsite to onsite and as part of an existing process as a method of reducing consumption.

(3) You may comply with the requirements of paragraph (a)(1) of this section for a series of processes, including situations where multiple processes are merged, if you demonstrate to the satisfaction of the Administrator that the multiple processes were merged after the baseline period into an existing process or processes.

(b) *Exclusions*. (1) You must comply with the emission limitations and work practice standards contained in Tables 1 through 7 to this subpart for all HAP that are generated in the MCPU and that are not included in consumption, as defined in § 63.2550. If any vent stream routed to the combustion control is a halogenated vent stream, as defined in § 63.2550, then hydrogen halides that are generated as a result of combustion control must be controlled according to the requirements in § 63.2450(e)(4) and the requirements of § 63.994 and the requirements referenced therein.

(2) You may not merge nondedicated formulation or nondedicated solvent recovery processes with any other processes.

(c) *Initial compliance procedures*. To demonstrate initial compliance with paragraph (a) of this section, you must prepare a demonstration summary in accordance with paragraph (c) (1) of this section and calculate baseline and target annual HAP and VOC factors in accordance with paragraphs (c) (2) and (3) of this section.

(1) *Demonstration plan*. You must prepare a pollution prevention demonstration plan that contains, at a minimum, the information in paragraphs (c)(1) (i) through (iii) of this section for each MCPU for which you comply with paragraph (a) of this section.

(i) Descriptions of the methodologies and forms used to measure and record consumption of HAP and VOC compounds.

(ii) Descriptions of the methodologies and forms used to measure and record production of the product(s).

(iii) Supporting documentation for the descriptions provided in accordance with paragraphs (c)(1) (i) and (ii) of this section including, but not limited to, samples of operator log sheets and daily, monthly, and/or annual inventories of materials and products. You must describe how this documentation will be used to calculate the annual factors required in paragraph (d) of this section.

(2) *Baseline factors*. You must calculate baseline HAP and VOC factors by dividing the consumption of total HAP and total VOC by the production rate, per process, for the first 3-year period in which the process was operational, beginning no earlier than the period consisting of the 1994 through 1996 calendar years.

(3) *Target annual factors*. You must calculate target annual HAP and VOC factors. The target annual HAP factor must be equal to 35 percent of the baseline HAP factor. The target annual

sfrattini on LAPJZKW1R2 with $$_JOB
VerDate Sep<11>2014 09:16 Apr 04, 2023 Jkt 256165 PO 00000 Frm 00475 Fmt 8010 Sfmt 8010 Q:\40\256165.XXX PC31

VOC factor must be lower than the baseline VOC factor by an amount equivalent to the reduction in any HAP that is also a VOC, on a mass basis. The target annual VOC factor may be the same as the baseline VOC factor if the only HAP you reduce is not a VOC.

(d) *Continuous compliance requirements.* You must calculate annual rolling average values of the HAP and VOC factors (annual factors) in accordance with the procedures specified in paragraphs (d) (1) through (3) of this section. To show continuous compliance, the annual factors must be equal to or less than the target annual factors calculated according to paragraph (c)(3) of this section.

(1) To calculate the annual factors, you must divide the consumption of both total HAP and total VOC by the production rate, per process, for 12-month periods at the frequency specified in either paragraph (d) (2) or (3) of this section, as applicable.

(2) For continuous processes, you must calculate the annual factors every 30 days for the 12-month period preceding the 30th day (i.e., annual rolling average calculated every 30 days). A process with both batch and continuous operations is considered a continuous process for the purposes of this section.

(3) For batch processes, you must calculate the annual factors every 10 batches for the 12-month period preceding the 10th batch (*i.e.*, annual rolling average calculated every 10 batches), except as specified in paragraphs (d)(3) (i) and (ii) of this section.

(i) If you produce more than 10 batches during a month, you must calculate the annual factors at least once during that month.

(ii) If you produce less than 10 batches in a 12-month period, you must calculate the annual factors for the number of batches in the 12-month period since the previous calculations.

(e) *Records.* You must keep records of HAP and VOC consumption, production, and the rolling annual HAP and VOC factors for each MCPU for which you are complying with paragraph (a) of this section.

(f) *Reporting.* (1) You must include the pollution prevention demonstration plan in the precompliance report required by § 63.2520(c).

(2) You must identify all days when the annual factors were above the target factors in the compliance reports.

[68 FR 63888, Nov. 10, 2003, as amended at 71 FR 40336, July 14, 2006; 85 FR 49150, Aug. 12, 2020]

§ 63.2500 How do I comply with emissions averaging?

(a) For an existing source, you may elect to comply with the percent reduction emission limitations in Tables 1, 2, 4, 5, and 7 to this subpart by complying with the emissions averaging provisions specified in § 63.150, except as specified in paragraphs (b) through (g) of this section.

(b) The batch process vents in an MCPU collectively are considered one individual emission point for the purposes of emissions averaging, except that only individual batch process vents must be excluded to meet the requirements of § 63.150(d)(5).

(c) References in § 63.150 to §§ 63.112 through 63.130 mean the corresponding requirements in §§ 63.2450 through 63.2490, including applicable monitoring, recordkeeping, and reporting.

(d) References to ''periodic reports'' in § 63.150 mean ''compliance report'' for the purposes of this subpart.

(e) For batch process vents, estimate uncontrolled emissions for a standard batch using the procedures in § 63.1257(d)(2)(i) and (ii) instead of the procedures in § 63.150(g)(2). Multiply the calculated emissions per batch by the number of batches per month when calculating the monthly emissions for use in calculating debits and credits.

(f) References to ''storage vessels'' in § 63.150 mean ''storage tank'' as defined in § 63.2550 for the purposes of this subpart.

(g) Beginning no later than the compliance dates specified in § 63.2445(g), § 63.150(f)(2) does not apply when demonstrating compliance with this section.

[68 FR 63888, Nov. 10, 2003, as amended at 85 FR 49150, Aug. 12, 2020]

§ 63.2505 How do I comply with the alternative standard?

As an alternative to complying with the emission limits and work practice

sfrattini on LAPJZKW1R2 with $$_JOB
VerDate Sep<11>2014 09:16 Apr 04, 2023 Jkt 256165 PO 00000 Frm 00476 Fmt 8010 Sfmt 8010 Q:\40\256165.XXX PC31

standards for process vents and storage tanks in Tables 1 through 4 to this subpart and the requirements in §§63.2455 through 63.2470, you may comply with the emission limits in paragraph (a) of this section and demonstrate compliance in accordance with the requirements in paragraph (b) of this section.

(a) *Emission limits and work practice standards.* (1) You must route vent streams through a closed-vent system to a control device that reduces HAP emissions as specified in either paragraph (a)(1)(i) or (ii) of this section.

(i) If you use a combustion control device, it must reduce HAP emissions as specified in paragraphs (a)(1)(i)(A), (B), and (C) of this section.

(A) To an outlet TOC concentration of 20 parts per million by volume (ppmv) or less.

(B) To an outlet concentration of hydrogen halide and halogen HAP of 20 ppmv or less.

(C) As an alternative to paragraph (a)(1)(i)(B) of this section, if you control halogenated vent streams emitted from a combustion device followed by a scrubber, reduce the hydrogen halide and halogen HAP generated in the combustion device by greater than or equal to 95 percent by weight in the scrubber.

(ii) If you use a noncombustion control device(s), it must reduce HAP emissions to an outlet total organic HAP concentration of 50 ppmv or less, and an outlet concentration of hydrogen halide and halogen HAP of 50 ppmv or less.

(2) Any Group 1 process vents within a process that are not controlled according to this alternative standard must be controlled according to the emission limits in tables 1 through 3 to this subpart.

(b) *Compliance requirements.* To demonstrate compliance with paragraph (a) of this section, you must meet the requirements of §63.1258(b)(5) beginning no later than the initial compliance date specified in §63.2445, except as specified in paragraphs (b)(1) through (9) of this section.

(1) You must comply with the requirements in §63.2450(e)(4) and (6), and the requirements in §63.983 and the requirements referenced therein for closed-vent systems, except if you are not reducing organic HAP emissions by venting emissions through a closed-vent system to any combination of control devices, including a flare or recovery device, you are not required to comply with the requirements in §63.983(b)(1)(i)(A), (b)(1)(ii), (c), (d)(1)(ii), and (d)(2) and (3).

(2) When §63.1258(b)(5)(i) refers to §§63.1253(d) and 63.1254(c), the requirements in paragraph (a) of this section apply for the purposes of this subpart FFFF.

(3) When §63.1258(b)(5)(i)(B) refers to ''HCl,'' it means ''total hydrogen halide and halogen HAP'' for the purposes of this subpart FFFF.

(4) When §63.1258(b)(5)(ii) refers to §63.1257(a)(3), it means §63.2450(j)(5) for the purposes of this subpart FFFF.

(5) You must submit the results of any determination of the target analytes of predominant HAP in the notification of compliance status report.

(6) If you elect to comply with the requirement to reduce hydrogen halide and halogen HAP by greater than or equal to 95 percent by weight in paragraph (a)(1)(i)(C) of this section, you must meet the requirements in paragraphs (b)(6)(i) and (ii) of this section.

(i) Demonstrate initial compliance with the 95-percent reduction by conducting a performance test and setting a site-specific operating limit(s) for the scrubber in accordance with the requirements in §63.2450(e)(4) and the requirements of §63.994 and the requirements referenced therein. You must submit the results of the initial compliance demonstration in the notification of compliance status report. If the performance test report is submitted electronically through the EPA's CEDRI in accordance with §63.2520(f), the process unit(s) tested, the pollutant(s) tested, and the date that such performance test was conducted may be submitted in the notification of compliance status report in lieu of the performance test results. The performance test results must be submitted to CEDRI by the date the notification of compliance status report is submitted.

(ii) Install, operate, and maintain CPMS for the scrubber as specified in §§63.994(c) and 63.2450(k), instead of as specified in §63.1258(b)(5)(i)(C). You

sfrattini on LAPJZKW1R2 with $$_JOB
VerDate Sep<11>2014 09:16 Apr 04, 2023 Jkt 256165 PO 00000 Frm 00477 Fmt 8010 Sfmt 8010 Q:\40\256165.XXX PC31

must also comply with the requirements in § 63.2450(e)(4), as applicable.

(7) If flow to the scrubber could be intermittent, you must install, calibrate, and operate a flow indicator as specified in § 63.2460(c)(7).

(8) Use the operating day as the averaging period for CEMS data and scrubber parameter monitoring data.

(9) The requirements in paragraph (a) of this section do not apply to emissions from storage tanks during periods of planned routine maintenance of the control device that do not exceed 240 hr/yr. You may submit an application to the Administrator requesting an extension of this time limit to a total of 360 hr/yr in accordance with the procedures specified in § 63.2470(d). You must comply with the recordkeeping and reporting specified in §§ 63.998(d)(2)(ii) and 63.999(c)(4) for periods of planned routine maintenance.

[68 FR 63888, Nov. 10, 2003, as amended at 70 FR 38559, July 1, 2005; 85 FR 49150, Aug. 12, 2020]

NOTIFICATION, REPORTS, AND RECORDS

§ 63.2515 What notifications must I submit and when?

(a) *General.* Except as specified in paragraph (d) of this section, you must submit all of the notifications in §§ 63.6(h)(4) and (5), 63.7(b) and (c), 63.8(e) and (f)(4) and (6), and 63.9(b) through (h) of subpart A that apply to you by the dates specified.

(b) *Initial notification.* (1) As specified in § 63.9(b)(2), if you startup your affected source before November 10, 2003, you must submit an initial notification not later than 120 calendar days after November 10, 2003, or no later than 120 days after the source becomes subject to this subpart, whichever is later.

(2) As specified in § 63.9(b)(3), if you startup your new affected source on or after November 10, 2003, you must submit an initial notification not later than 120 calendar days after you become subject to this subpart.

(c) *Notification of performance test.* If you are required to conduct a performance test, you must submit a notification of intent to conduct a performance test at least 60 calendar days before the performance test is scheduled to begin as required in § 63.7(b)(1). For any performance test required as part of the initial compliance procedures for batch process vents in table 2 to this subpart, you must also submit the test plan required by § 63.7(c) and the emission profile with the notification of the performance test.

(d) *Supplement to Notification of Compliance Status.* You must also submit supplements to the Notification of Compliance Status as specified in § 63.2520(d)(3) through (5).

[68 FR 63888, Nov. 10, 2003, as amended at 85 FR 49150, Aug. 12, 2020; 85 FR 73903, Nov. 19, 2020]

§ 63.2520 What reports must I submit and when?

(a) You must submit each report in Table 11 to this subpart that applies to you.

(b) Unless the Administrator has approved a different schedule for submission of reports under § 63.10(a), you must submit each report by the date in table 11 to this subpart and according to paragraphs (b)(1) through (5) of this section.

(1) The first compliance report must cover the period beginning on the compliance date that is specified for your affected source in § 63.2445 and ending on June 30 or December 31, whichever date is the first date following the end of the first 6 months after the compliance date that is specified for your affected source in § 63.2445.

(2) The first compliance report must be postmarked or delivered no later than August 31 or February 28, whichever date is the first date following the end of the first reporting period specified in paragraph (b)(1) of this section.

(3) Each subsequent compliance report must cover the semiannual reporting period from January 1 through June 30 or the semiannual reporting period from July 1 through December 31.

(4) Each subsequent compliance report must be postmarked or delivered no later than August 31 or February 28, whichever date is the first date following the end of the semiannual reporting period.

(5) For each affected source that is subject to permitting regulations pursuant to 40 CFR part 70 or 40 CFR part 71, and if the permitting authority has

sfrattini on LAPJZKW1R2 with $$_JOB
VerDate Sep<11>2014 09:16 Apr 04, 2023 Jkt 256165 PO 00000 Frm 00478 Fmt 8010 Sfmt 8010 Q:\40\256165.XXX PC31

established dates for submitting semiannual reports pursuant to 40 CFR 70.6(a)(3)(iii)(A) or 40 CFR 71.6(a)(3)(iii)(A), you may submit the first and subsequent compliance reports according to the dates the permitting authority has established instead of according to the dates in paragraphs (b)(1) through (4) of this section.

(c) *Precompliance report.* You must submit a precompliance report to request approval for any of the items in paragraphs (c)(1) through (8) of this section. We will either approve or disapprove the report within 90 days after we receive it. If we disapprove the report, you must still be in compliance with the emission limitations and work practice standards in this subpart by the compliance date. To change any of the information submitted in the report, you must notify us 60 days before the planned change is to be implemented.

(1) Requests for approval to set operating limits for parameters other than those specified in §§ 63.2455 through 63.2485 and referenced therein. Alternatively, you may make these requests according to § 63.8(f).

(2) Descriptions of daily or per batch demonstrations to verify that control devices subject to § 63.2450(k)(6) are operating as designed.

(3) A description of the test conditions, data, calculations, and other information used to establish operating limits according to § 63.2460(c)(3).

(4) Data and rationale used to support an engineering assessment to calculate uncontrolled emissions in accordance with § 63.1257(d)(2)(ii). This requirement does not apply to calculations of hydrogen halide and halogen HAP emissions as specified in § 63.2465(b), to determinations that the total HAP concentration is less than 50 ppmv, or if you use previous test data to establish the uncontrolled emissions.

(5) The pollution prevention demonstration plan required in § 63.2495(c)(1), if you are complying with the pollution prevention alternative.

(6) Documentation of the practices that you will implement to minimize HAP emissions from streams that contain energetics and organic peroxides, and rationale for why meeting the emission limit specified in tables 1 through 7 to this subpart would create an undue safety hazard.

(7) For fabric filters that are monitored with bag leak detectors, an operation and maintenance plan that describes proper operation and maintenance procedures, and a corrective action plan that describes corrective actions to be taken, and the timing of those actions, when the PM concentration exceeds the set point and activates the alarm.

(8) For halogen reduction device other than a scrubber, procedures for establishing monitoring parameters as required by § 63.2450(e)(3)(ii).

(d) *Notification of compliance status report.* You must submit a notification of compliance status report according to the schedule in paragraph (d)(1) of this section, and the notification of compliance status report must contain the information specified in paragraphs (d)(2) through (5) of this section.

(1) You must submit the notification of compliance status report no later than 150 days after the applicable compliance date specified in § 63.2445.

(2) The notification of compliance status report must include the information in paragraphs (d)(2)(i) through (ix) of this section.

(i) The results of any applicability determinations, emission calculations, or analyses used to identify and quantify HAP usage or HAP emissions from the affected source.

(ii) The results of emissions profiles, performance tests, engineering analyses, design evaluations, flare compliance assessments, inspections and repairs, and calculations used to demonstrate initial compliance according to §§ 63.2455 through 63.2485. For performance tests, results must include descriptions of sampling and analysis procedures and quality assurance procedures. If the performance test report is submitted electronically through the EPA's CEDRI in accordance with paragraph (f) of this section, the process unit(s) tested, the pollutant(s) tested, and the date that such performance test was conducted may be submitted in the notification of compliance status report in lieu of the performance test results. The performance test results must be submitted to CEDRI by

sfrattini on LAPJZKW1R2 with $$_JOB
VerDate Sep<11>2014 09:16 Apr 04, 2023 Jkt 256165 PO 00000 Frm 00479 Fmt 8010 Sfmt 8010 Q:\40\256165.XXX PC31

the date the notification of compliance status report is submitted.

(iii) Descriptions of monitoring devices, monitoring frequencies, and the operating limits established during the initial compliance demonstrations, including data and calculations to support the levels you establish.

(iv) All operating scenarios.

(v) Descriptions of worst-case operating and/or testing conditions for control devices.

(vi) Identification of parts of the affected source subject to overlapping requirements described in § 63.2535 and the authority under which you will comply.

(vii) The information specified in § 63.1039(a)(1) through (3) for each process subject to the work practice standards for equipment leaks in Table 6 to this subpart.

(viii) Identify storage tanks for which you are complying with the vapor balancing alternative in § 63.2470(e).

(ix) Records as specified in § 63.2535(l)(1) through (3) of process units used to create a PUG and calculations of the initial primary product of the PUG.

(3) For flares subject to the requirements of § 63.2450(e)(5), you must also submit the information in this paragraph (d)(3) in a supplement to the Notification of Compliance Status within 150 days after the first applicable compliance date for flare monitoring. In lieu of the information required in § 63.987(b) of subpart SS, the supplement to the Notification of Compliance Status must include flare design (*e.g.*, steam-assisted, air-assisted, non-assisted, or pressure-assisted multipoint); all visible emission readings, heat content determinations, flow rate measurements, and exit velocity determinations made during the initial visible emissions demonstration required by § 63.670(h) of subpart CC, as applicable; and all periods during the compliance determination when the pilot flame or flare flame is absent.

(4) For pressure relief devices subject to the pressure release management work practice standards in § 63.2480(e)(3), you must also submit the information listed in paragraphs (d)(4)(i) and (ii) of this section in a supplement to the Notification of Compliance Status within 150 days after the first applicable compliance date for pressure relief device monitoring.

(i) A description of the monitoring system to be implemented, including the relief devices and process parameters to be monitored, and a description of the alarms or other methods by which operators will be notified of a pressure release.

(ii) A description of the prevention measures to be implemented for each affected pressure relief device.

(5) For process vents, storage tanks, and equipment leaks subject to the requirements of § 63.2493, you must also submit the information in this paragraph (d)(5) in a supplement to the Notification of Compliance Status within 150 days after the first applicable compliance date. The supplement to the Notification of Compliance Status must identify all process vents, storage tanks, and equipment that are in ethylene oxide service as defined in § 63.2550, the method(s) used to control ethylene oxide emissions from each process vent and storage tank (*i.e.*, use of a flare, scrubber, or other control device), the method(s) used to control ethylene oxide emissions from equipment (*i.e.*, subpart UU or H of this part, or 40 CFR part 65, subpart F), and the information specified in paragraphs (d)(5)(i) through (iii) of this section.

(i) For process vents, include all uncontrolled, undiluted ethylene oxide concentration measurements, and the calculations you used to determine the total uncontrolled ethylene oxide mass emission rate for the sum of all vent gas streams.

(ii) For storage tanks, include the concentration of ethylene oxide of the fluid stored in each storage tank.

(iii) For equipment, include the percent ethylene oxide content of the process fluid and the method used to determine it.

(e) *Compliance report.* The compliance report must contain the information specified in paragraphs (e)(1) through (17) of this section. On and after August 12, 2023 or once the reporting template for this subpart has been available on the CEDRI website for 1 year, whichever date is later, you must submit all subsequent reports to the EPA

sfrattini on LAPJZKW1R2 with $$_JOB
VerDate Sep<11>2014 09:16 Apr 04, 2023 Jkt 256165 PO 00000 Frm 00480 Fmt 8010 Sfmt 8010 Q:\40\256165.XXX PC31

via the CEDRI, which can be accessed through the EPA's CDX (*https://cdx.epa.gov/*). The EPA will make all the information submitted through CEDRI available to the public without further notice to you. Do not use CEDRI to submit information you claim as CBI. Anything submitted using CEDRI cannot later be claimed to be CBI. You must use the appropriate electronic report template on the CEDRI website (*https://www.epa.gov/electronic-reporting-air-emissions/compliance-and-emissions-data-reporting-interface-cedri*) for this subpart. The date report templates become available will be listed on the CEDRI website. Unless the Administrator or delegated state agency or other authority has approved a different schedule for submission of reports under §§ 63.9(i) and 63.10(a) of subpart A, the report must be submitted by the deadline specified in this subpart, regardless of the method in which the report is submitted. Although we do not expect persons to assert a claim of CBI, if you wish to assert a CBI claim, submit a complete report, including information claimed to be CBI, to the EPA. The report must be generated using the appropriate form on the CEDRI website or an alternate electronic file consistent with the extensible markup language (XML) schema listed on the CEDRI website. Submit the file on a compact disc, flash drive, or other commonly used electronic storage medium and clearly mark the medium as CBI. Mail the electronic medium to U.S. Environmental Protection Agency, Office of Air Quality Planning and Standards, Sector Policies and Programs Division, CORE CBI Office, U.S. EPA Mailroom (C404–02), Attention: Miscellaneous Organic Chemical Manufacturing Sector Lead, 4930 Old Page Rd., Durham, NC 27703. The same file with the CBI omitted must be submitted to the EPA via the EPA's CDX as described in this paragraph (e). All CBI claims must be asserted at the time of submission. Furthermore under CAA section 114(c) emissions data is not entitled to confidential treatment, and the EPA is required to make emissions data available to the public. Thus, emissions data will not be protected as CBI and will be made publicly available. You may assert a claim of EPA system outage or *force majeure* for failure to timely comply with the reporting requirement in this paragraph (e) provided you meet the requirements outlined in paragraph (i) or (j) of this section, as applicable.

(1) Company name and address.

(2) Statement by a responsible official with that official's name, title, and signature, certifying the accuracy of the content of the report. If your report is submitted via CEDRI, the certifier's electronic signature during the submission process replaces the requirement in this paragrpah (e)(2).

(3) Date of report and beginning and ending dates of the reporting period. You are no longer required to provide the date of report when the report is submitted via CEDRI.

(4) For each SSM during which excess emissions occur, the compliance report must include records that the procedures specified in your startup, shutdown, and malfunction plan (SSMP) were followed or documentation of actions taken that are not consistent with the SSMP, and include a brief description of each malfunction. On and after August 12, 2023, this paragraph (e)(4) no longer applies; however, for historical compliance purposes, a copy of the plan must be retained and available on-site for five years after August 12, 2023.

(5) The compliance report must contain the information on deviations, as defined in § 63.2550, according to paragraphs (e)(5)(i), (ii), (iii), and (iv) of this section.

(i) If there are no deviations from any emission limit, operating limit or work practice standard specified in this subpart, include a statement that there were no deviations from the emission limits, operating limits, or work practice standards during the reporting period.

(ii) For each deviation from an emission limit, operating limit, and work practice standard that occurs at an affected source where you are not using a continuous monitoring system (CMS) to comply with the emission limit or work practice standard in this subpart, you must include the information in paragraphs (e)(5)(ii)(A) through (D) of

sfrattini on LAPJZKW1R2 with $$_JOB
VerDate Sep<11>2014 09:16 Apr 04, 2023 Jkt 256165 PO 00000 Frm 00481 Fmt 8010 Sfmt 8010 Q:\40\256165.XXX PC31

this section. This includes periods of SSM.

(A) The total operating time in hours of the affected source during the reporting period.

(B) Except as specified in paragraph (e)(5)(ii)(D) of this section, information on the number, duration, and cause of deviations (including unknown cause, if applicable), as applicable, and the corrective action taken.

(C) Operating logs of processes with batch vents from batch operations for the day(s) during which the deviation occurred, except operating logs are not required for deviations of the work practice standards for equipment leaks.

(D) Beginning no later than the compliance dates specified in § 63.2445(g), paragraph (e)(5)(ii)(B) of this section no longer applies. Instead, report information for each deviation to meet an applicable standard. For each instance, report the start date, start time, and duration in hours of each deviation. For each deviation, the report must include a list of the affected sources or equipment, an estimate of the quantity in pounds of each regulated pollutant emitted over any emission limit, a description of the method used to estimate the emissions, the cause of the deviation (including unknown cause, if applicable), as applicable, and the corrective action taken.

(iii) For each deviation from an emission limit or operating limit occurring at an affected source where you are using a CMS to comply with an emission limit in this subpart, you must include the information in paragraphs (e)(5)(iii)(A) through (N) of this section. This includes periods of SSM.

(A) The start date, start time, and duration in hours that each CMS was inoperative, except for zero (low-level) and high-level checks.

(B) The start date, start time, and duration in hours that each CEMS was out-of-control and a description of the corrective actions taken.

(C) Except as specified in paragraph (e)(5)(iii)(M) of this section, the date and time that each deviation started and stopped, and whether each deviation occurred during a period of startup, shutdown, or malfunction or during another period.

(D) The total duration in hours of all deviations for each CMS during the reporting period, the total operating time in hours of the affected source during the reporting period, and the total duration as a percent of the total operating time of the affected source during that reporting period.

(E) Except as specified in paragraph (e)(5)(iii)(N) of this section, a breakdown of the total duration of the deviations during the reporting period into those that are due to startup, shutdown, control equipment problems, process problems, other known causes, and other unknown causes.

(F) The total duration in hours of CMS downtime for each CMS during the reporting period, and the total duration of CMS downtime as a percent of the total operating time of the affected source during that reporting period.

(G) An identification of each HAP that is known to be in the emission stream.

(H) A brief description of the process units.

(I) The monitoring equipment manufacturer(s) and model number(s) and the pollutant or parameter monitored.

(J) The date of the latest CMS certification or audit.

(K) Operating logs of processes with batch vents from batch operations for each day(s) during which the deviation occurred.

(L) The operating day or operating block average values of monitored parameters for each day(s) during which the deviation occurred.

(M) Beginning no later than the compliance dates specified in § 63.2445(g), paragraph (e)(5)(iii)(C) of this section no longer applies. Instead, report the number of deviation to meet an applicable standard. For each instance, report the start date, start time and duration in hours of each deviation. For each deviation, the report must include a list of the affected sources or equipment, an estimate of the quantity in pounds of each regulated pollutant emitted over any emission limit, a description of the method used to estimate the emissions, and the cause of the deviation (including unknown cause, if applicable), as applicable, and the corrective action taken.

sfrattini on LAPJZKW1R2 with $$_JOB
VerDate Sep<11>2014 09:16 Apr 04, 2023 Jkt 256165 PO 00000 Frm 00482 Fmt 8010 Sfmt 8010 Q:\40\256165.XXX PC31

(N) Beginning no later than the compliance dates specified in §63.2445(g), paragraph (e)(5)(iii)(E) of this section no longer applies. Instead, report a breakdown of the total duration in hours of the deviations during the reporting period into those that are due control equipment problems, process problems, other known causes, and other unknown causes.

(iv) If you documented in your notification of compliance status report that an MCPU has Group 2 batch process vents because the non-reactive HAP is the only HAP and usage is less than 10,000 lb/yr, the total uncontrolled organic HAP emissions from the batch process vents in an MCPU will be less than 1,000 lb/yr for the anticipated number of standard batches, or total uncontrolled hydrogen halide and halogen HAP emissions from all batch process vents and continuous process vents in a process are less than 1,000 lb/yr, include the records associated with each calculation required by §63.2525(e) that exceeds an applicable HAP usage or emissions threshold.

(6) If you use a CEMS, and there were no periods during which it was out-of-control as specified in §63.8(c)(7), include a statement that there were no periods during which the CEMS was out-of-control during the reporting period.

(7) Include each new operating scenario which has been operated since the time period covered by the last compliance report and has not been submitted in the notification of compliance status report or a previous compliance report. For each new operating scenario, you must report the information specified in §63.2525(b) and provide verification that the operating conditions for any associated control or treatment device have not been exceeded and that any required calculations and engineering analyses have been performed. For the purposes of this paragraph (e)(7), a revised operating scenario for an existing process is considered to be a new operating scenario.

(8) For process units added to a PUG, you must report the description and rationale specified in §63.2525(i)(4). You must report your primary product redeterminations specified in §63.2525(i)(5).

(9) Except as specified in §§63.2450(e)(4), 63.2480(f), and 63.2485(p) and (q) and paragraph (t) of this section, applicable records and information for periodic reports as specified in referenced subparts F, G, H, SS, UU, WW, and GGG of this part and subpart F of 40 CFR part 65.

(10) Except as specified in paragraph (e)(10)(ii) of this section, whenever you make a process change, or change any of the information submitted in the notification of compliance status report or a previous compliance report, that is not within the scope of an existing operating scenario, you must document the change in your compliance report. A process change does not include moving within a range of conditions identified in the standard batch, and a nonstandard batch does not constitute a process change.

(i) The notification must include all of the information in paragraphs (e)(10)(i)(A) through (C) of this section.

(A) A description of the process change.

(B) Revisions to any of the information reported in the original notification of compliance status report under paragraph (d) of this section.

(C) Information required by the notification of compliance status report under paragraph (d) of this section for changes involving the addition of processes or equipment at the affected source.

(ii) You must submit a report 60 days before the scheduled implementation date of any of the changes identified in paragraph (e)(10)(ii)(A), (B), or (C) of this section.

(A) Any change to the information contained in the precompliance report.

(B) A change in the status of a control device from small to large.

(C) A change from Group 2 to Group 1 for any emission point except for batch process vents that meet the conditions specified in §63.2460(b)(6)(i).

(11) For each flare subject to the requirements in §63.2450(e)(5), the compliance report must include the items specified in paragraphs (e)(11)(i) through (vi) of this section in lieu of the information required in §63.999(c)(3) of subpart SS.

sfrattini on LAPJZKW1R2 with $$_JOB
VerDate Sep<11>2014 09:16 Apr 04, 2023 Jkt 256165 PO 00000 Frm 00483 Fmt 8010 Sfmt 8010 Q:\40\256165.XXX PC31

(i) Records as specified in § 63.2525(m)(1) for each 15-minute block during which there was at least one minute when regulated material is routed to a flare and no pilot flame or flare flame is present. Include the start and stop time and date of each 15-minute block.

(ii) Visible emission records as specified in § 63.2525(m)(2)(iv) for each period of 2 consecutive hours during which visible emissions exceeded a total of 5 minutes.

(iii) The periods specified in § 63.2525(m)(6). Indicate the date and start and end times for each period, and the net heating value operating parameter(s) determined following the methods in § 63.670(k) through (n) of subpart CC as applicable.

(iv) For flaring events meeting the criteria in §§ 63.670(o)(3) of subpart CC and 63.2450(e)(5)(v):

(A) The start and stop time and date of the flaring event.

(B) The length of time in minutes for which emissions were visible from the flare during the event.

(C) For steam-assisted, air-assisted, and non-assisted flares, the start date, start time, and duration in minutes for periods of time that the flare tip velocity exceeds the maximum flare tip velocity determined using the methods in § 63.670(d)(2) of subpart CC and the maximum 15-minute block average flare tip velocity in ft/sec recorded during the event.

(D) Results of the root cause and corrective actions analysis completed during the reporting period, including the corrective actions implemented during the reporting period and, if applicable, the implementation schedule for planned corrective actions to be implemented subsequent to the reporting period.

(v) For pressure-assisted multi-point flares, the periods of time when the pressure monitor(s) on the main flare header show the burners operating outside the range of the manufacturer's specifications. Indicate the date and start and end times for each period.

(vi) For pressure-assisted multi-point flares, the periods of time when the staging valve position indicator monitoring system indicates a stage should not be in operation and is or when a stage should be in operation and is not. Indicate the date and start and end times for each period.

(12) For bypass lines subject to the requirements § 63.2450(e)(6), the compliance report must include the start date, start time, duration in hours, estimate of the volume of gas in standard cubic feet, the concentration of organic HAP in the gas in parts per million by volume and the resulting mass emissions of organic HAP in pounds that bypass a control device. For periods when the flow indicator is not operating, report the start date, start time, and duration in hours.

(13) For each nonregenerative adsorber and regenerative adsorber that is regenerated offsite subject to the requirements in § 63.2450(e)(7), you must report the date of each instance when breakthrough, as defined in § 63.2550(i), is detected between the first and second adsorber and the adsorber is not replaced according to § 63.2450(e)(7)(iii)(A).

(14) For any maintenance vent release exceeding the applicable limits in § 63.2450(v)(1), the compliance report must include the information specified in paragraphs (e)(14)(i) through (iv) of this section. For the purposes of this reporting requirement, if you comply with § 63.2450(v)(1)(iv) then you must report each venting event conducted under those provisions and include an explanation for each event as to why utilization of this alternative was required.

(i) Identification of the maintenance vent and the equipment served by the maintenance vent.

(ii) The date and time the maintenance vent was opened to the atmosphere.

(iii) The lower explosive limit in percent, vessel pressure in psig, or mass in pounds of VOC in the equipment, as applicable, at the start of atmospheric venting. If the 5 psig vessel pressure option in § 63.2450(v)(1)(ii) was used and active purging was initiated while the lower explosive limit was 10 percent or greater, also include the lower explosive limit of the vapors at the time active purging was initiated.

(iv) An estimate of the mass in pounds of organic HAP released during the entire atmospheric venting event.

sfrattini on LAPJZKW1R2 with $$_JOB
VerDate Sep<11>2014 09:16 Apr 04, 2023 Jkt 256165 PO 00000 Frm 00484 Fmt 8010 Sfmt 8010 Q:\40\256165.XXX PC31

(15) Compliance reports for pressure relief devices subject to the requirements §63.2480(e) must include the information specified in paragraphs (e)(15)(i) through (iii) of this section.

(i) For pressure relief devices in organic HAP gas or vapor service, pursuant to §63.2480(e)(1), report the instrument readings and dates for all readings of 500 ppmv or greater.

(ii) For pressure relief devices in organic HAP gas or vapor service subject to §63.2480(e)(2), report the instrument readings and dates of instrument monitoring conducted.

(iii) For pressure relief devices in organic HAP service subject to §63.2480(e)(3), report each pressure release to the atmosphere, including the start date, start time, and duration in minutes of the pressure release and an estimate of the mass quantity in pounds of each organic HAP released; the results of any root cause analysis and corrective action analysis completed during the reporting period, including the corrective actions implemented during the reporting period; and, if applicable, the implementation schedule for planned corrective actions to be implemented subsequent to the reporting period.

(16) For each heat exchange system subject to §63.2490(d), beginning no later than the compliance dates specified in §63.2445(g), the reporting requirements of §63.104(f)(2) no longer apply; instead, the compliance report must include the information specified in paragraphs (e)(16)(i) through (v) of this section.

(i) The number of heat exchange systems at the plant site subject to the monitoring requirements in §63.2490(d) during the reporting period;

(ii) The number of heat exchange systems subject to the monitoring requirements in §63.2490(d) at the plant site found to be leaking during the reporting period;

(iii) For each monitoring location where the total strippable hydrocarbon concentration or total hydrocarbon mass emissions rate was determined to be equal to or greater than the applicable leak definitions specified in §63.2490(d)(1)(v) during the reporting period, identification of the monitoring location (*e.g.*, unique monitoring location or heat exchange system ID number), the measured total strippable hydrocarbon concentration or total hydrocarbon mass emissions rate, the date the leak was first identified, and, if applicable, the date the source of the leak was identified;

(iv) For leaks that were repaired during the reporting period (including delayed repairs), identification of the monitoring location associated with the repaired leak, the total strippable hydrocarbon concentration or total hydrocarbon mass emissions rate measured during re-monitoring to verify repair, and the re-monitoring date (*i.e.*, the effective date of repair); and

(v) For each delayed repair, identification of the monitoring location associated with the leak for which repair is delayed, the date when the delay of repair began, the date the repair is expected to be completed (if the leak is not repaired during the reporting period), the total strippable hydrocarbon concentration or total hydrocarbon mass emissions rate and date of each monitoring event conducted on the delayed repair during the reporting period, and an estimate in pounds of the potential total hydrocarbon emissions over the reporting period associated with the delayed repair.

(17) For process vents and storage tanks in ethylene oxide service subject to the requirements of §63.2493, the compliance report must include:

(i) The periods specified in §63.2525(s)(4). Indicate the date and start and end times for each period.

(ii) If you obtain an instrument reading greater than 500 ppmv of a leak when monitoring a pressure vessel in accordance with §63.2493(c)(2), submit a copy of the records specified in §63.2525(s)(5)(ii).

(iii) Reports for equipment subject to the requirements of §63.2493 as specified in paragraph (e)(9) of this section.

(f) *Performance test reports*. Beginning no later than October 13, 2020, you must submit performance test reports in accordance with this paragraph (f). Unless otherwise specified in this subpart, within 60 days after the date of completing each performance test required by this subpart, you must submit the results of the performance test following the procedures specified in

sfrattini on LAPJZKW1R2 with $$_JOB
VerDate Sep<11>2014 09:16 Apr 04, 2023 Jkt 256165 PO 00000 Frm 00485 Fmt 8010 Sfmt 8010 Q:\40\256165.XXX PC31

paragraphs (f)(1) through (3) of this section.

(1) *Data collected using test methods supported by the EPA's Electronic Reporting Tool (ERT) as listed on the EPA's ERT website (https://www.epa.gov/electronic-reporting-air-emissions/electronic-reporting-tool-ert) at the time of the test.* Submit the results of the performance test to the EPA via CEDRI, which can be accessed through the EPA's CDX (*https://cdx.epa.gov/*). The data must be submitted in a file format generated through the use of the EPA's ERT. Alternatively, you may submit an electronic file consistent with the extensible markup language (XML) schema listed on the EPA's ERT website.

(2) *Data collected using test methods that are not supported by the EPA's ERT as listed on the EPA's ERT website at the time of the test.* The results of the performance test must be included as an attachment in the ERT or an alternate electronic file consistent with the XML schema listed on the EPA's ERT website. Submit the ERT generated package or alternative file to the EPA via CEDRI.

(3) *Confidential business information (CBI).* The EPA will make all the information submitted through CEDRI available to the public without further notice to you. Do not use CEDRI to submit information you claim as CBI. Anything submitted using CEDRI cannot later be claimed to be CBI. Although we do not expect persons to assert a claim of CBI, if you wish to assert a CBI claim, you must submit a complete file, including information claimed to be CBI, to the EPA. The file must be generated through the use of the EPA's ERT or an alternate electronic file consistent with the XML schema listed on the EPA's ERT website. Submit the file on a compact disc, flash drive, or other commonly used electronic storage medium and clearly mark the medium as CBI. Mail the electronic medium to U.S. Environmental Protection Agency, Office of Air Quality Planning and Standards, Sector Policies and Programs Division, CORE CBI Office, U.S. EPA Mailroom (C404–02), Attention: Group Leader, Measurement Policy Group, 4930 Old Page Rd., Durham, NC 27703. The same file with the CBI omitted must be submitted to the EPA via the EPA's CDX as described in paragraph (f)(1) and (2) of this section. All CBI claims must be asserted at the time of submission. Furthermore, under CAA section 114(c) emissions data is not entitled to confidential treatment, and the EPA is required to make emissions data available to the public. Thus, emissions data will not be protected as CBI and will be made publicly available.

(g) *CEMS relative accuracy test audit (RATA) Performance evaluation reports.* Beginning no later than October 13, 2020, you must start submitting CEMS RATA performance evaluation reports in accordance with this paragraph (g). Unless otherwise specified in this subpart, within 60 days after the date of completing each continuous monitoring system performance evaluation (as defined in § 63.2), you must submit the results of the performance evaluation following the procedures specified in paragraphs (g)(1) through (3) of this section.

(1) *Performance evaluations of CMS measuring RATA pollutants that are supported by the EPA's ERT as listed on the EPA's ERT website at the time of the evaluation.* Submit the results of the performance evaluation to the EPA via CEDRI, which can be accessed through the EPA's CDX. The data must be submitted in a file format generated through the use of the EPA's ERT. Alternatively, you may submit an electronic file consistent with the XML schema listed on the EPA's ERT website.

(2) *Performance evaluations of CMS measuring RATA pollutants that are not supported by the EPA's ERT as listed on the EPA's ERT website at the time of the evaluation.* The results of the performance evaluation must be included as an attachment in the ERT or an alternate electronic file consistent with the XML schema listed on the EPA's ERT website. Submit the ERT generated package or alternative file to the EPA via CEDRI.

(3) *Confidential business information (CBI).* The EPA will make all the information submitted through CEDRI available to the public without further notice to you. Do not use CEDRI to submit information you claim as CBI.

sfrattini on LAPJZKW1R2 with $$_JOB
VerDate Sep<11>2014 09:16 Apr 04, 2023 Jkt 256165 PO 00000 Frm 00486 Fmt 8010 Sfmt 8010 Q:\40\256165.XXX PC31

Anything submitted using CEDRI cannot later be claimed to be CBI. Although we do not expect persons to assert a claim of CBI, if you wish to assert a CBI claim, you must submit a complete file, including information claimed to be CBI, to the EPA. The file must be generated through the use of the EPA's ERT or an alternate electronic file consistent with the XML schema listed on the EPA's ERT website. Submit the file on a compact disc, flash drive, or other commonly used electronic storage medium and clearly mark the medium as CBI. Mail the electronic medium to U.S. Environmental Protection Agency, Office of Air Quality Planning and Standards, Sector Policies and Programs Division, CORE CBI Office, U.S. EPA Mailroom (C404–02), Attention: Group Leader, Measurement Policy Group, 4930 Old Page Rd., Durham, NC 27703. The same file with the CBI omitted must be submitted to the EPA via the EPA's CDX as described in paragraphs (g)(1) and (2) of this section. All CBI claims must be asserted at the time of submission. Furthermore, under CAA section 114(c) emissions data is not entitled to confidential treatment, and the EPA is required to make emissions data available to the public. Thus, emissions data will not be protected as CBI and will be made publicly available.

(h) *Claims of EPA system outage.* If you are required to electronically submit a report through CEDRI in the EPA's CDX, you may assert a claim of EPA system outage for failure to timely comply with that reporting requirement. To assert a claim of EPA system outage, you must meet the requirements outlined in paragraphs (h)(1) through (7) of this section.

(1) You must have been or will be precluded from accessing CEDRI and submitting a required report within the time prescribed due to an outage of either the EPA's CEDRI or CDX systems.

(2) The outage must have occurred within the period of time beginning five business days prior to the date that the submission is due.

(3) The outage may be planned or unplanned.

(4) You must submit notification to the Administrator in writing as soon as possible following the date you first knew, or through due diligence should have known, that the event may cause or has caused a delay in reporting.

(5) You must provide to the Administrator a written description identifying:

(i) The date(s) and time(s) when CDX or CEDRI was accessed and the system was unavailable;

(ii) A rationale for attributing the delay in reporting beyond the regulatory deadline to EPA system outage;

(iii) A description of measures taken or to be taken to minimize the delay in reporting; and

(iv) The date by which you propose to report, or if you have already met that reporting requirement at the time of the notification, the date you reported.

(6) The decision to accept the claim of EPA system outage and allow an extension to the reporting deadline is solely within the discretion of the Administrator.

(7) In any circumstance, the report must be submitted electronically as soon as possible after the outage is resolved.

(i) *Claims of force majeure.* If you are required to electronically submit a report through CEDRI in the EPA's CDX, you may assert a claim of *force majeure* for failure to timely comply with that reporting requirement. To assert a claim of *force majeure*, you must meet the requirements outlined in paragraphs (i)(1) through (5) of this section.

(1) You may submit a claim if a *force majeure* event is about to occur, occurs, or has occurred or there are lingering effects from such an event within the period of time beginning five business days prior to the date the submission is due. For the purposes of this paragraph (i)(1), a *force majeure* event is defined as an event that will be or has been caused by circumstances beyond the control of the affected facility, its contractors, or any entity controlled by the affected facility that prevents you from complying with the requirement to submit a report electronically within the time period prescribed. Examples of such events are acts of nature (*e.g.*, hurricanes, earthquakes, or floods), acts of war or terrorism, or equipment failure or safety hazard beyond the control of the affected facility (*e.g.*, large scale power outage).

sfrattini on LAPJZKW1R2 with $$_JOB
VerDate Sep<11>2014 09:16 Apr 04, 2023 Jkt 256165 PO 00000 Frm 00487 Fmt 8010 Sfmt 8010 Q:\40\256165.XXX PC31

(2) You must submit notification to the Administrator in writing as soon as possible following the date you first knew, or through due diligence should have known, that the event may cause or has caused a delay in reporting.

(3) You must provide to the Administrator:

(i) A written description of the *force majeure* event;

(ii) A rationale for attributing the delay in reporting beyond the regulatory deadline to the *force majeure* event;

(iii) A description of measures taken or to be taken to minimize the delay in reporting; and

(iv) The date by which you propose to report, or if you have already met the reporting requirement at the time of the notification, the date you reported.

(4) The decision to accept the claim of *force majeure* and allow an extension to the reporting deadline is solely within the discretion of the Administrator.

(5) In any circumstance, the reporting must occur as soon as possible after the *force majeure* event occurs.

[68 FR 63888, Nov. 10, 2003, as amended at 70 FR 38560, July 1, 2005; 71 FR 40336, July 14, 2006; 85 FR 49150, Aug. 12, 2020]

§ 63.2525 What records must I keep?

You must keep the records specified in paragraphs (a) through (t) of this section.

(a) Except as specified in §§ 63.2450(e)(4), 63.2480(f), and 63.2485(p) and (q) and paragraph (t) of this section, each applicable record required by subpart A of this part and in referenced subparts F, G, SS, UU, WW, and GGG of this part and in referenced subpart F of 40 CFR part 65.

(b) Records of each operating scenario as specified in paragraphs (b)(1) through (8) of this section.

(1) A description of the process and the type of process equipment used.

(2) An identification of related process vents, including their associated emissions episodes if not complying with the alternative standard in § 63.2505; wastewater point of determination (POD); storage tanks; and transfer racks.

(3) The applicable control requirements of this subpart, including the level of required control, and for vents, the level of control for each vent.

(4) The control device or treatment process used, as applicable, including a description of operating and/or testing conditions for any associated control device.

(5) The process vents, wastewater POD, transfer racks, and storage tanks (including those from other processes) that are simultaneously routed to the control device or treatment process(s).

(6) The applicable monitoring requirements of this subpart and any parametric level that assures compliance for all emissions routed to the control device or treatment process.

(7) Calculations and engineering analyses required to demonstrate compliance.

(8) For reporting purposes, a change to any of these elements not previously reported, except for paragraph (b)(5) of this section, constitutes a new operating scenario.

(c) A schedule or log of operating scenarios for processes with batch vents from batch operations updated each time a different operating scenario is put into effect.

(d) The information specified in paragraphs (d)(1) and (2) of this section for Group 1 batch process vents in compliance with a percent reduction emission limit in Table 2 to this subpart if some of the vents are controlled to less the percent reduction requirement.

(1) Records of whether each batch operated was considered a standard batch.

(2) The estimated uncontrolled and controlled emissions for each batch that is considered to be a nonstandard batch.

(e) The information specified in paragraph (e)(2), (3), or (4) of this section, as applicable, for each process with Group 2 batch process vents or uncontrolled hydrogen halide and halogen HAP emissions from the sum of all batch and continuous process vents less than 1,000 lb/yr. No records are required for situations described in paragraph (e)(1) of this section.

(1) No records are required if you documented in your notification of compliance status report that the MCPU meets any of the situations described

sfrattini on LAPJZKW1R2 with $$_JOB
VerDate Sep<11>2014 09:16 Apr 04, 2023 Jkt 256165 PO 00000 Frm 00488 Fmt 8010 Sfmt 8010 Q:\40\256165.XXX PC31

in paragraph (e)(1)(i), (ii), or (iii) of this section.

(i) The MCPU does not process, use, or generate HAP.

(ii) You control the Group 2 batch process vents using a flare that meets the requirements of § 63.987 or § 63.2450(e)(5), as applicable.

(iii) You control the Group 2 batch process vents using a control device for which your determination of worst case for initial compliance includes the contribution of all Group 2 batch process vents.

(2) If you documented in your notification of compliance status report that an MCPU has Group 2 batch process vents because the non-reactive organic HAP is the only HAP and usage is less than 10,000 lb/yr, as specified in § 63.2460(b)(7), you must keep records of the amount of HAP material used, and calculate the daily rolling annual sum of the amount used no less frequently than monthly. If a record indicates usage exceeds 10,000 lb/yr, you must estimate emissions for the preceding 12 months based on the number of batches operated and the estimated emissions for a standard batch, and you must begin recordkeeping as specified in paragraph (e)(4) of this section. After 1 year, you may revert to recording only usage if the usage during the year is less than 10,000 lb.

(3) If you documented in your notification of compliance status report that total uncontrolled organic HAP emissions from the batch process vents in an MCPU will be less than 1,000 lb/yr for the anticipated number of standard batches, then you must keep records of the number of batches operated and calculate a daily rolling annual sum of batches operated no less frequently than monthly. If the number of batches operated results in organic HAP emissions that exceed 1,000 lb/yr, you must estimate emissions for the preceding 12 months based on the number of batches operated and the estimated emissions for a standard batch, and you must begin recordkeeping as specified in paragraph (e)(4) of this section. After 1 year, you may revert to recording only the number of batches if the number of batches operated during the year results in less than 1,000 lb of organic HAP emissions.

(4) If you meet none of the conditions specified in paragraphs (e)(1) through (3) of this section, you must keep records of the information specified in paragraphs (e)(4)(i) through (iv) of this section.

(i) A record of the day each batch was completed and/or the operating hours per day for continuous operations with hydrogen halide and halogen emissions.

(ii) A record of whether each batch operated was considered a standard batch.

(iii) The estimated uncontrolled and controlled emissions for each batch that is considered to be a nonstandard batch.

(iv) Records of the daily 365-day rolling summations of emissions, or alternative records that correlate to the emissions (e.g., number of batches), calculated no less frequently than monthly.

(f) A record of each time a safety device is opened to avoid unsafe conditions in accordance with § 63.2450(p).

(g) Records of the results of each CPMS calibration check and the maintenance performed, as specified in § 63.2450(k)(1).

(h) Except as specified in paragraph (l) of this section, for each CEMS, you must keep records of the date and time that each deviation started and stopped, and whether the deviation occurred during a period of startup, shutdown, or malfunction or during another period.

(i) For each PUG, you must keep records specified in paragraphs (i)(1) through (5) of this section.

(1) Descriptions of the MCPU and other process units in the initial PUG required by § 63.2535(l)(1)(v).

(2) Rationale for including each MCPU and other process unit in the initial PUG (*i.e.*, identify the overlapping equipment between process units) required by § 63.2535(l)(1)(v).

(3) Calculations used to determine the primary product for the initial PUG required by § 63.2535(l)(2)(iv).

(4) Descriptions of process units added to the PUG after the creation date and rationale for including the additional process units in the PUG as required by § 63.2535(l)(1)(v).

sfrattini on LAPJZKW1R2 with $$_JOB
VerDate Sep<11>2014 09:16 Apr 04, 2023 Jkt 256165 PO 00000 Frm 00489 Fmt 8010 Sfmt 8010 Q:\40\256165.XXX PC31

(5) The calculation of each primary product redetermination required by § 63.2535(l)(2)(iv).

(j) In the SSMP required by § 63.6(e)(3) of subpart A, you are not required to include Group 2 emission points, unless those emission points are used in an emissions average. For equipment leaks, the SSMP requirement is limited to control devices and is optional for other equipment. On and after August 12, 2023, this paragraph (j) no longer applies.

(k) For each bag leak detector used to monitor PM HAP emissions from a fabric filter, maintain records of any bag leak detection alarm, including the date and time, with a brief explanation of the cause of the alarm and the corrective action taken.

(l) Beginning no later than the compliance dates specified in § 63.2445(g), paragraph (h) of this section no longer applies. Instead, for each deviation from an emission limit, operating limit, or work practice standard, you must keep a record of the information specified in paragraph (l)(1) through (3) of this section. The records shall be maintained as specified in § 63.10(b)(1) of subpart A.

(1) In the event that an affected unit does not meet an applicable standard, record the number of deviations. For each deviation record the date, time, and duration of each deviation.

(2) For each deviation from an applicable standard, record and retain a list of the affected sources or equipment, an estimate of the quantity of each regulated pollutant emitted over any emission limit and a description of the method used to estimate the emissions.

(3) Record actions taken to minimize emissions in accordance with § 63.2450(u) and any corrective actions taken to return the affected unit to its normal or usual manner of operation.

(m) For each flare subject to the requirements in § 63.2450(e)(5), you must keep records specified in paragraphs (m)(1) through (14) of this section in lieu of the information required in § 63.998(a)(1) of subpart SS.

(1) Retain records of the output of the monitoring device used to detect the presence of a pilot flame or flare flame as required in § 63.670(b) of subpart CC and the presence of a pilot flame as required in § 63.2450(e)(5)(viii)(D) for a minimum of 2 years. Retain records of each 15-minute block during which there was at least one minute that no pilot flame or flare flame is present when regulated material is routed to a flare for a minimum of 5 years. For a pressure-assisted multi-point flare that uses cross-lighting, retain records of each 15-minute block during which there was at least one minute that no pilot flame is present on each stage when regulated material is routed to a flare for a minimum of 5 years. You may reduce the collected minute-by-minute data to a 15-minute block basis with an indication of whether there was at least one minute where no pilot flame or flare flame was present.

(2) Retain records of daily visible emissions observations as specified in paragraphs (m)(2)(i) through (iv) of this section, as applicable, for a minimum of 3 years.

(i) To determine when visible emissions observations are required, the record must identify all periods when regulated material is vented to the flare.

(ii) If visible emissions observations are performed using Method 22 of 40 CFR part 60, appendix A–7, then the record must identify whether the visible emissions observation was performed, the results of each observation, total duration of observed visible emissions, and whether it was a 5-minute or 2-hour observation. Record the date and start time of each visible emissions observation.

(iii) If a video surveillance camera is used pursuant to § 63.670(h)(2) of subpart CC, then the record must include all video surveillance images recorded, with time and date stamps.

(iv) For each 2 hour period for which visible emissions are observed for more than 5 minutes in 2 consecutive hours, then the record must include the date and start and end time of the 2 hour period and an estimate of the cumulative number of minutes in the 2 hour period for which emissions were visible.

(3) The 15-minute block average cumulative flows for flare vent gas and, if applicable, total steam, perimeter assist air, and premix assist air specified

sfrattini on LAPJZKW1R2 with $$_JOB
VerDate Sep<11>2014 09:16 Apr 04, 2023 Jkt 256165 PO 00000 Frm 00490 Fmt 8010 Sfmt 8010 Q:\40\256165.XXX PC31

to be monitored under §63.670(i) of subpart CC, along with the date and time interval for the 15-minute block. If multiple monitoring locations are used to determine cumulative vent gas flow, total steam, perimeter assist air, and premix assist air, then retain records of the 15-minute block average flows for each monitoring location for a minimum of 2 years, and retain the 15-minute block average cumulative flows that are used in subsequent calculations for a minimum of 5 years. If pressure and temperature monitoring is used, then retain records of the 15-minute block average temperature, pressure, and molecular weight of the flare vent gas or assist gas stream for each measurement location used to determine the 15-minute block average cumulative flows for a minimum of 2 years, and retain the 15-minute block average cumulative flows that are used in subsequent calculations for a minimum of 5 years.

(4) The flare vent gas compositions specified to be monitored under §63.670(j) of subpart CC. Retain records of individual component concentrations from each compositional analysis for a minimum of 2 years. If an NHVvg analyzer is used, retain records of the 15-minute block average values for a minimum of 5 years.

(5) Each 15-minute block average operating parameter calculated following the methods specified in §63.670(k) through (n) of subpart CC, as applicable.

(6) All periods during which operating values are outside of the applicable operating limits specified in §§63.670(d) through (f) of subpart CC and 63.2450(e)(5)(viii) when regulated material is being routed to the flare.

(7) All periods during which you do not perform flare monitoring according to the procedures in §63.670(g) through (j) of subpart CC.

(8) For pressure-assisted multi-point flares, if a stage of burners on the flare uses cross-lighting, then a record of any changes made to the distance between burners.

(9) For pressure-assisted multi-point flares, all periods when the pressure monitor(s) on the main flare header show burners are operating outside the range of the manufacturer's specifications. Indicate the date and time for each period, the pressure measurement, the stage(s) and number of burners affected, and the range of manufacturer's specifications.

(10) For pressure-assisted multi-point flares, all periods when the staging valve position indicator monitoring system indicates a stage of the pressure-assisted multi-point flare should not be in operation and when a stage of the pressure-assisted multi-point flare should be in operation and is not. Indicate the date and time for each period, whether the stage was supposed to be open, but was closed or vice versa, and the stage(s) and number of burners affected.

(11) Records of periods when there is flow of vent gas to the flare, but when there is no flow of regulated material to the flare, including the start and stop time and dates of periods of no regulated material flow.

(12) Records when the flow of vent gas exceeds the smokeless capacity of the flare, including start and stop time and dates of the flaring event.

(13) Records of the root cause analysis and corrective action analysis conducted as required in §§63.670(o)(3) of subpart CC and 63.2450(e)(5)(v), including an identification of the affected flare, the date and duration of the event, a statement noting whether the event resulted from the same root cause(s) identified in a previous analysis and either a description of the recommended corrective action(s) or an explanation of why corrective action is not necessary under §63.670(o)(5)(i) of subpart CC.

(14) For any corrective action analysis for which implementation of corrective actions are required in §63.670(o)(5) of subpart CC, a description of the corrective action(s) completed within the first 45 days following the discharge and, for action(s) not already completed, a schedule for implementation, including proposed commencement and completion dates.

(n) For each flow event from a bypass line subject to the requirements in §63.2450(e)(6), you must maintain records sufficient to determine whether or not the detected flow included flow requiring control. For each flow event from a bypass line requiring control

sfrattini on LAPJZKW1R2 with $$_JOB
VerDate Sep<11>2014 09:16 Apr 04, 2023 Jkt 256165 PO 00000 Frm 00491 Fmt 8010 Sfmt 8010 Q:\40\256165.XXX PC31

that is released either directly to the atmosphere or to a control device not meeting the requirements specified in Tables 1 through 7 to this subpart, you must include an estimate of the volume of gas, the concentration of organic HAP in the gas and the resulting emissions of organic HAP that bypassed the control device using process knowledge and engineering estimates.

(o) For each nonregenerative adsorber and regenerative adsorber that is regenerated offsite subject to the requirements in § 63.2450(e)(7), you must keep the applicable records specified in paragraphs (o)(1) through (4) of this section.

(1) Outlet HAP or TOC concentration for each adsorber bed measured during each performance test conducted.

(2) Daily outlet HAP or TOC concentration.

(3) Date and time you last replaced the adsorbent.

(4) If you conduct monitoring less frequently than daily as specified in § 63.2450(e)(7)(iii)(B), you must record the average life of the bed.

(p) For each maintenance vent opening subject to the requirements in § 63.2450(v), you must keep the applicable records specified in paragraphs (p)(1) through (5) of this section.

(1) You must maintain standard site procedures used to deinventory equipment for safety purposes (*e.g.*, hot work or vessel entry procedures) to document the procedures used to meet the requirements in § 63.2450(v). The current copy of the procedures must be retained and available on-site at all times. Previous versions of the standard site procedures, as applicable, must be retained for five years.

(2) If complying with the requirements of § 63.2450(v)(1)(i) and the lower explosive limit at the time of the vessel opening exceeds 10 percent, identification of the maintenance vent, the process units or equipment associated with the maintenance vent, the date of maintenance vent opening, and the lower explosive limit at the time of the vessel opening.

(3) If complying with the requirements of § 63.2450(v)(1)(ii) and either the vessel pressure at the time of the vessel opening exceeds 5 psig or the lower explosive limit at the time of the active purging was initiated exceeds 10 percent, identification of the maintenance vent, the process units or equipment associated with the maintenance vent, the date of maintenance vent opening, the pressure of the vessel or equipment at the time of discharge to the atmosphere and, if applicable, the lower explosive limit of the vapors in the equipment when active purging was initiated.

(4) If complying with the requirements of § 63.2450(v)(1)(iii), records of the estimating procedures used to determine the total quantity of VOC in the equipment and the type and size limits of equipment that contain less than 50 pounds of VOC at the time of maintenance vent opening. For each maintenance vent opening that contains greater than 50 pounds of VOC for which the deinventory procedures specified in paragraph (p)(1) of this section are not followed or for which the equipment opened exceeds the type and size limits established in the records specified in this paragraph (p)(4), records that identify the maintenance vent, the process units or equipment associated with the maintenance vent, the date of maintenance vent opening, and records used to estimate the total quantity of VOC in the equipment at the time the maintenance vent was opened to the atmosphere.

(5) If complying with the requirements of § 63.2450(v)(1)(iv), identification of the maintenance vent, the process units or equipment associated with the maintenance vent, records documenting actions taken to comply with other applicable alternatives and why utilization of this alternative was required, the date of maintenance vent opening, the equipment pressure and lower explosive limit of the vapors in the equipment at the time of discharge, an indication of whether active purging was performed and the pressure of the equipment during the installation or removal of the blind if active purging was used, the duration the maintenance vent was open during the blind installation or removal process, and records used to estimate the total quantity of VOC in the equipment at the time the maintenance vent was opened to the atmosphere for each applicable maintenance vent opening.

sfrattini on LAPJZKW1R2 with $$_JOB
VerDate Sep<11>2014 09:16 Apr 04, 2023 Jkt 256165 PO 00000 Frm 00492 Fmt 8010 Sfmt 8010 Q:\40\256165.XXX PC31

(q) For each pressure relief device subject to the pressure release management work practice standards in §63.2480(e), you must keep the records specified in paragraphs (q)(1) through (3) of this section.

(1) Records of the prevention measures implemented as required in §63.2480(e)(3)(ii).

(2) Records of the number of releases during each calendar year and the number of those releases for which the root cause was determined to be a *force majeure* event. Keep these records for the current calendar year and the past 5 calendar years.

(3) For each release to the atmosphere, you must keep the records specified in paragraphs (q)(3)(i) through (iv) of this section.

(i) The start and end time and date of each pressure release to the atmosphere.

(ii) Records of any data, assumptions, and calculations used to estimate of the mass quantity of each organic HAP released during the event.

(iii) Records of the root cause analysis and corrective action analysis conducted as required in §63.2480(e)(3)(iii), including an identification of the affected facility, a statement noting whether the event resulted from the same root cause(s) identified in a previous analysis and either a description of the recommended corrective action(s) or an explanation of why corrective action is not necessary under §63.2480(e)(7)(i).

(iv) For any corrective action analysis for which implementation of corrective actions are required in §63.2480(e)(7), a description of the corrective action(s) completed within the first 45 days following the discharge and, for action(s) not already completed, a schedule for implementation, including proposed commencement and completion dates.

(r) For each heat exchange system, beginning no later than the compliance dates specified in §63.2445(g), the recordkeeping requirements of §63.104(f)(1) no longer apply; instead, you must keep records in paragraphs (r)(1) through (4) of this section.

(1) Monitoring data required by §63.2490(d) that indicate a leak, the date the leak was detected, or, if applicable, the basis for determining there is no leak.

(2) The dates of efforts to repair leaks.

(3) The method or procedures used to confirm repair of a leak and the date the repair was confirmed.

(4) Documentation of delay of repair as specified in paragraphs (r)(4)(i) through (iv) of this section.

(i) The reason(s) for delaying repair.

(ii) A schedule for completing the repair as soon as practical.

(iii) The date and concentration or mass emissions rate of the leak as first identified and the results of all subsequent monitoring events during the delay of repair.

(iv) An estimate of the potential total hydrocarbon emissions from the leaking heat exchange system or heat exchanger for each required delay of repair monitoring interval following the procedures in paragraphs (r)(4)(iv)(A) through (C) of this section.

(A) If you comply with the total strippable hydrocarbon concentration leak action level, as specified in §63.2490(d)(1)(iv), you must calculate the mass emissions rate by complying with the requirements of §63.2490(d)(1)(iii)(B) or by determining the mass flow rate of the cooling water at the monitoring location where the leak was detected. If the monitoring location is an individual cooling tower riser, determine the total cooling water mass flow rate to the cooling tower. Cooling water mass flow rates may be determined using direct measurement, pump curves, heat balance calculations, or other engineering methods. If you determine the mass flow rate of the cooling water, calculate the mass emissions rate by converting the stripping gas leak concentration (in ppmv as methane) to an equivalent liquid concentration, in parts per million by weight (ppmw), using equation 7–1 from ''Air Stripping Method (Modified El Paso Method) for Determination of Volatile Organic Compound Emissions from Water Sources'' (incorporated by reference—see §63.14) and multiply the equivalent liquid concentration by the mass flow rate of the cooling water.

sfrattini on LAPJZKW1R2 with $$_JOB
VerDate Sep<11>2014 09:16 Apr 04, 2023 Jkt 256165 PO 00000 Frm 00493 Fmt 8010 Sfmt 8010 Q:\40\256165.XXX PC31

(B) For delay of repair monitoring intervals prior to repair of the leak, calculate the potential total hydrocarbon emissions for the leaking heat exchange system or heat exchanger for the monitoring interval by multiplying the mass emissions rate, determined in § 63.2490(d)(1)(iii)(B) or paragraph (r)(4)(iv)(A) of this section, by the duration of the delay of repair monitoring interval. The duration of the delay of repair monitoring interval is the time period starting at midnight on the day of the previous monitoring event or at midnight on the day the repair would have had to be completed if the repair had not been delayed, whichever is later, and ending at midnight of the day the of the current monitoring event.

(C) For delay of repair monitoring intervals ending with a repaired leak, calculate the potential total hydrocarbon emissions for the leaking heat exchange system or heat exchanger for the final delay of repair monitoring interval by multiplying the duration of the final delay of repair monitoring interval by the mass emissions rate determined for the last monitoring event prior to the re-monitoring event used to verify the leak was repaired. The duration of the final delay of repair monitoring interval is the time period starting at midnight of the day of the last monitoring event prior to re-monitoring to verify the leak was repaired and ending at the time of the re-monitoring event that verified that the leak was repaired.

(s) For process vents and storage tanks in ethylene oxide service subject to the requirements of § 63.2493, you must keep the records specified in paragraphs (s)(1) through (5) of this section in addition to those records specified in paragraph (a) of this section. Records for equipment in ethylene oxide service subject to the requirements of § 63.2493 are specified in paragraph (a) of this section.

(1) For process vents, include all uncontrolled, undiluted ethylene oxide concentration measurements, and the calculations you used to determine the total uncontrolled ethylene oxide mass emission rate for the sum of all vent gas streams.

(2) For storage tanks, records of the concentration of ethylene oxide of the fluid stored in each storage tank.

(3) For equipment, records of the percent ethylene oxide content of the process fluid and the method used to determine it.

(4) If you vent emissions through a closed-vent system to a non-flare control device, then you must keep records of all periods during which operating values are outside of the applicable operating limits specified in § 63.2493(b)(4) through (6) when regulated material is being routed to the non-flare control device. The record must specify the operating parameter, the applicable limit, and the highest (for maximum operating limits) or lowest (for minimum operating limits) value recorded during the period.

(5) For pressure vessels subject to § 63.2493(c), records as specified in paragraphs (s)(5)(i) through (iv) of this section.

(i) The date of each performance test conducted according to § 63.2493(c)(2).

(ii) The instrument reading of each performance test conducted according to § 63.2493(c)(2), including the following:

(A) Date each defect was detected.

(B) Date of the next performance test that shows the instrument reading is less than 500 ppmv.

(C) Start and end dates of each period after the date in paragraph (s)(5)(ii)(A) of this section when the pressure vessel was completely empty.

(D) Estimated emissions from each defect.

(t) Any records required to be maintained by this part that are submitted electronically via the EPA's CEDRI may be maintained in electronic format. This ability to maintain electronic copies does not affect the requirement for facilities to make records, data, and reports available upon request to a delegated air agency or the EPA as part of an on-site compliance evaluation.

(u) Beginning no later than the compliance dates specified in § 63.2445(g), the referenced provisions specified in paragraphs (u)(1) through (8) of this section do not apply when demonstrating compliance with paragraph (a) of this section.

sfrattini on LAPJZKW1R2 with $$_JOB
VerDate Sep<11>2014 09:16 Apr 04, 2023 Jkt 256165 PO 00000 Frm 00494 Fmt 8010 Sfmt 8010 Q:\40\256165.XXX PC31

(1) Section 63.103(c)(2)(i) of subpart F.

(2) Section 63.103(c)(2)(ii) of subpart F.

(3) The phrase ''start-up, shutdown and malfunction and'' from §63.103(c)(3) of subpart F.

(4) The phrase ''other than startups, shutdowns, or malfunctions (*e.g.*, a temperature reading of −200 °C on a boiler),'' from §63.152(g)(1)(i) of subpart G.

(5) The phrase ''other than a startup, shutdown, or malfunction'' from §63.152(g)(1)(ii)(C) of subpart G.

(6) The phrase ''other than startups, shutdowns, or malfunctions'' from §63.152(g)(1)(iii) of subpart G.

(7) The phrase ''other than a startup, shutdown, or malfunction'' from §63.152(g)(2)(iii) of subpart G.

(8) Section 63.152(g)(2)(iv)(A) of subpart G.

[68 FR 63888, Nov. 10, 2003, as amended at 70 FR 38560, July 1, 2005; 71 FR 40337, July 14, 2006; 85 FR 49155, Aug. 12, 2020]

OTHER REQUIREMENTS AND INFORMATION

§63.2535 What compliance options do I have if part of my plant is subject to both this subpart and another subpart?

For any equipment, emission stream, or wastewater stream not subject to §63.2493 but subject to other provisions of both this subpart and another subpart, you may elect to comply only with the provisions as specified in paragraphs (a) through (l) of this section. You also must identify the subject equipment, emission stream, or wastewater stream, and the provisions with which you will comply, in your notification of compliance status report required by §63.2520(d).

(a) *Compliance with other subparts of this part 63.* (1) If you have an MCPU that includes a batch process vent that also is part of a CMPU as defined in subparts F and G of this part 63, you must comply with the emission limits; operating limits; work practice standards; and the compliance, monitoring, reporting, and recordkeeping requirements for batch process vents in this subpart, and you must continue to comply with the requirements in subparts F, G, and H of this part 63 that are applicable to the CMPU and associated equipment.

(2) After the compliance dates specified in §63.2445, at an offsite reloading or cleaning facility subject to §63.1253(f), as referenced from §63.2470(e), compliance with the monitoring, recordkeeping, and reporting provisions of any other subpart of this part 63 constitutes compliance with the monitoring, recordkeeping, and reporting provisions of §63.1253(f)(7)(ii) or §63.1253(f)(7)(iii). You must identify in your notification of compliance status report required by §63.2520(d) the subpart of this part 63 with which the owner or operator of the offsite reloading or cleaning facility complies.

(b) *Compliance with 40 CFR parts 264 and 265, subparts AA, BB, and/or CC.* (1) After the compliance dates specified in §63.2445, if a control device that you use to comply with this subpart is also subject to monitoring, recordkeeping, and reporting requirements in 40 CFR part 264, subpart AA, BB, or CC; or the monitoring and recordkeeping requirements in 40 CFR part 265, subpart AA, BB, or CC; and you comply with the periodic reporting requirements under 40 CFR part 264, subpart AA, BB, or CC that would apply to the device if your facility had final-permitted status, you may elect to comply either with the monitoring, recordkeeping, and reporting requirements of this subpart; or with the monitoring and recordkeeping requirements in 40 CFR part 264 or 265 and the reporting requirements in 40 CFR part 264, as described in this paragraph (b)(1), which constitute compliance with the monitoring, recordkeeping, and reporting requirements of this subpart. If you elect to comply with the monitoring, recordkeeping, and reporting requirements in 40 CFR parts 264 and/or 265, you must report the information described in §63.2520(e).

(2) After the compliance dates specified in §63.2445, if you have an affected source with equipment that is also subject to 40 CFR part 264, subpart BB, or to 40 CFR part 265, subpart BB, then compliance with the recordkeeping and reporting requirements of 40 CFR parts 264 and/or 265 may be used to comply with the recordkeeping and reporting

sfrattini on LAPJZKW1R2 with $$_JOB
VerDate Sep<11>2014 09:16 Apr 04, 2023 Jkt 256165 PO 00000 Frm 00495 Fmt 8010 Sfmt 8010 Q:\40\256165.XXX PC31

requirements of this subpart, to the extent that the requirements of 40 CFR parts 264 and/or 265 duplicate the requirements of this subpart.

(c) *Compliance with 40 CFR part 60, subpart Kb and 40 CFR part 61, subpart Y.* After the compliance dates specified in § 63.2445, you are in compliance with the provisions of this subpart FFFF for any storage tank that is assigned to an MCPU and that is both controlled with a floating roof and in compliance with the provisions of either 40 CFR part 60, subpart Kb, or 40 CFR part 61, subpart Y. You are in compliance with this subpart FFFF if you have a storage tank with a fixed roof, closed-vent system, and control device in compliance with the provisions of either 40 CFR part 60, subpart Kb, or 40 CFR part 61, subpart Y, except that you must comply with the monitoring, recordkeeping, and reporting requirements in this subpart FFFF. Alternatively, if a storage tank assigned to an MCPU is subject to control under 40 CFR part 60, subpart Kb, or 40 CFR part 61, subpart Y, you may elect to comply only with the requirements for Group 1 storage tanks in this subpart FFFF.

(d) *Compliance with subpart I, GGG, or MMM of this part.* After the compliance dates specified in § 63.2445, if you have an affected source with equipment subject to subpart I, GGG, or MMM of this part, you may elect to comply with the provisions of subpart H, GGG, or MMM of this part, respectively, for all such equipment, except the affirmative defense requirements in subparts GGG and MMM no longer apply.

(e) *Compliance with subpart GGG of this part 63 for wastewater.* After the compliance dates specified in § 63.2445, if you have an affected source subject to this subpart and you have an affected source that generates wastewater streams that meet the applicability thresholds specified in § 63.1256, you may elect to comply with the provisions of this subpart FFFF for all such wastewater streams.

(f) *Compliance with subpart MMM of this part 63 for wastewater.* After the compliance dates specified in § 63.2445, if you have an affected source subject to this subpart, and you have an affected source that generates wastewater streams that meet the applicability thresholds specified in § 63.1362(d), you may elect to comply with the provisions of this subpart FFFF for all such wastewater streams (except that the 99 percent reduction requirement for streams subject to § 63.1362(d)(10) still applies).

(g) *Compliance with other regulations for wastewater.* After the compliance dates specified in § 63.2445, if you have a Group 1 wastewater stream that is also subject to provisions in 40 CFR parts 260 through 272, you may elect to determine whether this subpart or 40 CFR parts 260 through 272 contain the more stringent control requirements (*e.g.*, design, operation, and inspection requirements for waste management units; numerical treatment standards; etc.) and the more stringent testing, monitoring, recordkeeping, and reporting requirements. Compliance with provisions of 40 CFR parts 260 through 272 that are determined to be more stringent than the requirements of this subpart constitute compliance with this subpart. For example, provisions of 40 CFR parts 260 through 272 for treatment units that meet the conditions specified in § 63.138(h) constitute compliance with this subpart. You must identify in the notification of compliance status report required by § 63.2520(d) the information and procedures that you used to make any stringency determinations.

(h) *Compliance with 40 CFR part 60, subpart DDD, III, NNN, or RRR.* After the compliance dates specified in § 63.2445, if you have an MCPU that contains equipment subject to the provisions of this subpart that are also subject to the provisions of 40 CFR part 60, subpart DDD, III, NNN, or RRR, you may elect to apply this subpart to all such equipment in the MCPU. If an MCPU subject to the provisions of this subpart has equipment to which this subpart does not apply but which is subject to a standard in 40 CFR part 60, subpart DDD, III, NNN, or RRR, you may elect to comply with the requirements for Group 1 process vents in this subpart for such equipment. If you elect any of these methods of compliance, you must consider all total organic compounds, minus methane and ethane, in such equipment for purposes of compliance with this subpart, as if

sfrattini on LAPJZKW1R2 with $$_JOB
VerDate Sep<11>2014 09:16 Apr 04, 2023 Jkt 256165 PO 00000 Frm 00496 Fmt 8010 Sfmt 8010 Q:\40\256165.XXX PC31

they were organic HAP. Compliance with the provisions of this subpart, in the manner described in this paragraph (h), will constitute compliance with 40 CFR part 60, subpart DDD, III, NNN, or RRR, as applicable.

(i) *Compliance with 40 CFR part 61, subpart BB.* (1) After the compliance dates specified in §63.2445, a Group 1 transfer rack, as defined in §63.2550, that is also subject to the provisions of 40 CFR part 61, subpart BB, you are required to comply only with the provisions of this subpart.

(2) After the compliance dates specified in §63.2445, a Group 2 transfer rack, as defined in §63.2550, that is also subject to the provisions of 40 CFR part 61, subpart BB, is required to comply with the provisions of either paragraph (l)(2)(i) or (ii) of this section.

(i) If the transfer rack is subject to the control requirements specified in §61.302 of 40 CFR part 61, subpart BB, then you may elect to comply with either the requirements of 40 CFR part 61, subpart BB, or the requirements for Group 1 transfer racks under this subpart FFFF.

(ii) If the transfer rack is subject only to reporting and recordkeeping requirements under 40 CFR part 61, subpart BB, then you are required to comply only with the reporting and recordkeeping requirements specified in this subpart for Group 2 transfer racks, and you are exempt from the reporting and recordkeeping requirements in 40 CFR part 61, subpart BB.

(j) *Compliance with 40 CFR part 61, subpart FF.* After the compliance date specified in §63.2445, for a Group 1 or Group 2 wastewater stream that is also subject to the provisions of 40 CFR 61.342(c) through (h), and is not exempt under 40 CFR 61.342(c)(2) or (3), you may elect to comply only with the requirements for Group 1 wastewater streams in this subpart FFFF. If a Group 2 wastewater stream is exempted from 40 CFR 61.342(c)(1) under 40 CFR 61.342(c)(2) or (3), then you are required to comply only with the reporting and recordkeeping requirements specified in this subpart for Group 2 wastewater streams, and you are exempt from the requirements in 40 CFR part 61, subpart FF.

(k) *Compliance with 40 CFR part 60, subpart VV or VVa, and 40 CFR part 61, subpart V.* Except as specified in paragraphs (k)(1) and (2) of this section, after the compliance date specified in §63.2445, if you have an affected source with equipment that is also subject to the requirements of 40 CFR part 60, subpart VV or VVa, or 40 CFR part 61, subpart V, you may elect to apply this subpart to all such equipment. After the compliance date specified in §63.2445, if you have an affected source with equipment to which this subpart does not apply, but which is subject to the requirements of 40 CFR part 60, subpart VV or VVa, or 40 CFR part 61, subpart V, you may elect to apply this subpart to all such equipment. If you elect either of the methods of compliance in this paragraph (k), you must consider all total organic compounds, minus methane and ethane, in such equipment for purposes of compliance with this subpart, as if they were organic HAP. Compliance with the provisions of this subpart, in the manner described in this paragraph (k), will constitute compliance with 40 CFR part 60, subpart VV or VVa, and 40 CFR part 61, subpart V, as applicable.

(1) The provision in §63.2480(b)(4) does not apply to connectors in gas/vapor and light liquid service that are subject to monitoring under 40 CFR 60.482–11a if complying with the compliance option in this paragraph (k).

(2) Beginning no later than the compliance dates specified in §63.2445(g), equipment that must be controlled according to this subpart and subpart VVa of 40 CFR part 60 is required only to comply with the equipment leak requirements of this subpart, except you must also comply with the calibration drift assessment requirements specified at 40 CFR 60.485a(b)(2) if they are required to do so in subpart VVa of 40 CFR part 60. When complying with the calibration drift assessment requirements at 40 CFR 60.485a(b)(2), the requirement at 40 CFR 60.486a(e)(8)(v) to record the instrument reading for each scale used applies.

(l) *Applicability of process units included in a process unit group.* You may elect to develop and comply with the requirements for PUG in accordance

sfrattini on LAPJZKW1R2 with $$_JOB
VerDate Sep<11>2014 09:16 Apr 04, 2023 Jkt 256165 PO 00000 Frm 00497 Fmt 8010 Sfmt 8010 Q:\40\256165.XXX PC31

with paragraphs (l)(1) through (3) of this section.

(1) *Procedures to create process unit groups.* Develop and document changes in a PUG in accordance with the procedures specified in paragraphs (l)(1)(i) through (v) of this section.

(i) Initially, identify an MCPU that is created from nondedicated equipment that will operate on or after November 10, 2003 and identify all processing equipment that is part of this MCPU, based on descriptions in operating scenarios.

(ii) Add to the group any other nondedicated MCPU and other nondedicated process units expected to be operated in the 5 years after the date specified in paragraph (l)(1)(i) of this section, provided they satisfy the criteria specified in paragraphs (l)(1)(ii)(A) through (C) of this section. Also identify all of the processing equipment used for each process unit based on information from operating scenarios and other applicable documentation.

(A) Each process unit that is added to a group must have some processing equipment that is also part of one or more process units in the group.

(B) No process unit may be part of more than one PUG.

(C) The processing equipment used to satisfy the requirement of paragraph (l)(1)(ii)(A) of this section may not be a storage tank or control device.

(iii) The initial PUG consists of all of the processing equipment for the process units identified in paragraphs (l)(1)(i) and (ii) of this section. As an alternative to the procedures specified in paragraphs (l)(1)(i) and (ii) of this section, you may use a PUG that was developed in accordance with § 63.1360(h) as your initial PUG.

(iv) Add process units developed in the future in accordance with the conditions specified in paragraphs (l)(1)(ii)(A) and (B) of this section.

(v) Maintain records that describe the process units in the initial PUG, the procedure used to create the PUG, and subsequent changes to each PUG as specified in § 63.2525(i). Submit the records in reports as specified in § 63.2520(d)(2)(ix) and (e)(8).

(2) *Determine primary product.* You must determine the primary product of each PUG created in paragraph (l)(1) of this section according to the procedures specified in paragraphs (l)(2)(i) through (iv) of this section.

(i) The primary product is the type of product (*e.g.*, organic chemicals subject to § 63.2435(b)(1), pharmaceutical products subject to § 63.1250, or pesticide active ingredients subject to § 63.1360) expected to be produced for the greatest operating time in the 5-year period specified in paragraph (l)(1)(ii) of this section.

(ii) If the PUG produces multiple types of products equally based on operating time, then the primary product is the type of product with the greatest production on a mass basis over the 5-year period specified in paragraph (l)(1)(ii) of this section.

(iii) At a minimum, you must redetermine the primary product of the PUG following the procedure specified in paragraphs (l)(2)(i) and (ii) of this section every 5 years.

(iv) You must record the calculation of the initial primary product determination as specified in § 63.2525(i)(3) and report the results in the notification of compliance status report as specified in § 63.2520(d)(8)(ix). You must record the calculation of each redetermination of the primary product as specified in § 63.2525(i)(5) and report the calculation in a compliance report submitted no later than the report covering the period for the end of the 5th year after cessation of production of the previous primary product, as specified in § 63.2520(e)(8).

(3) *Compliance requirements.* (i) If the primary product of the PUG is determined according to paragraph (l)(2) of this section to be material described in § 63.2435(b)(1), then you must comply with this subpart for each MCPU in the PUG. You may also elect to comply with this subpart for all other process units in the PUG, which constitutes compliance with other part 63 rules.

(ii) If the primary product of the PUG is determined according to paragraph (l)(2) of this section to be material not described in § 63.2435(b)(1), then you must comply with paragraph (l)(3)(ii)(A), (B), or (C) of this section, as applicable.

(A) If the primary product is subject to subpart GGG of this part 63, then

sfrattini on LAPJZKW1R2 with $$_JOB
VerDate Sep<11>2014 09:16 Apr 04, 2023 Jkt 256165 PO 00000 Frm 00498 Fmt 8010 Sfmt 8010 Q:\40\256165.XXX PC31

comply with the requirements of subpart GGG for each MCPU in the PUG.

(B) If the primary product is subject to subpart MMM of this part 63, then comply with the requirements of subpart MMM for each MCPU in the PUG.

(C) If the primary product is subject to any subpart in this part 63 other than subpart GGG or subpart MMM, then comply with the requirements of this subpart for each MCPU in the PUG.

(iii) The requirements for new and reconstructed sources in the alternative subpart apply to all MCPU in the PUG if and only if the affected source under the alternative subpart meets the requirements for construction or reconstruction.

(m) *Overlap of this subpart with other regulations for flares.* (1) Beginning no later than the compliance dates specified in § 63.2445(g), flares that control ethylene oxide emissions from affected sources in ethylene oxide service as defined in § 63.2550 or are used to control emissions from MCPUs that produce olefins and polyolefins, subject to the provisions of 40 CFR 60.18 or 63.11, and used as a control device for an emission point subject to the emission limits and work practice standards in Tables 1, 2, 4 or 5 to this subpart are required to comply only with the provisions specified in § 63.2450(e)(5). At any time before the compliance dates specified in § 63.2445(g), flares that are subject to the provisions of 40 CFR 60.18 or 63.11 and elect to comply with the requirements in § 63.2450(e)(5) are required to comply only with the provisions specified in this subpart. For purposes of compliance with this paragraph (m), ''MCPUs that produces olefins or polyolefins'' includes only those MCPUs that manufacture ethylene, propylene, polyethylene, and/or polypropylene as a product. By-products and impurities as defined in § 63.101, as well as wastes and trace contaminants, are not considered products.

(2) Beginning no later than the compliance dates specified in § 63.2445(g), flares subject to § 63.987 and used as a control device for an emission point subject to the emission limits and work practice standards in Tables 1, 2, 4 or 5 to this subpart are only required to comply with § 63.2450(e)(5).

(3) Beginning no later than the compliance dates specified in § 63.2445(g), flares subject to the requirements in subpart CC of this part and used as a control device for an emission point subject to the emission limits and work practice standards in Tables 1, 2, 4 or 5 to this subpart are only required to comply with the flare requirements in subpart CC of this part. This paragraph (m)(3) does not apply to multipoint pressure assisted flares.

[68 FR 63888, Nov. 10, 2003, as amended at 71 FR 40337, July 14, 2006; 85 FR 49158, Aug. 12, 2020]

§ 63.2540 What parts of the General Provisions apply to me?

Table 12 to this subpart shows which parts of the General Provisions in §§ 63.1 through 63.15 apply to you.

§ 63.2545 Who implements and enforces this subpart?

(a) This subpart can be implemented and enforced by us, the U.S. Environmental Protection Agency (U.S. EPA), or a delegated authority such as your State, local, or tribal agency. If the U.S. EPA Administrator has delegated authority to your State, local, or tribal agency, then that agency also has the authority to implement and enforce this subpart. You should contact your U.S. EPA Regional Office to find out if this subpart is delegated to your State, local, or tribal agency.

(b) In delegating implementation and enforcement authority of this subpart to a state, local, or tribal agency under subpart E of this part, the authorities contained in paragraphs (b)(1) through (5) of this section are retained by the Administrator of U.S. EPA and are not delegated to the state, local, or tribal agency.

(1) Approval of alternatives to the non-opacity emission limits and work practice standards in § 63.2450(a) under § 63.6(g).

(2) Approval of major alternatives to test methods under § 63.7(e)(2)(ii) and (f) and as defined in § 63.90.

(3) Approval of major alternatives to monitoring under § 63.8(f) and as defined in § 63.90.

(4) Approval of major alternatives to recordkeeping and reporting under § 63.10(f) and as defined in § 63.90.

sfrattini on LAPJZKW1R2 with $$_JOB
VerDate Sep<11>2014 09:16 Apr 04, 2023 Jkt 256165 PO 00000 Frm 00499 Fmt 8010 Sfmt 8010 Q:\40\256165.XXX PC31

(5) Approval of an alternative to any electronic reporting to the EPA required by this subpart.

[68 FR 63888, Nov. 10, 2003, as amended at 85 FR 49159, Aug. 12, 2020]

§ 63.2550 What definitions apply to this subpart?

(a) For an affected source complying with the requirements in subpart SS of this part 63, the terms used in this subpart and in subpart SS of this part 63 have the meaning given them in § 63.981, except as specified in §§ 63.2450(k)(2) and (m), 63.2470(c)(2), 63.2475(b), and paragraph (i) of this section.

(b) For an affected source complying with the requirements in 40 CFR part 65, subpart F, the terms used in this subpart and in 40 CFR part 65, subpart F have the meaning given to them in § 65.2.

(c) For an affected source complying with the requirements in subpart UU of this part 63, the terms used in this subpart and in subpart UU of this part 63 have the meaning given them in § 63.1020.

(d) For an affected source complying with the requirements in subpart WW of this part 63, the terms used in this subpart and subpart WW of this part 63 have the meaning given them in § 63.1061, except as specified in §§ 63.2450(m), 63.2470(c)(2), and paragraph (i) of this section.

(e) For an affected source complying with the requirements in §§ 63.132 through 63.149, the terms used in this subpart and §§ 63.132 through 63.149 have the meaning given them in §§ 63.101 and 63.111, except as specified in § 63.2450(m) and paragraph (i) of this section.

(f) For an affected source complying with the requirements in §§ 63.104 and 63.105, the terms used in this subpart and in §§ 63.104 and 63.105 of this subpart have the meaning given them in § 63.101, except as specified in §§ 63.2450(m), 63.2490(b), and paragraph (i) of this section.

(g) For an affected source complying with requirements in §§ 63.1253, 63.1257, and 63.1258, the terms used in this subpart and in §§ 63.1253, 63.1257, and 63.1258 have the meaning given them in § 63.1251, except as specified in § 63.2450(m) and paragraph (i) of this section.

(h) For an affected source complying with the requirements in 40 CFR part 65, subpart F, the terms used in this subpart and in 40 CFR part 65, subpart F, have the meaning given them in 40 CFR 65.2.

(i) All other terms used in this subpart are defined in the Clean Air Act (CAA), in 40 CFR 63.2, and in this paragraph (i). If a term is defined in § 63.2, § 63.101, § 63.111, § 63.981, § 63.1020, § 63.1061, § 63.1251, or § 65.2 and in this paragraph (i), the definition in this paragraph (i) applies for the purposes of this subpart.

Ancillary activities means boilers and incinerators (not used to comply with the emission limits in Tables 1 through 7 to this subpart), chillers and refrigeration systems, and other equipment and activities that are not directly involved (*i.e.*, they operate within a closed system and materials are not combined with process fluids) in the processing of raw materials or the manufacturing of a product or isolated intermediate.

Batch operation means a noncontinuous operation involving intermittent or discontinuous feed into equipment, and, in general, involves the emptying of the equipment after the operation ceases and prior to beginning a new operation. Addition of raw material and withdrawal of product do not occur simultaneously in a batch operation.

Batch process vent means a vent from a unit operation or vents from multiple unit operations within a process that are manifolded together into a common header, through which a HAP-containing gas stream is, or has the potential to be, released to the atmosphere. Examples of batch process vents include, but are not limited to, vents on condensers used for product recovery, reactors, filters, centrifuges, and process tanks. The following are not batch process vents for the purposes of this subpart:

(1) Continuous process vents;

(2) Bottoms receivers;

(3) Surge control vessels;

(4) Gaseous streams routed to a fuel gas system(s) unless on and after August 12, 2023, the fuel gas system(s) supplies a flare of which 50 percent or

sfrattini on LAPJZKW1R2 with $$_JOB
VerDate Sep<11>2014 09:16 Apr 04, 2023 Jkt 256165 PO 00000 Frm 00500 Fmt 8010 Sfmt 8010 Q:\40\256165.XXX PC31

more of the fuel gas burned in the flare is derived from an MCPU that has processes and/or equipment in ethylene oxide service, or produces olefins or polyolefins;

(5) Vents on storage tanks, wastewater emission sources, or pieces of equipment subject to the emission limits and work practice standards in Tables 4, 6, and 7 to this subpart;

(6) Drums, pails, and totes;

(7) Flexible elephant trunk systems that draw ambient air (*i.e.*, the system is not ducted, piped, or otherwise connected to the unit operations) away from operators when vessels are opened; and

(8) Except for batch process vents in ethylene oxide service, emission streams from emission episodes that are undiluted and uncontrolled containing less than 50 ppmv HAP are not part of any batch process vent. A vent from a unit operation, or a vent from multiple unit operations that are manifolded together, from which total uncontrolled HAP emissions are less than 200 lb/yr is not a batch process vent; emissions for all emission episodes associated with the unit operation(s) must be included in the determination of the total mass emitted. The HAP concentration or mass emission rate may be determined using any of the following: Process knowledge that no HAP are present in the emission stream; an engineering assessment as discussed in § 63.1257(d)(2)(ii), except that you do not need to demonstrate that the equations in § 63.1257(d)(2)(i) do not apply, and the precompliance reporting requirements specified in § 63.1257(d)(2)(ii)(E) do not apply for the purposes of this demonstration; equations specified in § 63.1257(d)(2)(i), as applicable; test data using Method 18 of 40 CFR part 60, appendix A; or any other test method that has been validated according to the procedures in EPA Method 301 of appendix A to this part.

Bench-scale process means a process (other than a research and development facility) that is operated on a small scale, such as one capable of being located on a laboratory bench top. This bench-scale equipment will typically include reagent feed vessels, a small reactor and associated product separator, recovery and holding equipment. These processes are only capable of producing small quantities of product.

Biofilter means an enclosed control system such as a tank or series of tanks with a fixed roof that contact emissions with a solid media (such as bark) and use microbiological activity to transform organic pollutants in a process vent stream to innocuous compounds such as carbon dioxide, water, and inorganic salts. Wastewater treatment processes such as aeration lagoons or activated sludge systems are not considered to be biofilters.

Bottoms receiver means a tank that collects bottoms from continuous distillation before the stream is sent for storage or for further downstream processing.

Breakthrough means the time when the level of HAP or TOC, measured at the outlet of the first bed, has been detected is at the highest concentration allowed to be discharged from the adsorber system and indicates that the adsorber bed should be replaced.

Construction means the onsite fabrication, erection, or installation of an affected source or MCPU. Addition of new equipment to an MCPU subject to existing source standards does not constitute construction, but it may constitute reconstruction of the affected source or MCPU if it satisfies the definition of reconstruction in § 63.2.

Consumption means the quantity of all HAP raw materials entering a process in excess of the theoretical amount used as reactant, assuming 100 percent stoichiometric conversion. The raw materials include reactants, solvents, and any other additives. If a HAP is generated in the process as well as added as a raw material, consumption includes the quantity generated in the process.

Continuous operation means any operation that is not a batch operation.

Continuous process vent means the point of discharge to the atmosphere (or the point of entry into a control device, if any) of a gas stream if the gas stream has the characteristics specified in § 63.107(b) through (h), or meets the criteria specified in § 63.107(i), except:

sfrattini on LAPJZKW1R2 with $$_JOB
VerDate Sep<11>2014 09:16 Apr 04, 2023 Jkt 256165 PO 00000 Frm 00501 Fmt 8010 Sfmt 8010 Q:\40\256165.XXX PC31

(1) The reference in § 63.107(e) to a chemical manufacturing process unit that meets the criteria of § 63.100(b) means an MCPU that meets the criteria of § 63.2435(b);

(2) The reference in § 63.107(h)(4) to § 63.113 means Table 1 to this subpart;

(3) The references in § 63.107(h)(7) to §§ 63.119 and 63.126 mean tables 4 and 5 to this subpart; and

(4) For the purposes of § 63.2455, all references to the characteristics of a process vent (*e.g.*, flowrate, total HAP concentration, or TRE index value) mean the characteristics of the gas stream.

(5) The reference to ''total organic HAP'' in § 63.107(d) means ''total HAP'' for the purposes of this subpart FFFF.

(6) The references to an ''air oxidation reactor, distillation unit, or reactor'' in § 63.107 mean any continuous operation for the purposes of this subpart.

(7) A separate determination is required for the emissions from each MCPU, even if emission streams from two or more MCPU are combined prior to discharge to the atmosphere or to a control device.

(8) On and after August 12, 2023, § 63.107(h)(3) applies unless the fuel gas system supplies a flare of which 50 percent or more of the fuel gas burned in the flare is derived from an MCPU that has processes and/or equipment in ethylene oxide service, or produces olefins or polyolefins.

(9) On and after August 12, 2023, § 63.107(h)(9) no longer applies.

(10) On and after August 12, 2023, § 63.107(i) no longer applies. Instead, a process vent is the point of discharge to the atmosphere (or the point of entry into a control device, if any) of a gas stream if the gas stream meets the criteria specified in this paragraph. The gas stream would meet the characteristics specified in § 63.107(b) through (g) of subpart F, but, for purposes of avoiding applicability, has been deliberately interrupted, temporarily liquefied, routed through any item of equipment for no process purpose, or disposed of in a flare that does not meet the criteria in § 63.11(b) of subpart A or § 63.2450(e)(5) as applicable, or an incinerator that does not reduce emissions of organic HAP by 98 percent or to a concentration of 20 parts per million by volume, whichever is less stringent.

(11) Section 63.107(d) does not apply to continuous process vents in ethylene oxide service.

Dedicated MCPU means an MCPU that consists of equipment that is used exclusively for one process, except that storage tanks assigned to the process according to the procedures in § 63.2435(d) also may be shared by other processes.

Deviation means any instance in which an affected source subject to this subpart, or an owner or operator of such a source:

(1) Fails to meet any requirement or obligation established by this subpart including, but not limited to, any emission limit, operating limit, or work practice standard; or

(2) Fails to meet any term or condition that is adopted to implement an applicable requirement in this subpart and that is included in the operating permit for any affected source required to obtain such a permit; or

(3) Before August 12, 2023, fails to meet any emission limit, operating limit, or work practice standard in this subpart during startup, shutdown, or malfunction, regardless of whether or not such failure is permitted by this subpart. On and after August 12, 2023, this paragraph (3) no longer applies.

Emission point means each continuous process vent, batch process vent, storage tank, transfer rack, and wastewater stream.

Energetics means propellants, explosives, and pyrotechnics and include materials listed at 49 CFR 172.101 as Hazard Class I Hazardous Materials, Divisions 1.1 through 1.6.

Equipment means each pump, compressor, agitator, pressure relief device, sampling connection system, open-ended valve or line, valve, connector, and instrumentation system in organic HAP service; and any control devices or systems used to comply with Table 6 to this subpart.

Excess emissions means emissions greater than those allowed by the emission limit.

Family of materials means a grouping of materials with the same basic composition or the same basic end use or functionality produced using the same

sfrattini on LAPJZKW1R2 with $$_JOB
VerDate Sep<11>2014 09:16 Apr 04, 2023 Jkt 256165 PO 00000 Frm 00502 Fmt 8010 Sfmt 8010 Q:\40\256165.XXX PC31

basic feedstocks with essentially identical HAP emission profiles (primary constituent and relative magnitude on a pound per product basis) and manufacturing equipment configuration. Examples of families of materials include multiple grades of the same product or different variations of a product (*e.g.*, blue, black, and red resins).

Force majeure event means a release of HAP, either directly to the atmosphere from a pressure relief device or discharged via a flare, that is demonstrated to the satisfaction of the Administrator to result from an event beyond the owner or operator's control, such as natural disasters; acts of war or terrorism; loss of a utility external to the MCPU (*e.g.*, external power curtailment), excluding power curtailment due to an interruptible service agreement; and fire or explosion originating at a near or adjoining facility outside of the miscellaneous organic chemical manufacturing process unit that impacts the miscellaneous organic chemical manufacturing process unit's ability to operate.

Group 1 batch process vent means each of the batch process vents in a process for which the collective uncontrolled organic HAP emissions from all of the batch process vents are greater than or equal to 10,000 lb/yr at an existing source or greater than or equal to 3,000 lb/yr at a new source.

Group 2 batch process vent means each batch process vent that does not meet the definition of Group 1 batch process vent.

Group 1 continuous process vent means a continuous process vent for which the flow rate is greater than or equal to 0.005 standard cubic meter per minute, and the total resource effectiveness index value, calculated according to §63.2455(b), is less than or equal to 1.9 at an existing source and less than or equal to 5.0 at a new source.

Group 2 continuous process vent means a continuous process vent that does not meet the definition of a Group 1 continuous process vent.

Group 1 storage tank means a storage tank with a capacity greater than or equal to 10,000 gal storing material that has a maximum true vapor pressure of total HAP greater than or equal to 6.9 kilopascals at an existing source or greater than or equal to 0.69 kilopascals at a new source.

Group 2 storage tank means a storage tank that does not meet the definition of a Group 1 storage tank.

Group 1 transfer rack means a transfer rack that loads more than 0.65 million liters/year of liquids that contain organic HAP with a rack-weighted average partial pressure, as defined in §63.111, greater than or equal to 1.5 pound per square inch absolute.

Group 2 transfer rack means a transfer rack that does not meet the definition of a Group 1 transfer rack.

Group 1 wastewater stream means a wastewater stream consisting of process wastewater at an existing or new source that meets the criteria for Group 1 status in §63.2485(c) for compounds in Tables 8 and 9 to this subpart and/or a wastewater stream consisting of process wastewater at a new source that meets the criteria for Group 1 status in §63.132(d) for compounds in Table 8 to subpart G of this part 63.

Group 2 wastewater stream means any process wastewater stream that does not meet the definition of a Group 1 wastewater stream.

Halogen atoms mean chlorine and fluorine.

Halogenated vent stream means a vent stream determined to have a mass emission rate of halogen atoms contained in organic compounds of 0.45 kilograms per hour or greater determined by the procedures presented in §63.115(d)(2)(v).

HAP metals means the metal portion of antimony compounds, arsenic compounds, beryllium compounds, cadmium compounds, chromium compounds, cobalt compounds, lead compounds, manganese compounds, mercury compounds, nickel compounds, and selenium compounds.

Heat exchange system means a device or collection of devices used to transfer heat from process fluids to water without intentional direct contact of the process fluid with the water (*i.e.*, noncontact heat exchanger) and to transport and/or cool the water in a closed-loop recirculation system (cooling tower system) or a once-through system (*e.g.*, river or pond water). For closed-loop recirculation systems, the

sfrattini on LAPJZKW1R2 with $$_JOB
VerDate Sep<11>2014 09:16 Apr 04, 2023 Jkt 256165 PO 00000 Frm 00503 Fmt 8010 Sfmt 8010 Q:\40\256165.XXX PC31

heat exchange system consists of a cooling tower, all miscellaneous organic chemical manufacturing process unit heat exchangers that are in organic HAP service, as defined in this subpart, serviced by that cooling tower, and all water lines to and from these miscellaneous organic chemical manufacturing process unit heat exchangers. For once-through systems, the heat exchange system consists of all heat exchangers that are in organic HAP service, as defined in this subpart, servicing an individual miscellaneous organic chemical manufacturing process unit and all water lines to and from these heat exchangers. Sample coolers or pump seal coolers are not considered heat exchangers for the purpose of this definition and are not part of the heat exchange system. Intentional direct contact with process fluids results in the formation of a wastewater.

Hydrogen halide and halogen HAP means hydrogen chloride, hydrogen fluoride, and chlorine.

In ethylene oxide service means the following:

(1) For equipment leaks, any equipment that contains or contacts a fluid (liquid or gas) that is at least 0.1 percent by weight of ethylene oxide. If information exists that suggests ethylene oxide could be present in equipment, the equipment is considered to be ''in ethylene oxide service'' unless sampling and analysis is performed as specified in § 63.2492 to demonstrate that the equipment does not meet the definition of being ''in ethylene oxide service''. Examples of information that could suggest ethylene oxide could be present in equipment, include calculations based on safety data sheets, material balances, process stoichiometry, or previous test results provided the results are still relevant to the current operating conditions.

(2) For process vents, each batch and continuous process vent in a process that, when uncontrolled, contains a concentration of greater than or equal to 1 ppmv undiluted ethylene oxide, and when combined, the sum of all these process vents would emit uncontrolled ethylene oxide emissions greater than or equal to 5 lb/yr (2.27 kg/yr). If information exists that suggests ethylene oxide could be present in a batch or continuous process vent, then the batch or continuous process vent is considered to be ''in ethylene oxide service'' unless an analysis is performed as specified in § 63.2492 to demonstrate that the batch or continuous process vent does not meet the definition of being ''in ethylene oxide service''. Examples of information that could suggest ethylene oxide could be present in a batch or continuous process vent, include calculations based on safety data sheets, material balances, process stoichiometry, or previous test results provided the results are still relevant to the current operating conditions.

(3) For storage tanks, storage tanks of any capacity and vapor pressure storing a liquid that is at least 0.1 percent by weight of ethylene oxide. If knowledge exists that suggests ethylene oxide could be present in a storage tank, then the storage tank is considered to be ''in ethylene oxide service'' unless sampling and analysis is performed as specified in § 63.2492 to demonstrate that the storage tank does not meet the definition of being ''in ethylene oxide service''. The exemptions for ''vessels storing organic liquids that contain HAP only as impurities'' and ''pressure vessels designed to operate in excess of 204.9 kilopascals and without emissions to the atmosphere'' listed in the definition of ''storage tank'' in this section do not apply for storage tanks that may be in ethylene oxide service. Examples of information that could suggest ethylene oxide could be present in a storage tank, include calculations based on safety data sheets, material balances, process stoichiometry, or previous test results provided the results are still relevant to the current operating conditions.

In organic HAP service means that a piece of equipment either contains or contacts a fluid (liquid or gas) that is at least 5 percent by weight of total organic HAP as determined according to the provisions of § 63.180(d). The provisions of § 63.180(d) also specify how to determine that a piece of equipment is not in organic HAP service.

sfrattini on LAPJZKW1R2 with $$_JOB
VerDate Sep<11>2014 09:16 Apr 04, 2023 Jkt 256165 PO 00000 Frm 00504 Fmt 8010 Sfmt 8010 Q:\40\256165.XXX PC31

Isolated intermediate means a product of a process that is stored before subsequent processing. An isolated intermediate is usually a product of a chemical synthesis, fermentation, or biological extraction process. Storage of an isolated intermediate marks the end of a process. Storage occurs at any time the intermediate is placed in equipment used solely for storage. The storage equipment is part of the MCPU that produces the isolated intermediate and is not assigned as specified in § 63.2435(d).

Large control device means a control device that controls total HAP emissions of greater than or equal to 10 tpy, before control.

Loading rack means a single system used to fill tank trucks and railcars at a single geographic site. Loading equipment and operations that are physically separate (*i.e.*, do not share common piping, valves, and other equipment) are considered to be separate loading racks.

Maintenance wastewater means wastewater generated by the draining of process fluid from components in the MCPU into an individual drain system in preparation for or during maintenance activities. Maintenance wastewater can be generated during planned and unplanned shutdowns and during periods not associated with a shutdown. Examples of activities that can generate maintenance wastewater include descaling of heat exchanger tubing bundles, cleaning of distillation column traps, draining of pumps into an individual drain system, and draining of portions of the MCPU for repair. Wastewater from routine cleaning operations occurring as part of batch operations is not considered maintenance wastewater.

Maximum true vapor pressure has the meaning given in § 63.111, except that it applies to all HAP rather than only organic HAP.

Miscellaneous organic chemical manufacturing process means all equipment which collectively function to produce a product or isolated intermediate that are materials described in § 63.2435(b). For the purposes of this subpart, process includes any, all or a combination of reaction, recovery, separation, purification, or other activity, operation, manufacture, or treatment which are used to produce a product or isolated intermediate. A process is also defined by the following:

(1) Routine cleaning operations conducted as part of batch operations are considered part of the process;

(2) Each nondedicated solvent recovery operation is considered a single process;

(3) Each nondedicated formulation operation is considered a single process that is used to formulate numerous materials and/or products;

(4) Quality assurance/quality control laboratories are not considered part of any process; and

(5) Ancillary activities are not considered a process or part of any process.

(6) The end of a process that produces a solid material is either up to and including the dryer or extruder, or for a polymer production process without a dryer or extruder, it is up to and including the die plate or solid-state reactor, except in two cases. If the dryer, extruder, die plate, or solid-state reactor is followed by an operation that is designed and operated to remove HAP solvent or residual HAP monomer from the solid, then the solvent removal operation is the last step in the process. If the dried solid is diluted or mixed with a HAP-based solvent, then the solvent removal operation is the last step in the process.

Nondedicated solvent recovery operation means a distillation unit or other purification equipment that receives used solvent from more than one MCPU.

Nonstandard batch means a batch process that is operated outside of the range of operating conditions that are documented in an existing operating scenario but is still a reasonably anticipated event. For example, a nonstandard batch occurs when additional processing or processing at different operating conditions must be conducted to produce a product that is normally produced under the conditions described by the standard batch. A nonstandard batch may be necessary as a result of a malfunction, but it is not itself a malfunction.

On-site or on site means, with respect to records required to be maintained by this subpart or required by another

sfrattini on LAPJZKW1R2 with $$_JOB
VerDate Sep<11>2014 09:16 Apr 04, 2023 Jkt 256165 PO 00000 Frm 00505 Fmt 8010 Sfmt 8010 Q:\40\256165.XXX PC31

subpart referenced by this subpart, that records are stored at a location within a major source which encompasses the affected source. On-site includes, but is not limited to, storage at the affected source or MCPU to which the records pertain, or storage in central files elsewhere at the major source.

Operating scenario means, for the purposes of reporting and recordkeeping, any specific operation of an MCPU as described by records specified in § 63.2525(b).

Organic group means structures that contain primarily carbon, hydrogen, and oxygen atoms.

Organic peroxides means organic compounds containing the bivalent -o-o- structure which may be considered to be a structural derivative of hydrogen peroxide where one or both of the hydrogen atoms has been replaced by an organic radical.

Point of determination means each point where process wastewater exits the MCPU or control device.

NOTE TO DEFINITION FOR POINT OF DETERMINATION: The regulation allows determination of the characteristics of a wastewater stream: At the point of determination; or downstream of the point of determination if corrections are made for changes in flow rate and annual average concentration of soluble HAP and partially soluble HAP compounds as determined according to procedures in § 63.144 of subpart G in this part 63. Such changes include losses by air emissions; reduction of annual average concentration or changes in flow rate by mixing with other water or wastewater streams; and reduction in flow rate or annual average concentration by treating or otherwise handling the wastewater stream to remove or destroy HAP.

Predominant HAP means as used in calibrating an analyzer, the single organic HAP that constitutes the largest percentage of the total organic HAP in the analyzed gas stream, by volume.

Pressure release means the emission of materials resulting from the system pressure being greater than the set pressure of the pressure relief device. This release can be one release or a series of releases over a short time period.

Pressure relief device means a valve, rupture disk, or similar device used only to release an unplanned, nonroutine discharge of gas from process equipment in order to avoid safety hazards or equipment damage. A pressure relief device discharge can result from an operator error, a malfunction such as a power failure or equipment failure, or other unexpected cause. Such devices include conventional, spring-actuated relief valves, balanced bellows relief valves, pilot-operated relief valves, rupture disks, and breaking, buckling, or shearing pin devices. Devices that are actuated either by a pressure of less than or equal to 2.5 pounds per square inch gauge or by a vacuum are not pressure relief devices.

Pressure vessel means a storage vessel that is used to store liquids or gases and is designed not to vent to the atmosphere as a result of compression of the vapor headspace in the pressure vessel during filling of the pressure vessel to its design capacity.

Process condenser means a condenser whose primary purpose is to recover material as an integral part of an MCPU. All condensers recovering condensate from an MCPU at or above the boiling point or all condensers in line prior to a vacuum source are considered process condensers. Typically, a primary condenser or condensers in series are considered to be integral to the MCPU if they are capable of and normally used for the purpose of recovering chemicals for fuel value (i.e., net positive heating value), use, reuse or for sale for fuel value, use, or reuse. This definition does not apply to a condenser that is used to remove materials that would hinder performance of a downstream recovery device as follows:

(1) To remove water vapor that would cause icing in a downstream condenser, or

(2) To remove water vapor that would negatively affect the adsorption capacity of carbon in a downstream carbon adsorber, or

(3) To remove high molecular weight organic compounds or other organic compounds that would be difficult to remove during regeneration of a downstream carbon adsorber.

Process tank means a tank or vessel that is used within a process to collect material discharged from a feedstock storage tank or equipment within the process before the material is transferred to other equipment within the

sfrattini on LAPJZKW1R2 with $$_JOB
VerDate Sep<11>2014 09:16 Apr 04, 2023 Jkt 256165 PO 00000 Frm 00506 Fmt 8010 Sfmt 8010 Q:\40\256165.XXX PC31

process or a product storage tank. A process tank has emissions that are related to the characteristics of the batch cycle, and it does not accumulate product over multiple batches. Surge control vessels and bottoms receivers are not process tanks.

Production-indexed HAP consumption factor (HAP factor) means the result of dividing the annual consumption of total HAP by the annual production rate, per process.

Production-indexed VOC consumption factor (VOC factor) means the result of dividing the annual consumption of total VOC by the annual production rate, per process.

Quaternary ammonium compounds means a type of organic nitrogen compound in which the molecular structure includes a central nitrogen atom joined to four organic groups as well as an acid radical of some sort.

Recovery device means an individual unit of equipment used for the purpose of recovering chemicals from process vent streams and from wastewater streams for fuel value (i.e., net positive heating value), use, reuse, or for sale for fuel value, use, or reuse. For the purposes of meeting requirements in table 2 to this subpart, the recovery device must not be a process condenser and must recover chemicals to be reused in a process on site. Examples of equipment that may be recovery devices include absorbers, carbon adsorbers, condensers, oil-water separators or organic-water separators, or organic removal devices such as decanters, strippers, or thin-film evaporation units. To be a recovery device for a wastewater stream, a decanter and any other equipment based on the operating principle of gravity separation must receive only multi-phase liquid streams.

Relief valve means a type of pressure relief device that is designed to reclose after the pressure relief.

Responsible official means responsible official as defined in 40 CFR 70.2.

Safety device means a closure device such as a pressure relief valve, frangible disc, fusible plug, or any other type of device which functions exclusively to prevent physical damage or permanent deformation to a unit or its air emission control equipment by venting gases or vapors directly to the atmosphere during unsafe conditions resulting from an unplanned, accidental, or emergency event. For the purposes of this subpart, a safety device is not used for routine venting of gases or vapors from the vapor headspace underneath a cover such as during filling of the unit or to adjust the pressure in response to normal daily diurnal ambient temperature fluctuations. A safety device is designed to remain in a closed position during normal operations and open only when the internal pressure, or another relevant parameter, exceeds the device threshold setting applicable to the air emission control equipment as determined by the owner or operator based on manufacturer recommendations, applicable regulations, fire protection and prevention codes and practices, or other requirements for the safe handling of flammable, combustible, explosive, reactive, or hazardous materials.

Shutdown means the cessation of operation of a continuous operation for any purpose. Shutdown also means the cessation of a batch operation, or any related individual piece of equipment required or used to comply with this subpart, if the steps taken to cease operation differ from those described in a standard batch or nonstandard batch. Shutdown also applies to emptying and degassing storage vessels. Shutdown does not apply to cessation of batch operations at the end of a campaign or between batches within a campaign when the steps taken are routine operations.

Small control device means a control device that controls total HAP emissions of less than 10 tpy, before control.

Standard batch means a batch process operated within a range of operating conditions that are documented in an operating scenario. Emissions from a standard batch are based on the operating conditions that result in highest emissions. The standard batch defines the uncontrolled and controlled emissions for each emission episode defined under the operating scenario.

Startup means the setting in operation of a continuous operation for any

sfrattini on LAPJZKW1R2 with $$_JOB
VerDate Sep<11>2014 09:16 Apr 04, 2023 Jkt 256165 PO 00000 Frm 00507 Fmt 8010 Sfmt 8010 Q:\40\256165.XXX PC31

purpose; the first time a new or reconstructed batch operation begins production; for new equipment added, including equipment required or used to comply with this subpart, the first time the equipment is put into operation; or for the introduction of a new product/process, the first time the product or process is run in equipment. For batch operations, startup applies to the first time the equipment is put into operation at the start of a campaign to produce a product that has been produced in the past if the steps taken to begin production differ from those specified in a standard batch or nonstandard batch. Startup does not apply when the equipment is put into operation as part of a batch within a campaign when the steps taken are routine operations.

Storage tank means a tank or other vessel that is used to store liquids that contain organic HAP and/or hydrogen halide and halogen HAP and that has been assigned to an MCPU according to the procedures in § 63.2435(d). The following are not considered storage tanks for the purposes of this subpart:

(1) Vessels permanently attached to motor vehicles such as trucks, railcars, barges, or ships;

(2) Pressure vessels designed to operate in excess of 204.9 kilopascals and without emissions to the atmosphere;

(3) Vessels storing organic liquids that contain HAP only as impurities;

(4) Wastewater storage tanks;

(5) Bottoms receivers;

(6) Surge control vessels; and

(7) Process tanks.

Supplemental gases means the air that is added to a vent stream after the vent stream leaves the unit operation. Air that is part of the vent stream as a result of the nature of the unit operation is not considered supplemental gases. Air required to operate combustion device burner(s) is not considered supplemental gases.

Surge control vessel means feed drums, recycle drums, and intermediate vessels as part of any continuous operation. Surge control vessels are used within an MCPU when in-process storage, mixing, or management of flowrates or volumes is needed to introduce material into continuous operations.

Thermal expansion relief valve means a pressure relief valve designed to protect equipment from excess pressure due to thermal expansion of blocked liquid-filled equipment or piping due to ambient heating or heat from a heat tracing system. Pressure relief valves designed to protect equipment from excess pressure due to blockage against a pump or compressor or due to fire contingency are not thermal expansion relief valves.

Total organic compounds or (TOC) means the total gaseous organic compounds (minus methane and ethane) in a vent stream.

Transfer rack means the collection of loading arms and loading hoses, at a single loading rack, that are assigned to an MCPU according to the procedures specified in § 63.2435(d) and are used to fill tank trucks and/or rail cars with organic liquids that contain one or more of the organic HAP listed in section 112(b) of the CAA of this subpart. Transfer rack includes the associated pumps, meters, shutoff valves, relief valves, and other piping and valves.

Unit operation means those processing steps that occur within distinct equipment that are used, among other things, to prepare reactants, facilitate reactions, separate and purify products, and recycle materials. Equipment used for these purposes includes, but is not limited to, reactors, distillation columns, extraction columns, absorbers, decanters, dryers, condensers, and filtration equipment.

Waste management unit means the equipment, structure(s), and/or device(s) used to convey, store, treat, or dispose of wastewater streams or residuals. Examples of waste management units include wastewater tanks, air flotation units, surface impoundments, containers, oil-water or organic-water separators, individual drain systems, biological wastewater treatment units, waste incinerators, and organic removal devices such as steam and air stripper units, and thin film evaporation units. If such equipment is being operated as a recovery device, then it is part of a miscellaneous organic chemical manufacturing process and is not a waste management unit.

sfrattini on LAPJZKW1R2 with $$_JOB
VerDate Sep<11>2014 09:16 Apr 04, 2023 Jkt 256165 PO 00000 Frm 00508 Fmt 8010 Sfmt 8010 Q:\40\256165.XXX PC31

Wastewater means water that is discarded from an MCPU or control device through a POD and that contains either: an annual average concentration of compounds in tables 8 and 9 to this subpart of at least 5 ppmw and has an annual average flowrate of 0.02 liters per minute or greater; or an annual average concentration of compounds in tables 8 and 9 to this subpart of at least 10,000 ppmw at any flowrate. Wastewater means process wastewater or maintenance wastewater. The following are not considered wastewater for the purposes of this subpart:

(1) Stormwater from segregated sewers;

(2) Water from fire-fighting and deluge systems, including testing of such systems;

(3) Spills;

(4) Water from safety showers;

(5) Samples of a size not greater than reasonably necessary for the method of analysis that is used;

(6) Equipment leaks;

(7) Wastewater drips from procedures such as disconnecting hoses after cleaning lines; and

(8) Noncontact cooling water.

Wastewater stream means a stream that contains only wastewater as defined in this paragraph (i).

Work practice standard means any design, equipment, work practice, or operational standard, or combination thereof, that is promulgated pursuant to section 112(h) of the CAA.

[68 FR 63888, Nov. 10, 2003, as amended at 70 FR 38560, July 1, 2005; 71 FR 40338, July 14, 2006; 85 FR 49159, Aug. 12, 2020]

TABLE 1 TO SUBPART FFFF OF PART 63—EMISSION LIMITS AND WORK PRACTICE STANDARDS FOR CONTINUOUS PROCESS VENTS

As required in § 63.2455, you must meet each emission limit and work practice standard in the following table that applies to your continuous process vents:

For each . . .	For which . . .	Then you must . . .
1. Group 1 continuous process vent.	a. Not applicable	i. Reduce emissions of total organic HAP by ≥98 percent by weight or to an outlet process concentration ≤20 ppmv as organic HAP or TOC by venting emissions through a closed-vent system to any combination of control devices (except a flare); or ii. Reduce emissions of total organic HAP by venting emissions through a closed vent system to a flare; or iii. Use a recovery device to maintain the TRE above 1.9 for an existing source or above 5.0 for a new source.
2. Halogenated Group 1 continuous process vent stream.	a. You use a combustion control device to control organic HAP emissions.	i. Use a halogen reduction device after the combustion device to reduce emissions of hydrogen halide and halogen HAP by ≥99 percent by weight, or to ≤0.45 kg/hr, or to ≤20 ppmv; or ii. Use a halogen reduction device before the combustion device to reduce the halogen atom mass emission rate to ≤0.45 kg/hr or to a concentration ≤20 ppmv.
3. Group 2 continuous process vent at an existing source.	You use a recovery device to maintain the TRE level >1.9 but ≤5.0.	Comply with the requirements in § 63.2450(e)(4) and the requirements in § 63.993 and the requirements referenced therein.
4. Group 2 continuous process vent at a new source.	You use a recovery device to maintain the TRE level >5.0 but ≤8.0.	Comply with the requirements in § 63.2450(e)(4) and the requirements in § 63.993 and the requirements referenced therein.
5. Continuous process vent	Beginning no later than the compliance dates specified in § 63.2445(i), the continuous process vent contains ethylene oxide such that it is considered to be in ethylene oxide service as defined in § 63.2550.	Comply with the applicable emission limits specified in items 1 through 4 of this Table, and also: i. Reduce emissions of ethylene oxide by venting emissions through a closed-vent system to a flare; or ii. Reduce emissions of ethylene oxide by venting emissions through a closed-vent system to a control device that reduces ethylene oxide by ≥99.9 percent by weight, or to a concentration <1 ppmv for each process vent or to <5 pounds per year for all combined process vents.

[85 FR 49161, Aug. 12, 2020]

sfrattini on LAPJZKW1R2 with $$_JOB
VerDate Sep<11>2014 09:16 Apr 04, 2023 Jkt 256165 PO 00000 Frm 00509 Fmt 8010 Sfmt 8026 Q:\40\256165.XXX PC31

TABLE 2 TO SUBPART FFFF OF PART 63—EMISSION LIMITS AND WORK PRACTICE STANDARDS FOR BATCH PROCESS VENTS

As required in § 63.2460, you must meet each emission limit and work practice standard in the following table that applies to your batch process vents:

For each . . .	Then you must . . .	And you must . . .
1. Process with Group 1 batch process vents.	a. Reduce collective uncontrolled organic HAP emissions from the sum of all batch process vents within the process by ≥98 percent by weight by venting emissions from a sufficient number of the vents through one or more closed-vent systems to any combination of control devices (except a flare); or	Not applicable.
	b. Reduce collective uncontrolled organic HAP emissions from the sum of all batch process vents within the process by ≥95 percent by weight by venting emissions from a sufficient number of the vents through one or more closed-vent systems to any combination of recovery devices or a biofilter, except you may elect to comply with the requirements of subpart WW of this part for any process tank; or	Not applicable.
	c. Reduce uncontrolled organic HAP emissions from one or more batch process vents within the process by venting through a closed-vent system to a flare or by venting through one or more closed-vent systems to any combination of control devices (excluding a flare) that reduce organic HAP to an outlet concentration ≤20 ppmv as TOC or total organic HAP.	For all other batch process vents within the process, reduce collective organic HAP emissions as specified in item 1.a and/or item 1.b of this Table.
2. Halogenated Group 1 batch process vent for which you use a combustion device to control organic HAP emissions.	a. Use a halogen reduction device after the combustion control device; or	i. Reduce overall emissions of hydrogen halide and halogen HAP by ≥99 percent; or ii. Reduce overall emissions of hydrogen halide and halogen HAP to ≤0.45 kg/hr; or iii. Reduce overall emissions of hydrogen halide and halogen HAP to a concentration ≤20 ppmv.
	b. Use a halogen reduction device before the combustion control device.	Reduce the halogen atom mass emission rate to ≤0.45 kg/hr or to a concentration ≤20 ppmv.
3. Batch process vent that contains ethylene oxide such that it is considered to be in ethylene oxide service as defined in § 63.2550.	Beginning no later than the compliance dates specified in § 63.2445(i), comply with the applicable emission limits specified in items 1 and 2 of this Table, and also: i. Reduce emissions of ethylene oxide by venting emissions through a closed-vent system to a flare; or ii. Reduce emissions of ethylene oxide by venting emissions through a closed-vent system to a control device that reduces ethylene oxide by ≥99.9 percent by weight, or to a concentration <1 ppmv for each process vent or to <5 pounds per year for all combined process vents.	Not applicable.

[85 FR 49161, Aug. 12, 2020]

TABLE 3 TO SUBPART FFFF OF PART 63—EMISSION LIMITS FOR HYDROGEN HALIDE AND HALOGEN HAP EMISSIONS OR HAP METALS EMISSIONS FROM PROCESS VENTS

As required in § 63.2465, you must meet each emission limit in the following table that applies to your process vents that contain hydrogen halide and halogen HAP emissions or PM HAP emissions:

For each . . .	You must . . .
1. Process with uncontrolled hydrogen halide and halogen HAP emissions from process vents ≥1,000 lb/yr.	a. Reduce collective hydrogen halide and halogen HAP emissions by ≥99 percent by weight or to an outlet concentration ≤20 ppmv by venting through one or more closed-vent systems to any combination of control devices, or

sfrattini on LAPJZKW1R2 with $$_JOB
VerDate Sep<11>2014 09:16 Apr 04, 2023 Jkt 256165 PO 00000 Frm 00510 Fmt 8010 Sfmt 8002 Q:\40\256165.XXX PC31

For each . . .	You must . . .
	b. Reduce the halogen atom mass emission rate from the sum of all batch process vents and each individual continuous process vent to ≤0.45 kg/hr by venting through one or more closed-vent systems to a halogen reduction device.
2. Process at a new source with uncontrolled emissions from process vents ≥150 lb/yr of HAP metals.	Reduce overall emissions of HAP metals by ≥97 percent by weight.

[68 FR 63888, Nov. 10, 2003, as amended at 71 FR 40340, July 14, 2006]

TABLE 4 TO SUBPART FFFF OF PART 63—EMISSION LIMITS FOR STORAGE TANKS

As required in § 63.2470, you must meet each emission limit in the following table that applies to your storage tanks:

For each . . .	For which . . .	Then you must . . .
1. Group 1 storage tank	a. The maximum true vapor pressure of total HAP at the storage temperature is ≥76.6 kilopascals.	i. Reduce total HAP emissions by ≥95 percent by weight or to ≤20 ppmv of TOC or organic HAP and ≤20 ppmv of hydrogen halide and halogen HAP by venting emissions through a closed vent system to any combination of control devices (excluding a flare); or ii. Reduce total organic HAP emissions by venting emissions through a closed vent system to a flare; or iii. Comply with the requirements in § 63.2450(e)(4), as applicable; and reduce total HAP emissions by venting emissions to a fuel gas system or process in accordance with § 63.982(d) and the requirements referenced therein.[1]
	b. The maximum true vapor pressure of total HAP at the storage temperature is <76.6 kilopascals.	i. Comply with the requirements of subpart WW of this part, except as specified in § 63.2470; or ii. Reduce total HAP emissions by ≥95 percent by weight or to ≤20 ppmv of TOC or organic HAP and ≤20 ppmv of hydrogen halide and halogen HAP by venting emissions through a closed vent system to any combination of control devices (excluding a flare); or iii. Reduce total organic HAP emissions by venting emissions through a closed vent system to a flare; or iv. Comply with the requirements in § 63.2450(e)(4), as applicable; and reduce total HAP emissions by venting emissions to a fuel gas system or process in accordance with § 63.982(d) and the requirements referenced therein.[1]
2. Halogenated vent stream from a Group 1 storage tank.	You use a combustion control device to control organic HAP emissions.	Meet one of the emission limit options specified in Item 2.a.i or ii. in Table 1 to this subpart.
3. Storage tank of any capacity and vapor pressure.	Beginning no later than the compliance dates specified in § 63.2445(i), the stored liquid contains ethylene oxide such that the storage tank is considered to be in ethylene oxide service as defined in § 63.2550.	Comply with the applicable emission limits specified in items 1 and 2 of this Table, and also: i. Reduce emissions of ethylene oxide by venting emissions through a closed-vent system to a flare; or ii. Reduce emissions of ethylene oxide by venting emissions through a closed-vent system to a control device that reduces ethylene oxide by ≥99.9 percent by weight, or to a concentration <1 ppmv for each storage tank vent.

[1] Beginning no later than the compliance dates specified in § 63.2445(g), any flare using fuel gas from a fuel gas system, of which 50 percent or more of the fuel gas is derived from an MCPU that has processes and/or equipment in ethylene oxide service or that produces olefins or polyolefins, as determined on an annual average basis, must be in compliance with § 63.2450(e)(5). For purposes of compliance, an MCPU that ''produces olefins or polyolefins'' includes only those MCPUs that manufacture ethylene, propylene, polyethylene, and/or polypropylene as a product. By-products and impurities as defined in § 63.101, as well as wastes and trace contaminants, are not considered products.

[85 FR 49162, Aug. 12, 2020]

TABLE 5 TO SUBPART FFFF OF PART 63—EMISSION LIMITS AND WORK PRACTICE STANDARDS FOR TRANSFER RACKS

As required in § 63.2475, you must meet each emission limit and work practice standard in the following table that applies to your transfer racks:

sfrattini on LAPJZKW1R2 with $$_JOB
VerDate Sep<11>2014 09:16 Apr 04, 2023 Jkt 256165 PO 00000 Frm 00511 Fmt 8010 Sfmt 8026 Q:\40\256165.XXX PC31

For each . . .	You must . . .
1. Group 1 transfer rack	a. Reduce emissions of total organic HAP by ≥98 percent by weight or to an outlet concentration ≤20 ppmv as organic HAP or TOC by venting emissions through a closed-vent system to any combination of control devices (except a flare); or b. Reduce emissions of total organic HAP by venting emissions through a closed-vent system to a flare; or c. Comply with the requirements in § 63.2450(e)(4), as applicable; and reduce emissions of total organic HAP by venting emissions to a fuel gas system or process in accordance with § 63.982(d) and the requirements referenced therein;[1] or d. Use a vapor balancing system designed and operated to collect organic HAP vapors displaced from tank trucks and railcars during loading and route the collected HAP vapors to the storage tank from which the liquid being loaded originated or to another storage tank connected by a common header.
2. Halogenated Group 1 transfer rack vent stream for which you use a combustion device to control organic HAP emissions.	a. Use a halogen reduction device after the combustion device to reduce emissions of hydrogen halide and halogen HAP by ≥99 percent by weight, to ≤0.45 kg/hr, or to ≤20 ppmv; or b. Use a halogen reduction device before the combustion device to reduce the halogen atom mass emission rate to ≤0.45 kg/hr or to a concentration ≤20 ppmv.

[1] Beginning no later than the compliance dates specified in § 63.2445(g), any flare using fuel gas from a fuel gas system, of which 50 percent or more of the fuel gas is derived from an MCPU that has processes and/or equipment in ethylene oxide service or that produces olefins or polyolefins, as determined on an annual average basis, must be in compliance with § 63.2450(e)(5). For purposes of compliance, an MCPU that "produces olefins or polyolefins" includes only those MCPUs that manufacture ethylene, propylene, polyethylene, and/or polypropylene as a product. By-products and impurities as defined in § 63.101, as well as wastes and trace contaminants, are not considered products.

[85 FR 49163, Aug. 12, 2020]

Table 6 to Subpart FFFF of Part 63—Requirements for Equipment Leaks

As required in § 63.2480, you must meet each requirement in the following table that applies to your equipment leaks:

For all . . .	And that is part of . . .	You must . . .
1. Equipment that is in organic HAP service.	a. Any MCPU	i. Comply with the requirements of subpart UU of this part and the requirements referenced therein, except as specified in § 63.2480(b) and (d) through (f); or ii. Comply with the requirements of subpart H of this part and the requirements referenced therein, except as specified in § 63.2480(b) and (d) through (f); or iii. Comply with the requirements of 40 CFR part 65, subpart F, and the requirements referenced therein, except as specified in § 63.2480(c), and (d) through (f).
2. Equipment that is in organic HAP service at a new source.	a. Any MCPU	i. Comply with the requirements of subpart UU of this part and the requirements referenced therein, except as specified in § 63.2480(b)(6) and (7), (e), and (f); or ii. Comply with the requirements of 40 CFR part 65, subpart F, except as specified in § 63.2480(c)(10) and (11), (e), and (f).
3. Equipment that is in ethylene oxide service as defined in § 63.2550.	a. Any MCPU	i. Beginning no later than the compliance dates specified in § 63.2445(i), comply with the requirements of subpart UU of this part and the requirements referenced therein, except as specified in § 63.2493(d) and (e); or ii. Beginning no later than the compliance dates specified in § 63.2445(i), comply with the requirements of subpart H of this part and the requirements referenced therein, except as specified in § 63.2493(d) and (e); iii. Beginning no later than the compliance dates specified in § 63.2445(i), comply with the requirements of 40 CFR part 65, subpart F, and the requirements referenced therein, except as specified in § 63.2493(d) and (e).

[85 FR 49163, Aug. 12, 2020]

Table 7 to Subpart FFFF of Part 63—Requirements for Wastewater Streams and Liquid Streams in Open Systems Within an MCPU

As required in § 63.2485, you must meet each requirement in the following table that applies to your wastewater streams and liquid streams in open systems within an MCPU:

sfrattini on LAPJZKW1R2 with $$_JOB
VerDate Sep<11>2014 09:16 Apr 04, 2023 Jkt 256165 PO 00000 Frm 00512 Fmt 8010 Sfmt 8026 Q:\40\256165.XXX PC31

For each . . .	You must . . .
1. Process wastewater stream	Comply with the requirements in §§ 63.132 through 63.148 and the requirements referenced therein, except as specified in § 63.2485.
2. Maintenance wastewater stream	Comply with the requirements in § 63.105 and the requirements referenced therein, except as specified in § 63.2485.
3. Liquid streams in an open system within an MCPU.	Comply with the requirements in § 63.149 and the requirements referenced therein, except as specified in § 63.2485.

Table 8 to Subpart FFFF of Part 63—Partially Soluble Hazardous Air Pollutants

As specified in § 63.2485, the partially soluble HAP in wastewater that are subject to management and treatment requirements in this subpart FFFF are listed in the following table:

Chemical name . . .	CAS No.
1. 1,1,1–Trichloroethane (methyl chloroform)	71556
2. 1,1,2,2–Tetrachloroethane	79345
3. 1,1,2–Trichloroethane	79005
4. 1,1–Dichloroethylene (vinylidene chloride)	75354
5. 1,2–Dibromoethane	106934
6. 1,2–Dichloroethane (ethylene dichloride)	107062
7. 1,2–Dichloropropane	78875
8. 1,3–Dichloropropene	542756
9. 2,4,5–Trichlorophenol	95954
10. 1,4–Dichlorobenzene	106467
11. 2–Nitropropane	79469
12. 4–Methyl-2-pentanone (MIBK)	108101
13. Acetaldehyde	75070
14. Acrolein	107028
15. Acrylonitrile	107131
16. Allyl chloride	107051
17. Benzene	71432
18. Benzyl chloride	100447
19. Biphenyl	92524
20. Bromoform (tribromomethane)	75252
21. Bromomethane	74839
22. Butadiene	106990
23. Carbon disulfide	75150
24. Chlorobenzene	108907
25. Chloroethane (ethyl chloride)	75003
26. Chloroform	67663
27. Chloromethane	74873
28. Chloroprene	126998
29. Cumene	98828
30. Dichloroethyl ether	111444
31. Dinitrophenol	51285
32. Epichlorohydrin	106898
33. Ethyl acrylate	140885
34. Ethylbenzene	100414
35. Ethylene oxide	75218
36. Ethylidene dichloride	75343
37. Hexachlorobenzene	118741
38. Hexachlorobutadiene	87683
39. Hexachloroethane	67721
40. Methyl methacrylate	80626
41. Methyl-t-butyl ether	1634044
42. Methylene chloride	75092
43. N-hexane	110543
44. N,N-dimethylaniline	121697
45. Naphthalene	91203
46. Phosgene	75445
47. Propionaldehyde	123386
48. Propylene oxide	75569
49. Styrene	100425
50. Tetrachloroethylene (perchloroethylene)	127184
51. Tetrachloromethane (carbon tetrachloride)	56235
52. Toluene	108883
53. Trichlorobenzene (1,2,4-)	120821
54. Trichloroethylene	79016
55. Trimethylpentane	540841
56. Vinyl acetate	108054
57. Vinyl chloride	75014
58. Xylene (m)	108383

sfrattini on LAPJZKW1R2 with $$_JOB
VerDate Sep<11>2014 09:16 Apr 04, 2023 Jkt 256165 PO 00000 Frm 00513 Fmt 8010 Sfmt 8002 Q:\40\256165.XXX PC31

Chemical name . . .	CAS No.
59. Xylene (o)	95476
60. Xylene (p)	106423

[68 FR 63888, Nov. 10, 2003, as amended at 70 FR 38560, July 1, 2005; 71 FR 40341, July 14, 2006]

TABLE 9 TO SUBPART FFFF OF PART 63—SOLUBLE HAZARDOUS AIR POLLUTANTS

As specified in § 63.2485, the soluble HAP in wastewater that are subject to management and treatment requirements of this subpart FFFF are listed in the following table:

Chemical name . . .	CAS No.
1. Acetonitrile	75058
2. Acetophenone	98862
3. Diethyl sulfate	64675
4. Dimethyl hydrazine (1,1)	57147
5. Dimethyl sulfate	77781
6. Dinitrotoluene (2,4)	121142
7. Dioxane (1,4)	123911
8. Ethylene glycol dimethyl ether	110714
9. Ethylene glycol monobutyl ether acetate	112072
10. Ethylene glycol monomethyl ether acetate	110496
11. Isophorone	78591
12. Methanol	67561
13. Nitrobenzene	98953
14. Toluidine (o-)	95534
15. Triethylamine	121448

[68 FR 63888, Nov. 10, 2003, as amended at 70 FR 38561, July 1, 2005]

TABLE 10 TO SUBPART FFFF OF PART 63—WORK PRACTICE STANDARDS FOR HEAT EXCHANGE SYSTEMS

As required in § 63.2490, you must meet each requirement in the following table that applies to your heat exchange systems:

For each . . .	You must . . .
Heat exchange system, as defined in § 63.101	a. Comply with the requirements of § 63.104 and the requirements referenced therein, except as specified in § 63.2490(b) and (c); or b. Comply with the requirements in § 63.2490(d).

[85 FR 49164, Aug. 12, 2020]

TABLE 11 TO SUBPART FFFF OF PART 63—REQUIREMENTS FOR REPORTS

As required in § 63.2520(a) and (b), you must submit each report that applies to you on the schedule shown in the following table:

You must submit a(n)	The report must contain . . .	You must submit the report . . .
1. Precompliance report	The information specified in § 63.2520(c).	At least 6 months prior to the compliance date; or for new sources, with the application for approval of construction or reconstruction.
2. Notification of compliance status report.	The information specified in § 63.2520(d).	No later than 150 days after the compliance date specified in § 63.2445.
3. Compliance report	The information specified in § 63.2520(e).	Semiannually according to the requirements in § 63.2520(b).

TABLE 12 TO SUBPART FFFF OF PART 63—APPLICABILITY OF GENERAL PROVISIONS TO SUBPART FFFF

As specified in § 63.2540, the parts of the General Provisions that apply to you are shown in the following table:

Citation	Subject	Explanation
§ 63.1	Applicability	Yes.
§ 63.2	Definitions	Yes.

sfrattini on LAPJZKW1R2 with $$_JOB
VerDate Sep<11>2014 09:16 Apr 04, 2023 Jkt 256165 PO 00000 Frm 00514 Fmt 8010 Sfmt 8002 Q:\40\256165.XXX PC31

Citation	Subject	Explanation
§ 63.3	Units and Abbreviations	Yes.
§ 63.4	Prohibited Activities	Yes.
§ 63.5	Construction/Reconstruction	Yes.
§ 63.6(a)	Applicability	Yes.
§ 63.6(b)(1)–(4)	Compliance Dates for New and Reconstructed sources.	Yes.
§ 63.6(b)(5)	Notification	Yes.
§ 63.6(b)(6)	[Reserved].	
§ 63.6(b)(7)	Compliance Dates for New and Reconstructed Area Sources That Become Major.	Yes.
§ 63.6(c)(1)–(2)	Compliance Dates for Existing Sources	Yes.
§ 63.6(c)(3)–(4)	[Reserved].	
§ 63.6(c)(5)	Compliance Dates for Existing Area Sources That Become Major.	Yes.
§ 63.6(d)	[Reserved].	
§ 63.6(e)(1)(i)	Operation & Maintenance	Yes, before August 12, 2023. No, beginning on and after August 12, 2023. See § 63.2450(u) for general duty requirement.
§ 63.6(e)(1)(ii)	Operation & Maintenance	Yes, before August 12, 2023. No, beginning on and after August 12, 2023.
§ 63.6(e)(1)(iii)	Operation & Maintenance	Yes.
§ 63.6(e)(2)	[Reserved].	
§ 63.6(e)(3)(i), (iii), and (v) through (viii).	Startup, Shutdown, Malfunction Plan (SSMP)	Yes, before August 12, 2023, except information regarding Group 2 emission points and equipment leaks is not required in the SSMP, as specified in § 63.2525(j). No, beginning on and after August 12, 2023.
§ 63.6(e)(3)(iii) and (iv)	Recordkeeping and Reporting During SSM	No, see § 63.2525 for recordkeeping requirements and § 63.2520(e)(4) for reporting requirements.
§ 63.6(e)(3)(ix)	SSMP incorporation into title V permit	Yes, before August 12, 2023. No beginning on and after August 12, 2023.
§ 63.6(f)(1)	Compliance With Non-Opacity Standards Except During SSM.	No. See § 63.2445(g) through (i).
§ 63.6(f)(2)–(3)	Methods for Determining Compliance	Yes.
§ 63.6(g)(1)–(3)	Alternative Standard	Yes.
§ 63.6(h)(1)	Compliance with Opacity Standards Except During SSM.	No. See § 63.2445(g) through (i).
§ 63.6(h)(2)–(9)	Opacity/Visible Emission (VE) Standards	Only for flares for which Method 22 of 40 CFR part 60, appendix A–7, observations are required as part of a flare compliance assessment.
§ 63.6(i)(1)–(14), and (16)	Compliance Extension	Yes.
§ 63.6(j)	Presidential Compliance Exemption	Yes.
§ 63.7(a)(1)–(2)	Performance Test Dates	Yes, except substitute 150 days for 180 days.
§ 63.7(a)(3)	Section 114 Authority	Yes, and this paragraph also applies to flare compliance assessments as specified under § 63.997(b)(2).
§ 63.7(a)(4)	Force Majeure	Yes.
§ 63.7(b)(1)	Notification of Performance Test	Yes.
§ 63.7(b)(2)	Notification of Rescheduling	Yes.
§ 63.7(c)	Quality Assurance/Test Plan	Yes, except the test plan must be submitted with the notification of the performance test if the control device controls batch process vents.
§ 63.7(d)	Testing Facilities	Yes.
§ 63.7(e)(1)	Conditions for Conducting Performance Tests	Yes, before August 12, 2023 except that performance tests for batch process vents must be conducted under worst-case conditions as specified in § 63.2460. No, beginning on and after August 12, 2023. See § 63.2450(g)(6).
§ 63.7(e)(2)	Conditions for Conducting Performance Tests	Yes.
§ 63.7(e)(3)	Test Run Duration	Yes.
§ 63.7(e)(4)	Administrator's Authority to Require Testing	Yes.
§ 63.7(f)	Alternative Test Method	Yes.
§ 63.7(g)	Performance Test Data Analysis	Yes, except this subpart specifies how and when the performance test and performance evaluation results are reported.
§ 63.7(h)	Waiver of Tests	Yes.
§ 63.8(a)(1)	Applicability of Monitoring Requirements	Yes.
§ 63.8(a)(2)	Performance Specifications	Yes.
§ 63.8(a)(3)	[Reserved].	
§ 63.8(a)(4)	Monitoring with Flares	Yes, except for flares subject to § 63.2450(e)(5).
§ 63.8(b)(1)	Monitoring	Yes.

sfrattini on LAPJZKW1R2 with $$_JOB
VerDate Sep<11>2014 09:16 Apr 04, 2023 Jkt 256165 PO 00000 Frm 00515 Fmt 8010 Sfmt 8002 Q:\40\256165.XXX PC31

Citation	Subject	Explanation
§ 63.8(b)(2)–(3)	Multiple Effluents and Multiple Monitoring Systems.	Yes.
§ 63.8(c)(1)	Monitoring System Operation and Maintenance	Yes.
§ 63.8(c)(1)(i)	Routine and Predictable SSM	Yes, before August 12, 2023. No, beginning on and after August 12, 2023.
§ 63.8(c)(1)(ii)	CMS malfunction not in SSM plan	Yes.
§ 63.8(c)(1)(iii)	Compliance with Operation and Maintenance Requirements.	Yes, before August 12, 2023. No, beginning on and after August 12, 2023.
§ 63.8(c)(2)–(3)	Monitoring System Installation	Yes.
§ 63.8(c)(4)	CMS Requirements	Only for CEMS. Requirements for CPMS are specified in referenced subparts G and SS of this part. Requirements for COMS do not apply because this subpart does not require continuous opacity monitoring systems (COMS).
§ 63.8(c)(4)(i)	COMS Measurement and Recording Frequency	No; this subpart does not require COMS.
§ 63.8(c)(4)(ii)	CEMS Measurement and Recording Frequency	Yes.
§ 63.8(c)(5)	COMS Minimum Procedures	No. This subpart does not contain opacity or VE limits.
§ 63.8(c)(6)	CMS Requirements	Only for CEMS; requirements for CPMS are specified in referenced subparts G and SS of this part. Requirements for COMS do not apply because this subpart does not require COMS.
§ 63.8(c)(7)–(8)	CMS Requirements	Only for CEMS. Requirements for CPMS are specified in referenced subparts G and SS of this part. Requirements for COMS do not apply because this subpart does not require COMS.
§ 63.8(d)(1)	CMS Quality Control	Only for CEMS.
§ 63.8(d)(2)	CMS Quality Control	Only for CEMS.
§ 63.8(d)(3)	CMS Quality Control	Yes, only for CEMS before August 12, 2023. No, beginning on and after August 12, 2023. See § 63.2450(j)(6).
§ 63.8(e)	CMS Performance Evaluation	Only for CEMS, except this subpart specifies how and when the performance evaluation results are reported. Section 63.8(e)(5)(ii) does not apply because this subpart does not require COMS.
§ 63.8(f)(1)–(5)	Alternative Monitoring Method	Yes, except you may also request approval using the precompliance report.
§ 63.8(f)(6)	Alternative to Relative Accuracy Test	Only applicable when using CEMS to demonstrate compliance, including the alternative standard in § 63.2505.
§ 63.8(g)(1)–(4)	Data Reduction	Only when using CEMS, including for the alternative standard in § 63.2505, except that the requirements for COMS do not apply because this subpart has no opacity or VE limits, and § 63.8(g)(2) does not apply because data reduction requirements for CEMS are specified in § 63.2450(j).
§ 63.8(g)(5)	Data Reduction	No. Requirements for CEMS are specified in § 63.2450(j). Requirements for CPMS are specified in referenced subparts G and SS of this part.
§ 63.9(a)	Notification Requirements	Yes.
§ 63.9(b)(1)–(5)	Initial Notifications	Yes.
§ 63.9(c)	Request for Compliance Extension	Yes.
§ 63.9(d)	Notification of Special Compliance Requirements for New Source.	Yes.
§ 63.9(e)	Notification of Performance Test	Yes.
§ 63.9(f)	Notification of VE/Opacity Test	No.
§ 63.9(g)	Additional Notifications When Using CMS	Only for CEMS. Section 63.9(g)(2) does not apply because this subpart does not require COMS.
63.9(h)(1)–(6)	Notification of Compliance Status	Yes, except § 63.9(h)(2)(i)(A) through (G) and (h)(2)(ii) do not apply because § 63.2520(d) specifies the required contents and due date of the notification of compliance status report.
§ 63.9(i)	Adjustment of Submittal Deadlines	Yes.
§ 63.9(j)	Change in previous information	Yes, for change in major source status, otherwise § 63.2520(e) specifies reporting requirements for process changes.
§ 63.9(k)	Electronic reporting procedures	Yes, as specified in § 63.9(j).

sfrattini on LAPJZKW1R2 with $$_JOB
VerDate Sep<11>2014 09:16 Apr 04, 2023 Jkt 256165 PO 00000 Frm 00516 Fmt 8010 Sfmt 8002 Q:\40\256165.XXX PC31

Citation	Subject	Explanation
§ 63.10(a)	Recordkeeping/Reporting	Yes.
§ 63.10(b)(1)	Recordkeeping/Reporting	Yes.
§ 63.10(b)(2)(i)	Records related to startup and shutdown	No, see §§ 63.2450(e) and 63.2525 for recordkeeping requirements.
§ 63.10(b)(2)(ii)	Recordkeeping relevant to SSM periods and CMS.	Yes, before August 12, 2023. No, beginning on and after August 12, 2023. See § 63.2525(h) and (l).
§ 63.10(b)(2)(iii)	Records related to maintenance of air pollution control equipment.	Yes.
§ 63.10(b)(2)(iv) and (v)	Recordkeeping relevant to SSM period	Yes, before August 12, 2023. No, beginning on and after August 12, 2023.
§ 63.10(b)(2)(vi)	CMS Records	Before August 12, 2023, yes but only for CEMS; requirements for CPMS are specified in referenced subparts G and SS of this part. Beginning on and after August 12, 2023, yes for CEMS and CPMS for flares subject to § 63.2450(e)(5).
§ 63.10(b)(2)(x) and (xi)	CMS Records	Only for CEMS; requirements for CPMS are specified in referenced subparts G and SS of this part.
§ 63.10(b)(2)(vii)–(ix)	Records	Yes.
§ 63.10(b)(2)(xii)	Records	Yes.
§ 63.10(b)(2)(xiii)	Records	Only for CEMS.
§ 63.10(b)(2)(xiv)	Records	Yes.
§ 63.10(b)(3)	Records	Yes.
§ 63.10(c)(1)–(6),(9)–(14)	Records	Only for CEMS. Recordkeeping requirements for CPMS are specified in referenced subparts G and SS of this part.
§ 63.10(c)(7)–(8)	Records	No. Recordkeeping requirements are specified in § 63.2525.
§ 63.10(c)(15)	Records	Yes, before August 12, 2023, but only for CEMS. No, beginning on and after August 12, 2023.
§ 63.10(d)(1)	General Reporting Requirements	Yes.
§ 63.10(d)(2)	Report of Performance Test Results	Yes, before October 13, 2020. No, beginning on and after October 13, 2020.
§ 63.10(d)(3)	Reporting Opacity or VE Observations	No.
§ 63.10(d)(4)	Progress Reports	Yes.
§ 63.10(d)(5)(i)	Periodic Startup, Shutdown, and Malfunction Reports.	No, § 63.2520(e)(4) and (5) specify the SSM reporting requirements.
§ 63.10(d)(5)(ii)	Immediate SSM Reports	No.
§ 63.10(e)(1)	Additional CEMS Reports	Yes.
§ 63.10(e)(2)(i)	Additional CMS Reports	Only for CEMS, except this subpart specifies how and when the performance evaluation results are reported.
§ 63.10(e)(2)(ii)	Additional COMS Reports	No. This subpart does not require COMS.
§ 63.10(e)(3)	Reports	No. Reporting requirements are specified in § 63.2520.
§ 63.10(e)(3)(i)–(iii)	Reports	No. Reporting requirements are specified in § 63.2520.
§ 63.10(e)(3)(iv)–(v)	Excess Emissions Reports	No. Reporting requirements are specified in § 63.2520.
§ 63.10(e)(3)(iv)–(v)	Excess Emissions Reports	No. Reporting requirements are specified in § 63.2520.
§ 63.10(e)(3)(vi)–(viii)	Excess Emissions Report and Summary Report	No. Reporting requirements are specified in § 63.2520.
§ 63.10(e)(4)	Reporting COMS data	No.
§ 63.10(f)	Waiver for Recordkeeping/Reporting	Yes.
§ 63.11	Control device requirements for flares and work practice requirements for equipment leaks.	Yes, except for flares subject to § 63.2450(e)(5).
§ 63.12	Delegation	Yes.
§ 63.13	Addresses	Yes.
§ 63.14	Incorporation by Reference	Yes.
§ 63.15	Availability of Information	Yes.

[85 FR 49164, Aug. 12, 2020, as amended at 85 FR 73903, Nov. 19, 2020]

sfrattini on LAPJZKW1R2 with $$_JOB
VerDate Sep<11>2014 09:16 Apr 04, 2023 Jkt 256165 PO 00000 Frm 00517 Fmt 8010 Sfmt 8026 Q:\40\256165.XXX PC31

Subpart GGGG—National Emission Standards for Hazardous Air Pollutants: Solvent Extraction for Vegetable Oil Production

SOURCE: 66 FR 19011, Apr. 12, 2001, unless otherwise noted.

WHAT THIS SUBPART COVERS

§ 63.2830 What is the purpose of this subpart?

This subpart establishes national emission standards for hazardous air pollutants (NESHAP) for emissions during vegetable oil production. This subpart limits hazardous air pollutant (HAP) emissions from specified vegetable oil production processes. This subpart also establishes requirements to demonstrate initial and continuous compliance with the emission standards.

§ 63.2831 Where can I find definitions of key words used in this subpart?

You can find definitions of key words used in this subpart in § 63.2872.

§ 63.2832 Am I subject to this subpart?

(a) You are an affected source subject to this subpart if you meet all of the criteria listed in paragraphs (a)(1) and (2) of this section:

(1) You own or operate a vegetable oil production process that is a major source of HAP emissions or is collocated within a plant site with other sources that are individually or collectively a major source of HAP emissions.

(i) A *vegetable oil production process* is defined in § 63.2872. In general, it is the collection of continuous process equipment and activities that produce crude vegetable oil and meal products by removing oil from oilseeds listed in Table 1 to § 63.2840 through direct contact with an organic solvent, such as a hexane isomer blend.

(ii) A major source of HAP emissions is a plant site that emits or has the potential to emit any single HAP at a rate of 10 tons (9.07 megagrams) or more per year or any combination of HAP at a rate of 25 tons (22.68 megagrams) or more per year.

(2) Your vegetable oil production process processes any combination of eight types of oilseeds listed in paragraphs (a)(2)(i) through (viii) of this section:

(i) Corn germ;

(ii) Cottonseed;

(iii) Flax;

(iv) Peanut;

(v) Rapeseed (for example, canola);

(vi) Safflower;

(vii) Soybean; and

(viii) Sunflower.

(b) You are not subject to this subpart if your vegetable oil production process meets any of the criteria listed in paragraphs (b)(1) through (4) of this section:

(1) It uses only mechanical extraction techniques that use no organic solvent to remove oil from a listed oilseed.

(2) It uses only batch solvent extraction and batch desolventizing equipment.

(3) It processes only agricultural products that are not listed oilseeds as defined in § 63.2872.

(4) It functions only as a research and development facility and is not a major source.

(c) As listed in § 63.1(c)(5) of the General Provisions, if your HAP emissions increase such that you become a major source, then you are subject to all of the requirements of this subpart.

§ 63.2833 Is my source categorized as existing or new?

(a) This subpart applies to each existing and new affected source. You must categorize your vegetable oil production process as either an existing or a new source in accordance with the criteria in Table 1 of this section, as follows:

TABLE 1 TO § 63.2833—CATEGORIZING YOUR SOURCE AS EXISTING OR NEW

If your affected source. . .	And if. . .	Then your affected source. . .
(1) was constructed or began construction before May 26, 2000.	reconstruction has not occurred	is an existing source.

sfrattini on LAPJZKW1R2 with $$_JOB
VerDate Sep<11>2014 09:16 Apr 04, 2023 Jkt 256165 PO 00000 Frm 00518 Fmt 8010 Sfmt 8010 Q:\40\256165.XXX PC31

TABLE 1 TO §63.2833—CATEGORIZING YOUR SOURCE AS EXISTING OR NEW—Continued

If your affected source. . .	And if. . .	Then your affected source. . .
(2) began reconstruction, as defined in §63.2, on or after May 26, 2000.	(i) reconstruction was part of a scheduled plan to comply with the existing source requirements of this subpart; and. (ii) reconstruction was completed no later than 3 years after the effective date of this subpart.	remains an existing source.
(3) began a significant modification, as defined in §63.2872, at any time on an existing source.	the modification does not constitute reconstruction.	remains an existing source.
(4) began a significant modification, as defined in §63.2872, at any time on a new source.	the modification does not constitute reconstruction.	remains a new source.
(5) began reconstruction on or after May 26, 2000.	reconstruction was completed later than 3 years after the effective date of this subpart.	is a new source
(6) began construction on or after May 26, 2000.	.....	is a new source.

(b) *Reconstruction of a source.* Any affected source is reconstructed if components are replaced so that the criteria in the definition of *reconstruction* in §63.2 are satisfied. In general, a vegetable oil production process is reconstructed if the fixed capital cost of the new components exceeds 50 percent of the fixed capital cost for constructing a new vegetable oil production process, and it is technically and economically feasible for the reconstructed source to meet the relevant new source requirements of this subpart. The effect of reconstruction on the categorization of your existing and new affected source is described in paragraphs (b)(1) and (2) of this section:

(1) After reconstruction of an existing source, the affected source is recategorized as a new source and becomes subject to the new source requirements of this subpart.

(2) After reconstruction of a new source, the affected source remains categorized as a new source and remains subject to the new source requirements of this subpart.

(c) *Significant modification of a source.* A significant modification to an affected source is a term specific to this subpart and is defined in §63.2872.

(1) In general, a significant modification to your source consists of adding new equipment or the modification of existing equipment within the affected source that significantly affects solvent losses from the affected source. Examples include adding or replacing extractors, desolventizer-toasters (conventional and specialty), and meal dryer-coolers. All other significant modifications must meet the criteria listed in paragraphs (c)(1)(i) and (ii) of this section:

(i) The fixed capital cost of the modification represents a significant percentage of the fixed capital cost of building a comparable new vegetable oil production process.

(ii) It does not constitute reconstruction as defined in §63.2.

(2) A significant modification has no effect on the categorization of your source as existing and new. An existing source remains categorized as an existing source and subject to the existing source requirements of this subpart. A new source remains categorized as a new source and subject to the new source requirements of this subpart.

(d) Changes in the type of oilseed processed by your affected source does not affect the categorization of your source as new or existing. Recategorizing an affected source from existing to new occurs only when you add or modify process equipment within the source which meets the definition of *reconstruction*.

sfrattini on LAPJZKW1R2 with $$_JOB
VerDate Sep<11>2014 09:16 Apr 04, 2023 Jkt 256165 PO 00000 Frm 00519 Fmt 8010 Sfmt 8010 Q:\40\256165.XXX PC31

§ 63.2834 When do I have to comply with the standards in this subpart?

You must comply with this subpart in accordance with one of the schedules in Table 1 of this section, as follows:

TABLE 1 OF § 63.2834—COMPLIANCE DATES FOR EXISTING AND NEW SOURCES

If your affected source is categorized as . . .	And if . . .	Then your compliance date is . . .	Except for certain requirements, as specified in §§ 63.2840, 63.2850, 63.2851, 63.2852, 63.2853, 63.2861, 63.2862, and 63.2870, then your compliance date is . . .
(a) an existing source ...		April 12, 2004	September 15, 2020.
(b) a new source	you startup your affected source before April 12, 2001.	April 12, 2004	September 15, 2020.
(c) a new source	you startup your affected source on or after April 12, 2001, but before March 18, 2020.	your startup date.	September 15, 2020.
(d) a new source	you startup your affected source on or after March 18, 2020.	your startup date.	your startup date.

[66 FR 19011, Apr. 12, 2001, as amended at 85 FR 15626, Mar. 18, 2020]

STANDARDS

§ 63.2840 What emission requirements must I meet?

For each facility meeting the applicability criteria in § 63.2832, you must comply with either the requirements specified in paragraphs (a) through (d), or the requirements in paragraph (e) of this section. You must also comply with the requirements in paragraph (g) of this section. You must comply with the work practice standard provided in paragraph (h) of this section, if you choose to operate your source under an initial startup period subject to § 63.2850(c)(2) or (d)(2).

(a)(1) The emission requirements limit the number of gallons of HAP lost per ton of listed oilseeds processed. For each operating month, as defined in § 63.2872, you must calculate a compliance ratio which compares your actual HAP loss to your allowable HAP loss for the previous 12 operating months as shown in Equation 1 of this section. Equation 1 of this section follows:

$$\text{Compliance Ratio} = \frac{\text{Actual Hap Loss}}{\text{Allowable Hap Loss}} \qquad \text{(Eq. 1)}$$

(2) Equation 1 of this section can also be expressed as a function of total solvent loss as shown in Equation 2 of this section. Equation 2 of this section follows:

$$\text{Compliance Ratio} = \frac{f * \text{Actual Solvent Loss}}{0.64 * \sum_{i=1}^{n}\left((\text{Oilseed})_i * (\text{SLF})_i\right)} \qquad \text{(Eq. 2)}$$

Where:

f = The weighted average volume fraction of HAP in solvent received during the previous 12 operating months, as determined in § 63.2854, dimensionless.

0.64 = The average volume fraction of HAP in solvent in the baseline performance data, dimensionless.

sfrattini on LAPJZKW1R2 with $$_JOB
VerDate Sep<11>2014 09:16 Apr 04, 2023 Jkt 256165 PO 00000 Frm 00520 Fmt 8010 Sfmt 8010 Q:\40\256165.XXX PC31
ER12AP01.001</MATH> ER12AP01.002</MATH>

Actual Solvent Loss = Gallons of actual solvent loss during previous 12 operating months, as determined in § 63.2853.

Oilseed = Tons of each oilseed type ''i'' processed during the previous 12 operating months, as shown in § 63.2855.

SLF = The corresponding solvent loss factor (gal/ton) for oilseed ''i'' listed in Table 1 of this section, as follows:

TABLE 1 OF § 63.2840—OILSEED SOLVENT LOSS FACTORS FOR DETERMINING ALLOWABLE HAP LOSS

Type of oilseed process	A source that...	Oilseed solvent loss factor (gal/ton)	
		Existing sources	New sources
(i) Corn Germ, Wet Milling	processes corn germ that has been separated from other corn components using a "wet" process of centrifuging a slurry steeped in a dilute sulfurous acid solution.	0.4	0.3
(ii) Corn Germ, Dry Milling	processes corn germ that has been separated from the other corn components using a "dry" process of mechanical chafing and air sifting.	0.7	0.7
(iii) Cottonseed, Large	processes 120,000 tons or more of a combination of cottonseed and other listed oilseeds during all normal operating periods in a 12 operating month period.	0.5	0.4
(iv) Cottonseed, Small	processes less than 120,000 tons of a combination of cottonseed and other listed oilseeds during all normal operating periods in a 12 operating month period.	0.7	0.4
(v) Flax	processes flax	0.6	0.6
(vi) Peanuts	processes peanuts	1.2	0.7
(vii) Rapeseed	processes rapeseed	0.7	0.3
(viii) Safflower	processes safflower	0.7	0.7
(ix) Soybean, Conventional	uses a conventional style desolventizer to produce crude soybean oil products and soybean animal feed products.	0.2	0.2
(x) Soybean, Specialty	uses a special style desolventizer to produce soybean meal products for human and animal consumption.	1.7	1.5
(xi) Soybean, Combination Plant with Low Specialty Production.	processes soybeans in both specialty and conventional desolventizers and the quantity of soybeans processed in specialty desolventizers during normal operating periods is less than 3.3 percent of total soybeans processed during all normal operating periods in a 12 operating month period. The corresponding solvent loss factor is an overall value and applies to the total quantity of soybeans processed..	0.25	0.25
(xii) Sunflower	processes sunflower	0.4	0.3

(b) When your source has processed listed oilseed for 12 operating months, calculate the compliance ratio by the end of each calendar month following an operating month, as defined in § 63.2872, using Equation 2 of this section. When calculating your compliance ratio, consider the conditions and exclusions in paragraphs (b)(1) through (6) of this section:

(1) [Reserved]

(2) The 12-month compliance ratio may include operating months occurring prior to a source shutdown and operating months that follow after the source resumes operation.

(3) If your source shuts down and processes no listed oilseed for an entire calendar or accounting month, then you must categorize the month as a nonoperating month, as defined in § 63.2872. Exclude any nonoperating months from the compliance ratio determination.

(4) If your source is subject to an initial startup period as defined in § 63.2872, you may exclude from the compliance ratio determination any solvent and oilseed information recorded for the initial startup period, provided you meet the work practice standard in § 63.2850(c)(2) or (d)(2).

sfrattini on LAPJZKW1R2 with $$_JOB
VerDate Sep<11>2014 09:16 Apr 04, 2023 Jkt 256165 PO 00000 Frm 00521 Fmt 8010 Sfmt 8010 Q:\40\256165.XXX PC31

(5) Before September 15, 2020, if your source is subject to a malfunction period as defined in § 63.2872, exclude from the compliance ratio determination any solvent and oilseed information recorded for the malfunction period. The provisions of this paragraph (e) do not apply on and after September 15, 2020.

(6) For sources processing cottonseed or specialty soybean, the solvent loss factor you use to determine the compliance ratio may change each operating month depending on the tons of oilseed processed during all normal operating periods in a 12 operating month period.

(c) If the compliance ratio is less than or equal to 1.00, your source was in compliance with the HAP emission requirements for the previous operating month.

(d) To determine the compliance ratio in Equation 2 of this section, you must select the appropriate oilseed solvent loss factor from Table 1 of this section. First, determine whether your source is new or existing using Table 1 of § 63.2833. Then, under the appropriate existing or new source column, select the oilseed solvent loss factor that corresponds to each type oilseed or process operation for each operating month.

(e) *Low-HAP solvent option.* For all vegetable oil production processes subject to this subpart, you must exclusively use solvent where the volume fraction of each HAP comprises 1 percent or less by volume of the solvent (low-HAP solvent) in each delivery, and you must meet the requirements in paragraphs (e)(1) through (5) of this section. Your vegetable oil production process is not subject to the requirements in §§ 63.2850 through 63.2870 unless specifically referenced in paragraphs (e)(1) through (5) of this section.

(1) You shall determine the HAP content of your solvent in accordance with the specifications in § 63.2854(b)(1).

(2) You shall maintain documentation of the HAP content determination for each delivery of the solvent at the facility at all times.

(3) You must submit an initial notification for existing sources in accordance with § 63.2860(a).

(4) You must submit an initial notification for new and reconstructed sources in accordance with § 63.2860(b).

(5) You must submit an annual compliance certification in accordance with § 63.2861(a). The certification should only include the information required under § 63.2861(a)(1) and (2), and a certification indicating whether the source complied with all of the requirements in paragraph (e) of this section.

(f) You may change compliance options for your source if you submit a notice to the Administrator at least 60 days prior to changing compliance options. If your source changes from the low-HAP solvent option to the compliance ratio determination option, you must determine the compliance ratio for the most recent 12 operating months beginning with the first month after changing compliance options.

(g) On or after September 15, 2020, you must operate and maintain any affected source, including associated air pollution control equipment and monitoring equipment, at all times in a manner consistent with safety and good air pollution control practices for minimizing emissions. The general duty to minimize emissions does not require you to make any further efforts to reduce emissions if levels required by the applicable standard have been achieved. Determination of whether a source is operating in compliance with operation and maintenance requirements will be based on information available to the Administrator which may include, but is not limited to, monitoring results, review of operation and maintenance procedures, review of operation and maintenance records, and inspection of the source.

(h) On and after September 15, 2020, you must meet the requirements in paragraphs (h)(1) through (3) of this section if you choose to operate your source under an initial startup period subject to § 63.2850(c)(2) or (d)(2).

(1) You must operate the mineral oil absorption system at all times during the initial startup period unless doing so is not possible due to safety considerations;

(2) You must operate the solvent condensers at all times during the initial startup period unless doing so is not

sfrattini on LAPJZKW1R2 with $$_JOB
VerDate Sep<11>2014 09:16 Apr 04, 2023 Jkt 256165 PO 00000 Frm 00522 Fmt 8010 Sfmt 8010 Q:\40\256165.XXX PC31

possible due to safety considerations; and

(3) You must follow site-specific operating limits, established according to the requirements in paragraphs (h)(3)(i) and (ii) of this section, for temperature and pressure for the desolventizing and oil distillation units associated with solvent recovery at all times, unless doing so is not possible due to safety considerations.

(i) Your site-specific operating limits may be based on equipment design, manufacturer's recommendations, or other site-specific operating values established for normal operating periods.

(ii) The operating limits may be in the form of a minimum, maximum, or operating range.

[66 FR 19011, Apr. 12, 2001, as amended at 69 FR 53341, Sept. 1, 2004; 85 FR 15626, Mar. 18, 2020]

COMPLIANCE REQUIREMENTS

§ 63.2850 How do I comply with the hazardous air pollutant emission standards?

(a) *General requirements*. The requirements in paragraphs (a)(1)(i) through (iv) of this section apply to all affected sources:

(1) Submit the necessary notifications in accordance with § 63.2860, which include:

(i) Initial notifications for existing sources.

(ii) Initial notifications for new and reconstructed sources.

(iii) Initial notifications for significant modifications to existing or new sources.

(iv) Notification of compliance status.

(2) Develop and implement a plan for demonstrating compliance in accordance with § 63.2851.

(3) Develop a written startup, shutdown and malfunction (SSM) plan in accordance with the provisions in § 63.2852. On and after September 15, 2020, an SSM plan is not required.

(4) Maintain all the necessary records you have used to demonstrate compliance with this subpart in accordance with § 63.2862.

(5) Submit the reports in paragraphs (a)(5)(i) through (iv) of this section, as applicable:

(i) Annual compliance certifications in accordance with § 63.2861(a).

(ii) Periodic SSM reports in accordance with § 63.2861(c).

(iii) Immediate SSM reports in accordance with § 63.2861(d).

(iv) Initial startup period reports in accordance with § 63.2861(e).

(6) Submit all notifications and reports and maintain all records required by the General Provisions for performance testing if you add a control device that destroys solvent.

(b) *Existing sources under normal operation*. You must meet all of the requirements listed in paragraph (a) of this section and Table 1 of this section for sources under normal operation, and the schedules for demonstrating compliance for existing sources under normal operation in Table 2 of this section.

(c) *New sources*. Your new source, including a source that is categorized as new due to reconstruction, must meet the requirements associated with one of two compliance options. Within 15 days of the startup date, you must choose to comply with one of the options listed in paragraph (c)(1) or (2) of this section:

(1) *Normal operation*. Upon initial startup of your new source, you must meet all of the requirements listed in § 63.2850(a) and Table 1 of this section for sources under normal operation, and the schedules for demonstrating compliance for new sources under normal operation in Table 2 of this section.

(2) *Initial startup period*. For up to 6 calendar months after the startup date of your new source, you must meet all of the requirements listed in paragraph (a) of this section and Table 1 of this section for sources operating under an initial startup period, and the schedules for demonstrating compliance for new sources operating under an initial startup period in Table 2 of this section. On and after September 15, 2020, you must also comply with the work practice standard in § 63.2840(h) for the duration of the initial startup period. At the end of the initial startup period (as defined in § 63.2872), your new source must then meet all of the requirements listed in Table 1 of this section for sources under normal operation.

sfrattini on LAPJZKW1R2 with $$_JOB
VerDate Sep<11>2014 09:16 Apr 04, 2023 Jkt 256165 PO 00000 Frm 00523 Fmt 8010 Sfmt 8010 Q:\40\256165.XXX PC31

(d) *Existing or new sources that have been significantly modified.* Your existing or new source that has been significantly modified must meet the requirements associated with one of two compliance options. Within 15 days of the modified source startup date, you must choose to comply with one of the options listed in paragraph (d)(1) or (2) of this section:

(1) *Normal operation.* Upon initial startup of your significantly modified existing or new source, you must meet all of the requirements listed in paragraph (a) of this section and Table 1 of this section for sources under normal operation, and the schedules for demonstrating compliance for an existing or new source that has been significantly modified in Table 2 of this section.

(2) *Initial startup period.* For up to 3 calendar months after the startup date of your significantly modified existing or new source, you must meet all of the requirements listed in paragraph (a) of this section and Table 1 of this section for sources operating under an initial startup period, and the schedules for demonstrating compliance for a significantly modified existing or new source operating under an initial startup period in Table 2 of this section. On and after September 15, 2020, you must also comply with the work practice standard in § 63.2840(h) for the duration of the initial startup period. At the end of the initial startup period (as defined in § 63.2872), your new or existing source must meet all of the requirements listed in Table 1 of this section for sources under normal operation.

(e) *Existing or new sources experiencing a malfunction.* A *malfunction* is defined in § 63.2. In general, it means any sudden, infrequent, and not reasonably preventable failure of air pollution control equipment, process equipment, or a process to function in a normal or usual manner. If your existing or new source experiences an unscheduled shutdown as a result of a malfunction, continues to operate during a malfunction (including the period reasonably necessary to correct the malfunction), or starts up after a shutdown resulting from a malfunction, then you must meet the requirements associated with one of two compliance options. Routine or scheduled process startups and shutdowns resulting from, but not limited to, market demands, maintenance activities, and switching types of oilseed processed, are not startups or shutdowns resulting from a malfunction and, therefore, do not qualify for this provision. Within 15 days of the beginning date of the malfunction, you must choose to comply with one of the options listed in paragraphs (e)(1) and (2) of this section. The provisions of this paragraph (e) do not apply on and after September 15, 2020.

(1) *Normal operation.* Your source must meet all of the requirements listed in paragraph (a) of this section and one of the options listed in paragraphs (e)(1)(i) through (iii) of this section:

(i) Existing source normal operation requirements in paragraph (b) of this section.

(ii) New source normal operation requirements in paragraph (c)(1) of this section.

(iii) Normal operation requirements for sources that have been significantly modified in paragraph (d)(1) of this section.

(2) *Malfunction period.* Throughout the malfunction period, you must meet all of the requirements listed in paragraph (a) of this section and Table 1 of this section for sources operating during a malfunction period. At the end of the malfunction period, your source must then meet all of the requirements listed in Table 1 of this section for sources under normal operation. Table 1 of this section follows:

sfrattini on LAPJZKW1R2 with $$_JOB
VerDate Sep<11>2014 09:16 Apr 04, 2023 Jkt 256165 PO 00000 Frm 00524 Fmt 8010 Sfmt 8010 Q:\40\256165.XXX PC31

TABLE 1 OF § 63.2850—REQUIREMENTS FOR COMPLIANCE WITH HAP EMISSION STANDARDS

Are you required to . . .	For periods of normal operation? [a]	For initial startup periods subject to § 63.2850(c)(2) or (d)(2)?	Before September 15, 2020, for malfunction periods subject to § 63.2850(e)(2)? [a]
(a)(1) Operate and maintain your source in accordance with general duty provisions of § 63.6(e) before September 15, 2020?.	Yes. Additionally, the HAP emission limits will apply.	Yes, you are required to minimize emissions to the extent practicable throughout the initial startup period. Such measures should be described in the SSM plan.	Yes, you are required to minimize emissions to the extent practicable throughout the initial startup period. Such measures should be described in the SSM plan.
(a)(2) Operate and maintain your source in accordance with general duty provisions of § 63.6(e) on and after September 15, 2020?.	No, you must meet the requirements of § 63.2840(g). Additionally, the HAP emission limits will apply.	No, you must meet the requirements of § 63.2840(g).	
(b) Determine and record the extraction solvent loss in gallons from your source?.	Yes, as described in § 63.2853.	Yes, as described in § 63.2862(e) (before September 15, 2020) and § 63.2862(f) (on and after September 15, 2020).	Yes, as described in § 63.2862(e).
(c) Record the volume fraction of HAP present at greater than 1 percent by volume and gallons of extraction solvent in shipment received?.	Yes	Yes	Yes.
(d) Determine and record the tons of each oilseed type processed by your source?.	Yes, as described in § 63.2855.	No	No.
(e) Determine the weighted average volume fraction of HAP in extraction solvent received as described in § 63.2854 by the end of the following calendar month?.	Yes	No. Except for solvent received by a new or reconstructed source commencing operation under an initial startup period, the HAP volume fraction in any solvent received during an initial startup period is included in the weighted average HAP determination for the next operating month.	No, the HAP volume fraction in any solvent received during a malfunction period is included in the weighted average HAP determination for the next operating month.
(f) Determine and record the actual solvent loss, weighted average volume fraction HAP, oilseed processed and compliance ratio for each 12 operating month period as described in § 63.2840 by the end of the following calendar month?.	Yes	No, these requirements are not applicable because your source is not required to determine the compliance ratio with data recorded for an initial startup period.	No, these requirements are not applicable because your source is not required to determine the compliance ratio with data recorded for a malfunction period.
(g) Submit a Notification of Compliance Status or Annual Compliance Certification as appropriate?.	Yes, as described in §§ 63.2860(d) and 63.2861(a).	No. However, you may be required to submit an annual compliance certification for previous operating months, if the deadline for the annual compliance certification happens to occur during the initial startup period.	No. However, you may be required to submit an annual compliance certification for previous operating months, if the deadline for the annual compliance certification happens to occur during the malfunction period.
(h)(1) Submit a Deviation Notification Report by the end of the calendar month following the month in which you determined that the compliance ratio exceeds 1.00 as described in § 63.2861(b) before September 15, 2020?.	Yes	No, these requirements are not applicable because your source is not required to determine the compliance ratio with data recorded for an initial startup period.	No, these requirements are not applicable because your source is not required to determine the compliance ratio with data recorded for a malfunction period.
(h)(2) Submit a Deviation Notification Report as described in § 63.2861(b) on and after September 15, 2020?.	Yes	Yes	No.
(i) Submit a Periodic SSM Report as described in § 63.2861(c)?.	No, a SSM activity is not categorized as normal operation.	Yes, before September 15, 2020.	Yes.

sfrattini on LAPJZKW1R2 with $$_JOB
VerDate Sep<11>2014 09:16 Apr 04, 2023 Jkt 256165 PO 00000 Frm 00525 Fmt 8010 Sfmt 8010 Q:\40\256165.XXX PC31

TABLE 1 OF § 63.2850—REQUIREMENTS FOR COMPLIANCE WITH HAP EMISSION STANDARDS—Continued

Are you required to . . .	For periods of normal operation? [a]	For initial startup periods subject to § 63.2850(c)(2) or (d)(2)?	Before September 15, 2020, for malfunction periods subject to § 63.2850(e)(2)? [a]
(j) Submit an Immediate SSM Report as described in § 63.2861(d)?.	No, a SSM activity is not categorized as normal operation.	Yes, only before September 15, 2020 and if your source does not follow the SSM plan.	Yes, only if your source does not follow the SSM plan.
(k) Submit an Initial Startup Report as described in § 63.2861(e) on and after September 15, 2020?.	No	Yes	No.

[a] Beginning on September 15, 2020, you must meet the requirements of this table for normal operating periods or for initial startup periods subject to § 63.2850(c)(2) or (d)(2) at all times. The column ''For malfunction periods subject to § 63.2850(e)(2)?'' is not applicable beginning on September 15, 2020.

TABLE 2 OF § 63.2850—SCHEDULES FOR DEMONSTRATING COMPLIANCE UNDER VARIOUS SOURCE OPERATING MODES

If your source is . . .	and is operating under. . .	then your recordkeeping schedule. . .	You must determine your first compliance ratio by the end of the calendar month following. . .	Base your first compliance ratio on information recorded. . .
(a) Existing	Normal operation	Begins on the compliance date.	The first 12 operating months after the compliance date.	During the first 12 operating months after the compliance date.
(b) New	(1) Normal operation	Begins on the startup date of your new source.	The first 12 operating months after the startup date of the new source.	During the first 12 operating months after the startup date of the new source.
	(2) An initial startup period.	Begins on the startup date of your new source.	The first 12 operating months after termination of the initial startup period, which can last for up to 6 months.	During the first 12 operating months after the initial startup period, which can last for up to 6 months.
(c) Existing or new that has been significantly modified.	(1) Normal operation	Resumes on the startup date of the modified source.	The first operating month after the startup date of the modified source.	During the previous 11 operating months prior to the significant modification and the first operating month following the initial startup date of the source.
	(2) An initial startup period.	Resumes on the startup date of the modified source.	The first operating month after termination of the initial startup period, which can last up to 3 months.	During the 11 operating months before the significant modification and the first operating month after the initial startup period.

[66 FR 19011, Apr. 12, 2001, as amended at 71 FR 20463, Apr. 20, 2006; 85 FR 15627, Mar. 18, 2020]

§ 63.2851 What is a plan for demonstrating compliance?

(a) You must develop and implement a written plan for demonstrating compliance that provides the detailed procedures you will follow to monitor and record data necessary for demonstrating compliance with this subpart. Procedures followed for quantifying solvent loss from the source and amount of oilseed processed vary from source to source because of site-specific factors such as equipment design characteristics and operating conditions. Typical procedures include one or more accurate measurement methods such as weigh scales, volumetric displacement, and material mass balances. Because the industry does not have a uniform set of procedures, you

sfrattini on LAPJZKW1R2 with $$_JOB
VerDate Sep<11>2014 09:16 Apr 04, 2023 Jkt 256165 PO 00000 Frm 00526 Fmt 8010 Sfmt 8010 Q:\40\256165.XXX PC31

must develop and implement your own site-specific plan for demonstrating compliance before the compliance date for your source. You must also incorporate the plan for demonstrating compliance by reference in the source's title V permit and keep the plan on-site and readily available as long as the source is operational. If you make any changes to the plan for demonstrating compliance, then you must keep all previous versions of the plan and make them readily available for inspection for at least 5 years after each revision. The plan for demonstrating compliance must include the items in paragraphs (a)(1) through (8) of this section:

(1) The name and address of the owner or operator.

(2) The physical address of the vegetable oil production process.

(3) A detailed description of all methods of measurement your source will use to determine your solvent losses, HAP content of solvent, and the tons of each type of oilseed processed.

(4) When each measurement will be made.

(5) Examples of each calculation you will use to determine your compliance status. Include examples of how you will convert data measured with one parameter to other terms for use in compliance determination.

(6) Example logs of how data will be recorded.

(7) A plan to ensure that the data continue to meet compliance demonstration needs.

(8) On and after September 15, 2020, if you choose to operate your source under an initial start-up period subject to § 63.2850(c)(2) or (d)(2), the items in paragraphs (c)(8)(i) and (ii) of this section:

(i) Your site-specific operating limits, and their basis, for temperature and pressure for the desolventizing and oil distillation units associated with solvent recovery.

(ii) A detailed description of all methods of measurement your source will use to measure temperature and pressure, including the measurement frequency.

(b) The responsible agency of these NESHAP may require you to revise your plan for demonstrating compliance. The responsible agency may require reasonable revisions if the procedures lack detail, are inconsistent or do not accurately determine solvent loss, HAP content of the solvent, or the tons of oilseed processed.

[66 FR 19011, Apr. 12, 2001, as amended at 85 FR 15629, Mar. 18, 2020]

§ 63.2852 What is a startup, shutdown, and malfunction plan?

Before September 15, 2020, you must develop a written SSM plan in accordance with § 63.6(e)(3). You must complete the SSM plan before the compliance date for your source. You must also keep the SSM plan on-site and readily available as long as the source is operational. The SSM plan provides detailed procedures for operating and maintaining your source to minimize emissions during a qualifying SSM event for which the source chooses the § 63.2850(e)(2) malfunction period, or the § 63.2850(c)(2) or (d)(2) initial startup period. The SSM plan must specify a program of corrective action for malfunctioning process and air pollution control equipment and reflect the best practices now in use by the industry to minimize emissions. Some or all of the procedures may come from plans you developed for other purposes such as a Standard Operating Procedure manual or an Occupational Safety and Health Administration Process Safety Management plan. To qualify as a SSM plan, other such plans must meet all the applicable requirements of these NESHAP. The provisions of this section do not apply on and after September 15, 2020.

[85 FR 15629, Mar. 18, 2020]

§ 63.2853 How do I determine the actual solvent loss?

By the end of each calendar month following an operating month, you must determine the total solvent loss in gallons for the previous operating month. The total solvent loss for an operating month includes all solvent losses that occur during normal operating periods within the operating month. If you have determined solvent losses for 12 or more operating months, then you must also determine the 12 operating months rolling sum of actual solvent loss in gallons by summing the

sfrattini on LAPJZKW1R2 with $$_JOB
VerDate Sep<11>2014 09:16 Apr 04, 2023 Jkt 256165 PO 00000 Frm 00527 Fmt 8010 Sfmt 8010 Q:\40\256165.XXX PC31

monthly actual solvent loss for the previous 12 operating months. The 12 operating months rolling sum of solvent loss is the ''actual solvent loss,'' which is used to calculate your compliance ratio as described in § 63.2840.

(a) To determine the actual solvent loss from your source, follow the procedures in your plan for demonstrating compliance to determine the items in paragraphs (a)(1) through (7) of this section:

(1) *The dates that define each operating status period during a calendar month.* The dates that define each operating status period include the beginning date of each calendar month and the date of any change in the source operating status. If the source maintains the same operating status during an entire calendar month, these dates are the beginning and ending dates of the calendar month. If, prior to the effective date of this rule, your source determines the solvent loss on an *accounting month,* as defined in § 63.2872, rather than a calendar month basis, and you have 12 complete accounting months of approximately equal duration in a calendar year, you may substitute the accounting month time interval for the calendar month time interval. If you choose to use an accounting month rather than a calendar month, you must document this measurement frequency selection in your plan for demonstrating compliance, and you must remain on this schedule unless you request and receive written approval from the agency responsible for these NESHAP.

(2) *Source operating status.* You must categorize the operating status of your source for each recorded time interval in accordance with criteria in Table 1 or Table 2 of this section, as follows:

TABLE 1 OF § 63.2853(a)(2)—CATEGORIZING YOUR SOURCE OPERATING STATUS BEFORE SEPTEMBER 15, 2020

If during a recorded time interval . . .	then your source operating status is . . .
(i) Your source processes any amount of listed oilseed and source is not operating under an initial startup operating period or a malfunction period subject to § 63.2850(c)(2), (d)(2), or (e)(2).	A normal operating period.
(ii) Your source processes no agricultural product and your source is not operating under an initial startup period or malfunction period subject to § 63.2850(c)(2), (d)(2), or (e)(2).	A nonoperating period.
(iii) You choose to operate your source under an initial startup period subject to § 63.2850(c)(2) or (d)(2).	An initial startup period.
(iv) You choose to operate your source under a malfunction period subject to § 63.2850(e)(2).	A malfunction period.
(v) Your source processes agricultural products not defined as listed oilseed	An exempt period.

TABLE 2 OF § 63.2853(a)(2)—CATEGORIZING YOUR SOURCE OPERATING STATUS ON AND AFTER SEPTEMBER 15, 2020

If during a recorded time interval . . .	Then your source operating status is . . .
(vi) Your source processes any amount of listed oilseed and source is not operating under an initial startup operating period subject to § 63.2850(c)(2) or (d)(2).	A normal operating period.
(vii) Your source processes no agricultural product and your source is not operating under an initial startup period subject to § 63.2850(c)(2) or (d)(2).	A nonoperating period.
(viii) You choose to operate your source under an initial startup period subject to § 63.2850(c)(2) or (d)(2).	An initial startup period.
(ix) Your source processes agricultural products not defined as listed oilseed.	An exempt period.

(3) *Measuring the beginning and ending solvent inventory.* You are required to measure and record the solvent inventory on the beginning and ending dates of each normal operating period that occurs during an operating month. You must consistently follow the procedures described in your plan for demonstrating compliance, as specified in § 63.2851, to determine the extraction

sfrattini on LAPJZKW1R2 with $$_JOB
VerDate Sep<11>2014 09:16 Apr 04, 2023 Jkt 256165 PO 00000 Frm 00528 Fmt 8010 Sfmt 8010 Q:\40\256165.XXX PC31

solvent inventory, and maintain readily available records of the actual solvent loss inventory, as described in §63.2862(c)(1). In general, you must measure and record the solvent inventory only when the source is actively processing any type of agricultural product. When the source is not active, some or all of the solvent working capacity is transferred to solvent storage tanks which can artificially inflate the solvent inventory.

(4) *Gallons of extraction solvent received.* Record the total gallons of extraction solvent received in each shipment. For most processes, the gallons of solvent received represents purchases of delivered solvent added to the solvent storage inventory. However, if your process refines additional vegetable oil from off-site sources, recovers solvent from the off-site oil, and adds it to the on-site solvent inventory, then you must determine the quantity of recovered solvent and include it in the gallons of extraction solvent received.

(5) *Solvent inventory adjustments.* In some situations, solvent losses determined directly from the measured solvent inventory and quantity of solvent received is not an accurate estimate of the ''actual solvent loss'' for use in determining compliance ratios. In such cases, you may adjust the total solvent loss for each normal operating period as long as you provide a reasonable justification for the adjustment. Situations that may require adjustments of the total solvent loss include, but are not limited to, situations in paragraphs (a)(5)(i) and (ii) of this section:

(i) *Solvent destroyed in a control device.* You may use a control device to reduce solvent emissions to meet the emission standard. The use of a control device does not alter the emission limit for the source. If you use a control device that reduces solvent emissions through destruction of the solvent instead of recovery, then determine the gallons of solvent that enter the control device and are destroyed there during each normal operating period. All solvent destroyed in a control device during a normal operating period can be subtracted from the total solvent loss. Examples of destructive emission control devices include catalytic incinerators, boilers, or flares. Identify and describe, in your plan for demonstrating compliance, each type of reasonable and sound measurement method that you use to quantify the gallons of solvent entering and exiting the control device and to determine the destruction efficiency of the control device. You may use design evaluations to document the gallons of solvent destroyed or removed by the control device instead of performance testing under §63.7. The design evaluations must be based on the procedures and options described in §63.985(b)(1)(i)(A) through (C) or §63.11, as appropriate. All data, assumptions, and procedures used in such evaluations must be documented and available for inspection. If you use performance testing to determine solvent flow rate to the control device or destruction efficiency of the device, follow the procedures as outlined in §63.997(e)(1) and (2) and the requirements in paragraph (a)(5)(i)(A) of this section. Instead of periodic performance testing to demonstrate continued good operation of the control device, you may develop a monitoring plan, following the procedures outlined in §63.988(c) and using operational parametric measurement devices such as fan parameters, percent measurements of lower explosive limits, and combustion temperature.

(A) On or after September 15, 2020, you must conduct all performance tests under such conditions as the Administrator specifies to you based on representative performance of the affected source for the period being tested. Representative conditions exclude periods of startup and shutdown unless specified by the Administrator. You may not conduct performance tests during periods of malfunction. You must record the process information that is necessary to document operating conditions during the test and include in such record an explanation to support that such conditions represent normal operation. Upon request, you shall make available to the Administrator such records as may be necessary to determine the conditions of performance tests.

(B) [Reserved]

(ii) Changes in solvent working capacity. In records you keep on-site,

sfrattini on LAPJZKW1R2 with $$_JOB
VerDate Sep<11>2014 09:16 Apr 04, 2023 Jkt 256165 PO 00000 Frm 00529 Fmt 8010 Sfmt 8010 Q:\40\256165.XXX PC31

document any process modifications resulting in changes to the solvent working capacity in your vegetable oil production process. *Solvent working capacity* is defined in § 63.2872. In general, solvent working capacity is the volume of solvent normally retained in solvent recovery equipment such as the extractor, desolventizer-toaster, solvent storage, working tanks, mineral oil absorber, condensers, and oil/solvent distillation system. If the change occurs during a normal operating period, you must determine the difference in working solvent volume and make a one-time documented adjustment to the solvent inventory.

(b) Use Equation 1 of this section to determine the actual solvent loss occurring from your affected source for all normal operating periods recorded within a calendar month. Equation 1 of this section follows:

$$\text{Monthly Actual Solvent (gal)} = \sum_{i=1}^{n} \left(SOLV_B - SOLV_E + SOLV_R \pm SOLV_A\right)_i \qquad \text{(Eq. 1)}$$

Where:

$SOLV_B$ = Gallons of solvent in the inventory at the beginning of normal operating period ''i'' as determined in paragraph (a)(3) of this section.

$SOLV_E$ = Gallons of solvent in the inventory at the end of normal operating period ''i'' as determined in paragraph (a)(3) of this section.

$SOLV_R$ = Gallons of solvent received between the beginning and ending inventory dates of normal operating period ''i'' as determined in paragraph (a)(4) of this section.

$SOLV_A$ = Gallons of solvent added or removed from the extraction solvent inventory during normal operating period ''i'' as determined in paragraph (a)(5) of this section.

n = Number of normal operating periods in a calendar month.

(c) The actual solvent loss is the total solvent losses during normal operating periods for the previous 12 operating months. You determine your actual solvent loss by summing the monthly actual solvent losses for the previous 12 operating months. You must record the actual solvent loss by the end of each calendar month following an operating month. Use the actual solvent loss in Equation 2 of § 63.2840 to determine the compliance ratio. Actual solvent loss does not include losses that occur during operating status periods listed in paragraphs (c)(1) through (4) of this section. If any one of these four operating status periods span an entire month, then the month is treated as nonoperating and there is no compliance ratio determination.

(1) Nonoperating periods as described in paragraph (a)(2) of this section.

(2) Initial startup periods as described in § 63.2850(c)(2) or (d)(2).

(3) Before September 15, 2020, malfunction periods as described in § 63.2850(e)(2).

(4) Exempt operation periods as described in paragraph (a)(2) of this section.

[66 FR 19011, Apr. 12, 2001, as amended at 85 FR 15629, Mar. 18, 2020]

§ 63.2854 How do I determine the weighted average volume fraction of HAP in the actual solvent loss?

(a) This section describes the information and procedures you must use to determine the weighted average volume fraction of HAP in extraction solvent received for use in your vegetable oil production process. By the end of each calendar month following an operating month, determine the weighted average volume fraction of HAP in extraction solvent received since the end of the previous operating month. If you have determined the monthly weighted average volume fraction of HAP in solvent received for 12 or more operating months, then also determine an overall weighted average volume fraction of HAP in solvent received for the previous 12 operating months. Use the volume fraction of HAP determined as a 12 operating months weighted average in

sfrattini on LAPJZKW1R2 with $$_JOB
VerDate Sep<11>2014 09:16 Apr 04, 2023 Jkt 256165 PO 00000 Frm 00530 Fmt 8010 Sfmt 8010 Q:\40\256165.XXX PC31
ER12AP01.003</MATH>

Equation 2 of §63.2840 to determine the compliance ratio.

(b) To determine the volume fraction of HAP in the extraction solvent determined as a 12 operating months weighted average, you must comply with paragraphs (b)(1) through (3) of this section:

(1) Record the volume fraction of each HAP comprising more than 1 percent by volume of the solvent in each delivery of solvent, including solvent recovered from off-site oil. To determine the HAP content of the material in each delivery of solvent, the reference method is EPA Method 311 of appendix A of this part. You may use EPA Method 311, an approved alternative method, or any other reasonable means for determining the HAP content. Other reasonable means of determining HAP content include, but are not limited to, a material safety data sheet or a manufacturer's certificate of analysis. A certificate of analysis is a legal and binding document provided by a solvent manufacturer. The purpose of a certificate of analysis is to list the test methods and analytical results that determine chemical properties of the solvent and the volume percentage of all HAP components present in the solvent at quantities greater than 1 percent by volume. You are not required to test the materials that you use, but the Administrator may require a test using EPA Method 311 (or an approved alternative method) to confirm the reported HAP content. However, if the results of an analysis by EPA Method 311 are different from the HAP content determined by another means, the EPA Method 311 results will govern compliance determinations.

(2) Determine the weighted average volume fraction of HAP in the extraction solvent each operating month. The weighted average volume fraction of HAP for an operating month includes all solvent received since the end of the last operating month, regardless of the operating status at the time of the delivery. Determine the monthly weighted average volume fraction of HAP by summing the products of the HAP volume fraction of each delivery and the volume of each delivery and dividing the sum by the total volume of all deliveries as expressed in Equation 1 of this section. Record the result by the end of each calendar month following an operating month. Equation 1 of this section follows:

$$\text{Monthly Weighted Average HAP Content of Extraction Solvent (volume fraction)} = \frac{\sum_{i=1}^{n}\left(\text{Received}_i * \text{Content}_i\right)}{\text{Total Received}} \qquad \text{(Eq. 1)}$$

Where:

Received_i = Gallons of extraction solvent received in delivery ''i.''

Content_i = The volume fraction of HAP in extraction solvent delivery ''i.''

Total Received = Total gallons of extraction solvent received since the end of the previous operating month.

n = Number of extraction solvent deliveries since the end of the previous operating month.

(3) Determine the volume fraction of HAP in your extraction solvent as a 12 operating months weighted average. When your source has processed oilseed for 12 operating months, sum the products of the monthly weighted average HAP volume fraction and corresponding volume of solvent received, and divide the sum by the total volume of solvent received for the 12 operating months, as expressed by Equation 2 of this section. Record the result by the end of each calendar month following an operating month and use it in Equation 2 of §63.2840 to determine the compliance ratio. Equation 2 of this section follows:

sfrattini on LAPJZKW1R2 with $$_JOB
VerDate Sep<11>2014 09:16 Apr 04, 2023 Jkt 256165 PO 00000 Frm 00531 Fmt 8010 Sfmt 8010 Q:\40\256165.XXX PC31
ER12AP01.004</MATH>

$$\text{12-Month Weighted Average of HAP Content in Solvent Received (volume fraction)} = \frac{\sum_{i=1}^{12}\left(\text{Received}_i * \text{Content}_i\right)}{\text{Total Received}} \qquad \text{(Eq. 2)}$$

Where:

Received_i = Gallons of extraction solvent received in operating month ''i'' as determined in accordance with § 63.2853(a)(4).

Content_i = Average volume fraction of HAP in extraction solvent received in operating month ''i'' as determined in accordance with paragraph (b)(1) of this section.

Total Received = Total gallons of extraction solvent received during the previous 12 operating months.

§ 63.2855 How do I determine the quantity of oilseed processed?

All oilseed measurements must be determined on an *as received* basis, as defined in § 63.2872. The as received basis refers to the oilseed chemical and physical characteristics as initially received by the source and prior to any oilseed handling and processing. By the end of each calendar month following an operating month, you must determine the tons as received of each listed oilseed processed for the operating month. The total oilseed processed for an operating month includes the total of each oilseed processed during all normal operating periods that occur within the operating month. If you have determined the tons of oilseed processed for 12 or more operating months, then you must also determine the 12 operating months rolling sum of each type oilseed processed by summing the tons of each type of oilseed processed for the previous 12 operating months. The 12 operating months rolling sum of each type of oilseed processed is used to calculate the compliance ratio as described in § 63.2840.

(a) To determine the tons as received of each type of oilseed processed at your source, follow the procedures in your plan for demonstrating compliance to determine the items in paragraphs (a)(1) through (5) of this section:

(1) *The dates that define each operating status period.* The dates that define each operating status period include the beginning date of each calendar month and the date of any change in the source operating status. If, prior to the effective date of this rule, your source determines the oilseed inventory on an accounting month rather than a calendar month basis, and you have 12 complete accounting months of approximately equal duration in a calendar year, you may substitute the accounting month time interval for the calendar month time interval. If you choose to use an accounting month rather than a calendar month, you must document this measurement frequency selection in your plan for demonstrating compliance, and you must remain on this schedule unless you request and receive written approval from the agency responsible for these NESHAP. The dates on each oilseed inventory log must be consistent with the dates recorded for the solvent inventory.

(2) *Source operating status.* You must categorize the source operation for each recorded time interval. The source operating status for each time interval recorded on the oilseed inventory for each type of oilseed must be consistent with the operating status recorded on the solvent inventory logs as described in § 63.2853(a)(2).

(3) *Measuring the beginning and ending inventory for each oilseed.* You are required to measure and record the oilseed inventory on the beginning and ending dates of each normal operating period that occurs during an operating month. You must consistently follow the procedures described in your plan for demonstrating compliance, as specified in § 63.2851, to determine the oilseed inventory on an as received basis and maintain readily available records of the oilseed inventory as described by § 63.2862(c)(3).

(4) *Tons of each oilseed received.* Record the type of oilseed and tons of each shipment of oilseed received and added to your on-site storage.

sfrattini on LAPJZKW1R2 with $$_JOB
VerDate Sep<11>2014 09:16 Apr 04, 2023 Jkt 256165 PO 00000 Frm 00532 Fmt 8010 Sfmt 8010 Q:\40\256165.XXX PC31
ER12AP01.005</MATH>

(5) *Oilseed inventory adjustments.* In some situations, determining the quantity of oilseed processed directly from the measured oilseed inventory and quantity of oilseed received is not an accurate estimate of the tons of oilseed processed for use in determining compliance ratios. For example, spoiled and molded oilseed removed from storage but not processed by your source will result in an overestimate of the quantity of oilseed processed. In such cases, you must adjust the oilseed inventory and provide a justification for the adjustment. Situations that may require oilseed inventory adjustments include, but are not limited to, the situations listed in paragraphs (a)(5)(i) through (v) of this section:

(i) Oilseed that molds or otherwise become unsuitable for processing.

(ii) Oilseed you sell before it enters the processing operation.

(iii) Oilseed destroyed by an event such as a process malfunction, fire, or natural disaster.

(iv) Oilseed processed through operations prior to solvent extraction such as screening, dehulling, cracking, drying, and conditioning; but that are not routed to the solvent extractor for further processing.

(v) Periodic physical measurements of inventory. For example, some sources periodically empty oilseed storage silos to physically measure the current oilseed inventory. This periodic measurement procedure typically results in a small inventory correction. The correction factor, usually less than 1 percent, may be used to make an adjustment to the source's oilseed inventory that was estimated previously with indirect measurement techniques. To make this adjustment, your plan for demonstrating compliance must provide for such an adjustment.

(b) Use Equation 1 of this section to determine the quantity of each oilseed type processed at your affected source during normal operating periods recorded within a calendar month. Equation 1 of this section follows:

$$\text{Monthly Quantity of Each Oilseed Processed (tons)} = \sum_{n=1}^{n}\left(SEED_B - SEED_E + SEED_R \pm SEED_A\right) \qquad \text{(Eq. 1)}$$

Where:

$SEED_B$ = Tons of oilseed in the inventory at the beginning of normal operating period ''i'' as determined in accordance with paragraph (a)(3) of this section.

$SEED_E$ = Tons of oilseed in the inventory at the end of normal operating period ''i'' as determined in accordance with paragraph (a)(3) of this section.

$SEED_R$ = Tons of oilseed received during normal operating period ''i'' as determined in accordance with paragraph (a)(4) of this section.

$SEED_A$ = Tons of oilseed added or removed from the oilseed inventory during normal operating period ''i'' as determined in accordance with paragraph (a)(5) of this section.

n = Number of normal operating periods in the calendar month during which this type oilseed was processed.

(c) The quantity of each oilseed processed is the total tons of each type of listed oilseed processed during normal operating periods in the previous 12 operating months. You determine the tons of each oilseed processed by summing the monthly quantity of each oilseed processed for the previous 12 operating months. You must record the 12 operating months quantity of each type of oilseed processed by the end of each calendar month following an operating month. Use the 12 operating months quantity of each type of oilseed processed to determine the compliance ratio as described in § 63.2840. The quantity of oilseed processed does not include oilseed processed during the operating status periods in paragraphs (c)(1) through (4) of this section:

(1) Nonoperating periods as described in § 63.2853 (a)(2)(ii).

(2) Initial startup periods as described in § 63.2850(c)(2) or (d)(2).

(3) Before September 15, 2020, malfunction periods as described in § 63.2850(e)(2).

(4) Exempt operation periods as described in § 63.2853 (a)(2)(v).

sfrattini on LAPJZKW1R2 with $$_JOB
VerDate Sep<11>2014 09:16 Apr 04, 2023 Jkt 256165 PO 00000 Frm 00533 Fmt 8010 Sfmt 8010 Q:\40\256165.XXX PC31
ER12AP01.000</MATH>

(5) If any one of these four operating status periods span an entire calendar month, then the calendar month is treated as a nonoperating month and there is no compliance ratio determination.

[66 FR 19011, Apr. 12, 2001, as amended at 85 FR 15630, Mar. 18, 2020]

NOTIFICATIONS, REPORTS, AND RECORDS

§ 63.2860 What notifications must I submit and when?

You must submit the one-time notifications listed in paragraphs (a) through (d) of this section to the responsible agency:

(a) *Initial notification for existing sources.* For an existing source, submit an initial notification to the agency responsible for these NESHAP no later than 120 days after the effective date of this subpart, or no later than 120 days after the source becomes subject to this subpart, whichever is later. In the notification, include the items in paragraphs (a)(1) through (5) of this section:

(1) The name and address of the owner or operator.

(2) The physical address of the vegetable oil production process.

(3) Identification of the relevant standard, such as the vegetable oil production NESHAP, and compliance date.

(4) A brief description of the source including the types of listed oilseeds processed, nominal operating capacity, and type of desolventizer(s) used.

(5) A statement designating the source as a major source of HAP or a demonstration that the source meets the definition of an area source. An area source is a source that is not a major source and is not collocated within a plant site with other sources that are individually or collectively a major source.

(b) *Initial notifications for new and reconstructed sources.* New or reconstructed sources must submit a series of notifications before, during, and after source construction per the schedule listed in § 63.9. The information requirements for the notifications are the same as those listed in the General Provisions with the exceptions listed in paragraphs (b)(1) and (2) of this section:

(1) The application for approval of construction does not require the specific HAP emission data required in § 63.5(d)(1)(ii)(H) and (iii), (d)(2) and (d)(3)(ii). The application for approval of construction would include, instead, a brief description of the source including the types of listed oilseeds processed, nominal operating capacity, and type of desolventizer(s) used.

(2) The notification of actual startup date must also include whether you have elected to operate under an initial startup period subject to § 63.2850(c)(2) and provide an estimate and justification for the anticipated duration of the initial startup period.

(c) *Significant modification notifications.* Any existing or new source that plans to undergo a significant modification as defined in § 63.2872 must submit two reports as described in paragraphs (c)(1) and (2) of this section:

(1) Initial notification. You must submit an initial notification to the agency responsible for these NESHAP 30 days prior to initial startup of the significantly modified source. The initial notification must demonstrate that the proposed changes qualify as a significant modification. The initial notification must include the items in paragraphs (c)(1)(i) and (ii) of this section:

(i) The expected startup date of the modified source.

(ii) A description of the significant modification including a list of the equipment that will be replaced or modified. If the significant modification involves changes other than adding or replacing extractors, desolventizer-toasters (conventional and specialty), and meal dryer-coolers, then you must also include the fixed capital cost of the new components, expressed as a percentage of the fixed capital cost to build a comparable new vegetable oil production process; supporting documentation for the cost estimate; and documentation that the proposed changes will significantly affect solvent losses.

(2) Notification of actual startup. You must submit a notification of actual startup date within 15 days after initial startup of the modified source. The notification must include the items in paragraphs (c)(2)(i) through (iv) of this section:

sfrattini on LAPJZKW1R2 with $$_JOB
VerDate Sep<11>2014 09:16 Apr 04, 2023 Jkt 256165 PO 00000 Frm 00534 Fmt 8010 Sfmt 8010 Q:\40\256165.XXX PC31

(i) The initial startup date of the modified source.

(ii) An indication whether you have elected to operate under an initial startup period subject to §63.2850(d)(2).

(iii) The anticipated duration of any initial startup period.

(iv) A justification for the anticipated duration of any initial startup period.

(d) *Notification of compliance status.* As an existing, new, or reconstructed source, you must submit a notification of compliance status report to the responsible agency no later than 60 days after determining your initial 12 operating months compliance ratio. If you are an existing source, you generally must submit this notification no later than 50 calendar months after the effective date of these NESHAP (36 calendar months for compliance, 12 operating months to record data, and 2 calendar months to complete the report). If you are a new or reconstructed source, the notification of compliance status is generally due no later than 20 calendar months after initial startup (6 calendar months for the initial startup period, 12 operating months to record data, and 2 calendar months to complete the report). The notification of compliance status must contain the items in paragraphs (d)(1) through (6) of this section:

(1) The name and address of the owner or operator.

(2) The physical address of the vegetable oil production process.

(3) Each listed oilseed type processed during the previous 12 operating months.

(4) Each HAP identified under §63.2854(a) as being present in concentrations greater than 1 percent by volume in each delivery of solvent received during the 12 operating months period used for the initial compliance determination.

(5) A statement designating the source as a major source of HAP or a demonstration that the source qualifies as an area source. An area source is a source that is not a major source and is not collocated within a plant site with other sources that are individually or collectively a major source.

(6) A compliance certification indicating whether the source complied with all of the requirements of this subpart throughout the 12 operating months used for the initial source compliance determination. This certification must include a certification of the items in paragraphs (d)(6)(i) through (iii) of this section:

(i) The plan for demonstrating compliance (as described in §63.2851) and SSM plan (as described in §63.2852) are complete and available on-site for inspection.

(ii) You are following the procedures described in the plan for demonstrating compliance.

(iii) The compliance ratio is less than or equal to 1.00.

[66 FR 19011, Apr. 12, 2001, as amended at 85 FR 73904, Nov. 19, 2020]

§63.2861 What reports must I submit and when?

After the initial notifications, you must submit the reports in paragraphs (a) through (d) of this section to the agency responsible for these NESHAP at the appropriate time intervals:

(a) *Annual compliance certifications.* The first annual compliance certification is due 12 calendar months after you submit the notification of compliance status. Each subsequent annual compliance certification is due 12 calendar months after the previous annual compliance certification. The annual compliance certification provides the compliance status for each operating month during the 12 calendar months period ending 60 days prior to the date on which the report is due. Include the information in paragraphs (a)(1) through (6) of this section in the annual certification:

(1) The name and address of the owner or operator.

(2) The physical address of the vegetable oil production process.

(3) Each listed oilseed type processed during the 12 calendar months period covered by the report.

(4) Each HAP identified under §63.2854(a) as being present in concentrations greater than 1 percent by volume in each delivery of solvent received during the 12 calendar months period covered by the report.

(5) A statement designating the source as a major source of HAP or a

sfrattini on LAPJZKW1R2 with $$_JOB
VerDate Sep<11>2014 09:16 Apr 04, 2023 Jkt 256165 PO 00000 Frm 00535 Fmt 8010 Sfmt 8010 Q:\40\256165.XXX PC31

demonstration that the source qualifies as an area source. An area source is a source that is not a major source and is not collocated within a plant site with other sources that are individually or collectively a major source.

(6) A compliance certification to indicate whether the source was in compliance for each compliance determination made during the 12 calendar months period covered by the report. For each such compliance determination, you must include a certification of the items in paragraphs (a)(6)(i) through (ii) of this section:

(i) You are following the procedures described in the plan for demonstrating compliance.

(ii) The compliance ratio is less than or equal to 1.00.

(b) *Deviation notification report.* Submit a deviation report for each compliance determination you make in which the compliance ratio exceeds 1.00 as determined under § 63.2840(c) or if you deviate from the work practice standard for an initial startup period subject to § 63.2850(c)(2) or (d)(2). Submit the deviation report by the end of the month following the calendar month in which you determined the deviation. The deviation notification report must include the items in paragraphs (b)(1) through (7) of this section if you exceed the compliance ratio, and must include the items in paragraphs (b)(1), (2), and (5) through (8) of this section if you deviate from the work practice standard:

(1) The name and address of the owner or operator.

(2) The physical address of the vegetable oil production process.

(3) Each listed oilseed type processed during the 12 operating months period for which you determined the deviation.

(4) The compliance ratio comprising the deviation. You may reduce the frequency of submittal of the deviation notification report if the agency responsible for these NESHAP does not object as provided in § 63.10(e)(3)(iii).

(5) Beginning on September 15, 2020, the number of deviations and for each deviation the date and duration of each deviation. Flag and provide an explanation for any deviation from the compliance ratio for which a deviation report is being submitted for more than one consecutive month (*i.e.*, include a reference to the original date and reporting of the deviation). If the explanation provides that corrective actions have returned the affected unit(s) to its normal operation, you are not required to include the items in paragraphs (b)(6) and (7) of this section.

(6) Beginning on September 15, 2020, a statement of the cause of each deviation (including unknown cause, if applicable).

(7) Beginning on September 15, 2020, for each deviation, a list of the affected sources or equipment, an estimate of the quantity of HAP emitted over the emission requirements of § 63.2840, and a description of the method used to estimate the emissions.

(8) A description of the deviation from the work practice standard during the initial startup period, including the records of § 63.2862(f) for the deviation.

(c) *Periodic startup, shutdown, and malfunction report.* Before September 15, 2020, if you choose to operate your source under an initial startup period subject to § 63.2850(c)(2) or (d)(2) or a malfunction period subject to § 63.2850(e)(2), you must submit a periodic SSM report by the end of the calendar month following each month in which the initial startup period or malfunction period occurred. The periodic SSM report must include the items in paragraphs (c)(1) through (3) of this section. The provisions of this paragraph (c) do not apply on and after September 15, 2020.

(1) The name, title, and signature of a source's responsible official who is certifying that the report accurately states that all actions taken during the initial startup or malfunction period were consistent with the SSM plan.

(2) A description of events occurring during the time period, the date and duration of the events, and reason the time interval qualifies as an initial startup period or malfunction period.

(3) An estimate of the solvent loss during the initial startup or malfunction period with supporting documentation.

(d) *Immediate SSM reports.* Before September 15, 2020, if you handle a SSM during an initial startup period subject

sfrattini on LAPJZKW1R2 with $$_JOB
VerDate Sep<11>2014 09:16 Apr 04, 2023 Jkt 256165 PO 00000 Frm 00536 Fmt 8010 Sfmt 8010 Q:\40\256165.XXX PC31

to §63.2850(c)(2) or (d)(2) or a malfunction period subject to §63.2850(e)(2) differently from procedures in the SSM plan and the relevant emission requirements in §63.2840 are exceeded, then you must submit an immediate SSM report. Immediate SSM reports consist of a telephone call or facsimile transmission to the responsible agency within 2 working days after starting actions inconsistent with the SSM plan, followed by a letter within 7 working days after the end of the event. The letter must include the items in paragraphs (d)(1) through (3) of this section. The provisions of this paragraph (d) do not apply on and after September 15, 2020.

(1) The name, title, and signature of a source's responsible official who is certifying the accuracy of the report, an explanation of the event, and the reasons for not following the SSM plan.

(2) A description and date of the SSM event, its duration, and reason it qualifies as a SSM.

(3) An estimate of the solvent loss for the duration of the SSM event with supporting documentation.

(e) *Initial startup period reports*. If you choose to operate your source under an initial startup period subject to §63.2850(c)(2) or (d)(2) on and after September 15, 2020, you must submit an initial startup period report within 30 days after the initial startup period ends. The report must include the items in paragraphs (e)(1) through (3) of this section.

(1) The name and address of the owner or operator.

(2) The physical address of the vegetable oil production process.

(3) A compliance certification indicating whether the source was in compliance with the work practice standard of §63.2840(h).

(f) *Performance tests*. On and after September 15, 2020, if you conduct performance tests to determine solvent flow rate to a control device or destruction efficiency of a control device according to the requirements of §63.2853(a)(5)(i), within 60 days after the date of completing each performance test, you must submit the results of the performance test following the procedures specified in paragraphs (f)(1) and (2) of this section.

(1) *Data collected using test methods supported by EPA's Electronic Reporting Tool (ERT) as listed on EPA's ERT website (https://www.epa.gov/electronic-reporting-air-emissions/electronic-reporting-tool-ert) at the time of the test*. Submit the results of the performance test to EPA via the Compliance and Emissions Data Reporting Interface (CEDRI), which can be accessed through EPA's Central Data Exchange (CDX) (*https://cdx.epa.gov/*). The data must be submitted in a file format generated through the use of EPA's ERT. Alternatively, you may submit an electronic file consistent with the extensible markup language (XML) schema listed on EPA's ERT website.

(2) *Data collected using test methods that are not supported by EPA's ERT as listed on EPA's ERT website at the time of the test*. The results of the performance test must be included as an attachment in the ERT or an alternate electronic file consistent with the XML schema listed on EPA's ERT website. Submit the ERT generated package or alternative file to EPA via CEDRI.

(3) *Confidential business information (CBI)*. If you claim some of the information submitted under paragraph (f) or (g) of this section is CBI, you must submit a complete file, including information claimed to be CBI, to EPA. The file must be generated through the use of EPA's ERT or an alternate electronic file consistent with the XML schema listed on EPA's ERT website. Submit the file on a compact disc, flash drive, or other commonly used electronic storage medium and clearly mark the medium as CBI. Mail the electronic medium to U.S. EPA/OAQPS/CORE CBI Office, Attention: Group Leader, Measurement Policy Group, MD C404–02, 4930 Old Page Rd., Durham, NC 27703. The same file with the CBI omitted must be submitted to EPA via EPA's CDX as described in paragraph (f)(1) of this section.

(g) *Submitting reports electronically*. On and after September 15, 2020, you must submit the initial notification required in §63.2860(b) and the annual compliance certification, deviation report, and initial startup report required in §63.2861(a), (b), and (e) to the EPA via CEDRI, which can be accessed through the EPA's CDX (*https://cdx.epa.gov*). The

sfrattini on LAPJZKW1R2 with $$_JOB
VerDate Sep<11>2014 09:16 Apr 04, 2023 Jkt 256165 PO 00000 Frm 00537 Fmt 8010 Sfmt 8010 Q:\40\256165.XXX PC31

owner or operator must upload to CEDRI an electronic copy of each applicable notification in portable document format (PDF). The applicable notification must be submitted by the deadline specified in this subpart, regardless of the method in which the reports are submitted. You must use the appropriate electronic report template on the CEDRI website (*https://www.epa.gov/electronic-reporting-air-emissions/compliance-and-emissions-data-reporting-interface-cedri*) for this subpart. The date report templates become available will be listed on the CEDRI website. The report must be submitted by the deadline specified in this subpart, regardless of the method in which the report is submitted. If you claim some of the information required to be submitted via CEDRI is CBI, submit a complete report, including information claimed to be CBI, to EPA. The report must be generated using the appropriate form on the CEDRI website. Submit the file on a compact disc, flash drive, or other commonly used electronic storage medium and clearly mark the medium as CBI. Mail the electronic medium to U.S. EPA/OAQPS/CORE CBI Office, Attention: Group Leader, Measurement Policy Group, MD C404–02, 4930 Old Page Rd., Durham, NC 27703. The same file with the CBI omitted must be submitted to EPA via EPA's CDX as described earlier in this paragraph.

(h) *Claims of EPA system outage*. If you are required to electronically submit a report through CEDRI in EPA's CDX, you may assert a claim of EPA system outage for failure to timely comply with the reporting requirement. To assert a claim of EPA system outage, you must meet the requirements outlined in paragraphs (h)(1) through (7) of this section.

(1) You must have been or will be precluded from accessing CEDRI and submitting a required report within the time prescribed due to an outage of either EPA's CEDRI or CDX systems.

(2) The outage must have occurred within the period of time beginning five business days prior to the date that the submission is due.

(3) The outage may be planned or unplanned.

(4) You must submit notification to the Administrator in writing as soon as possible following the date you first knew, or through due diligence should have known, that the event may cause or has caused a delay in reporting.

(5) You must provide to the Administrator a written description identifying:

(i) The date(s) and time(s) when CDX or CEDRI was accessed and the system was unavailable;

(ii) A rationale for attributing the delay in reporting beyond the regulatory deadline to EPA system outage;

(iii) Measures taken or to be taken to minimize the delay in reporting; and

(iv) The date by which you propose to report, or if you have already met the reporting requirement at the time of the notification, the date you reported.

(6) The decision to accept the claim of EPA system outage and allow an extension to the reporting deadline is solely within the discretion of the Administrator.

(7) In any circumstance, the report must be submitted electronically as soon as possible after the outage is resolved.

(i) *Claims of force majeure*. If you are required to electronically submit a report through CEDRI in EPA's CDX, you may assert a claim of force majeure for failure to timely comply with the reporting requirement. To assert a claim of force majeure, you must meet the requirements outlined in paragraphs (i)(1) through (5) of this section.

(1) You may submit a claim if a force majeure event is about to occur, occurs, or has occurred or there are lingering effects from such an event within the period of time beginning five business days prior to the date the submission is due. For the purposes of this section, a force majeure event is defined as an event that will be or has been caused by circumstances beyond the control of the affected facility, its contractors, or any entity controlled by the affected facility that prevents you from complying with the requirement to submit a report electronically within the time period prescribed. Examples of such events are acts of nature (*e.g.*, hurricanes, earthquakes, or floods), acts of war or terrorism, or

sfrattini on LAPJZKW1R2 with $$_JOB
VerDate Sep<11>2014 09:16 Apr 04, 2023 Jkt 256165 PO 00000 Frm 00538 Fmt 8010 Sfmt 8010 Q:\40\256165.XXX PC31

equipment failure or safety hazard beyond the control of the affected facility (*e.g.*, large scale power outage).

(2) You must submit notification to the Administrator in writing as soon as possible following the date you first knew, or through due diligence should have known, that the event may cause or has caused a delay in reporting.

(3) You must provide to the Administrator:

(i) A written description of the force majeure event;

(ii) A rationale for attributing the delay in reporting beyond the regulatory deadline to the force majeure event;

(iii) Measures taken or to be taken to minimize the delay in reporting; and

(iv) The date by which you propose to report, or if you have already met the reporting requirement at the time of the notification, the date you reported.

(4) The decision to accept the claim of force majeure and allow an extension to the reporting deadline is solely within the discretion of the Administrator.

(5) In any circumstance, the reporting must occur as soon as possible after the force majeure event occurs.

[66 FR 19011, Apr. 12, 2001, as amended at 67 FR 16321, Apr. 5, 2002; 85 FR 15630, Mar. 18, 2020]

§ 63.2862 What records must I keep?

(a) You must satisfy the recordkeeping requirements of this section by the compliance date for your source specified in Table 1 of § 63.2834.

(b) Before September 15, 2020, prepare a plan for demonstrating compliance (as described in § 63.2851) and a SSM plan (as described in § 63.2852). In these two plans, describe the procedures you will follow in obtaining and recording data, and determining compliance under normal operations or a SSM subject to the § 63.2850(c)(2) or (d)(2) initial startup period or the § 63.2850(e)(2) malfunction period. Complete both plans before the compliance date for your source and keep them on-site and readily available as long as the source is operational. On and after September 15, 2020, the requirement to prepare a SSM plan no longer applies, and the plan for demonstrating compliance must only describe the procedures you develop according to the requirements of § 63.2851.

(c) If your source processes any listed oilseed, record the items in paragraphs (c)(1) through (3) of this section:

(1) For the solvent inventory, record the information in paragraphs (c)(1)(i) through (vii) of this section in accordance with your plan for demonstrating compliance:

(i) Dates that define each operating status period during a calendar month.

(ii) The operating status of your source such as normal operation, nonoperating, initial startup period, malfunction period, or exempt operation for each recorded time interval.

(iii) Record the gallons of extraction solvent in the inventory on the beginning and ending dates of each normal operating period.

(iv) The gallons of all extraction solvent received, purchased, and recovered during each calendar month.

(v) All extraction solvent inventory adjustments, additions or subtractions. You must document the reason for the adjustment and justify the quantity of the adjustment.

(vi) The total solvent loss for each calendar month, regardless of the source operating status.

(vii) The actual solvent loss in gallons for each operating month.

(2) For the weighted average volume fraction of HAP in the extraction solvent, you must record the items in paragraphs (c)(2)(i) through (iii) of this section:

(i) The gallons of extraction solvent received in each delivery.

(ii) The volume fraction of each HAP exceeding 1 percent by volume in each delivery of extraction solvent.

(iii) The weighted average volume fraction of HAP in extraction solvent received since the end of the last operating month as determined in accordance with § 63.2854(b)(2).

(3) For each type of listed oilseed processed, record the items in paragraphs (c)(3)(i) through (vi) of this section, in accordance with your plan for demonstrating compliance:

(i) The dates that define each operating status period. These dates must be the same as the dates entered for the extraction solvent inventory.

sfrattini on LAPJZKW1R2 with $$_JOB
VerDate Sep<11>2014 09:16 Apr 04, 2023 Jkt 256165 PO 00000 Frm 00539 Fmt 8010 Sfmt 8010 Q:\40\256165.XXX PC31

(ii) The operating status of your source, as described in § 63.2853(a)(2). On the log for each type of listed oilseed that is not being processed during a normal operating period, you must record which type of listed oilseed is being processed in addition to the source operating status.

(iii) The oilseed inventory for the type of listed oilseed being processed on the beginning and ending dates of each normal operating period.

(iv) The tons of each type of listed oilseed received at the affected source each normal operating period.

(v) All listed oilseed inventory adjustments, additions or subtractions for normal operating periods. You must document the reason for the adjustment and justify the quantity of the adjustment.

(vi) The tons of each type of listed oilseed processed during each operating month.

(d) After your source has processed listed oilseed for 12 operating months, record the items in paragraphs (d)(1) through (5) of this section by the end of the calendar month following each operating month:

(1) The 12 operating months rolling sum of the actual solvent loss in gallons as described in § 63.2853(c).

(2) The weighted average volume fraction of HAP in extraction solvent received for the previous 12 operating months as described in § 63.2854(b)(3).

(3) The 12 operating months rolling sum of each type of listed oilseed processed at the affected source in tons as described in § 63.2855(c).

(4) A determination of the compliance ratio. Using the values from §§ 63.2853, 63.2854, 63.2855, and Table 1 of § 63.2840, calculate the compliance ratio using Equation 2 of § 63.2840.

(5) A statement of whether the source is in compliance with all of the requirements of this subpart. This includes a determination of whether you have met all of the applicable requirements in § 63.2850.

(e) Before September 15, 2020, for each SSM event subject to an initial startup period as described in § 63.2850(c)(2) or (d)(2), or a malfunction period as described in § 63.2850(e)(2), record the items in paragraphs (e)(1) through (3) of this section by the end of the calendar month following each month in which the initial startup period or malfunction period occurred. The provisions of this paragraph (e) do not apply on and after September 15, 2020.

(1) A description and date of the SSM event, its duration, and reason it qualifies as an initial startup or malfunction.

(2) An estimate of the solvent loss in gallons for the duration of the initial startup or malfunction period with supporting documentation.

(3) A checklist or other mechanism to indicate whether the SSM plan was followed during the initial startup or malfunction period.

(f) On and after September 15, 2020, for each initial startup period subject to § 63.2850(c)(2) or (d)(2), record the items in paragraphs (f)(1) through (6) of this section by the end of the calendar month following each month in which the initial startup period occurred.

(1) A description and dates of the initial startup period, and reason it qualifies as an initial startup.

(2) An estimate of the solvent loss in gallons for the duration of the initial startup or malfunction period with supporting documentation.

(3) Nominal design rate of the extractor and operating rate of the extractor for the duration of the initial startup period, or permitted production rate and actual production rate of your source for the duration of the initial startup period.

(4) Measured values for temperature and pressure for the desolventizing and oil distillation units associated with solvent recovery.

(5) Information to indicate the mineral oil absorption system was operating at all times during the initial startup period.

(6) Information to indicate the solvent condensers were operating at all times during the initial startup period.

(g) On and after September 15, 2020, keep the records of deviations specified in paragraphs (f)(1) through (4) of this section for each compliance determination you make in which the compliance ratio exceeds 1.00 as determined under § 63.2840(c) or if you deviate from the work practice standard for an initial startup period subject to § 63.2850(c)(2) or (d)(2).

sfrattini on LAPJZKW1R2 with $$_JOB
VerDate Sep<11>2014 09:16 Apr 04, 2023 Jkt 256165 PO 00000 Frm 00540 Fmt 8010 Sfmt 8010 Q:\40\256165.XXX PC31

(1) The number of deviations, and the date and duration of each deviation. For deviations from the compliance ratio, the date of the deviation is the date the compliance ratio determination is made. The duration of the deviation from the compliance ratio is the length of time taken to address the cause of the deviation, including the duration of any malfunction, and return the affected unit(s) to its normal or usual manner of operation. For deviations from the work practice standard during the initial startup period, the date of the deviation is the date(s) when the facility fails to comply with any of the work practice standard in § 63.2840(h). The duration of the deviation from the work practice standard is the length of time taken to return to the work practice standards.

(2) A statement of the cause of each deviation (including unknown cause, if applicable).

(3) For each deviation, a list of the affected sources or equipment, an estimate of the quantity of each regulated pollutant emitted over any emission limit, and a description of the method used to estimate the emissions.

(4) Actions taken to minimize emissions in accordance with § 63.2840(g), and any corrective actions taken to return the affected unit to its normal or usual manner of operation.

(5) If you deviate from the work practice standard for an initial startup period, a description of the deviation from the work practice standard.

(h) Any records required to be maintained by this part that are submitted electronically via EPA's CEDRI may be maintained in electronic format. This ability to maintain electronic copies does not affect the requirement for facilities to make records, data, and reports available upon request to a delegated air agency or EPA as part of an on-site compliance evaluation.

[66 FR 19011, Apr. 12, 2001, as amended at 85 FR 15632, Mar. 18, 2020]

§ 63.2863 In what form and how long must I keep my records?

(a) Your records must be in a form suitable and readily available for review in accordance with § 63.10(b)(1).

(b) As specified in § 63.10(b)(1), you must keep each record for 5 years following the date of each occurrence, measurement, maintenance, corrective action, report, or record.

(c) You must keep each record on-site for at least 2 years after the date of each occurrence, measurement, maintenance, corrective action, report, or record, in accordance with § 3.10(b)(1). You can keep the records off-site for the remaining 3 years.

OTHER REQUIREMENTS AND INFORMATION

§ 63.2870 What parts of the General Provisions apply to me?

Table 1 of this section shows which parts of the General Provisions in §§ 63.1 through 63.15 apply to you. Table 1 of § 63.2870 follows:

TABLE 1 TO § 63.2870—APPLICABILITY OF 40 CFR PART 63, SUBPART A, TO 40 CFR, PART 63, SUBPART GGGG

General provisions citation	Subject of citation	Brief description of requirement	Applies to subpart	Explanation
§ 63.1	Applicability	Initial applicability determination; applicability after standard established; permit requirements; extensions; notifications.	Yes.	
§ 63.2	Definitions	Definitions for part 63 standards.	Yes	Except as specifically provided in this subpart.
§ 63.3	Units and abbreviations	Units and abbreviations for part 63 standards.	Yes.	
§ 63.4	Prohibited activities and circumvention.	Prohibited activities; compliance date; circumvention; severability.	Yes.	

sfrattini on LAPJZKW1R2 with $$_JOB
VerDate Sep<11>2014 09:16 Apr 04, 2023 Jkt 256165 PO 00000 Frm 00541 Fmt 8010 Sfmt 8010 Q:\40\256165.XXX PC31

TABLE 1 TO § 63.2870—APPLICABILITY OF 40 CFR PART 63, SUBPART A, TO 40 CFR, PART 63, SUBPART GGGG—Continued

General provisions citation	Subject of citation	Brief description of requirement	Applies to subpart	Explanation
§ 63.5	Construction/reconstruction.	Applicability; applications; approvals.	Yes	Except for subsections of § 63.5 as listed below.
§ 63.5(c)	[Reserved].			
§ 63.5(d)(1)(ii)(H)	Application for approval	Type and quantity of HAP, operating parameters.	No	All sources emit HAP. Subpart GGGG does not require control from specific emission points.
§ 63.5(d)(1)(ii)(I)	[Reserved].			
§ 63.5(d)(1)(iii), (d)(2), (d)(3)(ii).		Application for approval	No	The requirements of the application for approval for new, reconstructed and significantly modified sources are described in § 63.2860(b) and (c) of subpart GGGG. General provision requirements for identification of HAP emission points or estimates of actual emissions are not required. Descriptions of control and methods, and the estimated and actual control efficiency of such do not apply. Requirements for describing control equipment and the estimated and actual control efficiency of such equipment apply only to control equipment to which the subpart GGGG requirements for quantifying.
§ 63.6	Applicability of General Provisions.	Applicability	Yes	Except for subsections of § 63.6 as listed below.
§ 63.6(b)(1)–(3)	Compliance dates, new and reconstructed sources.		No	Section 63.2834 of subpart GGGG specifies the compliance dates for new and reconstructed sources.
§ 63.6(b)(6)	[Reserved].			
§ 63.6(c)(3)–(4)	[Reserved].			
§ 63.6(d)	[Reserved].			
§ 63.6(e)(1)(i)	Operation and Maintenance.		Yes, before September 15, 2020. No, on or after September 15, 2020.	See § 63.2840(g) for general duty requirement
§ 63.6(e)(1)(ii)	Operation and Maintenance.	Requirement to correct malfunctions as soon as practicable.	Yes, before September 15, 2020]. No, on or after September 15, 2020.	See § 63.2840(g) for general duty requirement.
§ 63.6(e)(3)(i) through (e)(3)(ii) and § 63.6(e)(3)(v) through (vii).	Operation and maintenance requirements.		Yes, before September 15, 2020.	Minimize emissions to the extent practicable. On or after September 15, 2020, see § 63.2840(g) for general duty requirement.
§ 63.6(e)(3)(iii)	Operation and maintenance requirements.		No	Minimize emissions to the extent practicable. On or after September 15, 2020, see § 63.2840(g) for general duty requirement.
§ 63.6(e)(3)(iv)	Operation and maintenance requirements.		No	Report SSM and in accordance with § 63.2861(c) and (d).
§ 63.6(e)(3)(viii)	Operation and maintenance requirements.		Yes, before September 15, 2020. No, on or after September 15, 2020.	Except, before September 15, 2020, report each revision to your SSM plan in accordance with § 63.2861(c) rather than § 63.10(d)(5) as required under § 63.6(e)(3)(viii).

sfrattini on LAPJZKW1R2 with $$_JOB
VerDate Sep<11>2014 09:16 Apr 04, 2023 Jkt 256165 PO 00000 Frm 00542 Fmt 8010 Sfmt 8010 Q:\40\256165.XXX PC31

TABLE 1 TO §63.2870—APPLICABILITY OF 40 CFR PART 63, SUBPART A, TO 40 CFR, PART 63, SUBPART GGGG—Continued

General provisions citation	Subject of citation	Brief description of requirement	Applies to subpart	Explanation
§63.6(e)(3)(ix)	Title V permit		Yes, before September 15, 2020. No, on or after September 15, 2020.	
§63.6(f)(1)	Compliance with non-opacity emission standards except during SSM.	Comply with emission standards at all times except during SSM.	Yes, before September 15, 2020. No, on or after September 15, 2020.	
§63.6(f)(2)–(3)	Methods for Determining Compliance.		Yes.	
§63.6(g)	Use of an Alternative Standard.		Yes.	
§63.6(h)	Opacity/Visible emission (VE) standards.		No	Subpart GGGG has no opacity or VE standards.
§63.6(i)	Compliance extension	Procedures and criteria for responsible agency to grant compliance extension.	Yes..	
§63.6(j)	Presidential compliance exemption.	President may exempt source category from requirement to comply with subpart.	Yes..	
§63.7(e)(1)	Performance testing requirements.	Representative conditions for performance test.	Yes, before September 15, 2020. No, on or after September 15, 2020.	See §63.2853(a)(5)(i)(A) for performance testing requirements.
§63.7(e)(2)–(4), (f), (g), and (h).	Performance testing requirements.	Schedule, conditions, notifications and procedures.	Yes	Subpart GGGG requires performance testing only if the source applies additional control that destroys solvent. Section 63.2850(a)(6) requires sources to follow the performance testing guidelines of the General Provisions if a control is added.
§63.8	Monitoring requirements.		No	Subpart GGGG does not require monitoring other than as specified therein.
§63.9	Notification requirements.	Applicability and state delegation.	Yes	Except for subsections of §63.9 as listed below.
§63.9(b)(2)	Notification requirements.	Initial notification requirements for existing sources.	No	Section 63.2860(a) of subpart GGGG specifies the requirements of the initial notification for existing sources.
§63.9(b)(3)–(5)	Notification requirements.	Notification requirement for certain new/reconstructed sources.	Yes	Except the information requirements differ as described in §63.2860(b) of subpart GGGG.
§63.9(e)	Notification of performance test.	Notify responsible agency 60 days ahead.	Yes	Applies only if performance testing is performed.
§63.9(f)	Notification of VE/opacity observations.	Notify responsible agency 30 days ahead.	No	Subpart GGGG has no opacity or VE standards.
§63.9(g)	Additional notifications when using a continuous monitoring system (CMS).	Notification of performance evaluation; Notification using COMS data; notification that exceeded criterion for relative accuracy.	No	Subpart GGGG has no CMS requirements.
§63.9(h)	Notification of compliance status.	Contents	No	Section 63.2860(d) of subpart GGGG specifies requirements for the notification of compliance status.

sfrattini on LAPJZKW1R2 with $$_JOB
VerDate Sep<11>2014 09:16 Apr 04, 2023 Jkt 256165 PO 00000 Frm 00543 Fmt 8010 Sfmt 8010 Q:\40\256165.XXX PC31

TABLE 1 TO § 63.2870—APPLICABILITY OF 40 CFR PART 63, SUBPART A, TO 40 CFR, PART 63, SUBPART GGGG—Continued

General provisions citation	Subject of citation	Brief description of requirement	Applies to subpart	Explanation
§ 63.9(j)	Notification requirements.	Change in previous information.	Yes.	
§ 63.9(k)	Notification requirements.	Electronic reporting procedures.	Yes	Only as specified in § 63.9(j).
§ 63.10	Recordkeeping/reporting.	Schedule for reporting, record storage.	Yes	Except for subsections of § 63.10 as listed below.
§ 63.10(b)(2)(i)	Recordkeeping	Record SSM event	Yes, before September 15, 2020. No, on or after September 15, 2020.	Before September 15, 2020, applicable to periods when sources must implement their SSM plan as specified in subpart GGGG. On or after September 15, 2020, meet the requirements of § 63.2862(f).
§ 63.10(b)(2)(ii)–(iii)	Recordkeeping	Malfunction of air pollution equipment.	No	Before September 15, 2020, applies only if air pollution control equipment has been added to the process and is necessary for the source to meet the emission limit. On or after September 15, 2020, meet the requirements of § 63.2862(g).
§ 63.10(b)(2)(iv)–(v)	Recordkeeping	SSM recordkeeping	Yes, before September 15, 2020. No, on or after September 15, 2020.	
§ 63.10(b)(2)(vi)	Recordkeeping	CMS recordkeeping	No	Subpart GGGG has no CMS requirements.
§ 63.10(b)(2)(viii)–(ix).	Recordkeeping	Conditions of performance test.	Yes	Applies only if performance tests are performed. Subpart GGGG does not have any CMS opacity or VE observation requirements.
§ 63.10(b)(2)(x)–(xii)	Recordkeeping	CMS, performance testing, and opacity and VE observations recordkeeping.	No	Subpart GGGG does not require CMS.
§ 63.10(c)	Recordkeeping	Additional CMS recordkeeping.	No	Subpart GGGG does not require CMS.
§ 63.10(d)(2)	Reporting	Reporting performance test results.	Yes	Applies only if performance testing is performed.
§ 63.10(d)(3)	Reporting	Reporting opacity or VE observations.	No	Subpart GGGG has no opacity or VE standards.
§ 63.10(d)(4)	Reporting	Progress reports	Yes	Applies only if a condition of compliance extension exists.
§ 63.10(d)(5)	Reporting	SSM reporting	No	Section 63.2861(c) and (d) specify SSM reporting requirements.
§ 63.10(e)	Reporting	Additional CMS reports	No	Subpart GGGG does not require CMS.
§ 63.11	Control device requirements.	Requirements for flares	Yes	Applies only if your source uses a flare to control solvent emissions. Subpart GGGG does not require flares.
§ 63.12	State authority and delegations.	State authority to enforce standards.	Yes.	
§ 63.13	State/regional addresses.	Addresses where reports, notifications, and requests are sent.	Yes.	
§ 63.14	Incorporation by reference.	Test methods incorporated by reference.	Yes.	
§ 63.15	Availability of information and confidentiality.	Public and confidential information.	Yes.	

[66 FR 19011, Apr. 12, 2001, as amended at 67 FR 16321, Apr. 5, 2002; 71 FR 20463, Apr. 20, 2006; 85 FR 15632, Mar. 18, 2020; 85 FR 73904, Nov. 19, 2020]

sfrattini on LAPJZKW1R2 with $$_JOB
VerDate Sep<11>2014 09:16 Apr 04, 2023 Jkt 256165 PO 00000 Frm 00544 Fmt 8010 Sfmt 8016 Q:\40\256165.XXX PC31

§ 63.2871 Who implements and enforces this subpart?

(a) This subpart can be implemented by us, the U.S. EPA, or a delegated authority such as your State, local, or tribal agency. If the U.S. EPA Administrator has delegated authority to your State, local, or tribal agency, then that agency, as well as the U.S. EPA, has the authority to implement and enforce this subpart. You should contact your U.S. EPA Regional Office to find out if this subpart is delegated to your State, local, or tribal agency.

(b) In delegating implementation and enforcement authority of this subpart to a State, local, or tribal agency under section 40 CFR part 63, subpart E, the authorities contained in paragraph (c) of this section are retained by the Administrator of the U.S. EPA and are not transferred to the State, local, or tribal agency.

(c) The authorities that will not be delegated to State, local, or tribal agencies are as follows:

(1) Approval of alternative non-opacity emissions standards under § 63.6(g).

(2) Approval of alternative opacity standards under § 63.6(h)(9).

(3) Approval of major alternatives to test methods under § 63.7(e)(2)(ii) and (f) and as defined in § 63.90.

(4) Approval of major alternatives to monitoring under § 63.8(f) and as defined in § 63.90.

(5) Approval of major alternatives to recordkeeping and reporting under § 63.10(f) and as defined in § 63.90.

§ 63.2872 What definitions apply to this subpart?

Terms used in this subpart are defined in the sources listed:

(a) The Clean Air Act, section 112(a).

(b) In 40 CFR 63.2, the NESHAP General Provisions.

(c) In this section as follows:

Accounting month means a time interval defined by a business firm during which corporate economic and financial factors are determined on a consistent and regular basis. An accounting month will consist of approximately 4 to 5 calendar weeks and each accounting month will be of approximate equal duration. An accounting month may not correspond exactly to a calendar month, but 12 accounting months will correspond exactly to a calendar year.

Actual solvent loss means the gallons of solvent lost from a source during 12 operating months as determined in accordance with § 63.2853.

Agricultural product means any commercially grown plant or plant product.

Allowable HAP loss means the gallons of HAP that would have been lost from a source if the source was operating at the solvent loss factor for each listed oilseed type. The allowable HAP loss in gallons is determined by multiplying the tons of each oilseed type processed during the previous 12 operating months, as determined in accordance with § 63.2855, by the corresponding oilseed solvent loss factor (gal/ton) listed in Table 1 of § 63.2840, and by the dimensionless constant 0.64, and summing the result for all oilseed types processed.

Area source means any source that does not meet the major source definition.

As received is the basis upon which all oilseed measurements must be determined and refers to the oilseed chemical and physical characteristics as initially received by the source and prior to any oilseed handling and processing.

Batch operation means any process that operates in a manner where the addition of raw material and withdrawal of product do not occur simultaneously. Typically, raw material is added to a process, operational steps occur, and a product is removed from the process. More raw material is then added to the process and the cycle repeats.

Calendar month means 1 month as specified in a calendar.

Compliance date means the date on which monthly compliance recordkeeping begins. For existing sources, recordkeeping typically begins 3 years after the effective date of the subpart. For new and reconstructed sources, recordkeeping typically begins upon initial startup, except as noted in § 63.2834.

Compliance ratio means a ratio of the actual HAP loss in gallons from the previous 12 operating months to an allowable HAP loss in gallons, which is

sfrattini on LAPJZKW1R2 with $$_JOB
VerDate Sep<11>2014 09:16 Apr 04, 2023 Jkt 256165 PO 00000 Frm 00545 Fmt 8010 Sfmt 8010 Q:\40\256165.XXX PC31

determined by using oilseed solvent loss factors in Table 1 of § 63.2840, the weighted average volume fraction of HAP in solvent received for the previous 12 operating months, and the tons of each type of listed oilseed processed in the previous 12 operating months. Months during which no listed oilseed is processed, or months during which the § 63.2850(c)(2) or (d)(2) initial startup period or, before September 15, 2020, the § 63.2850(e)(2) malfunction period applies, are excluded from this calculation. Equation 2 of § 63.2840 is used to calculate this value. If the value is less than or equal to 1.00, the source is in compliance. If the value is greater than 1.00, the source is deviating from compliance.

Continuous operation means any process that adds raw material and withdraws product simultaneously. Mass, temperature, concentration and other properties typically approach steady-state conditions.

Conventional desolventizer means a desolventizer toaster that operates with indirect and direct-contact steam to remove solvent from the extracted meal. Oilseeds processed in a conventional desolventizer produce crude vegetable oil and crude meal products, such as animal feed.

Corn germ dry milling means a source that processes corn germ that has been separated from the other corn components using a ''dry'' process of mechanical chafing and air sifting.

Corn germ wet milling means a source that processes corn germ that has been separated from other corn components using a ''wet'' process of centrifuging a slurry steeped in a dilute sulfurous acid solution.

Exempt period means a period of time during which a source processes agricultural products not defined as listed oilseed.

Extraction solvent means an organic chemical medium used to remove oil from an oilseed. Typically, the extraction solvent is a commercial grade of hexane isomers which have an approximate HAP content of 64 percent by volume.

Hazardous air pollutant (HAP) means any substance or mixture of substances listed as a hazardous air pollutant under section 112(b) of the Clean Air Act.

Initial startup date means the first calendar day that a new, reconstructed or significantly modified source processes any listed oilseed.

Initial startup period means a period of time from the initial startup date of a new, reconstructed, or significantly modified source, for which you choose to operate the source under an initial startup period subject to § 63.2850(c)(2) or (d)(2), until the date your source operates for 15 consecutive days at or above 90 percent of the nominal design rate of the extractor or at or above 90 percent of the permitted production rate for your source. The initial startup period following initial startup of a new or reconstructed source may not exceed 6 calendar months. The initial startup period following a significant modification may not exceed 3 calendar months. Solvent and oilseed inventory information recorded during the initial startup period is excluded from use in any compliance ratio determinations.

Large cottonseed plant means a vegetable oil production process that processes 120,000 tons or more of cottonseed and other listed oilseed during all normal operating periods in a 12 operating months period used to determine compliance.

Malfunction period means a period of time between the beginning and end of a process malfunction and the time reasonably necessary for a source to correct the malfunction for which you choose to operate the source under a malfunction period subject to § 63.2850(e)(2). This period may include the duration of an unscheduled process shutdown, continued operation during a malfunction, or the subsequent process startup after a shutdown resulting from a malfunction. During a malfunction period, a source complies with the standards by minimizing HAP emissions to the extent practicable. Therefore, solvent and oilseed inventory information recorded during a malfunction period is excluded from use in any compliance ratio determinations.

Mechanical extraction means removing vegetable oil from oilseeds using only mechanical devices such as presses or screws that physically force the

sfrattini on LAPJZKW1R2 with $$_JOB
VerDate Sep<11>2014 09:16 Apr 04, 2023 Jkt 256165 PO 00000 Frm 00546 Fmt 8010 Sfmt 8010 Q:\40\256165.XXX PC31

oil from the oilseed. Mechanical extraction techniques use no organic solvents to remove oil from an oilseed.

Nonoperating month means any entire calendar or accounting month in which a source processes no agricultural product.

Nonoperating period means any period of time in which a source processes no agricultural product. This operating status does not apply during any period in which the source operates under an initial startup period as described in § 63.2850(c)(2) or (d)(2), or a malfunction period, as described in § 63.2850(e)(2).

Normal operating period or *normal operation* means any period of time in which a source processes a listed oilseed that is not categorized as an initial startup period as described in § 63.2850(c)(2) or (d)(2), or, before September 15, 2020, a malfunction period as described in § 63.2850(e)(2). At the beginning and ending dates of a normal operating period, solvent and oilseed inventory information is recorded and included in the compliance ratio determination.

Oilseed or listed oilseed means the following agricultural products: corn germ, cottonseed, flax, peanut, rapeseed (for example, canola), safflower, soybean, and sunflower.

Oilseed solvent loss factor means a ratio expressed as gallons of solvent loss per ton of oilseed processed. The solvent loss factors are presented in Table 1 of § 63.2840 and are used to determine the allowable HAP loss.

Operating month means any calendar or accounting month in which a source processes any quantity of listed oilseed, excluding any entire calendar or accounting month in which the source operated under an initial startup period as described in § 63.2850(c)(2) or (d)(2), or, before September 15, 2020, a malfunction period as described in § 63.2850(e)(2). An operating month may include time intervals characterized by several types of operating status. However, an operating month must have at least one normal operating period.

Significant modification means the addition of new equipment or the modification of existing equipment that:

(1) Significantly affects solvent losses from your vegetable oil production process;

(2) The fixed capital cost of the new components represents a significant percentage of the fixed capital cost of building a comparable new vegetable oil production process;

(3) The fixed capital cost of the new equipment does not constitute reconstruction as defined in § 63.2; and

(4) Examples of significant modifications include replacement of or major changes to solvent recovery equipment such as extractors, desolventizer-toasters/dryer-coolers, flash desolventizers, and distillation equipment associated with the mineral oil system, and equipment affecting desolventizing efficiency and steady-state operation of your vegetable oil production process such as flaking mills, oilseed heating and conditioning equipment, and cracking mills.

Small cottonseed plant means a vegetable oil production process that processes less than 120,000 tons of cottonseed and other listed oilseed during all normal operating periods in a 12 operating months period used to determine compliance.

Solvent extraction means removing vegetable oil from listed oilseed using an organic solvent in a direct-contact system.

Solvent working capacity means the volume of extraction solvent normally retained in solvent recovery equipment. Examples include components such as the solvent extractor, desolventizer-toaster, solvent storage and working tanks, mineral oil absorption system, condensers, and oil/solvent distillation system.

Specialty desolventizer means a desolventizer that removes excess solvent from soybean meal using vacuum conditions, energy from superheated solvent vapors, or reduced operating conditions (e.g., temperature) as compared to the typical operation of a conventional desolventizer. Soybeans processed in a specialty desolventizer result in high-protein vegetable meal products for human and animal consumption, such as calf milk replacement products and meat extender products.

Vegetable oil production process means the equipment comprising a continuous process for producing crude vegetable

sfrattini on LAPJZKW1R2 with $$_JOB
VerDate Sep<11>2014 09:16 Apr 04, 2023 Jkt 256165 PO 00000 Frm 00547 Fmt 8010 Sfmt 8010 Q:\40\256165.XXX PC31

oil and meal products, including specialty soybean products, in which oil is removed from listed oilseeds through direct contact with an organic solvent. Process equipment typically includes the following components: oilseed preparation operations (including conditioning, drying, dehulling, and cracking), solvent extractors, desolventizer-toasters, meal dryers, meal coolers, meal conveyor systems, oil distillation units, solvent evaporators and condensers, solvent recovery system (also referred to as a mineral oil absorption system), vessels storing solvent-laden materials, and crude meal packaging and storage vessels. A vegetable oil production process does not include vegetable oil refining operations (including operations such as bleaching, hydrogenation, and deodorizing) and operations that engage in additional chemical treatment of crude soybean meals produced in specialty desolventizer units (including operations such as soybean isolate production).

[66 FR 19011, Apr. 12, 2001, as amended at 71 FR 20464, Apr. 20, 2006; 85 FR 15635, Mar. 18, 2020]

Subpart HHHH—National Emission Standards for Hazardous Air Pollutants for Wet-Formed Fiberglass Mat Production

SOURCE: 67 FR 17835, Apr. 11, 2002, unless otherwise noted.

WHAT THIS SUBPART COVERS

§ 63.2980 What is the purpose of this subpart?

This subpart establishes national emission standards for hazardous air pollutants (NESHAP) for emissions from facilities that produce wet-formed fiberglass mat. This subpart also establishes requirements to demonstrate initial and continuous compliance with the emission limitations.

§ 63.2981 Does this subpart apply to me?

You must comply with this subpart if you meet the criteria in paragraphs (a) and (b) of this section:

(a) You own or operate a drying and curing oven at a wet-formed fiberglass mat production facility.

(b) Your drying and curing oven or the facility at which your drying and curing oven is located is a major source of hazardous air pollutants (HAP). A major source is any stationary source or group of stationary sources located within a contiguous area and under common control that emits or can potentially emit, considering controls, in the aggregate, 9.07 megagrams (10 tons) or more per year of a single HAP or 22.68 megagrams (25 tons) or more per year of any combination of HAP.

§ 63.2982 What parts of my plant does this subpart cover?

(a) This subpart applies to each new, reconstructed, or existing affected source. The affected source (the portion of your plant covered by this subpart) is each wet-formed fiberglass mat drying and curing oven.

(b) An affected source is a new affected source if you commenced construction of the affected source after May 26, 2000, and you meet the applicability criteria in § 63.2981 at start-up.

(c) An affected source is reconstructed if you meet the criteria as defined in § 63.2.

(d) An affected source is existing if it is not new or reconstructed.

EMISSION LIMITATIONS

§ 63.2983 What emission limits must I meet?

(a) You must limit the formaldehyde emissions from each drying and curing oven by either:

(1) Limiting emissions of formaldehyde to 0.03 kilograms or less per megagram (0.05 pounds per ton) of fiberglass mat produced; or

(2) Reducing uncontrolled formaldehyde emissions by 96 percent or more.

(b) [Reserved]

§ 63.2984 What operating limits must I meet?

(a) You must maintain operating parameters within established limits or ranges specified in your operation, maintenance, and monitoring (OMM) plan described in § 63.2987. If there is a

sfrattini on LAPJZKW1R2 with $$_JOB
VerDate Sep<11>2014 09:16 Apr 04, 2023 Jkt 256165 PO 00000 Frm 00548 Fmt 8010 Sfmt 8010 Q:\40\256165.XXX PC31

deviation of any of the specified parameters from the limit or range specified in the OMM plan, you must address the deviation according to paragraph (b) of this section. You must comply with the operating limits specified in paragraphs (a)(1) through (4) of this section:

(1) You must operate the thermal oxidizer so that the average operating temperature in any 3-hour block period does not fall below the temperature established during your performance test and specified in your OMM plan, except during periods when using a non-HAP binder.

(2) You must not use a resin with a free-formaldehyde content greater than that of the resin used during your performance test and specified in your OMM plan.

(3) You must operate the wet-formed fiberglass mat production process so that the average urea formaldehyde resin solids application rate in any 3-hour block period does not exceed the average application rate achieved during your performance test and specified in your OMM plan.

(4) If you use an add-on control device other than a thermal oxidizer or wish to monitor an alternative parameter and comply with a different operating limit than the limit specified in paragraph (a)(1) of this section, you must obtain approval for the alternative monitoring under §63.8(f). You must include the approved alternative monitoring and operating limits in the OMM plan specified in §63.2987.

(b) When during a period of normal operation, you detect that an operating parameter deviates from the limit or range established in paragraph (a) of this section, you must initiate corrective actions within 1 hour according to the provisions of your OMM plan. The corrective actions must be completed in an expeditious manner as specified in the OMM plan.

(c) You must maintain and inspect control devices according to the procedures specified in the OMM plan.

(d) You must include the operating limits specified in paragraphs (a)(1) through (4) of this section and their allowable ranges or levels in your OMM plan. Your 40 CFR part 70 operating permit for the drying and curing oven must contain a requirement that you develop and operate according to an OMM plan at all times.

(e) If you use a thermal oxidizer or other control device to achieve the emission limits in §63.2983, you must capture and convey the formaldehyde emissions from each drying and curing oven according to the procedures in Chapters 3 and 5 of ''Industrial Ventilation: A Manual of Recommended Practice'' (23rd Edition) or the appropriate chapters of ''Industrial Ventilation: A Manual of Recommended Practice for Design'' (27th Edition) (both are incorporated by reference, see §63.14). In addition, you may use an alternate as approved by the Administrator.

[67 FR 17835, Apr. 11, 2002, as amended at 71 FR 20464, Apr. 20, 2006; 84 FR 6692, Feb. 28, 2019]

§63.2985 When do I have to comply with these standards?

(a) Existing drying and curing ovens must be in compliance with this subpart no later than April 11, 2005, except as otherwise specified in this section and §§63.2986, 63.2998, 63.3000, and 63.3004 and Table 2 to this subpart.

(b) Drying and curing ovens constructed or reconstructed after May 26, 2000 and before April 9, 2018 must be in compliance with this subpart at startup or by April 11, 2002, whichever is later, except as otherwise specified in this section and §§63.2986, 63.2998, 63.3000, and 63.3004 and Table 2 to this subpart.

(c) If your facility is an area source that increases its emissions or its potential to emit such that it becomes a major source of HAP, the following apply:

(1) Any portion of the existing facility that is a new affected source or a new reconstructed affected source must be in compliance upon startup.

(2) All other parts of the source must be in compliance with this subpart 1 year after becoming a major source or by April 11, 2005, whichever is later.

(d) Drying and curing ovens constructed or reconstructed after April 6, 2018 must be in compliance with this subpart at startup or by February 28, 2019 whichever is later.

[67 FR 17835, Apr. 11, 2002, as amended at 84 FR 6692, Feb. 28, 2019]

sfrattini on LAPJZKW1R2 with $$_JOB
VerDate Sep<11>2014 09:16 Apr 04, 2023 Jkt 256165 PO 00000 Frm 00549 Fmt 8010 Sfmt 8010 Q:\40\256165.XXX PC31

§ 63.2986 How do I comply with the standards?

(a) You must install, maintain, and operate a thermal oxidizer or other control device or implement a process modification that reduces formaldehyde emissions from each drying and curing oven to the emission limits specified in § 63.2983.

(b) You must comply with the operating limits specified in § 63.2984. The operating limits prescribe the requirements for demonstrating continuous compliance based on the OMM plan. You must begin complying with the operating limits on the date by which you must complete the initial performance test.

(c) You must conduct a performance test according to §§ 63.2991, 63.2992, and 63.2993 to demonstrate compliance for each drying and curing oven subject to the emission limits in § 63.2983, and to establish or modify the operating limits or ranges for process or control device parameters that will be monitored to demonstrate continuous compliance.

(d) You must install, calibrate, maintain, and operate devices that monitor the parameters specified in your OMM plan at the frequency specified in the plan. All continuous parameter monitoring systems must be installed and operating no later than the applicable compliance date specified in § 63.2985.

(e) You must prepare and follow a written OMM plan as specified in § 63.2987.

(f) You must comply with the monitoring, recordkeeping, notification, and reporting requirements of this subpart as required by §§ 63.2996 through 63.3000.

(g) You must comply with the requirements in paragraphs (g)(1) through (3) of this section.

(1) Before August 28, 2019, existing drying and curing ovens and drying and curing ovens constructed or reconstructed after May 26, 2000 and before April 7, 2018 must be in compliance with the emission limits in § 63.2983 and the operating limits in § 63.2984 at all times, except during periods of startup, shutdown, or malfunction. After August 27, 2019, affected sources must be in compliance with the emission limits in § 63.2983 and the operating limits in § 63.2984 at all times, including periods of startup, shutdown, or malfunction. Affected sources that commence construction or reconstruction after April 6, 2018, must comply with all requirements of the subpart, no later than February 28, 2019 or upon startup, whichever is later.

(2) Before August 28, 2019, existing drying and curing ovens and drying and curing ovens constructed or reconstructed after May 26, 2000 and before April 9, 2018 must always operate and maintain any affected source, including air pollution control equipment and monitoring equipment, according to the provisions in § 63.6(e)(1). After August 27, 2019, for such affected sources, and after February 28, 2019 for affected sources that commence construction or reconstruction after April 6, 2018, at all times, you must operate and maintain any affected source, including associated air pollution control equipment and monitoring equipment, in a manner consistent with safety and good air pollution control practices for minimizing emissions. The general duty to minimize emissions does not require you to make any further efforts to reduce emissions if you are in compliance with the emissions limits required by this subpart. The Administrator will base the determination of whether a source is operating in compliance with operation and maintenance requirements on information available to the Administrator which may include, but is not limited to, monitoring results, review of operation and maintenance procedures, review of operation and maintenance records, and inspection of the source.

(3) Before August 28, 2019, for each existing source and for each new or reconstructed source for which construction commenced after May 26, 2000 and before April 9, 2018, you must maintain your written startup, shutdown, and malfunction plan according to the provisions in § 63.6(e)(3). The startup, shutdown, and malfunction plan must address the startup, shutdown, and corrective actions taken for malfunctioning process and air pollution control equipment. A startup, shutdown, and malfunction plan is not required for such affected sources after August

sfrattini on LAPJZKW1R2 with $$_JOB
VerDate Sep<11>2014 09:16 Apr 04, 2023 Jkt 256165 PO 00000 Frm 00550 Fmt 8010 Sfmt 8010 Q:\40\256165.XXX PC31

27, 2019. No startup, shutdown, or malfunction plan is required for any affected source that commences construction or reconstruction after April 6, 2018.

[67 FR 17835, Apr. 11, 2002, as amended at 71 FR 20464, Apr. 20, 2006; 84 FR 6693, Feb. 28, 2019]

OPERATION, MAINTENANCE, AND MONITORING PLAN

§ 63.2987 What must my operation, maintenance, and monitoring (OMM) plan include?

(a) You must prescribe the monitoring that will be performed to ensure compliance with these emission limitations. Table 1 to this subpart lists the minimum monitoring requirements. Your plan must specify the items listed in paragraphs (a)(1) through (3) of this section:

(1) Each process and control device to be monitored, the type of monitoring device that will be used, and the operating parameters that will be monitored.

(2) A monitoring schedule that specifies the frequency that the parameter values will be determined and recorded.

(3) The operating limits or ranges for each parameter that represent continuous compliance with the emission limits in § 63.2983. Operating limits and ranges must be based on values of the monitored parameters recorded during performance tests.

(b) You must establish routine and long-term maintenance and inspection schedules for each control device. You must incorporate in the schedules the control device manufacturer's recommendations for maintenance and inspections or equivalent procedures. If you use a thermal oxidizer, the maintenance schedule must include procedures for annual or more frequent inspection of the thermal oxidizer to ensure that the structural and design integrity of the combustion chamber is maintained. At a minimum, you must meet the requirements of paragraphs (b)(1) through (10) of this section:

(1) Inspect all burners, pilot assemblies, and pilot sensing devices for proper operation. Clean pilot sensor if necessary.

(2) Ensure proper adjustment of combustion air and adjust if necessary.

(3) Inspect, when possible, all internal structures (such as baffles) to ensure structural integrity per the design specifications.

(4) Inspect dampers, fans, and blowers for proper operation.

(5) Inspect motors for proper operation.

(6) Inspect, when possible, combustion chamber refractory lining. Clean and repair or replace lining if necessary.

(7) Inspect the thermal oxidizer shell for proper sealing, corrosion, and hot spots.

(8) For the burn cycle that follows the inspection, document that the thermal oxidizer is operating properly and make any necessary adjustments.

(9) Generally observe whether the equipment is maintained in good operating condition.

(10) Complete all necessary repairs as soon as practicable.

(c) You must establish procedures for responding to operating parameter deviations. At a minimum, the procedures must include the information in paragraphs (c)(1) through (3) of this section.

(1) Procedures for determining the cause of the operating parameter deviation.

(2) Actions for correcting the deviation and returning the operating parameters to the allowable ranges or limits.

(3) Procedures for recording the date and time that the deviation began and ended, and the times corrective actions were initiated and completed.

(d) Your plan must specify the recordkeeping procedures to document compliance with the emissions and operating limits. Table 1 to this subpart establishes the minimum recordkeeping requirements.

[67 FR 17835, Apr. 11, 2002, as amended at 84 FR 6693, Feb. 28, 2019]

§ 63.2988 [Reserved]

§ 63.2989 How do I change my OMM plan?

Changes to the operating limits or ranges in your OMM plan require a new performance test.

sfrattini on LAPJZKW1R2 with $$_JOB
VerDate Sep<11>2014 09:16 Apr 04, 2023 Jkt 256165 PO 00000 Frm 00551 Fmt 8010 Sfmt 8010 Q:\40\256165.XXX PC31

(a) To revise the ranges or levels established for your operating limits in § 63.2984, you must meet the requirements in paragraphs (a)(1) and (2) of this section:

(1) Submit a notification of performance test to the Administrator as specified in § 63.7(b) to revise your operating ranges or limits.

(2) After completing the performance test to demonstrate that compliance with the emissions limits can be achieved at the revised levels of the operating limits, you must submit the performance test results and the revised operating limits as part of the notification of compliance status required under § 63.9(h).

(b) If you are revising the inspection and maintenance procedures in your plan that are specified in § 63.2987(b), you do not need to conduct a new performance test.

(c) If you plan to operate your process or control device under alternative operating conditions and do not wish to revise your OMM plan when you change operating conditions, you can perform a separate compliance test to establish operating limits for each condition. You can then include the operating limits for each condition in your OMM plan. After completing the performance tests, you must record the date and time when you change operations from one condition to another, the condition under which you are operating, and the operating limits that apply under that condition. If you can perform a single performance test that establishes the most stringent operating limits that cover all alternative operating conditions, then you do not need to comply with the provisions of this paragraph.

[67 FR 17835, Apr. 11, 2002, as amended at 84 FR 6693, Feb. 28, 2019]

§ 63.2990 Can I conduct short-term experimental production runs that cause parameters to deviate from operating limits?

With the approval of the Administrator, you may conduct short-term experimental production runs during which your operating parameters deviate from the operating limits. Experimental runs may include, but are not limited to, runs using resin with a higher free-formaldehyde content than specified in the OMM plan, or using experimental pollution prevention techniques. To conduct a short-term experimental production run, you must complete the requirements in paragraphs (a) and (b) of this section.

(a) Prepare an application to the Administrator for approval to conduct the experimental production runs. Your application must include the items listed in paragraphs (a)(1) through (6) of this section.

(1) The purpose of the experimental production run.

(2) Identification of the affected line.

(3) An explanation of how the operating parameters will deviate from the previously approved ranges and limits.

(4) The duration of the experimental production run.

(5) The date and time of the experimental production run.

(6) A description of any emission testing to be performed during the experimental production run.

(b) Submit the application to the Administrator for approval at least 30 days before you conduct the experimental production run.

(c) If you conduct such experimental production runs without first receiving approval from the Administrator, then you must conduct a performance test under those same experimental production run conditions to show that you were in compliance with the formaldehyde emission limits in § 63.2983.

TESTING AND INITIAL COMPLIANCE REQUIREMENTS

§ 63.2991 When must I conduct performance tests?

Except for drying and curing ovens subject to a federally enforceable permit that requires the exclusive use of non-HAP binders, you must conduct a performance test for each drying and curing oven subject to this subpart according to the provisions in paragraphs (a) through (c) of this section:

(a) *Initially*. You must conduct a performance test to demonstrate initial compliance and to establish operating parameter limits and ranges to be used to demonstrate continuous compliance with the emission standards no later than 180 days after the applicable compliance date specified in § 63.2985.

sfrattini on LAPJZKW1R2 with $$_JOB
VerDate Sep<11>2014 09:16 Apr 04, 2023 Jkt 256165 PO 00000 Frm 00552 Fmt 8010 Sfmt 8010 Q:\40\256165.XXX PC31

(b) *Every 5 years.* You must conduct a performance test every 5 years as part of renewing your 40 CFR part 70 operating permit.

(c) *To change your OMM plan.* You must conduct a performance test according to the requirements specified in § 63.2992 to change the limit or range for any operating limit specified in your OMM plan established during a previous compliance test.

[67 FR 17835, Apr. 11, 2002, as amended at 84 FR 6693, Feb. 28, 2019]

§ 63.2992 How do I conduct a performance test?

(a) You must verify the performance of monitoring equipment as specified in § 63.2994 before performing the test.

(b) You must conduct the performance test according to the requirements in § 63.7(a) through (d), (e)(2) through (4), and (f) through (h).

(c) You must conduct the performance test under the conditions specified in paragraphs (c)(1) and (2) of this section.

(1) The resin must have the highest specified free-formaldehyde content that will be used.

(2) You must operate at the maximum feasible urea-formaldehyde resin solids application rate (pounds urea-formaldehyde resin solids applied per hour) that will be used.

(d) During the performance test, you must monitor and record the operating parameters that you will use to demonstrate continuous compliance after the test. These parameters are listed in Table 1 to this subpart.

(e) You must conduct performance tests under conditions that are representative of the performance of the affected source. Representative conditions exclude periods of startup and shutdown. You may not conduct performance tests during periods of malfunction. You must record the process information that is necessary to document operating conditions during the test and record an explanation to support that such conditions represent normal operation. Upon request, you must make available to the Administrator such records as may be necessary to determine the conditions of performance tests.

(f) You must conduct three separate test runs for each performance test as specified in § 63.7(e)(3), and each test run must last at least 1 hour.

[67 FR 17835, Apr. 11, 2002, as amended at 84 FR 6693, Feb. 28, 2019]

§ 63.2993 What test methods must I use in conducting performance tests?

(a) Use EPA Method 1 (40 CFR part 60, appendix A–1) for selecting the sampling port location and the number of sampling ports.

(b) Use EPA Method 2 (40 CFR part 60, appendix A–1) for measuring the volumetric flow rate of the stack gas.

(c) Use EPA Method 3 or 3A (40 CFR part 60, appendix A–2) for measuring oxygen and carbon dioxide concentrations needed to correct formaldehyde concentration measurements to a standard basis.

(d) Use EPA Method 4 (40 CFR part 60, appendix A–3) for measuring the moisture content of the stack gas.

(e) Use EPA Method 316, 318, or 320 (40 CFR part 63, appendix A) for measuring the concentration of formaldehyde.

(f) Use the method contained in appendix A to this subpart or the resin purchase specification and the vendor specification sheet for each resin lot for determining the free-formaldehyde content in the urea-formaldehyde resin.

(g) Use the method in appendix B to this subpart for determining product loss-on-ignition.

[84 FR 6694, Feb. 28, 2019]

§ 63.2994 How do I verify the performance of monitoring equipment?

(a) Before conducting the performance test, you must take the steps listed in paragraphs (a)(1) through (3) of this section:

(1) Install and calibrate all process equipment, control devices, and monitoring equipment.

(2) Develop and implement a continuous parameter monitoring system (CPMS) quality control program that includes written procedures for CPMS according to § 63.8(d)(1) and (2). You must keep these written procedures on record for the life of the affected source or until the affected source is no longer subject to the provisions of this

sfrattini on LAPJZKW1R2 with $$_JOB
VerDate Sep<11>2014 09:16 Apr 04, 2023 Jkt 256165 PO 00000 Frm 00553 Fmt 8010 Sfmt 8010 Q:\40\256165.XXX PC31

subpart, to be made available for inspection, upon request, by the Administrator. If you revise the performance evaluation plan, you must keep previous (*i.e.*, superseded) versions of the performance evaluation plan on record to be made available for inspection, upon request, by the Administrator, for a period of 5 years after each revision to the plan. You should include the program of corrective action in the plan required under § 63.8(d)(2).

(3) Conduct a performance evaluation of the CPMS according to § 63.8(e) which specifies the general requirements and requirements for notifications, the site-specific performance evaluation plan, conduct of the performance evaluation, and reporting of performance evaluation results.

(b) If you use a thermal oxidizer, the temperature monitoring device must meet the performance and equipment specifications listed in paragraphs (b)(1) through (3) of this section:

(1) The temperature monitoring device must be installed either at the exit of the combustion zone of each thermal oxidizer, or at the location specified by the manufacturer. The temperature monitoring device must also be installed in a location before any heat recovery or heat exchange equipment, and it must remain in the same location for both the performance test and the continuous monitoring of temperature.

(2) The recorder response range must include zero and 1.5 times the average temperature required in § 63.2984(a)(1).

(3) The measurement method or reference method for calibration must be a National Institute of Standards and Technology calibrated reference thermocouple-potentiometer system or an alternate reference subject to the approval of the Administrator.

[67 FR 17835, Apr. 11, 2002, as amended at 84 FR 6694, Feb. 28, 2019]

§ 63.2995 What equations must I use to determine compliance?

(a) *Percent reduction for formaldehyde.* To determine compliance with the percent reduction formaldehyde emission standard, use equation 1 of this section as follows:

$$E_f = \frac{M_i - M_o}{M_i} \times 100 \qquad \text{(Eq. 1)}$$

Where:

E_f = Formaldehyde control efficiency, percent.

M_i = Mass flow rate of formaldehyde entering the control device, kilograms (pounds) per hour.

M_o = Mass flow rate of formaldehyde exiting the control device, kilograms (pounds) per hour.

(b) *Formaldehyde mass emissions rate.* To determine compliance with the kilogram per megagram (pound per ton) formaldehyde emission standard, use equation 2 of this section as follows:

$$E = \frac{M}{P} \qquad \text{(Eq. 2)}$$

Where:

E = Formaldehyde mass emissions rate, kilograms (pounds) of formaldehyde per megagram (ton) of fiberglass mat produced.

M = Formaldehyde mass emissions rate, kilograms (pounds) per hour.

P = The wet-formed fiberglass mat production rate during the emissions sampling period, including any material trimmed from the final product, megagrams (tons) per hour.

(c) *Urea-formaldehyde (UF) resin solids application rate.* To determine the UF resin solids application rate, use equation 3 of this section as follows:

$$\frac{\text{UF Solids}}{\text{Hour}} = \text{LOI} \times \text{UFL} \times \text{MW} \times \text{SQ} \qquad \text{(Eq. 3)}$$

Where:

UF solids/hour = UF resin solids application rate (pounds per hour).

LOI = loss on ignition (weight faction), or pound of organic binder per pound of mat.

sfrattini on LAPJZKW1R2 with $$_JOB
VerDate Sep<11>2014 09:16 Apr 04, 2023 Jkt 256165 PO 00000 Frm 00554 Fmt 8010 Sfmt 8010 Q:\40\256165.XXX PC31
Er11ap02.021</GPH> Er11ap02.022</GPH> Er11ap02.023</GPH>

UFL = UF-to-latex ratio in the binder (mass fraction of UF resin solids in total combined resin solids for UF and latex), or pound of UF solids per pound of total resin solids (UF and latex).

MW = weight of the final mat per square (pounds per roofing square).

SQ = roofing squares produced per hour.

MONITORING REQUIREMENTS

§ 63.2996 What must I monitor?

(a) You must monitor the parameters listed in Table 1 to this subpart and any other parameters specified in your OMM plan. You must monitor the parameters, at a minimum, at the corresponding frequencies listed in Table 1 to this subpart, except as specified in paragraph (b) of this section.

(b) During periods when using a non-HAP binder, you are not required to monitor the parameters in Table 1 to this subpart.

[84 FR 6694, Feb. 28, 2019]

§ 63.2997 What are the requirements for monitoring devices?

(a) If you control formaldehyde emissions using a thermal oxidizer, you must meet the requirements in paragraphs (a)(1) and (2) of this section:

(1) Install, calibrate, maintain, and operate a device to monitor and record continuously the thermal oxidizer temperature at the exit of the combustion zone before any substantial heat exchange occurs or at the location consistent with the manufacturer's recommendations.

(2) Continuously monitor the thermal oxidizer temperature and determine and record the average temperature in 15-minute and 3-hour block averages. You may determine the average temperature more frequently than every 15 minutes and every 3 hours, but not less frequently.

(b) If you use process modifications or a control device other than a thermal oxidizer to control formaldehyde emissions, you must install, calibrate, maintain, and operate devices to monitor the parameters established in your OMM plan at the frequency established in the plan.

[67 FR 17835, Apr. 11, 2002, as amended at 84 FR 6694, Feb. 28, 2019]

NOTIFICATIONS, REPORTS, AND RECORDS

§ 63.2998 What records must I maintain?

You must maintain records according to the procedures of § 63.10. You must maintain the records listed in paragraphs (a) through (i) of this section.

(a) All records required by § 63.10, where applicable. Table 2 of this subpart presents the applicable requirements of the general provisions.

(b) The OMM plan.

(c) During periods when the binder formulation being applied contains HAP, records of values of monitored parameters listed in Table 1 to this subpart to show continuous compliance with each operating limit specified in Table 1 to this subpart. If you do not monitor the parameters in Table 1 to this subpart during periods when using non-HAP binder, you must record the dates and times that production of mat using non-HAP binder began and ended.

(d) Records of maintenance and inspections performed on the control devices.

(e) Before August 28, 2019, for existing drying and curing ovens and drying and curing ovens constructed or reconstructed after May 26, 2000 and before April 7, 2018, if an operating parameter deviation occurs, you must record:

(1) The date, time, and duration of the operating parameter deviation;

(2) A brief description of the cause of the operating parameter deviation;

(3) The dates and times at which corrective actions were initiated and completed;

(4) A brief description of the corrective actions taken to return the parameter to the limit or to within the range specified in the OMM plan; and

(5) A record of whether the deviation occurred during a period of startup, shutdown, or malfunction.

(f) Before August 28, 2019, for existing drying and curing ovens and drying and curing ovens constructed or reconstructed after May 26, 2000 and before April 7, 2018, keep all records specified in § 63.6(e)(3)(iii) through (v) related to startup, shutdown, and malfunction. Records specified in § 63.6(e)(3)(iii) through (v) are not required to be kept after August 27, 2019 for existing or new drying and curing ovens.

sfrattini on LAPJZKW1R2 with $$_JOB
VerDate Sep<11>2014 09:16 Apr 04, 2023 Jkt 256165 PO 00000 Frm 00555 Fmt 8010 Sfmt 8010 Q:\40\256165.XXX PC31

(g) After February 28, 2019 for affected sources that commence construction or reconstruction after April 6, 2018, and after August 27, 2019 for all other affected sources, in the event that an affected source fails to meet an applicable standard, including deviations from an emission limit in § 63.2983 or an operating limit in § 63.2984, you must record the number of failures and, for each failure, you must:

(1) Record the date, time, and duration of the failure;

(2) Describe the cause of the failure;

(3) Record and retain a list of the affected sources or equipment, an estimate of the quantity of each regulated pollutant emitted over any emission limit, and a description of the method used to estimate the emissions; and

(4) Record actions taken to minimize emissions in accordance with § 63.2986(g)(2) and any corrective actions taken to return the affected unit to its normal or usual manner of operation and/or to return the operating parameter to the limit or to within the range specified in the OMM plan, and the dates and times at which corrective actions were initiated and completed.

(h) If you operate your process or control device under alternative operating condition and have established operating limits for each condition as specified in § 63.2989(c), then you must keep records of the date and time you changed operations from one condition to another, the condition under which you are operating, and the applicable operating limits for that condition.

(i) Records showing how the maximum residence time was derived.

[67 FR 17835, Apr. 11, 2002, as amended at 84 FR 6694, Feb. 28, 2019]

§ 63.2999 In what form and for how long must I maintain records?

(a) You must maintain each record required by this subpart for 5 years. You must maintain the most recent 2 years of records at the facility. The remaining 3 years of records may be retained offsite.

(b) Your records must be readily available and in a form so they can be easily inspected and reviewed. You can keep the records on paper or an alternative medium, such as microfilm, computer, computer disks, compact disk, digital versatile disk, flash drive, other commonly used electronic storage medium, magnetic tape, or on microfiche.

(c) You may maintain any records that you submitted electronically via the EPA's Compliance and Emissions Data Reporting Interface (CEDRI) in electronic format. This ability to maintain electronic copies does not affect the requirement for facilities to make records, data, and reports available upon request to a delegated air agency or the EPA as part of an onsite compliance evaluation.

[67 FR 17835, Apr. 11, 2002, as amended at 84 FR 6695, Feb. 28, 2019]

§ 63.3000 What notifications and reports must I submit?

(a) You must submit all notifications and reports required by the applicable general provisions and this section. Table 2 of this subpart presents the applicable requirements of the general provisions.

(b) *Notification of compliance status.* You must submit the notification of compliance status, including the performance test results, the operating limits or ranges as determined during the performance test, and other information specified in § 63.9(h), before the close of business on the 60th calendar day after you complete the performance test according to § 63.10(d)(2).

(c) *Semiannual compliance reports.* You must submit semiannual compliance reports according to the requirements of paragraphs (c)(1) through (6) of this section.

(1) *Dates for submitting reports.* Unless the Administrator has agreed to a different schedule for submitting reports under § 63.10(a), you must deliver or postmark each semiannual compliance report no later than 30 days following the end of each semiannual reporting period. The first semiannual reporting period begins on the compliance date for your affected source and ends on June 30 or December 31, whichever date immediately follows your compliance date. Each subsequent semiannual reporting period for which you must submit a semiannual compliance report begins on July 1 or January 1 and ends 6 calendar months later. Before March 1, 2019, as required by § 63.10(e)(3), you

sfrattini on LAPJZKW1R2 with $$_JOB
VerDate Sep<11>2014 09:16 Apr 04, 2023 Jkt 256165 PO 00000 Frm 00556 Fmt 8010 Sfmt 8010 Q:\40\256165.XXX PC31

must begin submitting quarterly compliance reports if you deviate from the emission limits in §63.2983 or the operating limits in §63.2984. After February 28, 2019, you are not required to submit quarterly compliance reports. If you deviate from the emission limits in §63.2983 or the operating limits in §63.2984 in the quarter prior to February 28, 2019, you must include this information in the report for the first full semiannual reporting period following February 28, 2019.

(2) *Inclusion with title V report.* For each affected source that is subject to permitting regulations pursuant to 40 CFR part 70 or 71, and for which the permitting authority has established dates for submitting semiannual reports pursuant to 40 CFR 70.6(a)(3)(iii)(A) or 71.6 (a)(3)(iii)(A), you may submit the first and subsequent compliance reports according to the dates the permitting authority has established instead of according to the dates in paragraph (c)(1) of this section.

(3) *Contents of reports.* The semiannual compliance report must contain the information in paragraphs (c)(3)(i) through (vi) of this section:

(i) Company name and address.

(ii) Statement by a responsible official with that official's name, title, and signature, certifying the truth, accuracy, and completeness of the content of the report.

(iii) Date of report and beginning and ending dates of the reporting period.

(iv) A summary of the total duration of continuous parameter monitoring system downtime during the semiannual reporting period and the total duration of continuous parameter monitoring system downtime as a percent of the total source operating time during that semiannual reporting period.

(v) The date of the latest continuous parameter monitoring system certification or audit.

(vi) A description of any changes in the wet-formed fiberglass mat manufacturing process, continuous parameter monitoring system, or add-on control device since the last semiannual reporting period.

(4) *No deviations.* If there were no instances where an affected source failed to meet an applicable standard, including no deviations from the emission limit in §63.2983 or the operating limits in §63.2984, the semiannual compliance report must include a statement to that effect. If there were no periods during which the continuous parameter monitoring systems were out-of-control as specified in §63.8(c)(7), the semiannual compliance report must include a statement to that effect.

(5) *Deviations.* Before August 28, 2019, for existing drying and curing ovens and drying and curing ovens constructed or reconstructed after May 26, 2000 and before April 7, 2018, if there was a deviation from the emission limit in §63.2983 or an operating limit in §63.2984, the semiannual compliance report must contain the information in paragraphs (c)(5)(i) through (ix) of this section:

(i) The date and time that each malfunction started and stopped.

(ii) The date and time that each continuous parameter monitoring system was inoperative, except for zero (low-level) and high-level checks.

(iii) The date, time, and duration that each continuous parameter monitoring system was out-of-control, including the information in §63.8(c)(8).

(iv) The date and time that each deviation started and stopped, and whether each deviation occurred during a period of startup, shutdown, or malfunction or during another period.

(v) The date and time that corrective actions were taken, a description of the cause of the deviation, and a description of the corrective actions taken.

(vi) A summary of the total duration of each deviation during the semiannual reporting period and the total duration as a percent of the total source operating time during that semiannual reporting period.

(vii) A breakdown of the total duration of the deviations during the semiannual reporting period into those that were due to startup, shutdown, control equipment problems, process problems, other known causes, and other unknown causes.

(viii) A brief description of the associated process units.

(ix) A brief description of the associated continuous parameter monitoring system.

sfrattini on LAPJZKW1R2 with $$_JOB
VerDate Sep<11>2014 09:16 Apr 04, 2023 Jkt 256165 PO 00000 Frm 00557 Fmt 8010 Sfmt 8010 Q:\40\256165.XXX PC31

(6) *Deviations*. For affected sources that commence construction or reconstruction after April 6, 2018, after February 28, 2019, and after August 27, 2019 for all other affected sources, if there was an instance where an affected source failed to meet an applicable standard, including a deviation from the emission limit in § 63.2983 or an operating limit in § 63.2984, the semiannual compliance report must record the number of failures and contain the information in paragraphs (c)(6)(i) through (ix) of this section:

(i) The date, time, and duration of each failure.

(ii) The date and time that each continuous parameter monitoring system was inoperative, except for zero (low-level) and high-level checks.

(iii) The date, time, and duration that each continuous parameter monitoring system was out-of-control, including the information in § 63.8(c)(8).

(iv) A list of the affected sources or equipment, an estimate of the quantity of each regulated pollutant emitted over any emission limit, and a description of the method used to estimate the emissions.

(v) The date and time that corrective actions were taken, a description of the cause of the failure (including unknown cause, if applicable), and a description of the corrective actions taken.

(vi) A summary of the total duration of each failure during the semiannual reporting period and the total duration as a percent of the total source operating time during that semiannual reporting period.

(vii) A breakdown of the total duration of the failures during the semiannual reporting period into those that were due to control equipment problems, process problems, other known causes, and other unknown causes.

(viii) A brief description of the associated process units.

(ix) A brief description of the associated continuous parameter monitoring system.

(d) *Startup, shutdown, malfunction reports*. Before August 28, 2019, for existing drying and curing ovens and drying and curing ovens constructed or reconstructed after May 26, 2000 and before April 7, 2018, if you have a startup, shutdown, or malfunction during the semiannual reporting period, you must submit the reports specified § 63.10(d)(5). No startup, shutdown, or malfunction plan is required for any affected source that commences construction or reconstruction after April 6, 2018.

(e) *Performance test results*. You must submit results of each performance test (as defined in § 63.2) required by this subpart no later than 60 days after completing the test as specified in § 63.10(d)(2). You must include the values measured during the performance test for the parameters listed in Table 1 of this subpart and the operating limits or ranges that you will include in your OMM plan. For the thermal oxidizer temperature, you must include 15-minute averages and the average for the three 1-hour test runs. For affected sources that commence construction or reconstruction after April 6, 2018, beginning February 28, 2019, and beginning no later than August 27, 2019 for all other affected sources, you must submit the results following the procedures specified in paragraphs (e)(1) through (3) of this section.

(1) For data collected using test methods supported by the EPA's Electronic Reporting Tool (ERT) as listed on the EPA's ERT website (*https://www.epa.gov/electronic-reporting-air-emissions/electronic-reporting-tool-ert*) at the time of the test, you must submit the results of the performance test to the EPA via CEDRI (CEDRI can be accessed through the EPA's Central Data Exchange (CDX) (*https://cdx.epa.gov/*)). You must submit performance test data in a file format generated through the use of the EPA's ERT or an alternate electronic file format consistent with the extensible markup language (XML) schema listed on the EPA's ERT website.

(2) For data collected using test methods that are not supported by the EPA's ERT as listed on the EPA's ERT website at the time of the test, you must submit the results of the performance test to the Administrator at the appropriate address listed in § 63.13, unless the Administrator agrees to or specifies an alternate reporting method.

sfrattini on LAPJZKW1R2 with $$_JOB
VerDate Sep<11>2014 09:16 Apr 04, 2023 Jkt 256165 PO 00000 Frm 00558 Fmt 8010 Sfmt 8010 Q:\40\256165.XXX PC31

(3) If you claim that some of the performance test information you are submitting under paragraph (e)(1) is confidential business information (CBI), you must submit a complete file generated through the use of the EPA's ERT or an alternate electronic file consistent with the XML schema listed on the EPA's ERT website, including information claimed to be CBI, on a compact disk, flash drive or other commonly used electronic storage medium to the EPA. You must clearly mark the electronic medium as CBI and mail to U.S. EPA/OAQPS/CORE CBI Office, Attention: Group Leader, Measurement Policy Group, Mail Drop C404–02, 4930 Old Page Rd., Durham, NC 27703. You must submit the same ERT or alternate file with the CBI omitted to the EPA via the EPA's CDX as described in paragraph (e)(1) of this section.

(f) *Claims of EPA system outage*. If you are required to electronically submit a report through the CEDRI in the EPA's CDX, you may assert a claim of EPA outage for failure to timely comply with the reporting requirement. To assert a claim of EPA system outage, you must meet the requirements outlined in paragraphs (f)(1) through (7) of this section.

(1) You must have been or will be precluded from accessing CEDRI and submitting a required test report within the time prescribed due to an outage of either the EPA's CEDRI or CDX Systems.

(2) The outage must have occurred within the period of time beginning five business days prior to the date that the submission is due.

(3) The outage may be planned or unplanned.

(4) You must submit notification to the Administrator in writing as soon as possible following the date you first knew, or through due diligence should have known, that the event may cause or has caused a delay in reporting.

(5) You must provide to the Administrator a written description identifying:

(i) The date(s) and time(s) when CDX or CEDRI was accessed and the system was unavailable;

(ii) A rationale for attributing the delay in reporting beyond the regulatory deadline to EPA system outage;

(iii) Measures taken or to be taken to minimize the delay in reporting; and

(iv) The date by which you propose to report, or if you have already met the reporting requirement at the time of the notification, the date you reported.

(6) The decision to accept the claim of EPA system outage and allow an extension to the reporting deadline is solely within the discretion of the Administrator.

(7) In any circumstance, the report must be submitted electronically as soon as possible after the outage is resolved.

(g) *Claims of force majeure*. If you are required to electronically submit a report through CEDRI in the EPA's CDX, you may assert a claim of force majeure for failure to timely comply with the reporting requirement. To assert a claim of force majeure, you must meet the requirements outlined in paragraphs (g)(1) through (5) of this section.

(1) You may submit a claim if a force majeure event is about to occur, occurs, or has occurred or there are lingering effects from such an event within the period of time beginning five business days prior to the date the submission is due. For the purposes of this section, a force majeure event is defined as an event that will be or has been caused by circumstances beyond the control of the affected facility, its contractors, or any entity controlled by the affected facility that prevents you from complying with the requirements to submit a report electronically within the time period prescribed. Examples of such events are acts of nature (e.g., hurricanes, earthquakes, or floods), acts of war or terrorism, or equipment failure or safety hazard beyond the control of the affected facility (e.g., large scale power outage).

(2) You must submit notification to the Administrator in writing as soon as possible following the date you first knew, or through due diligence should have known, that the event may cause or has caused a delay in reporting.

(3) You must provide to the Administrator:

(i) A written description of the force majeure event;

sfrattini on LAPJZKW1R2 with $$_JOB
VerDate Sep<11>2014 09:16 Apr 04, 2023 Jkt 256165 PO 00000 Frm 00559 Fmt 8010 Sfmt 8010 Q:\40\256165.XXX PC31

(ii) A rationale for attributing the delay in reporting beyond the regulatory deadline to the force majeure event;

(iii) Measures taken or to be taken to minimize the delay in reporting; and

(iv) The date by which you propose to report, or if you have already met the reporting requirement at the time of the notification, the date you reported.

(4) The decision to accept the claim of force majeure and allow an extension to the reporting deadline is solely within the discretion of the Administrator.

(5) In any circumstance, the reporting must occur as soon as possible after the force majeure event occurs.

[67 FR 17835, Apr. 11, 2002, as amended at 84 FR 6695, Feb. 28, 2019]

OTHER REQUIREMENTS AND INFORMATION

§ 63.3001 What sections of the general provisions apply to me?

You must comply with the requirements of the general provisions of 40 CFR part 63, subpart A, as specified in Table 2 of this subpart.

[84 FR 6696, Feb. 28, 2019]

§ 63.3002 Who implements and enforces this subpart?

(a) This subpart can be implemented and enforced by the U.S. EPA or a delegated authority, such as your State, local, or tribal agency. If the Administrator has delegated authority to your State, local, or tribal agency, then that agency is the primary enforcement authority. If the Administrator has not delegated authority to your State, only EPA enforces this subpart. You should contact your U.S. EPA Regional Office to find out if implementation and enforcement of this subpart is delegated to your State, local, or tribal agency.

(b) In delegating implementation and enforcement authority of this subpart to a State, local, or tribal agency under section 40 CFR part 63, subpart E, the authorities contained in paragraphs (b)(1) through (4) of this section are retained by the Administrator of U.S. EPA and are not transferred to the State, local, or tribal agency.

(1) The authority under § 63.6(g) to approve alternatives to the emission limits in § 63.2983 and operating limits in § 63.2984 is not delegated.

(2) The authority under § 63.7(e)(2)(ii) and (f) to approve of major alternatives (as defined in § 63.90) to the test methods in § 63.2993 is not delegated.

(3) The authority under § 63.8(f) to approve major alternatives (as defined in § 63.90) to the monitoring requirements in §§ 63.2996 and 63.2997 is not delegated.

(4) The authority under § 63.10(f) to approve major alternatives (as defined in § 63.90) to recordkeeping, notification, and reporting requirements in §§ 63.2998 through 63.3000 is not delegated.

§ 63.3003 [Reserved]

§ 63.3004 What definitions apply to this subpart?

Terms used in this subpart are defined the Clean Air Act, in § 63.2, and in this section as follows:

Administrator means the Administrator of the United States Environmental Protection Agency or his or her authorized representative (e.g., a State that has been delegated the authority to implement the provisions of this part).

Deviation means:

(1) Before August 28, 2019, any instance in which an affected source subject to this subpart, or an owner or operator of such a source:

(i) Fails to meet any requirement or obligation established by this subpart, including, but not limited to, any emission limit, operating limit, or work practice standard;

(ii) Fails to meet any term or condition that is adopted to implement an applicable requirement in this subpart and that is included in the operating permit for any affected source required to obtain such a permit; or

(iii) Fails to meet any emission limit, or operating limit, or work practice standard in this subpart during startup, shutdown, or malfunction, regardless of whether or not such failure is permitted by this subpart.

(2) After February 28, 2019 for affected sources that commence construction or reconstruction after April 6, 2018, and after August 27, 2019 for all other affected sources, any instance in which an affected source subject to this

sfrattini on LAPJZKW1R2 with $$_JOB
VerDate Sep<11>2014 09:16 Apr 04, 2023 Jkt 256165 PO 00000 Frm 00560 Fmt 8010 Sfmt 8010 Q:\40\256165.XXX PC31

subpart, or an owner or operator of such a source:

(i) Fails to meet any requirement or obligation established by this subpart, including, but not limited to, any emission limit, operating limit, or work practice standard; or

(ii) Fails to meet any term or condition that is adopted to implement an applicable requirement in this subpart and that is included in the operating permit for any affected source required to obtain such a permit.

Drying and curing oven means the process section that evaporates excess moisture from a fiberglass mat and cures the resin that binds the fibers.

Emission limitation means an emission limit, operating limit, or work practice standard.

Fiberglass mat production rate means the weight of finished fiberglass mat produced per hour of production including any trim removed after the binder is applied and before final packaging.

Loss-on-ignition means the percentage decrease in weight of fiberglass mat measured before and after it has been ignited to burn off the applied binder. The loss-on-ignition is used to monitor the weight percent of binder in fiberglass mat.

Maximum residence time means the longest time, during normal operation and excluding periods of ramping up to speed during startup, that a particular point on the fiberglass mat remains in the drying and curing oven. It is determined for each line by the equation:

$$T = L/S$$

Where:

T is the residence time, in seconds;

L is the length of the drying and curing oven, in feet; and

S is the slowest line speed normally operated on the line, excluding periods of ramping up to speed during startup, in feet per second.

Non-HAP binder means a binder formulation that does not contain any substance that is required to be listed in Section 3 of a safety data sheet (SDS) pursuant to 29 CFR 1910.1200(g) and that is a HAP as defined in section 112(b) of the Clean Air Act. In designating a non-HAP binder under this subpart, you may not rely on the SDS for a binder where the manufacturer has withheld the specific chemical identity, including the chemical name, other specific identification of a hazardous chemical, or the exact percentage (concentration) of the substance in a mixture from Section 3 of the SDS. You may not withhold this information when making the case that the binder is a non-HAP binder for the purposes of § 63.2996.

Nonwoven wet-formed fiberglass mat manufacturing means the production of a fiberglass mat by bonding glass fibers to each other using a resin solution. Nonwoven wet-formed fiberglass mat manufacturing is also referred to as wet-formed fiberglass mat manufacturing.

Roofing square means the amount of finished product needed to cover an area 10 feet by 10 feet (100 square feet) of finished roof.

Shutdown after February 28, 2019 for affected sources that commence construction or reconstruction after April 6, 2018, and after August 27, 2019 for all other affected sources, means the cessation of operation of the drying and curing of any binder-infused fiberglass mat for any purpose. Shutdown ends when the maximum residence time has elapsed after binder-infused fiberglass mat ceases to enter the drying and curing oven.

Startup after February 28, 2019 for affected sources that commence construction or reconstruction after April 6, 2018, and after August 27, 2019 for all other affected sources, means the setting in operation of the drying and curing of binder-infused fiberglass mat for any purpose. Startup begins when binder-infused fiberglass mat enters the oven to be dried and cured for the first time or after a shutdown event.

Thermal oxidizer means an air pollution control device that uses controlled flame combustion inside a combustion chamber to convert combustible materials to noncombustible gases.

Urea-formaldehyde content in binder formulation means the mass-based percent of urea-formaldehyde resin in the total binder mix as it is applied to the glass fibers to form the mat.

[67 FR 17835, Apr. 11, 2002, as amended at 84 FR 6696, Feb. 28, 2019]

§§ 63.3005–63.3079 [Reserved]

sfrattini on LAPJZKW1R2 with $$_JOB
VerDate Sep<11>2014 09:16 Apr 04, 2023 Jkt 256165 PO 00000 Frm 00561 Fmt 8010 Sfmt 8010 Q:\40\256165.XXX PC31

TABLE 1 TO SUBPART HHHH OF PART 63—MINIMUM REQUIREMENTS FOR MONITORING AND RECORDKEEPING

As stated in §63.2998(c), you must comply with the minimum requirements for monitoring and recordkeeping in the following table:

You must monitor these parameters:	At this frequency:	And record for the monitored parameter:
1. Thermal oxidizer temperature [1] [4]	Continuously	15-minute and 3-hour block averages.
2. Other process or control device parameters specified in your OMM plan [2] [4].	As specified in your OMM plan	As specified in your OMM plan.
3. Urea-formaldehyde resin solids application rate [4].	On each operating day, calculate the average lb/h application rate for each product manufactured during that day.	The average lb/h value for each product manufactured during the day.
4. Resin free-formaldehyde content [4]	For each lot of resin purchased	The value for each lot used during the operating day.
5. Loss-on-ignition [3] [4]	Measured at least once per day, for each product manufactured during that day.	The value for each product manufactured during the operating day.
6. UF-to-latex ratio in the binder [3] [4]	For each batch of binder prepared the operating day.	The value for each batch of binder prepared during the operating day.
7. Weight of the final mat product per square (lb/roofing square) [3] [4].	Each product manufactured during the operating day.	The value for each product manufactured during the operating day.
8. Average nonwoven wet-formed fiberglass mat production rate (roofing square/h) [3] [4].	For each product manufactured during the operating day.	The average value for each product manufactured during operating day.

[1] Required if a thermal oxidizer is used to control formaldehyde emissions.
[2] Required if process modifications or a control device other than a thermal oxidizer is used to control formaldehyde emissions.
[3] These parameters must be monitored and values recorded, but no operating limits apply.
[4] You are not required to monitor or record these parameters during periods when using a non-HAP binder. If you do not monitor these parameters during periods when using a non-HAP binder, you must record the dates and times that production of mat using the non-HAP binder began and ended.

[84 FR 6697, Feb. 28, 2019]

TABLE 2 TO SUBPART HHHH OF PART 63—APPLICABILITY OF GENERAL PROVISIONS (40 CFR PART 63, SUBPART A) TO SUBPART HHHH

As stated in §63.3001, you must comply with the applicable General Provisions requirements according to the following table:

Citation	Requirement	Applies to subpart HHHH	Explanation
§63.1(a)(1)–(4)	General Applicability	Yes.	
§63.1(a)(5)		No	[Reserved].
§63.1(a)(6)–(8)		Yes.	
§63.1(a)(9)		No	[Reserved].
§63.1(a)(10)–(14)		Yes.	
§63.1(b)	Initial Applicability Determination.	Yes.	
§63.1(c)(1)	Applicability After Standard Established.	Yes.	
§63.1(c)(2)		Yes	Some plants may be area sources.
§63.1(c)(3)		No	[Reserved].
§63.1(c)(4)–(5)		Yes.	
§63.1(c)(6)	Reclassification	Yes.	
§63.1(d)		No	[Reserved].
§63.1(e)	Applicability of Permit Program	Yes.	
§63.2	Definitions	Yes	Additional definitions in §63.3004.
§63.3	Units and Abbreviations	Yes.	
§63.4(a)(1)–(3)	Prohibited Activities	Yes.	
§63.4(a)(4)		No	[Reserved].
§63.4(a)(5)		Yes.	
§63.4(b)–(c)	Circumvention/Severability	Yes.	
§63.5(a)	Construction/Reconstruction	Yes.	
§63.5(b)(1)	Existing/Constructed/Reconstruction.	Yes.	
§63.5(b)(2)		No	[Reserved].
§63.5(b)(3)–(6)		Yes.	
§63.5(c)		No	[Reserved].
§63.5(d)	Application for Approval of Construction/Reconstruction.	Yes.	
§63.5(e)	Approval of Construction/Reconstruction.	Yes.	

sfrattini on LAPJZKW1R2 with $$_JOB
VerDate Sep<11>2014 09:16 Apr 04, 2023 Jkt 256165 PO 00000 Frm 00562 Fmt 8010 Sfmt 8002 Q:\40\256165.XXX PC31

Citation	Requirement	Applies to subpart HHHH	Explanation
§ 63.5(f)	Approval of Construction/Reconstruction Based on State Review.	Yes.	
§ 63.6(a)	Compliance with Standards and Maintenance—Applicability.	Yes.	
§ 63.6(b)(1)–(5)	New and Reconstructed Sources–Dates.	Yes.	
§ 63.6(b)(6)		No	[Reserved].
§ 63.6(b)(7)		Yes.	
§ 63.6(c)(1)–(2)	Existing Sources Dates	Yes	§ 63.2985 specifies dates.
§ 63.6(c)(3)–(4)		No	[Reserved].
§ 63.6(c)(5)		Yes.	
§ 63.6(d)		No	[Reserved].
§ 63.6(e)(1)(i)	General Duty to Minimize Emissions.	No, for new or reconstructed sources which commenced construction or reconstruction after April 6, 2018. Yes, for all other affected sources before August 28, 2019, and No thereafter.	See § 63.2986(g) for general duty requirement.
§ 63.6(e)(1)(ii)	Requirement to Correct Malfunctions As Soon As Possible.	No, for new or reconstructed sources which commenced construction or reconstruction after April 6, 2018. Yes, for all other affected sources before August 28, 2019, and No thereafter.	
§ 63.6(e)(1)(iii)	Operation and Maintenance Requirements.	Yes	§§ 63.2984 and 63.2987 specify additional requirements.
§ 63.6(e)(2)		No	[Reserved].
§ 63.6(e)(3)	SSM Plan Requirements	No, for new or reconstructed sources which commenced construction or reconstruction after April 6, 2018. Yes, for all other affected sources before August 28, 2019, and No thereafter.	
§ 63.6(f)(1)	SSM Exemption	No, for new or reconstructed sources which commenced construction or reconstruction after April 6, 2018. Yes, for all other affected sources before August 28, 2019, and No thereafter.	
§ 63.6(f)(2) and (3)	Compliance with Non–Opacity Emission Standards.	Yes.	
§ 63.6(g)	Alternative Non–Opacity Emission Standard.	Yes	EPA retains approval authority.
§ 63.6(h)	Compliance with Opacity/Visible Emissions Standards.	No	Subpart HHHH does not specify opacity or visible emission standards.
§ 63.6(i)(1)–(14)	Extension of Compliance	Yes.	
§ 63.6(i)(15)		No	[Reserved].
§ 63.6(i)(16)		Yes.	
§ 63.6(j)	Exemption from Compliance	Yes.	
§ 63.7(a)	Performance Test Requirements—Applicability and Dates.	Yes.	
§ 63.7(b)	Notification of Performance Test.	Yes.	
§ 63.7(c)	Quality Assurance Program/Test Plan.	Yes.	
§ 63.7(d)	Testing Facilities	Yes.	

sfrattini on LAPJZKW1R2 with $$_JOB
VerDate Sep<11>2014 09:16 Apr 04, 2023 Jkt 256165 PO 00000 Frm 00563 Fmt 8010 Sfmt 8002 Q:\40\256165.XXX PC31

Citation	Requirement	Applies to subpart HHHH	Explanation
§ 63.7(e)(1)	Performance Testing	No, for new or reconstructed sources which commenced construction or reconstruction after April 6, 2018. Yes, for all other affected sources before August 28, 2019, and No thereafter.	See § 63.2992(c).
§ 63.7(e)(2)–(4)	Conduct of Tests	Yes	§§ 63.2991–63.2994 specify additional requirements.
§ 63.7(f)	Alternative Test Method	Yes	EPA retains approval authority
§ 63.7(g)	Data Analysis	Yes.	
§ 63.7(h)	Waiver of Tests	Yes.	
§ 63.8(a)(1)–(2)	Monitoring Requirements—Applicability.	Yes.	
§ 63.8(a)(3)		No	[Reserved].
§ 63.8(a)(4)		Yes.	
§ 63.8(b)	Conduct of Monitoring	Yes.	
§ 63.8(c)(1)(i)	General Duty to Minimize Emissions and CMS Operation.	No, for new or reconstructed sources which commenced construction or reconstruction after April 6, 2018. Yes, for all other affected sources before August 28, 2019, and No thereafter.	
§ 63.8(c)(1)(ii)	Continuous Monitoring System (CMS) Operation and Maintenance.	Yes.	
§ 63.8(c)(1)(iii)	Requirement to Develop SSM Plan for CMS.	No, for new or reconstructed sources which commenced construction or reconstruction after April 6, 2018. Yes, for all other affected sources before August 28, 2019, and No thereafter.	
§ 63.8(c)(2)–(4)		Yes.	
§ 63.8(c)(5)	Continuous Opacity Monitoring System (COMS) Procedures.	No	Subpart HHHH does not specify opacity or visible emission standards.
§ 63.8(c)(6)–(8)		Yes.	
§ 63.8(d)(1) and (2)	Quality Control	Yes.	
§ 63.8(d)(3)	Written Procedures for CMS	No, for new or reconstructed sources which commenced construction or reconstruction after April 6, 2018. Yes, for all other affected sources before August 28, 2019, and No thereafter.	See § 63.2994(a).
§ 63.8(e)	CMS Performance Evaluation	Yes.	
§ 63.8(f)(1)–(5)	Alternative Monitoring Method	Yes	EPA retains approval authority.
§ 63.8(f)(6)	Alternative to Relative Accuracy Test.	No	Subpart HHHH does not require the use of continuous emissions monitoring systems (CEMS).
§ 63.8(g)(1)	Data Reduction	Yes.	
§ 63.8(g)(2)	Data Reduction	No	Subpart HHHH does not require the use of CEMS or COMS.
§ 63.8(g)(3)–(5)	Data Reduction	Yes.	
§ 63.9(a)	Notification Requirements—Applicability.	Yes.	
§ 63.9(b)	Initial Notifications	Yes.	
§ 63.9(c)	Request for Compliance Extension.	Yes.	
§ 63.9(d)	New Source Notification for Special Compliance Requirements.	Yes.	
§ 63.9(e)	Notification of Performance Test.	Yes.	

sfrattini on LAPJZKW1R2 with $$_JOB
VerDate Sep<11>2014 09:16 Apr 04, 2023 Jkt 256165 PO 00000 Frm 00564 Fmt 8010 Sfmt 8002 Q:\40\256165.XXX PC31

Citation	Requirement	Applies to subpart HHHH	Explanation
§ 63.9(f)	Notification of Visible Emissions/Opacity Test.	No	Subpart HHHH does not specify opacity or visible emission standards.
§ 63.9(g)(1)	Additional CMS Notifications	Yes.	
§ 63.9(g)(2)–(3)		No	Subpart HHHH does not require the use of COMS or CEMS.
§ 63.9(h)(1)–(3)	Notification of Compliance Status.	Yes	§ 63.3000(b) specifies additional requirements.
§ 63.9(h)(4)		No	[Reserved].
§ 63.9(h)(5)–(6)		Yes.	
§ 63.9(i)	Adjustment of Deadlines	Yes.	
§ 63.9(j)	Change in Previous Information	Yes.	
§ 63.9(k)	Electronic reporting procedures	Yes	Only as specified in § 63.9(j).
§ 63.10(a)	Recordkeeping/Reporting—Applicability.	Yes.	
§ 63.10(b)(1)	General Recordkeeping Requirements.	Yes	§ 63.2998 includes additional requirements.
§ 63.10(b)(2)(i)	Recordkeeping of Occurrence and Duration of Startups and Shutdowns.	No, for new or reconstructed sources which commenced construction or reconstruction after April 6, 2018. Yes, for all other affected sources before August 28, 2019, and No thereafter.	
§ 63.10(b)(2)(ii)	Recordkeeping of Failures to Meet a Standard.	No, for new or reconstructed sources which commenced construction or reconstruction after April 6, 2018. Yes, for all other affected sources before August 28, 2019, and No thereafter.	See § 63.2998(g) for recordkeeping requirements for an affected source that fails to meet an applicable standard.
§ 63.10(b)(2)(iii)	Maintenance Records	Yes.	
§ 63.10(b)(2)(iv) and (v)	Actions Taken to Minimize Emissions During SSM.	No, for new or reconstructed sources which commenced construction or reconstruction after April 6, 2018. Yes, for all other affected sources before August 28, 2019, and No thereafter.	
§ 63.10(b)(2)(vi)	Recordkeeping for CMS Malfunctions.	Yes.	
§ 63.10(b)(2)(vii)–(xiv)	Other CMS Requirements	Yes.	
§ 63.10(b)(3)	Recordkeeping requirement for applicability determinations.	Yes.	
§ 63.10(c)(1)	Additional CMS Recordkeeping	Yes.	
§ 63.10(c)(2)–(4)		No	[Reserved].
§ 63.10(c)(5)–(8)		Yes.	
§ 63.10(c)(9)		No	[Reserved].
§ 63.10(c)(10)–(14)		Yes.	
§ 63.10(c)(15)	Use of SSM Plan	No, for new or reconstructed sources which commenced construction or reconstruction after April 6, 2018. Yes, for all other affected sources before August 28, 2019, and No thereafter.	
§ 63.10(d)(1)	General Reporting Requirements.	Yes	§ 63.3000 includes additional requirements.
§ 63.10(d)(2)	Performance Test Results	Yes	§ 63.3000 includes additional requirements.
§ 63.10(d)(3)	Opacity or Visible Emissions Observations.	No	Subpart HHHH does not specify opacity or visible emission standards.
§ 63.10(d)(4)	Progress Reports Under Extension of Compliance.	Yes.	

sfrattini on LAPJZKW1R2 with $$_JOB
VerDate Sep<11>2014 09:16 Apr 04, 2023 Jkt 256165 PO 00000 Frm 00565 Fmt 8010 Sfmt 8002 Q:\40\256165.XXX PC31

Citation	Requirement	Applies to subpart HHHH	Explanation
§ 63.10(d)(5)	SSM Reports	No, for new or reconstructed sources which commenced construction or reconstruction after April 6, 2018. Yes, for all other affected sources before August 28, 2019, and No thereafter.	See § 63.3000(c) for malfunction reporting requirements.
§ 63.10(e)(1)	Additional CMS Reports—General.	No	Subpart HHHH does not require CEMS.
§ 63.10(e)(2)	Reporting results of CMS performance evaluations..	Yes.	
§ 63.10(e)(3)	Excess Emission/CMS Performance Reports..	Yes.	
§ 63.10(e)(4)	COMS Data Reports	No	Subpart HHHH does not specify opacity or visible emission standards.
§ 63.10(f)	Recordkeeping/Reporting Waiver.	Yes	EPA retains approval authority.
§ 63.11	Control Device Requirements—Applicability..	No	Facilities subject to subpart HHHH do not use flares as control devices.
§ 63.12	State Authority and Delegations	Yes.	
§ 63.13	Addresses	Yes.	
§ 63.14	Incorporation by Reference	Yes	See § 63.14(b)(2) and (3) for applicability requirements.
§ 63.15	Availability of Information/Confidentiality.	Yes.	

[84 FR 6697, Feb. 28, 2019, as amended at 85 FR 73904, Nov. 19, 2020]

APPENDIX A TO SUBPART HHHH OF PART 63—METHOD FOR DETERMINING FREE-FORMALDEHYDE IN UREA-FORMALDEHYDE RESINS BY SODIUM SULFITE (ICED & COOLED)

1.0 Scope

This procedure corresponds to the Housing and Urban Development method of determining free-formaldehyde in urea-formaldehyde resins. This method applies to samples that decompose to yield formaldehyde under the conditions of other free-formaldehyde methods. The primary use is for urea-formaldehyde resins.

2.0 Part A—Testing Resins

Formaldehyde will react with sodium sulfite to form the sulfite addition products and liberate sodium hydroxide (NaOH); however, at room temperature, the methanol groups present will also react to liberate NaOH. Titrate at 0 degrees Celsius (°C) to minimize the reaction of the methanol groups.

2.1 Apparatus Required.

2.1.1 Ice crusher.

2.1.2 One 100-milliliter (mL) graduated cylinder.

2.1.3 Three 400-mL beakers.

2.1.4 One 50-mL burette.

2.1.5 Analytical balance accurate to 0.1 milligrams (mg).

2.1.6 Magnetic stirrer.

2.1.7 Magnetic stirring bars.

2.1.8 Disposable pipettes.

2.1.9 Several 5-ounce (oz.) plastic cups.

2.1.10 Ice cube trays (small cubes).

2.2 Materials Required.

2.2.1 Ice cubes (made with distilled water).

2.2.2 A solution of 1 molar (M) sodium sulfite (Na_2SO_3) (63 grams (g) Na_2SO_3/500 mL water (H_2O) neutralized to thymolphthalein endpoint).

2.2.3 Standardized 0.1 normal (N) hydrochloric acid (HCl).

2.2.4 Thymolphthalein indicator (1.0 g thymolphthalein/199 g methanol).

2.2.5 Sodium chloride (NaCl) (reagent grade).

2.2.6 Sodium hydroxide (NaOH).

2.3 Procedure.

2.3.1 Prepare sufficient quantity of crushed ice for three determinations (two trays of cubes).

2.3.2 Put 70 cubic centimeters (cc) of 1 M Na_2SO_3 solution into a 400-mL beaker. Begin stirring and add approximately 100 g of crushed ice and 2 g of NaCl. Maintain 0 °C during test, adding ice as necessary.

2.3.3 Add 10–15 drops of thymolphthalein indicator to the chilled solution. If the solution remains clear, add 0.1 N NaOH until the solution turns blue; then add 0.1 N HCl back to the colorless endpoint. If the solution turns blue upon adding the indicator, add 0.1 N HCl to the colorless endpoint.

sfrattini on LAPJZKW1R2 with $$_JOB
VerDate Sep<11>2014 09:16 Apr 04, 2023 Jkt 256165 PO 00000 Frm 00566 Fmt 8010 Sfmt 8002 Q:\40\256165.XXX PC31

2.3.4 On the analytical balance, accurately weigh the amount of resin indicated under the ''*Resin Sample Size*'' chart (see below) as follows.

RESIN SAMPLE SIZE

Approximate free HCHO (percent)	Sample weight (gram(s))
<0.5	10
0.5–1.0	5
1.0–3.0	2
3.0	1

2.3.4.1 Pour about 1 inch of resin into a 5 oz. plastic cup.

2.3.4.2 Determine the gross weight of the cup, resin, and disposable pipette (with the narrow tip broken off) fitted with a small rubber bulb.

2.3.4.3 Pipette out the desired amount of resin into the stirring, chilled solution (approximately 1.5 to 2 g per pipette-full).

2.3.4.4 Quickly reweigh the cup, resin, and pipette with the bulb.

2.3.4.5 The resultant weight loss equals the grams of resin being tested.

2.3.5 Rapidly titrate the solution with 0.1 N HCl to the colorless endpoint described in Step 3 (2.3.3).

2.3.6 Repeat the test in triplicate.

2.4 Calculation.

2.4.1 The percent free-formaldehyde (%HCHO) is calculated as follows:

$$\%\text{HCHO} = \frac{(\text{mL 0.1 N HCl})\ (\text{N of Acid})\ (3.003)}{\text{Weight of Sample}}$$

2.4.2 Compute the average percent free-formaldehyde of the three tests.

(NOTE: If the results of the three tests are not within a range of ±0.5 percent or if the average of the three tests does not meet expected limits, carry out Part B and then repeat Part A.)

3.0 Part B—Standard Check

Part B ensures that test reagents used in determining percent free-formaldehyde in urea-formaldehyde resins are of proper concentration and that operator technique is correct. Should any doubts arise in either of these areas, the formaldehyde standard solution test should be carried out.

3.1 Preparation and Standardization of a 1 Percent Formalin Solution.

Prepare a solution containing approximately 1 percent formaldehyde from a stock 37 percent formalin solution. Standardize the prepared solution by titrating the hydroxyl ions resulting from the formation of the formaldehyde bisulfite complex.

3.2 Apparatus Required.

NOTE: All reagents must be American Chemical Society analytical reagent grade or better.

3.2.1 One 1-liter (L) volumetric flask (class A).

3.2.2 One 250-mL volumetric flask (class A).

3.2.3 One 250-mL beaker.

3.2.4 One 100-mL pipette (class A).

3.2.5 One 10-mL pipette (class A).

3.2.6 One 50-mL graduated cylinder (class A).

3.2.7 A pH meter, standardized using pH 7 and pH 10 buffers.

3.2.8 Magnetic stirrer.

3.2.9 Magnetic stirring bars.

3.2.10 Several 5-oz. plastic cups.

3.2.11 Disposal pipettes.

3.2.12 Ice cube trays (small cubes).

3.3 Materials Required.

3.3.1 A solution of 37 percent formalin.

3.3.2 Anhydrous Na_2SO_3.

3.3.3 Distilled water.

3.3.4 Standardized 0.100 N HCl.

3.3.5 Thymolphthalein indicator (1.0 g thymolphthalein/199 g methanol).

3.4 Preparation of Solutions and Reagents.

3.4.1 Formaldehyde Standard Solution (approximately 1 percent). Measure, using a graduated cylinder, 27.0 mL of analytical reagent 37 percent formalin solution into a 1-L volumetric flask. Fill the flask to volume with distilled water.

(NOTE: You must standardize this solution as described in section 3.5. This solution is stable for 3 months.)

3.4.2 Sodium Sulfite Solution 1.0 M (used for standardization of Formaldehyde Standard Solution). Quantitatively transfer, using distilled water as the transfer solvent, 31.50 g of anhydrous Na_2SO_3 into a 250-mL volumetric flask. Dissolve in approximately 100 mL of distilled water and fill to volume.

(NOTE: You must prepare this solution daily, but the calibration of the Formaldehyde Standard Solution needs to be done only once.)

3.4.3 Hydrochloric Acid Standard Solution 0.100 M. This reagent should be readily available as a primary standard that only needs to be diluted.

3.5 Standardization.

3.5.1 Standardization of Formaldehyde Standard Solution.

sfrattini on LAPJZKW1R2 with $$_JOB
VerDate Sep<11>2014 09:16 Apr 04, 2023 Jkt 256165 PO 00000 Frm 00567 Fmt 8010 Sfmt 8002 Q:\40\256165.XXX PC31
ER11AP02.024</GPH>

3.5.1.1 Pipette 100.0 mL of 1 M sodium sulfite into a stirred 250-mL beaker.

3.5.1.2 Using a standardized pH meter, measure and record the pH. The pH should be around 10. It is not essential the pH be 10; however, it is essential that the value be accurately recorded.

3.5.1.3 To the stirring Na_2SO_3 solution, pipette in 10.0 mL of Formaldehyde Standard Solution. The pH should rise sharply to about 12.

3.5.1.4 Using the pH meter as a continuous monitor, titrate the solution back to the original exact pH using 0.100 N HCl. Record the milliliters of HCl used as titrant. (NOTE: Approximately 30 to 35 mL of HCl will be required.)

3.5.1.5 Calculate the concentration of the Formaldehyde Standard Solution using the equation as follows:

$$\%\text{HCHO} = \frac{(\text{mL HCl})\ (\text{N HCl})\ (3.003)}{\text{mL sample}}$$

3.6 Procedure.

3.6.1 Prepare a sufficient quantity of crushed ice for three determinations (two trays of cubes).

3.6.2 Put 70 cc of 1 M Na_2SO_3 solution into a 400-mL beaker. Begin stirring and add approximately 100 g of crushed ice and 2 g NaCl. Maintain 0 °C during the test, adding ice as necessary.

3.6.3 Add 10–15 drops of thymolphthalein indicator to the chilled solution. If the solution remains clear, add 0.1 N NaOH until the solution turns blue; then add 0.1 N HCl back to the colorless endpoint. If the solution turns blue upon adding the indicator, add 0.1 N HCl to the colorless endpoint.

3.6.4 On the analytical balance, accurately weigh a sample of Formaldehyde Standard Solution as follows.

3.6.4.1 Pour about 0.5 inches of Formaldehyde Standard Solution into a 5-oz. plastic cup.

3.6.4.2 Determine the gross weight of the cup, Formaldehyde Standard Solution, and a disposable pipette fitted with a small rubber bulb.

3.6.4.3 Pipette approximately 5 g of the Formaldehyde Standard Solution into the stirring, chilled Na_2SO_3 solution.

3.6.4.4 Quickly reweigh the cup, Formaldehyde Standard Solution, and pipette with the bulb.

3.6.4.5 The resultant weight loss equals the grams of Formaldehyde Standard Solution being tested.

3.6.5 Rapidly titrate the solution with 0.1 N HCl to the colorless endpoint in Step 3 (3.6.3).

3.6.6 Repeat the test in triplicate.

3.7 Calculation for Formaldehyde Standard Solution.

3.7.1 The percent free-formaldehyde (% HCHO) is calculated as follows:

$$\%\text{HCHO} = \frac{(\text{mL 0.1 N HCl})(\text{N Acid})(3.003)}{\text{Weight of Formaldehyde Standard Solution}}$$

3.7.2 The range of the results of three tests should be no more than ±5 percent of the actual Formaldehyde Standard Solution concentration. Report results to two decimal places.

3.8 Reference.

West Coast Adhesive Manufacturers Trade Association Test 10.1.

APPENDIX B TO SUBPART HHHH OF PART 63—METHOD FOR THE DETERMINATION OF LOSS-ON-IGNITION

1.0 Purpose

The purpose of this test is to determine the loss-on-ignition (LOI) of wet-formed fiberglass mat.

2.0 Equipment

2.1 Scale sensitive to 0.001 gram (g).

2.2 Drying oven equipped with a means of constant temperature regulation and mechanical air convection.

2.3 Furnace designed to heat to at least 625 °C (1,157 °F) and controllable to ±25 °C (±45 °F).

2.4 Crucible, high form, 250 milliliter (mL).

2.5 Desiccator.

2.6 Pan balance (see Note 2 in 4.9)

3.0 Sample Collection Procedure

3.1 Obtain a sample of mat in accordance with Technical Association of the Pulp and Paper Industry (TAPPI) method 1007 ''Sample Location.''

3.2 Use a 5- to 10-g sample cut into pieces small enough to fit into the crucible.

3.3 Place the sample in the crucible. (NOTE 1: To test without the use of a crucible, see Note 2 after Section 4.8.)

3.4 Condition the sample in the furnace set at 105 ±3 °C (221 ±9 °F) for 5 minutes ±30 seconds.

sfrattini on LAPJZKW1R2 with $$_JOB
VerDate Sep<11>2014 09:16 Apr 04, 2023 Jkt 256165 PO 00000 Frm 00568 Fmt 8010 Sfmt 8002 Q:\40\256165.XXX PC31
ER11AP02.025</GPH> ER11AP02.026</GPH>

4.0 Procedure

4.1 Condition each sample by drying for 5 minutes ±30 seconds at 105 ±3 °C (22 ±5 °F).

4.2 Remove the test sample from the furnace and cool in the desiccator for 30 minutes in the standard atmosphere for testing glass textiles.

4.3 Place the empty crucible in the furnace at 625 ±25 °C (1,157 ±45 °F). After 30 minutes, remove and cool the crucible in the standard atmosphere (TAPPI method 1008) for 30 minutes.

4.4 Identify each crucible with respect to each test sample of mat.

4.5 Weigh the empty crucible to the nearest 0.001 g. Record this weight as the tare mass, T.

4.6 Place the test sample in the crucible and weigh to the nearest 0.001 g. Record this weight as the initial mass, A.

4.7 Place the test sample and crucible in the furnace and ignite at 625 ±25 °C (1,157 ±45 °F).

4.8 After ignition for at least 30 minutes, remove the test sample and crucible from the furnace and cool in the desiccator for 30 minutes in the standard atmosphere (TAPPI method 1008).

4.9 Remove each crucible, and test each sample separately from the desiccator, and immediately weigh each sample to the nearest 0.001 g. Record this weight as the ignited mass, B. (NOTE 2: When it is known that no ash residue separates from the test sample during the weighing and igniting processes, you may weigh the sample separately without the crucible. When this occurs, the tare mass (T) equals zero. With appropriate care, you can dry and weigh a single piece of mat and place with tongs into the ignition oven on appropriate refractory supports. When the ignition time is over, remove the sample as an intact fragile web and weigh it directly on a pan balance.)

5.0 Calculation

5.1 Calculate the LOI for each sample as follows:

$$\% \text{ LOI} = 100 \times (A - B)/(A - T)$$

Where:

A = initial mass of crucible and sample before ignition (g);

B = mass of crucible and glass residue after ignition (g); and

T = tare mass of crucible, (g) (see Note 2).

5.2 Report the percent LOI of the glass mat to the nearest 0.1 percent.

6.0 Precision

The repeatability of this test method for measurements on adjacent specimens from the same sample of mat is better than 1 percent.

Subpart IIII—National Emission Standards for Hazardous Air Pollutants: Surface Coating of Automobiles and Light-Duty Trucks

SOURCE: 69 FR 22623, Apr. 26, 2004, unless otherwise noted.

WHAT THIS SUBPART COVERS

§63.3080 What is the purpose of this subpart?

This subpart establishes national emission standards for hazardous air pollutants (NESHAP) for facilities which surface coat new automobile or new light-duty truck bodies or body parts for new automobiles or new light-duty trucks. This subpart also establishes NESHAP for facilities which surface coat new other motor vehicle bodies or body parts for new other motor vehicles which you choose to include in your affected source pursuant to §63.3082(c). This subpart also establishes requirements to demonstrate initial and continuous compliance with the emission limitations.

[71 FR 76926, Dec. 22, 2006]

§63.3081 Am I subject to this subpart?

(a) Except as provided in paragraph (c) of this section, the source category to which this subpart applies is automobile and light-duty truck surface coating.

(b) You are subject to this subpart if you own or operate a new, reconstructed, or existing affected source, as defined in §63.3082, that, except as noted in paragraph (b)(1) of this section, is located at a facility which applies topcoat to new automobile or new light-duty truck bodies or body parts for new automobiles or new light-duty trucks, and that is a major source, is located at a major source, or is part of a major source of emissions of hazardous air pollutants (HAP). You are subject to this subpart if you own or operate a new, reconstructed, or existing affected source, as defined in §63.3082, in which you choose to include, pursuant to §63.3082(c), any coating operations which apply coatings to new other motor vehicle bodies or body parts for new other motor vehicles;

sfrattini on LAPJZKW1R2 with $$_JOB
VerDate Sep<11>2014 09:16 Apr 04, 2023 Jkt 256165 PO 00000 Frm 00569 Fmt 8010 Sfmt 8010 Q:\40\256165.XXX PC31
ER11AP02.027</GPH>

parts intended for use in new automobiles, new light-duty trucks, or new other motor vehicles; or aftermarket repair or replacement parts for automobiles, light-duty trucks, or other motor vehicles; and the affected source is located at a facility that is a major source, is located at a major source, or is part of a major source of emissions of HAP. A major source of HAP emissions is any stationary source or group of stationary sources located within a contiguous area and under common control that emits or has the potential to emit any single HAP at a rate of 9.07 megagrams (Mg) (10 tons) or more per year or any combination of HAP at a rate of 22.68 Mg (25 tons) or more per year.

(1) You are not subject to this subpart if you meet all of the criteria of paragraphs (b)(1)(i) through (iii) of this section:

(i) Your coating operation is located at a plastic or composites molding facility;

(ii) All of the body parts topcoated at your facility for use in new automobiles or new light-duty trucks were fabricated (molded, stamped, formed, etc.) at your facility or at another plastic or composites molding facility which you own or operate, and none of the new vehicles in which these body parts are used are assembled at your facility; and

(iii) You do not topcoat all of the body parts for any single new automobile or new light-duty truck at your facility.

(2) [Reserved]

(c) This subpart does not apply to surface coating, surface preparation, or cleaning activities that meet the criteria of paragraph (c)(1) or (2) of this section.

(1) Surface coating subject to any other NESHAP in this part as of June 25, 2004 except as provided in § 63.3082(c).

(2) Surface coating that occurs during research or laboratory activities or that is part of janitorial, building, and facility maintenance operations, including maintenance spray booths used for painting production equipment, furniture, signage, etc., for use within the plant.

[57 FR 61992, Dec. 29, 1992, as amended at 72 FR 20233, Apr. 24, 2007]

§ 63.3082 What parts of my plant does this subpart cover?

(a) This subpart applies to each new, reconstructed, and existing affected source.

(b) The affected source is the collection of all of the items listed in paragraphs (b)(1) through (4) of this section that are used for surface coating of new automobile or new light-duty truck bodies, or body parts for new automobiles or new light-duty trucks:

(1) All coating operations as defined in § 63.3176.

(2) All storage containers and mixing vessels in which coatings, thinners, and cleaning materials are stored or mixed.

(3) All manual and automated equipment and containers used for conveying coatings, thinners, and cleaning materials.

(4) All storage containers and all manual and automated equipment and containers used for conveying waste materials generated by a coating operation.

(c) In addition, you may choose to include in your affected source, and thereby make subject to the requirements of this subpart, any coating operations, as defined in § 63.3176, which would otherwise be subject to the National Emission Standards for Hazardous Air Pollutants for Surface Coating of Miscellaneous Metal Parts and Products (subpart MMMM of this part) or the National Emission Standards for Hazardous Air Pollutants for Surface Coating of Plastic Parts and Products (subpart PPPP of this part) which apply coatings to new other motor vehicle bodies or body parts for new other motor vehicles, parts intended for use in new automobiles, new light-duty trucks, or new other motor vehicles, or aftermarket repair or replacement parts for automobiles, light-duty trucks, or other motor vehicles.

(d) For all coating operations which you choose to add to your affected source pursuant to paragraph (c) of this section:

(1) All associated storage containers and mixing vessels in which coatings,

sfrattini on LAPJZKW1R2 with $$_JOB
VerDate Sep<11>2014 09:16 Apr 04, 2023 Jkt 256165 PO 00000 Frm 00570 Fmt 8010 Sfmt 8010 Q:\40\256165.XXX PC31

thinners, and cleaning materials are stored or mixed; manual and automated equipment and containers used for conveying coatings, thinners, and cleaning materials; and storage containers and manual and automated equipment and containers used for conveying waste materials are also included in your affected source and are subject to the requirements of this subpart.

(2) All cleaning and purging of equipment associated with the added surface coating operations is subject to the requirements of this subpart.

(3) You must identify and describe all additions to the affected source made pursuant to paragraph (c) of this section in the initial notification required in § 63.3110(b).

(e) An affected source is a new affected source if:

(1) You commenced its construction after December 24, 2002; and

(2) The construction is of a completely new automobile and light-duty truck assembly plant, automobile and light-duty truck paint shop, automobile and light-duty truck topcoat operation, other motor vehicle assembly plant, other motor vehicle paint shop, or other motor vehicle topcoat operation where previously no automobile and light-duty truck assembly plant, automobile and light-duty truck assembly paint shop, or automobile and light-duty truck assembly topcoat operation had existed; and

(i) No other motor vehicle assembly plant, other motor vehicle paint shop, or other motor vehicle topcoat operation had existed previously; or

(ii) No previously existing other motor vehicle assembly plant, other motor vehicle paint shop, or other motor vehicle topcoat operation is subject to this subpart; or

(iii) If the facility was previously not a major source for HAP, no previously existing other motor vehicle assembly plant, other motor vehicle paint shop, or other motor vehicle topcoat operation is made part of the affected source under this subpart.

(f) An affected source is reconstructed if its paint shop undergoes replacement of components to such an extent that:

(1) The fixed capital cost of the new components exceeded 50 percent of the fixed capital cost that would be required to construct a new paint shop; and

(2) It was technologically and economically feasible for the reconstructed source to meet the relevant standards established by the Administrator pursuant to section 112 of the Clean Air Act (CAA).

(g) An affected source is existing if it is not new or reconstructed.

[69 FR 22623, Apr. 26, 2004, as amended at 71 FR 76926, Dec. 22, 2006]

§ 63.3083 When do I have to comply with this subpart?

The date by which you must comply with this subpart is called the compliance date. The compliance date for each type of affected source is specified in paragraphs (a) through (c) of this section. The compliance date begins the initial compliance period during which you conduct the initial compliance demonstrations described in §§ 63.3150, 63.3160, and 63.3170.

(a) For a new or reconstructed affected source, the compliance date is the applicable date in paragraph (a)(1) or (2) of this section:

(1) If the initial startup of your new or reconstructed affected source is before June 25, 2004, the compliance date is June 25, 2004.

(2) If the initial startup of your new or reconstructed affected source occurs after June 25, 2004, the compliance date is the date of initial startup of your affected source.

(b) For an existing affected source, the compliance date is April 26, 2007.

(c) For an area source that increases its emissions or its potential to emit such that it becomes a major source of HAP emissions, the compliance date is specified in paragraphs (c)(1) and (2) of this section.

(1) For any portion of the source that becomes a new or reconstructed affected source subject to this subpart, the compliance date is the date of initial startup of the affected source or June 25, 2004, whichever is later.

(2) For any portion of the source that becomes an existing affected source subject to this subpart, the compliance date is the date 1 year after the area

sfrattini on LAPJZKW1R2 with $$_JOB
VerDate Sep<11>2014 09:16 Apr 04, 2023 Jkt 256165 PO 00000 Frm 00571 Fmt 8010 Sfmt 8010 Q:\40\256165.XXX PC31

source becomes a major source or April 26, 2007, whichever is later.

(d) You must meet the notification requirements in § 63.3110 according to the dates specified in that section and in subpart A of this part. Some of the notifications must be submitted before the compliance dates described in paragraphs (a) through (c) of this section.

EMISSION LIMITATIONS

§ 63.3090 What emission limits must I meet for a new or reconstructed affected source?

(a) Except as provided in paragraph (b) of this section, you must limit combined organic HAP emissions to the atmosphere from electrodeposition primer, primer-surfacer, topcoat, final repair, glass bonding primer and glass bonding adhesive operations plus all coatings and thinners, except for deadener materials and for adhesive and sealer materials that are not components of glass bonding systems, used in coating operations added to the affected source pursuant to § 63.3082(c) to no more than 0.036 kilogram (kg)/liter (0.30 pound (lb)/gallon (gal)) of coating solids deposited during each month, determined according to the requirements in § 63.3161.

(b) If you meet the operating limits of § 63.3092(a) or (b), you must either meet the emission limits of paragraph (a) of this section or limit combined organic HAP emissions to the atmosphere from primer-surfacer, topcoat, final repair, glass bonding primer, and glass bonding adhesive operations plus all coatings and thinners, except for deadener materials and for adhesive and sealer materials that are not components of glass bonding systems, used in coating operations added to the affected source pursuant to § 63.3082(c) to no more than 0.060 kg/liter (0.50 lb/gal) of applied coating solids used during each month, determined according to the requirements in § 63.3171. If you do not have an electrodeposition primer system, you must limit combined organic HAP emissions to the atmosphere from primer-surfacer, topcoat, final repair, glass bonding primer, and glass bonding adhesive operations plus all coatings and thinners, except for deadener materials and for adhesive and sealer materials that are not components of glass bonding systems, used in coating operations added to the affected source pursuant to § 63.3082(c) to no more than 0.060 kg/liter (0.50 lb/gal) of applied coating solids used during each month, determined according to the requirements in § 63.3171.

(c) You must limit average organic HAP emissions from all adhesive and sealer materials other than materials used as components of glass bonding systems to no more than 0.010 kg/kg (lb/lb) of adhesive and sealer material used during each month.

(d) You must limit average organic HAP emissions from all deadener materials to no more than 0.010 kg/kg (lb/lb) of deadener material used during each month.

(e) For coatings and thinners used in coating operations added to the affected source pursuant to § 63.3082(c):

(1) Adhesive and sealer materials that are not components of glass bonding systems are subject to and must be included in your demonstration of compliance for paragraph (c) of this section.

(2) Deadener materials are subject to and must be included in your demonstration of compliance for paragraph (d) of this section.

(3) All other coatings and thinners are subject to and must be included in your demonstration of compliance for paragraphs (a) or (b) of this section.

(f) If your facility has multiple paint lines (*e.g.*, two or more totally distinct paint lines each serving a distinct assembly line, or a facility with two or more paint lines sharing the same paint kitchen or mix room), then for the operations addressed in paragraphs (a) and (b) of this section:

(1) You may choose to use a single grouping under paragraph (a) of this section for all of your electrodeposition primer, primer-surfacer, topcoat, final repair, glass bonding primer, and glass bonding adhesive operations.

(2) You may choose to use a single grouping under paragraph (b) of this section for all of your primer-surfacer, topcoat, final repair, glass bonding primer, and glass bonding adhesive operations as long as each of your electrodeposition primer systems

sfrattini on LAPJZKW1R2 with $$_JOB
VerDate Sep<11>2014 09:16 Apr 04, 2023 Jkt 256165 PO 00000 Frm 00572 Fmt 8010 Sfmt 8010 Q:\40\256165.XXX PC31

meets the operating limits of §63.3092(a) or (b).

(3) You may choose to use one or more groupings under paragraph (a) of this section for the electrodeposition primer, primer-surfacer, topcoat, final repair, glass bonding primer, and glass bonding adhesive operations from one or more of your paint lines; and one or more groupings under paragraph (b) of this section for the primer-surfacer, topcoat, final repair, glass bonding primer, and glass bonding adhesive operations from the remainder of your paint lines, as long as each electrodeposition primer system associated with each paint line you include in a grouping under paragraph (b) of this section meets the operating limits of §63.3092(a) or (b). For example, if your facility has three paint lines, you may choose to use one grouping under paragraph (a) of this section for two of the paint lines; and a separate grouping under paragraph (b) of this section for the third paint line, as long as the electrodeposition primer system associated with the paint line you include in the grouping under paragraph (b) of this section meets the operating limits of §63.3092(a) or (b). Alternatively, you may choose to use one grouping for two of the paint lines and a separate grouping of the same type for the third paint line. Again, each electrodeposition primer system associated with each paint line you include in a grouping under paragraph (b) of this section must meet the operating limits of §63.3092(a) or (b).

(4) You may choose to consider the electrodeposition primer, primer-surfacer, topcoat, final repair, glass bonding primer, and glass bonding adhesive operations from each of your paint lines as a separate grouping under either paragraph (a) or paragraph (b) of this section. The electrodeposition primer system associated with each paint line you choose to consider in a grouping under paragraph (b) of this section must meet the operating limits of §63.3092(a) or (b). For example, if your facility has two paint lines, you may choose to use the grouping under paragraph (a) of this section for one paint line and the grouping under paragraph (b) of this section for the other paint line.

§63.3091 What emission limits must I meet for an existing affected source?

(a) Except as provided in paragraph (b) of this section, you must limit combined organic HAP emissions to the atmosphere from electrodeposition primer, primer-surfacer, topcoat, final repair, glass bonding primer, and glass bonding adhesive operations plus all coatings and thinners, except for deadener materials and for adhesive and sealer materials that are not components of glass bonding systems, used in coating operations added to the affected source pursuant to §63.3082(c) to no more than 0.072 kg/liter (0.60 lb/gal) of coating solids deposited during each month, determined according to the requirements in §63.3161.

(b) If you meet the operating limits of §63.3092(a) or (b), you must either meet the emission limits of paragraph (a) of this section or limit combined organic HAP emissions to the atmosphere from primer-surfacer, topcoat, final repair, glass bonding primer, and glass bonding adhesive operations plus all coatings and thinners, except for deadener materials and for adhesive and sealer materials that are not components of glass bonding systems, used in coating operations added to the affected source pursuant to §63.3082(c) to no more than 0.132 kg/liter (1.10 lb/gal) of coating solids deposited during each month, determined according to the requirements in §63.3171. If you do not have an electrodeposition primer system, you must limit combined organic HAP emissions to the atmosphere from primer-surfacer, topcoat, final repair, glass bonding primer, and glass bonding adhesive operations plus all coatings and thinners, except for deadener materials and for adhesive and sealer materials that are not components of glass bonding systems, used in coating operations added to the affected source pursuant to §63.3082(c) to no more than 0.132 kg/liter (1.10 lb/gal) of coating solids deposited during each month, determined according to the requirements in §63.3171.

(c) You must limit average organic HAP emissions from all adhesive and sealer materials other than materials used as components of glass bonding systems to no more than 0.010 kg/kg

sfrattini on LAPJZKW1R2 with $$_JOB
VerDate Sep<11>2014 09:16 Apr 04, 2023 Jkt 256165 PO 00000 Frm 00573 Fmt 8010 Sfmt 8010 Q:\40\256165.XXX PC31

(lb/lb) of adhesive and sealer material used during each month.

(d) You must limit average organic HAP emissions from all deadener materials to no more than 0.010 kg/kg (lb/lb) of deadener material used during each month.

(e) For coatings and thinners used in coating operations added to the affected source pursuant to § 63.3082(c):

(1) Adhesive and sealer materials that are not components of glass bonding systems are subject to and must be included in your demonstration of compliance for paragraph (c) of this section.

(2) Deadener materials are subject to and must be included in your demonstration of compliance for paragraph (d) of this section.

(3) All other coatings and thinners are subject to and must be included in your demonstration of compliance for paragraphs (a) or (b) of this section.

(f) If your facility has multiple paint lines (*e.g.*, two or more totally distinct paint lines each serving a distinct assembly line, or a facility with two or more paint lines sharing the same paint kitchen or mix room), then for the operations addressed in paragraphs (a) and (b) of this section:

(1) You may choose to use a single grouping under paragraph (a) of this section for all of your electrodeposition primer, primer-surfacer, topcoat, final repair, glass bonding primer, and glass bonding adhesive operations.

(2) You may choose to use a single grouping under paragraph (b) of this section for all of your primer-surfacer, topcoat, final repair, glass bonding primer, and glass bonding adhesive operations, as long as each of your electrodeposition primer systems meets the operating limits of § 63.3092(a) or (b).

(3) You may choose to use one or more groupings under paragraph (a) of this section for the electrodeposition primer, primer-surfacer, topcoat, final repair, glass bonding primer, and glass bonding adhesive operations from one or more of your paint lines; and one or more groupings under paragraph (b) of this section for the primer-surfacer, topcoat, final repair, glass bonding primer, and glass bonding adhesive operations from the remainder of your paint lines, as long as each electrodeposition primer system associated with each paint line you include in a grouping under paragraph (b) of this section meets the operating limits of § 63.3092(a) or (b). For example, if your facility has three paint lines, you may choose to use one grouping under paragraph (a) of this section for two of the paint lines and a separate grouping under paragraph (b) of this section for the third paint line, as long as the electrodeposition primer system associated with the paint line you include in the grouping under paragraph (b) of this section meets the operating limits of § 63.3092(a) or (b). Alternatively, you may choose to use one grouping for two of the paint lines and a separate grouping of the same type for the third paint line. Again, each electrodeposition primer system associated with each paint line you include in a grouping under paragraph (b) of this section must meet the operating limits of § 63.3092(a) or (b).

(4) You may choose to consider the electrodeposition primer, primer-surfacer, topcoat, final repair, glass bonding primer, and glass bonding adhesive operations from each of your paint lines as a separate grouping under either paragraph (a) or paragraph (b) of this section. The electrodeposition primer system associated with each paint line you choose to consider in a grouping under paragraph (b) of this section must meet the operating limits of § 63.3092(a) or (b). For example, if your facility has two paint lines, you may choose to use the grouping under paragraph (a) of this section for one paint line and the grouping under paragraph (b) of this section for the other paint line.

§ 63.3092 How must I control emissions from my electrodeposition primer system if I want to comply with the combined primer-surfacer, topcoat, final repair, glass bonding primer, and glass bonding adhesive emission limit?

If your electrodeposition primer system meets the requirements of either paragraph (a) or (b) of this section, you may choose to comply with the emission limits of § 63.3090(b) or § 63.3091(b)

sfrattini on LAPJZKW1R2 with $$_JOB
VerDate Sep<11>2014 09:16 Apr 04, 2023 Jkt 256165 PO 00000 Frm 00574 Fmt 8010 Sfmt 8010 Q:\40\256165.XXX PC31

instead of the emission limits of § 63.3090(a) or § 63.3091(a).

(a) Each individual material added to the electrodeposition primer system contains no more than:

(1) 1.0 percent by weight of any organic HAP; and

(b) Emissions from all bake ovens used to cure electrodeposition primers must be captured and ducted to a control device having a destruction or removal efficiency of at least 95 percent.

[69 FR 22623, Apr. 26, 2004, as amended at 85 FR 41124, July 8, 2020]

§ 63.3093 What operating limits must I meet?

(a) You are not required to meet any operating limits for any coating operation(s) without add-on controls, nor are you required to meet operating limits for any coating operation(s) that do not utilize emission capture systems and add-on controls to comply with the emission limits in § 63.3090 or § 63.3091.

(b) Except as provided in paragraph (d) of this section, for any controlled coating operation(s), you must meet the operating limits specified in table 1 to this subpart. These operating limits apply to the emission capture and add-on control systems on the coating operation(s) for which you use this option, and you must establish the operating limits during performance tests according to the requirements in § 63.3167. You must meet the operating limits at all times after you establish them.

(c) If you choose to meet the emission limitations of § 63.3092(b) and the emission limits of § 63.3090(b) or § 63.3091(b), then except as provided in paragraph (d) of this section, you must operate the capture system and add-on control device used to capture and control emissions from your electrodeposition primer bake oven(s) so that they meet the operating limits specified in Table 1 to this subpart.

(d) If you use an add-on control device other than those listed in Table 1 to this subpart, or wish to monitor an alternative parameter and comply with a different operating limit, you must apply to the Administrator for approval of alternative monitoring under § 63.8(f).

[69 FR 22623, Apr. 26, 2004, as amended at 85 FR 41125, July 8, 2020]

§ 63.3094 What work practice standards must I meet?

(a) [Reserved]

(b) You must develop and implement a work practice plan to minimize organic HAP emissions from the storage, mixing, and conveying of coatings, thinners, and cleaning materials used in, and waste materials generated by, all coating operations for which emission limits are established under § 63.3090(a) through (d) or § 63.3091(a) through (d). The plan must specify practices and procedures to ensure that, at a minimum, the elements specified in paragraphs (b)(1) through (5) of this section are implemented.

(1) All organic-HAP-containing coatings, thinners, cleaning materials, and waste materials must be stored in closed containers.

(2) The risk of spills of organic-HAP-containing coatings, thinners, cleaning materials, and waste materials must be minimized.

(3) Organic-HAP-containing coatings, thinners, cleaning materials, and waste materials must be conveyed from one location to another in closed containers or pipes.

(4) Mixing vessels, other than day tanks equipped with continuous agitation systems, which contain organic-HAP-containing coatings and other materials must be closed except when adding to, removing, or mixing the contents.

(5) Emissions of organic HAP must be minimized during cleaning of storage, mixing, and conveying equipment.

(c) You must develop and implement a work practice plan to minimize organic HAP emissions from cleaning and from purging of equipment associated with all coating operations for which emission limits are established under § 63.3090(a) through (d) or § 63.3091(a) through (d).

(1) The plan shall, at a minimum, address each of the operations listed in paragraphs (c)(1)(i) through (viii) of this section in which you use organic-HAP-containing materials or in which

sfrattini on LAPJZKW1R2 with $$_JOB
VerDate Sep<11>2014 09:16 Apr 04, 2023 Jkt 256165 PO 00000 Frm 00575 Fmt 8010 Sfmt 8010 Q:\40\256165.XXX PC31

there is a potential for emission of organic HAP.

(i) The plan must address vehicle body wipe emissions through one or more of the techniques listed in paragraphs (c)(1)(i)(A) through (E) of this section, or an approved alternative.

(A) Use of solvent-moistened wipes.

(B) Keeping solvent containers closed when not in use.

(C) Keeping wipe disposal/recovery containers closed when not in use.

(D) Use of tack-wipes.

(E) Use of solvents containing less than 1 percent organic HAP by weight.

(ii) The plan must address coating line purging emissions through one or more of the techniques listed in paragraphs (c)(1)(ii)(A) through (D) of this section, or an approved alternative.

(A) Air/solvent push-out.

(B) Capture and reclaim or recovery of purge materials (excluding applicator nozzles/tips).

(C) Block painting to the maximum extent feasible.

(D) Use of low-HAP or no-HAP solvents for purge.

(iii) The plan must address emissions from flushing of coating systems through one or more of the techniques listed in paragraphs (c)(1)(iii)(A) through (D) of this section, or an approved alternative.

(A) Keeping solvent tanks closed.

(B) Recovering and recycling solvents.

(C) Keeping recovered/recycled solvent tanks closed.

(D) Use of low-HAP or no-HAP solvents.

(iv) The plan must address emissions from cleaning of spray booth grates through one or more of the techniques listed in paragraphs (c)(1)(iv)(A) through (E) of this section, or an approved alternative.

(A) Controlled burn-off.

(B) Rinsing with high-pressure water (in place).

(C) Rinsing with high-pressure water (off line).

(D) Use of spray-on masking or other type of liquid masking.

(E) Use of low-HAP or no-HAP content cleaners.

(v) The plan must address emissions from cleaning of spray booth walls through one or more of the techniques listed in paragraphs (c)(1)(v)(A) through (E) of this section, or an approved alternative.

(A) Use of masking materials (contact paper, plastic sheet, or other similar type of material).

(B) Use of spray-on masking.

(C) Use of rags and manual wipes instead of spray application when cleaning walls.

(D) Use of low-HAP or no-HAP content cleaners.

(E) Controlled access to cleaning solvents.

(vi) The plan must address emissions from cleaning of spray booth equipment through one or more of the techniques listed in paragraphs (c)(1)(vi)(A) through (E) of this section, or an approved alternative.

(A) Use of covers on equipment (disposable or reusable).

(B) Use of parts cleaners (off-line submersion cleaning).

(C) Use of spray-on masking or other protective coatings.

(D) Use of low-HAP or no-HAP content cleaners.

(E) Controlled access to cleaning solvents.

(vii) The plan must address emissions from cleaning of external spray booth areas through one or more of the techniques listed in paragraphs (c)(1)(vii)(A) through (F) of this section, or an approved alternative.

(A) Use of removable floor coverings (paper, foil, plastic, or similar type of material).

(B) Use of manual and/or mechanical scrubbers, rags, or wipes instead of spray application.

(C) Use of shoe cleaners to eliminate coating track-out from spray booths.

(D) Use of booties or shoe wraps.

(E) Use of low-HAP or no-HAP content cleaners.

(F) Controlled access to cleaning solvents.

(viii) The plan must address emissions from housekeeping measures not addressed in paragraphs (c)(1)(i) through (vii) of this section through one or more of the techniques listed in paragraphs (c)(1)(viii)(A) through (C) of this section, or an approved alternative.

(A) Keeping solvent-laden articles (cloths, paper, plastic, rags, wipes, and

sfrattini on LAPJZKW1R2 with $$_JOB
VerDate Sep<11>2014 09:16 Apr 04, 2023 Jkt 256165 PO 00000 Frm 00576 Fmt 8010 Sfmt 8010 Q:\40\256165.XXX PC31

similar items) in covered containers when not in use.

(B) Storing new and used solvents in closed containers.

(C) Transferring of solvents in a manner to minimize the risk of spills.

(2) Notwithstanding the requirements of paragraphs (c)(1)(i) through (viii) of this section, if the type of coatings used in any facility with surface coating operations subject to the requirements of this section are of such a nature that the need for one or more of the practices specified under paragraphs (c)(1)(i) through (viii) is eliminated, then the plan may include approved alternative or equivalent measures that are applicable or necessary during cleaning of storage, conveying, and application equipment.

(d) As provided in §63.6(g), we, the Environmental Protection Agency (EPA), may choose to grant you permission to use an alternative to the work practice standards in this section.

(e) The work practice plans developed in accordance with paragraphs (b) and (c) of this section are not required to be incorporated in your title V permit. Any revisions to the work practice plans developed in accordance with paragraphs (b) and (c) of this section do not constitute revisions to your title V permit.

(f) Copies of the current work practice plans developed in accordance with paragraphs (b) and (c) of this section, as well as plans developed within the preceding 5 years must be available onsite for inspection and copying by the permitting authority.

GENERAL COMPLIANCE REQUIREMENTS

§63.3100 What are my general requirements for complying with this subpart?

(a) You must be in compliance with the emission limitations in §§63.3090 and 63.3091 at all times, as determined on a monthly basis.

(b) Before January 5, 2021, the coating operations must be in compliance with the operating limits for emission capture systems and add-on control devices required by §63.3093 at all times except during periods of SSM. On and after January 5, 2021, the coating operations must be in compliance with the operating limits for emission capture systems and add-on control devices required by §63.3093 at all times.

(c) You must be in compliance with the work practice standards in §63.3094 at all times.

(d) Before January 5, 2021, you must always operate and maintain your affected source including all air pollution control and monitoring equipment you use for purposes of complying with this subpart according to the provisions in §63.6(e)(1)(i). On and after January 5, 2021, at all times, the owner or operator must operate and maintain any affected source, including associated air pollution control equipment and monitoring equipment, in a manner consistent with safety and good air pollution control practices for minimizing emissions. The general duty to minimize emissions does not require the owner or operator to make any further efforts to reduce emissions if levels required by the applicable standard have been achieved. Determination of whether a source is operating in compliance with operation and maintenance requirements will be based on information available to the Administrator that may include, but is not limited to, monitoring results, review of operation and maintenance procedures, review of operation and maintenance records, and inspection of the affected source.

(e) You must maintain a log detailing the operation and maintenance of the emission capture systems, add-on control devices, and continuous parameter monitoring systems (CPMS) during the period between the compliance date specified for your affected source in §63.3083 and the date when the initial emission capture system and add-on control device performance tests have been completed, as specified in §63.3160.

(f) Before January 5, 2021, if your affected source uses emission capture systems and add-on control devices, you must develop a written startup, shutdown, and malfunction plan (SSMP) according to the provisions in §63.6(e)(3). The SSMP must address startup, shutdown, and corrective actions in the event of a malfunction of the emission capture system or the add-on control devices. On and after

sfrattini on LAPJZKW1R2 with $$_JOB
VerDate Sep<11>2014 09:16 Apr 04, 2023 Jkt 256165 PO 00000 Frm 00577 Fmt 8010 Sfmt 8010 Q:\40\256165.XXX PC31

January 5, 2021, the SSMP is not required.

[69 FR 22623, Apr. 26, 2004, as amended at 71 FR 20464, Apr. 20, 2006; 85 FR 41125, July 8, 2020]

§ 63.3101 What parts of the General Provisions apply to me?

Table 2 to this subpart shows which parts of the General Provisions in §§ 63.1 through 63.15 apply to you.

NOTIFICATIONS, REPORTS, AND RECORDS

§ 63.3110 What notifications must I submit?

(a) *General.* You must submit the notifications in §§ 63.7(b) and (c), 63.8(f)(4), and 63.9(b) through (e) and (h) that apply to you by the dates specified in those sections, except as provided in paragraphs (b) and (c) of this section.

(b) You must submit the Initial Notification required by § 63.9(b) for a new or reconstructed affected source no later than 120 days after initial startup, 120 days after the source becomes subject to this subpart, or 120 days after June 25, 2004, whichever is later. For an existing affected source, you must submit the Initial Notification no later than 1 year after April 26, 2004, or no later than 120 days after the source becomes subject to this subpart, whichever is later. Existing sources that have previously submitted notifications of applicability of this rule pursuant to section 112(j) of the CAA are not required to submit an Initial Notification under § 63.9(b) except to identify and describe all additions to the affected source made pursuant to § 63.3082(c). If you elect to include the surface coating of new other motor vehicle bodies, body parts for new other motor vehicles, parts for new other motor vehicles, or aftermarket repair or replacement parts for other motor vehicles in your affected source pursuant to § 63.3082(c) and your affected source has an initial startup before February 20, 2007, then you must submit an Initial Notification of this election no later than 120 days after initial startup or February 20, 2007, or no later than 120 days after the source becomes subject to this subpart, whichever is later.

(c) *Notification of compliance status.* If you have an existing source, you must submit the Notification of Compliance Status required by § 63.9(h) no later than 30 days following the end of the initial compliance period described in § 63.3160. If you have a new source, you must submit the Notification of Compliance Status required by § 63.9(h) no later than 60 days after the first day of the first full month following completion of all applicable performance tests. The Notification of Compliance Status must contain the information specified in paragraphs (c)(1) through (12) of this section and in § 63.9(h).

(1) Company name and address.

(2) Statement by a responsible official with that official's name, title, and signature, certifying the truth, accuracy, and completeness of the content of the report.

(3) Date of the report and beginning and ending dates of the reporting period. The reporting period is the initial compliance period described in § 63.3160 that applies to your affected source.

(4) Identification of the compliance option specified in § 63.3090(a) or (b) or § 63.3091(a) or (b) that you used for electrodeposition primer, primer-surfacer, topcoat, final repair, glass bonding primer, and glass bonding adhesive operations plus all coatings and thinners, except for deadener materials and for adhesive and sealer materials that are not components of glass bonding systems, used in coating operations added to the affected source pursuant to § 63.3082(c) in the affected source during the initial compliance period.

(5) Statement of whether or not the affected source achieved the emission limitations for the initial compliance period.

(6) If you had a deviation, include the information in paragraphs (c)(6)(i) and (ii) of this section.

(i) A description and statement of the cause of the deviation.

(ii) If you failed to meet any of the applicable emission limits in § 63.3090 or § 63.3091, include all the calculations you used to determine the applicable emission rate or applicable average organic HAP content for the emission limit(s) that you failed to meet. You do

sfrattini on LAPJZKW1R2 with $$_JOB
VerDate Sep<11>2014 09:16 Apr 04, 2023 Jkt 256165 PO 00000 Frm 00578 Fmt 8010 Sfmt 8010 Q:\40\256165.XXX PC31

not need to submit information provided by the materials suppliers or manufacturers, or test reports.

(7) All data and calculations used to determine the monthly average mass of organic HAP emitted per volume of applied coating solids from:

(i) The combined primer-surfacer, topcoat, final repair, glass bonding primer, and glass bonding adhesive operations plus all coatings and thinners, except for deadener materials and for adhesive and sealer materials that are not components of glass bonding systems, used in coating operations added to the affected source pursuant to §63.3082(c) if you were eligible for and chose to comply with the emission limits of §63.3090(b) or §63.3091(b); or

(ii) The combined electrodeposition primer, primer-surfacer, topcoat, final repair, glass bonding primer, and glass bonding adhesive operations plus all coatings and thinners, except for deadener materials and for adhesive and sealer materials that are not components of glass bonding systems, used in coating operations added to the affected source pursuant to §63.3082(c).

(8) All data and calculations used to determine compliance with the separate limits for electrodeposition primer in §63.3092(a) or (b) if you were eligible for and chose to comply with the emission limits of §63.3090(b) or §63.3091(b).

(9) All data and calculations used to determine the monthly mass average HAP content of materials subject to the emission limits of §63.3090(c) or (d) or the emission limits of §63.3091(c) or (d).

(10) All data and calculations used to determine the transfer efficiency for primer-surfacer and topcoat coatings, and for all coatings, except for deadener and for adhesive and sealer that are not components of glass bonding systems, used in coating operations added to the affected source pursuant to §63.3082(c).

(11) You must include the information specified in paragraphs (c)(11)(i) through (iii) of this section.

(i) For each emission capture system, a summary of the data and copies of the calculations supporting the determination that the emission capture system is a permanent total enclosure (PTE) or a measurement of the emission capture system efficiency. Include a description of the procedure followed for measuring capture efficiency, summaries of any capture efficiency tests conducted, and any calculations supporting the capture efficiency determination. If you use the data quality objective (DQO) or lower confidence limit (LCL) approach, you must also include the statistical calculations to show you meet the DQO or LCL criteria in appendix A to subpart KK of this part. You do not need to submit complete test reports.

(ii) A summary of the results of each add-on control device performance test. You do not need to submit complete test reports unless requested.

(iii) A list of each emission capture system's and add-on control device's operating limits and a summary of the data used to calculate those limits.

(12) A statement of whether or not you developed and implemented the work practice plans required by §63.3094(b) and (c).

[69 FR 22623, Apr. 26, 2004, as amended at 71 FR 76927, Dec. 22, 2006; 85 FR 73904, Nov. 19, 2020]

§63.3120 What reports must I submit?

(a) *Semiannual compliance reports*. You must submit semiannual compliance reports for each affected source according to the requirements of paragraphs (a)(1) through (9) of this section. The semiannual compliance reporting requirements may be satisfied by reports required under other parts of the CAA, as specified in paragraph (a)(2) of this section.

(1) *Dates*. Unless the Administrator has approved a different schedule for submission of reports under §63.10(a), you must prepare and submit each semiannual compliance report according to the dates specified in paragraphs (a)(1)(i) through (iv) of this section.

(i) The first semiannual compliance report must cover the first semiannual reporting period which begins the day after the end of the initial compliance period described in §63.3160 that applies to your affected source and ends on June 30 or December 31, whichever occurs first following the end of the initial compliance period.

sfrattini on LAPJZKW1R2 with $$_JOB
VerDate Sep<11>2014 09:16 Apr 04, 2023 Jkt 256165 PO 00000 Frm 00579 Fmt 8010 Sfmt 8010 Q:\40\256165.XXX PC31

(ii) Each subsequent semiannual compliance report must cover the subsequent semiannual reporting period from January 1 through June 30 or the semiannual reporting period from July 1 through December 31.

(iii) Each semiannual compliance report must be postmarked or delivered no later than July 31 or January 31, whichever date is the first date following the end of the semiannual reporting period.

(iv) For each affected source that is subject to permitting regulations pursuant to 40 CFR part 70 or 40 CFR part 71, and if the permitting authority has established dates for submitting semiannual reports pursuant to 40 CFR 70.6(a)(3)(iii)(A) or 40 CFR 71.6(a)(3)(iii)(A), you may submit the first and subsequent compliance reports according to the dates the permitting authority has established instead of according to the date specified in paragraph (a)(1)(iii) of this section.

(2) *Inclusion with title V report.* If you have obtained a title V operating permit pursuant to 40 CFR part 70 or 40 CFR part 71, you must report all deviations as defined in this subpart in the semiannual monitoring report required by 40 CFR 70.6(a)(3)(iii)(A) or 40 CFR 71.6(a)(3)(iii)(A). If you submit a semiannual compliance report pursuant to this section along with, or as part of, the semiannual monitoring report required by 40 CFR 70.6(a)(3)(iii)(A) or 40 CFR 71.6(a)(3)(iii)(A), and the semiannual compliance report includes all required information concerning deviations from any emission limit, operating limit, or work practice in this subpart, its submission shall be deemed to satisfy any obligation to report the same deviations in the semiannual monitoring report. However, submission of a semiannual compliance report shall not otherwise affect any obligation you may have to report deviations from permit requirements to the permitting authority.

(3) *General requirements.* The semiannual compliance report must contain the information specified in paragraphs (a)(3)(i) through (iv) of this section, and the information specified in paragraphs (a)(4) through (9) and (c)(1) of this section that are applicable to your affected source.

(i) Company name and address.

(ii) Statement by a responsible official with that official's name, title, and signature, certifying the truth, accuracy, and completeness of the content of the report.

(iii) Date of report and beginning and ending dates of the reporting period. The reporting period is the 6-month period ending on June 30 or December 31.

(iv) Identification of the compliance option specified in § 63.3090(b) or § 63.3091(b) that you used for electrodeposition primer, primer-surfacer, topcoat, final repair, glass bonding primer, and glass bonding adhesive operations plus all coatings and thinners, except for deadener materials and for adhesive and sealer materials that are not components of glass bonding systems, used in coating operations added to the affected source pursuant to § 63.3082(c) in the affected source during the initial compliance period.

(4) *No deviations.* If there were no deviations from the emission limits, operating limits, or work practices in §§ 63.3090, 63.3091, 63.3092, 63.3093, and 63.3094 that apply to you, the semiannual compliance report must include a statement that there were no deviations from the applicable emission limitations during the reporting period. If you used control devices to comply with the emission limits, and there were no periods during which the CPMS were out of control as specified in § 63.8(c)(7), the semiannual compliance report must include a statement that there were no periods during which the CPMS were out of control during the reporting period.

(5) *Deviations: adhesive, sealer, and deadener.* Before January 5, 2021, if there was a deviation from the applicable emission limits in § 63.3090(c) and (d) or § 63.3091(c) and (d), the semiannual compliance report must contain the information in paragraphs (a)(5)(i) through (iv) of this section. On and after January 5, 2021, if there was a deviation from the applicable emission limits in § 63.3090(c) and (d) or § 63.3091(c) and (d), the semiannual compliance report must contain the information in paragraphs (a)(5)(i) through (v) of this section.

(i) The beginning and ending dates of each month during which the monthly

sfrattini on LAPJZKW1R2 with $$_JOB
VerDate Sep<11>2014 09:16 Apr 04, 2023 Jkt 256165 PO 00000 Frm 00580 Fmt 8010 Sfmt 8010 Q:\40\256165.XXX PC31

average organic HAP content exceeded the applicable emission limit in §63.3090(c) and (d) or §63.3091(c) and (d).

(ii) The volume and organic HAP content of each material used that is subject to the applicable organic HAP content limit.

(iii) The calculation used to determine the average monthly organic HAP content for the month in which the deviation occurred.

(iv) The reason for the deviation (including unknown cause, if applicable).

(v) On and after January 5, 2021, the number of deviations and, for each deviation, a list of the affected source or equipment, an estimate of the quantity of each regulated pollutant emitted over the applicable emission limit in §63.3090(c) and (d) or §63.3091(c) and (d), and a description of the method used to estimate the emissions.

(6) *Deviations:* combined electrodeposition primer, primer-surfacer, topcoat, final repair, glass bonding primer and glass bonding adhesive, or combined primer-surfacer, topcoat, final repair, glass bonding primer, and glass bonding adhesive plus all coatings and thinners, except for deadener materials and for adhesive and sealer materials that are not components of glass bonding systems, used in coating operations added to the affected source pursuant to §63.3082(c). Before January 5, 2021, if there was a deviation from the applicable emission limits in §63.3090(a) or (b) or §63.3091(a) or (b) or the applicable operating limit(s) in table 1 to this subpart, the semiannual compliance report must contain the information in paragraphs (a)(6)(i) through (xiv) of this section. On and after January 5, 2021, if there was a deviation from the applicable emission limits in §63.3090(a) or (b) or §63.3091(a) or (b) or the applicable operating limit(s) in table 1 to this subpart, the semiannual compliance report must contain the information in paragraphs (a)(6)(i) through (xv) of this section.

(i) The beginning and ending dates of each month during which the monthly organic HAP emission rate from combined electrodeposition primer, primer-surfacer, topcoat, final repair, glass bonding primer, and glass bonding adhesive plus all coatings and thinners, except for deadener materials and for adhesive and sealer materials that are not components of glass bonding systems, used in coating operations added to the affected source pursuant to §63.3082(c) exceeded the applicable emission limit in §63.3090(a) or §63.3091(a); or the monthly organic HAP emission rate from combined primer-surfacer, topcoat, final repair, glass bonding primer, and glass bonding adhesive plus all coatings and thinners, except for deadener materials and for adhesive and sealer materials that are not components of glass bonding systems, used in coating operations added to the affected source pursuant to §63.3082(c) exceeded the applicable emission limit in §63.3090(b) or §63.3091(b).

(ii) The calculation used to determine the monthly organic HAP emission rate in accordance with §63.3161 or §63.3171. You do not need to submit the background data supporting these calculations, for example information provided by materials suppliers or manufacturers, or test reports.

(iii) The date and time that each malfunction of the capture system or add-on control devices used to control emissions from these operations started and stopped.

(iv) A brief description of the CPMS.

(v) The date of the latest CPMS certification or audit.

(vi) Before January 5, 2021, the date and time that each CPMS was inoperative, except for zero (low-level) and high-level checks. On and after January 5, 2021, for each instance that the CPMS was inoperative, except for zero (low-level) and high-level checks, the date, time, and duration that the CPMS was inoperative; the cause (including unknown cause) for the CPMS being inoperative; and descriptions of corrective actions taken.

(vii) Before January 5, 2021, the date and time period that each CPMS was out of control, including the information in §63.8(c)(8). On and after January 5, 2021, for each instance that the CPMS was out of control, as specified in §63.8(c)(7), the date, time, and duration that the CPMS was out-of-control; the cause (including unknown cause) for the CPMS being out-of-control; and descriptions of corrective actions taken.

sfrattini on LAPJZKW1R2 with $$_JOB
VerDate Sep<11>2014 09:16 Apr 04, 2023 Jkt 256165 PO 00000 Frm 00581 Fmt 8010 Sfmt 8010 Q:\40\256165.XXX PC31

(viii) Before January 5, 2021, The date and time period of each deviation from an operating limit in table 1 to this subpart; date and time period of each bypass of an add-on control device; and whether each deviation occurred during a period of SSM or during another period. On and after January 5, 2021, the date, time, and duration of each deviation from an operating limit in table 1 to this subpart; and the date, time, and duration of each bypass of an add-on control device.

(ix) A summary of the total duration and the percent of the total source operating time of the deviations from each operating limit in Table 1 to this subpart and the bypass of each add-on control device during the semiannual reporting period.

(x) Before January 5, 2021, a breakdown of the total duration of the deviations from each operating limit in table 1 to this subpart and bypasses of each add-on control device during the semiannual reporting period into those that were due to startup, shutdown, control equipment problems, process problems, other known causes, and other unknown causes. On and after January 5, 2021, a breakdown of the total duration of the deviations from each operating limit in table 1 to this subpart and bypasses of each add-on control device during the semiannual reporting period into those that were due to control equipment problems, process problems, other known causes, and other unknown causes.

(xi) A summary of the total duration and the percent of the total source operating time of the downtime for each CPMS during the semiannual reporting period.

(xii) A description of any changes in the CPMS, coating operation, emission capture system, or add-on control devices since the last semiannual reporting period.

(xiii) Before January 5, 2021, for each deviation from the work practice standards a description of the deviation, the date and time period of the deviation, and the actions you took to correct the deviation. On and after January 5, 2021, for deviations from the work practice standards, the number of deviations, and, for each deviation, the information in paragraphs (a)(6)(xiii)(A) and (B) of this section.

(A) A description of the deviation, the date, time, and duration of the deviation; and the actions you took to minimize emissions in accordance with § 63.3100(d).

(B) A list of the affected sources or equipment for which a deviation occurred, the cause of the deviation (including unknown cause, if applicable), and any corrective actions taken to return the affected unit to its normal or usual manner of operation.

(xiv) Before January 5, 2021, a statement of the cause of each deviation. On and after January 5, 2021, for deviations from an emission limitation in § 63.3090(a) or (b) or § 63.3091(a) or (b) or operating limit in table 1 of this subpart, a statement of the cause of each deviation (including unknown cause, if applicable).

(xv) On and after January 5, 2021, for each deviation from an emission limitation in § 63.3090(a) or (b), or § 63.3091(a) or (b), or operating limit in table 1 to this subpart, a list of the affected sources or equipment for which a deviation occurred, an estimate of the quantity of each regulated pollutant emitted over any emission limit in § 63.3090(a) or (b) or § 63.3091(a) or (b), and a description of the method used to estimate the emissions.

(7) *Deviations: Separate electrodeposition primer organic HAP content limit.* Before January 5, 2021, if you used the separate electrodeposition primer organic HAP content limits in § 63.3092(a), and there was a deviation from these limits, the semiannual compliance report must contain the information in paragraphs (a)(7)(i) through (iii) of this section. On and after January 5, 2021, if you used the separate electrodeposition primer organic HAP content limits in § 63.3092(a), and there was a deviation from these limits, the semiannual compliance report must contain the information in paragraphs (a)(7)(i) through (iv) of this section.

(i) Identification of each material used that deviated from the emission limit, and the date, time, and duration each was used.

(ii) The determination of mass fraction of each organic HAP for each material identified in paragraph (a)(7)(i)

sfrattini on LAPJZKW1R2 with $$_JOB
VerDate Sep<11>2014 09:16 Apr 04, 2023 Jkt 256165 PO 00000 Frm 00582 Fmt 8010 Sfmt 8010 Q:\40\256165.XXX PC31

of this section. You do not need to submit background data supporting this calculation, for example, information provided by material suppliers or manufacturers, or test reports.

(iii) A statement of the cause of each deviation (including unknown case, if applicable).

(iv) On and after January 5, 2021, the number of deviations, a list of the affected source or equipment, an estimate of the quantity of each regulated pollutant emitted over any emission limit in §63.3092(a), and a description of the method used to estimate the emissions.

(8) *Deviations: Separate electrodeposition primer bake oven capture and control limitations.* Before January 5, 2021, if you used the separate electrodeposition primer bake oven capture and control limitations in §63.3092(b), and there was a deviation from the limitations in §63.3092(b) or the applicable operating limit in table 1 to this subpart, the semiannual compliance report must contain the information in paragraphs (a)(8)(i) through (xii) of this section. On and after January 5, 2021, if you used the separate electrodeposition primer bake oven capture and control limitations in §63.3092(b), and there was a deviation from the limitations in §63.3092(b) or the applicable operating limit in table 1 to this subpart, the semiannual compliance report must contain the information in paragraphs (a)(8)(i) through (xiv) of this section.

(i) The beginning and ending dates of each month during which there was a deviation from the separate electrodeposition primer bake oven capture and control limitations in §63.3092(b).

(ii) The date and time that each malfunction of the capture systems or control devices used to control emissions from the electrodeposition primer bake oven started and stopped.

(iii) A brief description of the CPMS.

(iv) The date of the latest CPMS certification or audit.

(v) Before January 5, 2021, the date and time that each CPMS was inoperative, except for zero (low-level) and high-level checks. On and after January 5, 2021, for each instance that the CPMS was inoperative, except for zero (low-level) and high-level checks, the date, time, and duration that the CPMS was inoperative; the cause (including unknown cause) for the CPMS being inoperative; and descriptions of corrective actions taken.

(vi) Before January 5, 2021, the date, time, and duration that each CPMS was out of control, including the information in §63.8(c)(8). On and after January 5, 2021, for each instance that the CPMS was out of control, as specified in §63.8(c)(7), the date, time, and duration that the CPMS was out-of-control; the cause (including unknown cause) for the CPMS being out-of-control; and descriptions of corrective actions taken.

(vii) Before January 5, 2021, the date and time period of each deviation from an operating limit in table 1 to this subpart; date and time period of each bypass of an add-on control device; and whether each deviation occurred during a period of SSM or during another period. On and after January 5, 2021, the date, time, and duration of each deviation from an operating limit in table 1 to this subpart; and the date, time, and duration of each bypass of an add-on control device.

(viii) A summary of the total duration and the percent of the total source operating time of the deviations from each operating limit in Table 1 to this subpart and the bypasses of each add-on control device during the semiannual reporting period.

(ix) Before January 5, 2021, a breakdown of the total duration of the deviations from each operating limit in table 1 to this subpart and bypasses of each add-on control device during the semiannual reporting period into those that were due to startup, shutdown, control equipment problems, process problems, other known causes, and other unknown causes. On and after January 5, 2021, a breakdown of the total duration of the deviations from each operating limit in table 1 to this subpart and bypasses of each add-on control device during the semiannual reporting period into those that were due to control equipment problems, process problems, other known causes, and other unknown causes.

sfrattini on LAPJZKW1R2 with $$_JOB
VerDate Sep<11>2014 09:16 Apr 04, 2023 Jkt 256165 PO 00000 Frm 00583 Fmt 8010 Sfmt 8010 Q:\40\256165.XXX PC31

(x) A summary of the total duration and the percent of the total source operating time of the downtime for each CPMS during the semiannual reporting period.

(xi) A description of any changes in the CPMS, coating operation, emission capture system, or add-on control devices since the last semiannual reporting period.

(xii) A statement of the cause of each deviation (including unknown cause, if applicable).

(9) *Deviations: Work practice plans.* Before January 5, 2021, if there was a deviation from an applicable work practice plan developed in accordance with § 63.3094(b) or (c), the semiannual compliance report must contain the information in paragraphs (a)(9)(i) through (iii) of this section. On and after January 5, 2021, if there were deviations from an applicable work practice plan developed in accordance with § 63.3094(b) or (c), the semiannual compliance report must contain the number of deviations, and, for each deviation, the information in paragraphs (a)(9)(i) through (iii) of this section.

(i) Before January 5, 2021, the time period during which each deviation occurred. On and after January 5, 2021, the date, time, and duration of the deviation.

(ii) Before January 5, 2021, the nature of each deviation. On and after January 5, 2021, the nature of the deviation, including a list of the affected sources or equipment for which the deviation occurred, and the cause of the deviation (including unknown cause, if applicable).

(iii) The corrective action(s) taken to bring the applicable work practices into compliance with the work practice plan.

(b) *Performance test reports.* If you use add-on control devices, you must submit reports of performance test results for emission capture systems and add-on control devices no later than 60 days after completing the tests as specified in § 63.10(d)(2). You must submit reports of transfer efficiency tests no later than 60 days after completing the tests as specified in § 63.10(d)(2).

(c) *SSM reports.* Before January 5, 2021, if you used add-on control devices and you had a SSM during the semiannual reporting period, you must submit the reports specified in paragraphs (c)(1) and (2) of this section. On and after January 5, 2021, the reports specified in paragraphs (c)(1) and (2) of this section are not required.

(1) If your actions were consistent with your SSMP, you must include the information specified in § 63.10(d) in the semiannual compliance report required by paragraph (a) of this section.

(2) If your actions were not consistent with your SSMP, you must submit an immediate startup, shutdown, and malfunction report as described in paragraphs (c)(2)(i) and (ii) of this section.

(i) You must describe the actions taken during the event in a report delivered by facsimile, telephone, or other means to the Administrator within 2 working days after starting actions that are inconsistent with the plan.

(ii) You must submit a letter to the Administrator within 7 working days after the end of the event, unless you have made alternative arrangements with the Administrator as specified in § 63.10(d)(5)(ii). The letter must contain the information specified in § 63.10(d)(5)(ii).

(d) *Performance test reports.* On and after January 5, 2021, you must submit the results of the performance test required in paragraph (b) of this section following the procedure specified in paragraphs (d)(1) through (3) of this section.

(1) For data collected using test methods supported by the EPA's Electronic Reporting Tool (ERT) as listed on the EPA's ERT website (*https://www.epa.gov/electronic-reporting-air-emissions/electronic-reporting-tool-ert*) at the time of the test, you must submit the results of the performance test to the EPA via the Compliance and Emissions Data Reporting Interface (CEDRI). (CEDRI can be accessed through the EPA's Central Data Exchange (CDX) (*https://cdx.epa.gov/*)). Performance test data must be submitted in a file format generated through the use of the EPA's ERT or an alternate electronic file format consistent with the extensible markup language (XML) schema listed on the EPA's ERT website.

sfrattini on LAPJZKW1R2 with $$_JOB
VerDate Sep<11>2014 09:16 Apr 04, 2023 Jkt 256165 PO 00000 Frm 00584 Fmt 8010 Sfmt 8010 Q:\40\256165.XXX PC31

(2) For data collected using test methods that are not supported by the EPA's ERT as listed on the EPA's ERT website at the time of the test, you must submit the results of the performance test to the Administrator at the appropriate address listed in §63.13, unless the Administrator agrees to or specifies an alternate reporting method.

(3) If you claim that some of the performance test information being submitted under paragraph (c)(1) of this section is Confidential Business Information (CBI), you must submit a complete file generated through the use of the EPA's ERT or an alternate electronic file consistent with the XML schema listed on the EPA's ERT website, including information claimed to be CBI, on a compact disc, flash drive, or other commonly used electronic storage medium to the EPA. The electronic medium must be clearly marked as CBI and mailed to U.S. EPA/OAPQS/CORE CBI Office, Attention: Group Leader, Measurement Policy Group, MD C404–02, 4930 Old Page Rd., Durham, NC 27703. The same ERT or alternate file with the CBI omitted must be submitted to the EPA via the EPA's CDX as described in paragraph (c)(1) of this section.

(e) *Initial notification reports.* On and after January 5, 2021, the owner or operator shall submit the initial notifications required in §63.9(b) and the notification of compliance status required in §§63.9(h) and 63.3110(c) to the EPA via the CEDRI. The CEDRI interface can be accessed through the EPA's CDX (*https://cdx.epa.gov/*). The owner or operator must upload to CEDRI an electronic copy of each applicable notification in portable document format (PDF). The applicable notification must be submitted by the deadline specified in this subpart, regardless of the method in which the reports are submitted. Owners or operators who claim that some of the information required to be submitted via CEDRI is CBI shall submit a complete report generated using the appropriate form in CEDRI or an alternate electronic file consistent with the XML schema listed on the EPA's CEDRI website, including information claimed to be CBI, on a compact disc, flash drive, or other commonly used electronic storage medium to the EPA. The electronic medium shall be clearly marked as CBI and mailed to U.S. EPA/OAQPS/CORE CBI Office, Attention: Group Leader, Measurement Policy Group, MD C404–02, 4930 Old Page Rd., Durham, NC 27703. The same file with the CBI omitted shall be submitted to the EPA via the EPA's CDX as described earlier in this paragraph.

(f) *Semiannual compliance reports.* On and after January 5, 2021, or once the reporting template has been available on the CEDRI website for 1 year, whichever date is later, the owner or operator shall submit the semiannual compliance report required in paragraph (a) of this section to the EPA via the CEDRI. The CEDRI interface can be accessed through the EPA's CDX (*https://cdx.epa.gov/*). The owner or operator must use the appropriate electronic template on the CEDRI Web for this subpart or an alternate electronic file format consistent with the XML schema listed on the CEDRI website (*https://www.epa.gov/electronic-reporting-air-emissions/compliance-and-emissions-data-reporting-interface-cedri*). If the reporting form for the semiannual compliance report specific to this subpart is not available in CEDRI at the time that the report is due, you must submit the report to the Administrator at the appropriate addresses listed in §63.13. Once the form has been available in CEDRI for 1 year, you must begin submitting all subsequent reports via CEDRI. The reports must be submitted by the deadlines specified in this subpart, regardless of the method in which the reports are submitted. Owners or operators who claim that some of the information required to be submitted via CEDRI is CBI shall submit a complete report generated using the appropriate form in CEDRI or an alternate electronic file consistent with the XML schema listed on the EPA's CEDRI website, including information claimed to be CBI, on a compact disc, flash drive, or other commonly used electronic storage medium to the EPA. The electronic medium shall be clearly marked as CBI and mailed to U.S. EPA/OAQPS/CORE CBI Office, Attention: Group Leader, Measurement Policy Group, MD C404–02, 4930 Old Page Rd.,

sfrattini on LAPJZKW1R2 with $$_JOB
VerDate Sep<11>2014 09:16 Apr 04, 2023 Jkt 256165 PO 00000 Frm 00585 Fmt 8010 Sfmt 8010 Q:\40\256165.XXX PC31

Durham, NC 27703. The same file with the CBI omitted shall be submitted to the EPA via the EPA's CDX as described earlier in this paragraph.

(g) *Reporting during EPA system outages.* If you are required to electronically submit a report through the CEDRI in the EPA's CDX, and due to a planned or actual outage of either the EPA's CEDRI or CDX systems within the period of time beginning 5 business days prior to the date that the submission is due, you will be or are precluded from accessing CEDRI or CDX and submitting a required report within the time prescribed, you may assert a claim of the EPA system outage for failure to timely comply with the reporting requirement. You must submit notification to the Administrator in writing as soon as possible following the date you first knew, or through due diligence should have known, that the event may cause or caused a delay in reporting. You must provide to the Administrator a written description identifying the date, time and length of the outage; a rationale for attributing the delay in reporting beyond the regulatory deadline to the EPA system outage; describe the measures taken or to be taken to minimize the delay in reporting; and identify a date by which you propose to report, or if you have already met the reporting requirement at the time of the notification, the date you reported. In any circumstance, the report must be submitted electronically as soon as possible after the outage is resolved. The decision to accept the claim of the EPA system outage and allow an extension to the reporting deadline is solely within the discretion of the Administrator.

(h) *Reporting during force majeure events.* If you are required to electronically submit a report through CEDRI in the EPA's CDX and a force majeure event is about to occur, occurs, or has occurred or there are lingering effects from such an event within the period of time beginning 5 business days prior to the date the submission is due, the owner or operator may assert a claim of force majeure for failure to timely comply with the reporting requirement. For the purposes of this section, a force majeure event is defined as an event that will be or has been caused by circumstances beyond the control of the affected facility, its contractors, or any entity controlled by the affected facility that prevents you from complying with the requirement to submit a report electronically within the time period prescribed. Examples of such events are acts of nature (*e.g.*, hurricanes, earthquakes, or floods), acts of war or terrorism, or equipment failure or safety hazard beyond the control of the affected facility (*e.g.*, large scale power outage). If you intend to assert a claim of force majeure, you must submit notification to the Administrator in writing as soon as possible following the date you first knew, or through due diligence should have known, that the event may cause or caused a delay in reporting. You must provide to the Administrator a written description of the force majeure event and a rationale for attributing the delay in reporting beyond the regulatory deadline to the force majeure event; describe the measures taken or to be taken to minimize the delay in reporting; and identify a date by which you propose to report, or if you have already met the reporting requirement at the time of the notification, the date you reported. In any circumstance, the reporting must occur as soon as possible after the force majeure event occurs. The decision to accept the claim of force majeure and allow an extension to the reporting deadline is solely within the discretion of the Administrator.

[69 FR 22623, Apr. 26, 2004, as amended at 85 FR 41125, July 8, 2020]

§ 63.3130 What records must I keep?

You must collect and keep records of the data and information specified in this section. Failure to collect and keep these records is a deviation from the applicable standard.

(a) A copy of each notification and report that you submitted to comply with this subpart, and the documentation supporting each notification and report.

(b) A current copy of information provided by materials suppliers or manufacturers, such as manufacturer's formulation data, or test data used to determine the mass fraction of organic

sfrattini on LAPJZKW1R2 with $$_JOB
VerDate Sep<11>2014 09:16 Apr 04, 2023 Jkt 256165 PO 00000 Frm 00586 Fmt 8010 Sfmt 8010 Q:\40\256165.XXX PC31

HAP, the density and the volume fraction of coating solids for each coating, the mass fraction of organic HAP and the density for each thinner, and the mass fraction of organic HAP for each cleaning material. If you conducted testing to determine mass fraction of organic HAP, density, or volume fraction of coating solids, you must keep a copy of the complete test report. If you use information provided to you by the manufacturer or supplier of the material that was based on testing, you must keep the summary sheet of results provided to you by the manufacturer or supplier. If you use the results of an analysis conducted by an outside testing lab, you must keep a copy of the test report. You are not required to obtain the test report or other supporting documentation from the manufacturer or supplier.

(c) For each month, the records specified in paragraphs (c)(1) through (6) of this section.

(1) For each coating used for electrodeposition primer, primer-surfacer, topcoat, final repair, glass bonding primer, and glass bonding adhesive operations and for each coating, except for deadener and for adhesive and sealer that are not components of glass bonding systems, used in coating operations added to the affected source pursuant to §63.3082(c), a record of the volume used in each month, the mass fraction organic HAP content, the density, and the volume fraction of solids.

(2) For each thinner used for electrodeposition primer, primer-surfacer, topcoat, final repair, glass bonding primer, and glass bonding adhesive operations and for each thinner, except for thinner used for deadener and for adhesive and sealer that are not components of glass bonding systems, used in coating operations added to the affected source pursuant to §63.3082(c), a record of the volume used in each month, the mass fraction organic HAP content, and the density.

(3) For each deadener material and for each adhesive and sealer material, a record of the mass used in each month and the mass organic HAP content.

(4) A record of the calculation of the organic HAP emission rate for electrodeposition primer, primer-surfacer, topcoat, final repair, glass bonding primer, and glass bonding adhesive plus all coatings and thinners, except for deadener materials and for adhesive and sealer materials that are not components of glass bonding systems, used in coating operations added to the affected source pursuant to §63.3082(c) for each month if subject to the emission limit of §63.3090(a) or §63.3091(a). This record must include all raw data, algorithms, and intermediate calculations. If the guidelines presented in the ''Protocol for Determining the Daily Volatile Organic Compound Emission Rate of Automobile and Light-Duty Truck Primer-Surfacer and Topcoat'' EPA–453/R–08–002 (incorporated by reference, *see* §63.14), are used, you must keep records of all data input to this protocol. If these data are maintained as electronic files, the electronic files, as well as any paper copies must be maintained. These data must be provided to the permitting authority on request on paper, and in (if calculations are done electronically) electronic form.

(5) A record of the calculation of the organic HAP emission rate for primer-surfacer, topcoat, final repair, glass bonding primer, and glass bonding adhesive plus all coatings and thinners, except for deadener materials and for adhesive and sealer materials that are not components of glass bonding systems, used in coating operations added to the affected source pursuant to §63.3082(c) for each month if subject to the emission limit of §63.3090(b) or §63.3091(b), and a record of the weight fraction of each organic HAP in each material added to the electrodeposition primer system if subject to the limitations of §63.3092(a). This record must include all raw data, algorithms, and intermediate calculations. If the guidelines presented in the ''Protocol for Determining the Daily Volatile Organic Compound Emission Rate of Automobile and Light-Duty Truck Primer-Surfacer and Topcoat'' EPA–453/R–08–002 (incorporated by reference, *see* §63.14), are used, you must keep records of all data input to this protocol. If these data are maintained as electronic files, the electronic files, as well as any paper copies must be maintained. These data must be provided to the

sfrattini on LAPJZKW1R2 with $$_JOB
VerDate Sep<11>2014 09:16 Apr 04, 2023 Jkt 256165 PO 00000 Frm 00587 Fmt 8010 Sfmt 8010 Q:\40\256165.XXX PC31

permitting authority on request on paper, and in (if calculations are done electronically) electronic form.

(6) A record, for each month, of the calculation of the average monthly mass organic HAP content of:

(i) Sealers and adhesives; and

(ii) Deadeners.

(d) A record of the name and volume of each cleaning material used during each month.

(e) A record of the mass fraction of organic HAP for each cleaning material used during each month.

(f) A record of the density for each cleaning material used during each month.

(g) Before January 5, 2021, a record of the date, time, and duration of each deviation, and for each deviation, a record of whether the deviation occurred during a period of SSM. On and after January 5, 2021, for each deviation from an emission limitation, operating limit, or work practice plan reported under § 63.3120(a)(5) through (9), a record of the information specified in paragraphs (g)(1) through (4) of this section, as applicable.

(1) The date, time, and duration of the deviation, and for each deviation, the information as reported under § 63.3120(a)(5) through (9).

(2) A list of the affected sources or equipment for which the deviation occurred and the cause of the deviation, as reported under § 63.3120(a)(5) through (9).

(3) An estimate of the quantity of each regulated pollutant emitted over any applicable emission limit in § 63.3090(a) through (d) or § 63.3091(a) through (d) or any applicable operating limit in table 1 to this subpart, and a description of the method used to calculate the estimate, as reported under § 63.3120(a)(5) through (9).

(4) A record of actions taken to minimize emissions in accordance with § 63.3100(d) and any corrective actions taken to return the affected unit to its normal or usual manner of operation.

(h) Before January 5, 2021, the records required by § 63.6(e)(3)(iii) through (v) related to SSM. On and after January 5, 2021, the provisions of this paragraph no longer apply.

(i) For each capture system that is a PTE, the data and documentation you used to support a determination that the capture system meets the criteria in Method 204 of appendix M to 40 CFR part 51 for a PTE and has a capture efficiency of 100 percent, as specified in § 63.3165(a).

(j) For each capture system that is not a PTE, the data and documentation you used to determine capture efficiency according to the requirements specified in §§ 63.3164 and 63.3165(b) through (g), including the records specified in paragraphs (j)(1) through (4) of this section that apply to you.

(1) *Records for a liquid-to-uncaptured-gas protocol using a temporary total enclosure or building enclosure.* Records of the mass of total volatile hydrocarbon (TVH), as measured by Method 204A or F of appendix M to 40 CFR part 51, for each material used in the coating operation, and the total TVH for all materials used during each capture efficiency test run, including a copy of the test report. Records of the mass of TVH emissions not captured by the capture system that exited the temporary total enclosure or building enclosure during each capture efficiency test run, as measured by Method 204D or E of appendix M to 40 CFR part 51, including a copy of the test report. Records documenting that the enclosure used for the capture efficiency test met the criteria in Method 204 of appendix M to 40 CFR part 51 for either a temporary total enclosure or a building enclosure.

(2) *Records for a gas-to-gas protocol using a temporary total enclosure or a building enclosure.* Records of the mass of TVH emissions captured by the emission capture system, as measured by Method 204B or C of appendix M to 40 CFR part 51, at the inlet to the add-on control device, including a copy of the test report. Records of the mass of TVH emissions not captured by the capture system that exited the temporary total enclosure or building enclosure during each capture efficiency test run, as measured by Method 204D or E of appendix M to 40 CFR part 51, including a copy of the test report. Records documenting that the enclosure used for the capture efficiency test met the criteria in Method 204 of appendix M to 40 CFR part 51 for either

sfrattini on LAPJZKW1R2 with $$_JOB
VerDate Sep<11>2014 09:16 Apr 04, 2023 Jkt 256165 PO 00000 Frm 00588 Fmt 8010 Sfmt 8010 Q:\40\256165.XXX PC31

a temporary total enclosure or a building enclosure.

(3) *Records for panel tests.* Records needed to document a capture efficiency determination using a panel test as described in §63.3165(e) and (g), including a copy of the test report and calculations performed to convert the panel test results to percent capture efficiency values.

(4) *Records for an alternative protocol.* Records needed to document a capture efficiency determination using an alternative method or protocol, as specified in §63.3165(f), if applicable.

(k) The records specified in paragraphs (k)(1) and (2) of this section for each add-on control device organic HAP destruction or removal efficiency determination as specified in §63.3166.

(1) Records of each add-on control device performance test conducted according to §§63.3164 and 63.3166.

(2) Records of the coating operation conditions during the add-on control device performance test showing that the performance test was conducted under representative operating conditions.

(l) Records of the data and calculations you used to establish the emission capture and add-on control device operating limits as specified in §63.3167 and to document compliance with the operating limits as specified in Table 1 to this subpart.

(m) Records of the data and calculations you used to determine the transfer efficiency for primer-surfacer and topcoat coatings and for all coatings, except for deadener and for adhesive and sealer that are not components of glass bonding systems, used in coating operations added to the affected source pursuant to §63.3082(c).

(n) A record of the work practice plans required by §63.3094(b) and (c) and documentation that you are implementing the plans on a continuous basis. Appropriate documentation may include operational and maintenance records, records of documented inspections, and records of internal audits.

(o) For each add-on control device and for each continuous parameter monitoring system, a copy of the equipment operating instructions must be maintained on-site for the life of the equipment in a location readily available to plant operators and inspectors. You may prepare your own equipment operating instructions, or they may be provided to you by the equipment supplier or other third party.

(p) On and after January 5, 2021, any records required to be maintained by this subpart that are submitted electronically via the EPA's CEDRI may be maintained in electronic format. This ability to maintain electronic copies does not affect the requirement for facilities to make records, data, and reports available upon request to a delegated air agency or the EPA as part of an on-site compliance evaluation.

[69 FR 22623, Apr. 26, 2004, as amended at 72 FR 20233, Apr. 24, 2007; 85 FR 41128, July 8, 2020; 86 FR 66039, Nov. 19, 2021]

§63.3131 In what form and for how long must I keep my records?

(a) Your records must be in a form suitable and readily available for expeditious review according to §63.10(b)(1). Where appropriate, the records may be maintained as electronic spreadsheets or as a database. On and after January 5, 2021, any records required to be maintained by this subpart that are submitted electronically via the EPA's CEDRI may be maintained in electronic format. This ability to maintain electronic copies does not affect the requirement for facilities to make records, data, and reports available upon request to a delegated air agency or the EPA as part of an on-site compliance evaluation.

(b) Except as provided in §63.3130(o), you must keep each record for 5 years following the date of each occurrence, measurement, maintenance, corrective action, report, or record, as specified in §63.10(b)(1).

(c) Except as provided in §63.3130(o), you must keep each record on site for at least 2 years after the date of each occurrence, measurement, maintenance, corrective action, report, or record according to §63.10(b)(1). You may keep the records off site for the remaining 3 years.

[69 FR 22623, Apr. 26, 2004, as amended at 85 FR 41129, July 8, 2020]

sfrattini on LAPJZKW1R2 with $$_JOB
VerDate Sep<11>2014 09:16 Apr 04, 2023 Jkt 256165 PO 00000 Frm 00589 Fmt 8010 Sfmt 8010 Q:\40\256165.XXX PC31

COMPLIANCE REQUIREMENTS FOR ADHESIVE, SEALER, AND DEADENER

§ 63.3150 By what date must I conduct the initial compliance demonstration?

You must complete the initial compliance demonstration for the initial compliance period according to the requirements of § 63.3151. The initial compliance period begins on the applicable compliance date specified in § 63.3083 and ends on the last day of the month following the compliance date. If the compliance date occurs on any day other than the first day of a month, then the initial compliance period extends through the end of that month plus the next month. You must determine the mass average organic HAP content of the materials used each month for each group of materials for which an emission limitation is established in § 63.3090(c) and (d) or § 63.3091(c) and (d). The initial compliance demonstration includes the calculations according to § 63.3151 and supporting documentation showing that during the initial compliance period, the mass average organic HAP content for each group of materials was equal to or less than the applicable emission limits in § 63.3090(c) and (d) or § 63.3091(c) and (d).

§ 63.3151 How do I demonstrate initial compliance with the emission limitations?

You must separately calculate the mass average organic HAP content of the materials used during the initial compliance period for each group of materials for which an emission limit is established in § 63.3090(c) and (d) or § 63.3091(c) and (d). If every individual material used within a group of materials meets the emission limit for that group of materials, you may demonstrate compliance with that emission limit by documenting the name and the organic HAP content of each material used during the initial compliance period. If any individual material used within a group of materials exceeds the emission limit for that group of materials, you must determine the mass average organic HAP content according to the procedures of paragraph (d) of this section.

(a) *Determine the mass fraction of organic HAP for each material used.* You must determine the mass fraction of organic HAP for each material used during the compliance period by using one of the options in paragraphs (a)(1) through (5) of this section.

(1) *Method 311 (appendix A to 40 CFR part 63).* You may use Method 311 for determining the mass fraction of organic HAP. Use the procedures specified in paragraphs (a)(1)(i) and (ii) of this section when performing a Method 311 test.

(i) Count each organic HAP in table 5 to this subpart that is present at 0.1 percent by mass or more and at 1.0 percent by mass or more for other compounds. For example, if toluene (not listed in table 5 to this subpart) is measured to be 0.5 percent of the material by mass, you do not have to count it. Express the mass fraction of each organic HAP you count as a value truncated to four places after the decimal point (*e.g.*, 0.3791).

(ii) Calculate the total mass fraction of organic HAP in the test material by adding up the individual organic HAP mass fractions and truncating the result to three places after the decimal point (*e.g.*, 0.7638 truncates to 0.763).

(2) *EPA Method 24 (appendix A–7 to 40 CFR part 60).* For coatings, you may use EPA Method 24 to determine the mass fraction of nonaqueous volatile matter and use that value as a substitute for mass fraction of organic HAP. As an alternative to using EPA Method 24, you may use ASTM D2369–10 (Reapproved 2015)^{e} (incorporated by reference, *see* § 63.14).

(3) *Alternative method.* You may use an alternative test method for determining the mass fraction of organic HAP once the Administrator has approved it. You must follow the procedure in § 63.7(f) to submit an alternative test method for approval.

(4) *Information from the supplier or manufacturer of the material.* You may rely on information other than that generated by the test methods specified in paragraphs (a)(1) through (3) of this section, such as manufacturer's formulation data, if it represents each organic HAP in table 5 to this subpart that is present at 0.1 percent by mass or more and at 1.0 percent by mass or

sfrattini on LAPJZKW1R2 with $$_JOB
VerDate Sep<11>2014 09:16 Apr 04, 2023 Jkt 256165 PO 00000 Frm 00590 Fmt 8010 Sfmt 8010 Q:\40\256165.XXX PC31

more for other compounds. For example, if toluene (not listed in table 5 of this subpart) is 0.5 percent of the material by mass, you do not have to count it. If there is a disagreement between such information and results of a test conducted according to paragraphs (a)(1) through (3) of this section, then the test method results will take precedence, unless after consultation, the facility demonstrates to the satisfaction of the enforcement authority that the facility's data are correct.

(5) *Solvent blends.* Solvent blends may be listed as single components for some materials in data provided by manufacturers or suppliers. Solvent blends may contain organic HAP which must be counted toward the total organic HAP mass fraction of the materials. When neither test data nor manufacturer's data for solvent blends are available, you may use the default values for the mass fraction of organic HAP in the solvent blends listed in Table 3 or 4 to this subpart. If you use the tables, you must use the values in Table 3 for all solvent blends that match Table 3 entries, and you may only use Table 4 if the solvent blends in the materials you use do not match any of the solvent blends in Table 3 and you only know whether the blend is aliphatic or aromatic. However, if the results of a Method 311 test indicate higher values than those listed on Table 3 or 4 to this subpart, the Method 311 results will take precedence, unless after consultation, the facility demonstrates to the satisfaction of the enforcement authority that the data from Table 3 or 4 are correct.

(b) *Determine the density of each material used.* Determine the density of each material used during the compliance period from test results using ASTM D1475–13 (incorporated by reference, *see* §63.14) or for powder coatings, test method A or test method B of ASTM D5965–02 (Reapproved 2013) (incorporated by reference, *see* §63.14), or information from the supplier or manufacturer of the material. If there is disagreement between ASTM D1475–13 test results or ASTM D5965–02 (Reapproved 2013), test method A or test method B test results and the supplier's or manufacturer's information, the test results will take precedence unless after consultation, the facility demonstrates to the satisfaction of the enforcement authority that the facility's data are correct.

(c) *Determine the volume of each material used.* Determine the volume (liters) of each material used during each month by measurement or usage records.

(d) *Determine the mass average organic HAP content for each group of materials.* Determine the mass average organic HAP content of the materials used during the initial compliance period for each group of materials for which an emission limit is established in §63.3090(c) and (d) or §63.3091(c) and (d), using Equations 1 and 2 of this section.

(1) Calculate the mass average organic HAP content of adhesive and sealer materials other than components of the glass bonding system used in the initial compliance period using Equation 1 of this section:

$$C_{avg,\,as} = \frac{\sum_{j=1}^{r} \left(Vol_{as,\,j}\right)\left(D_{as,\,j}\right)\left(W_{as,\,j}\right)}{\sum_{j=1}^{r} \left(Vol_{as,\,j}\right)\left(D_{as,\,j}\right)} \qquad \text{(Eq. 1)}$$

Where:

$C_{avg,\,as}$ = Mass average organic HAP content of adhesives and sealer materials used, kg/kg.

$Vol_{as,\,j}$ = Volume of adhesive or sealer material, j, used, liters.

$D_{as,\,j}$ = Density of adhesive or sealer material, j, used, kg per liter.

$W_{as,\,j}$ = Mass fraction of organic HAP in adhesive or sealer material, j, kg/kg.

r = Number of adhesive and sealer materials used.

sfrattini on LAPJZKW1R2 with $$_JOB
VerDate Sep<11>2014 09:16 Apr 04, 2023 Jkt 256165 PO 00000 Frm 00591 Fmt 8010 Sfmt 8010 Q:\40\256165.XXX PC31
ER26AP04.034</MATH>

(2) Calculate the mass average organic HAP content of deadener materials used in the initial compliance period using Equation 2 of this section:

$$C_{avg,\,d} = \frac{\sum_{m=1}^{s} \left(Vol_{d,\,m}\right)\left(D_{d,\,m}\right)\left(W_{d,\,m}\right)}{\sum_{m=1}^{s} \left(Vol_{d,\,m}\right)\left(D_{d,\,m}\right)} \qquad \text{(Eq. 2)}$$

Where:

$C_{avg,\,d}$ = Mass average organic HAP content of deadener material used, kg/kg.

$Vol_{d,\,m}$ = Volume of deadener material, m, used, liters.

$D_{d,\,m}$ = Density of deadener material, m, used, kg per liter.

$W_{d,\,m}$ = Mass fraction of organic HAP in deadener material, m, kg/kg.

s = Number of deadener materials used.

(e) *Compliance demonstration.* The mass average organic HAP content for the compliance period must be less than or equal to the applicable emission limit in § 63.3090(c) and (d) or § 63.3091(c) and (d). You must keep all records as required by §§ 63.3130 and 63.3131. As part of the Notification of Compliance Status required by § 63.3110, you must submit a statement that the coating operations were in compliance with the emission limitations during the initial compliance period because the mass average organic HAP content was less than or equal to the applicable emission limits in § 63.3090(c) and (d) or § 63.3091(c) and (d), determined according to this section.

[69 FR 22623, Apr. 26, 2004, as amended at 85 FR 41129, July 8, 2020]

§ 63.3152 How do I demonstrate continuous compliance with the emission limitations?

(a) To demonstrate continuous compliance, the mass average organic HAP content for each compliance period, determined according to § 63.3151(a) through (d), must be less than or equal to the applicable emission limit in § 63.3090(c) and (d) or § 63.3091(c) and (d). A compliance period consists of 1 month. Each month after the end of the initial compliance period described in § 63.3150 is a compliance period consisting of that month.

(b) If the mass average organic HAP emission content for any compliance period exceeds the applicable emission limit in § 63.3090(c) and (d) or § 63.3091(c) and (d), this is a deviation from the emission limitations for that compliance period and must be reported as specified in §§ 63.3110(c)(6) and 63.3120(a)(5).

(c) You must maintain records as specified in §§ 63.3130 and 63.3131.

COMPLIANCE REQUIREMENTS FOR THE COMBINED ELECTRODEPOSITION PRIMER, PRIMER-SURFACER, TOPCOAT, FINAL REPAIR, GLASS BONDING PRIMER, AND GLASS BONDING ADHESIVE EMISSION LIMITATIONS

§ 63.3160 By what date must I conduct initial performance tests and other initial compliance demonstrations?

(a) *New and reconstructed affected sources.* For a new or reconstructed affected source, you must meet the requirements of paragraphs (a)(1) through (4) of this section.

(1) All emission capture systems, add-on control devices, and CPMS must be installed and operating no later than the applicable compliance date specified in § 63.3083. You must conduct a performance test of each capture system and add-on control device according to §§ 63.3164 through 63.3166 and establish the operating limits required by § 63.3093 no later than 180 days after the applicable compliance date specified in § 63.3083.

(2) You must develop and begin implementing the work practice plans required by § 63.3094(b) and (c) no later than the compliance date specified in § 63.3083.

(3) You must complete the initial compliance demonstration for the initial compliance period according to the

sfrattini on LAPJZKW1R2 with $$_JOB
VerDate Sep<11>2014 09:16 Apr 04, 2023 Jkt 256165 PO 00000 Frm 00592 Fmt 8010 Sfmt 8010 Q:\40\256165.XXX PC31
ER26AP04.035</MATH>

requirements of §63.3161. The initial compliance period begins on the applicable compliance date specified in §63.3083 and ends on the last day of the month following the compliance date. If the compliance date occurs on any day other than the first day of a month, then the initial compliance period extends through the end of that month plus the next month. You must determine the mass of organic HAP emissions and volume of coating solids deposited in the initial compliance period. The initial compliance demonstration includes the results of emission capture system and add-on control device performance tests conducted according to §§63.3164 through 63.3166; supporting documentation showing that during the initial compliance period the organic HAP emission rate was equal to or less than the emission limit in §63.3090(a); the operating limits established during the performance tests and the results of the continuous parameter monitoring required by §63.3168; and documentation of whether you developed and implemented the work practice plans required by §63.3094(b) and (c).

(4) You do not need to comply with the operating limits for the emission capture system and add-on control device required by §63.3093 until after you have completed the performance tests specified in paragraph (a)(1) of this section. Instead, you must maintain a log detailing the operation and maintenance of the emission capture system, add-on control device, and CPMS during the period between the compliance date and the performance test. You must begin complying with the operating limits for your affected source on the date you complete the performance tests specified in paragraph (a)(1) of this section.

(b) *Existing affected sources.* For an existing affected source, you must meet the requirements of paragraphs (b)(1) through (3) of this section.

(1) All emission capture systems, add-on control devices, and CPMS must be installed and operating no later than the applicable compliance date specified in §63.3083. You must conduct an initial performance test of each capture system and add-on control device according to the procedures in §§63.3164 through 63.3166 and establish the operating limits required by §63.3093 no later than the compliance date specified in §63.3083.

(2) You must develop and begin implementing the work practice plans required by §63.3094(b) and (c) no later than the compliance date specified in §63.3083.

(3) You must complete the initial compliance demonstration for the initial compliance period according to the requirements of §63.3161. The initial compliance period begins on the applicable compliance date specified in §63.3083 and ends on the last day of the month following the compliance date. If the compliance date occurs on any day other than the first day of a month, then the initial compliance period extends through the end of that month plus the next month. You must determine the mass of organic HAP emissions and volume of coating solids deposited during the initial compliance period. The initial compliance demonstration includes the results of emission capture system and add-on control device performance tests conducted according to §§63.3164 through 63.3166; supporting documentation showing that during the initial compliance period the organic HAP emission rate was equal to or less than the emission limits in §63.3091(a); the operating limits established during the performance tests and the results of the continuous parameter monitoring required by §63.3168; and documentation of whether you developed and implemented the work practice plans required by §63.3094(b) and (c).

(c) You are not required to conduct an initial performance test to determine capture efficiency or destruction efficiency of a capture system or control device if you receive approval to use the results of a performance test that has been previously conducted on that capture system (either a previous stack test or a previous panel test) or control device. You are not required to conduct an initial test to determine transfer efficiency if you receive approval to use the results of a test that has been previously conducted. Any such previous tests must meet the conditions described in paragraphs (c)(1) through (3) of this section.

sfrattini on LAPJZKW1R2 with $$_JOB
VerDate Sep<11>2014 09:16 Apr 04, 2023 Jkt 256165 PO 00000 Frm 00593 Fmt 8010 Sfmt 8010 Q:\40\256165.XXX PC31

(1) The previous test must have been conducted using the methods and conditions specified in this subpart.

(2) Either no process or equipment changes have been made since the previous test was performed or the owner or operator must be able to demonstrate that the results of the performance test reliably demonstrate compliance despite process or equipment changes.

(3) Either the required operating parameters were established in the previous test or sufficient data were collected in the previous test to establish the required operating parameters.

[69 FR 22623, Apr. 26, 2004, as amended at 85 FR 41129, July 8, 2020]

§ 63.3161 How do I demonstrate initial compliance?

(a) You must meet all of the requirements of this section to demonstrate initial compliance. To demonstrate initial compliance, the organic HAP emissions from the combined electrodeposition primer, primer-surfacer, topcoat, final repair, glass bonding primer, and glass bonding adhesive operations plus all coatings and thinners, except for deadener materials and for adhesive and sealer materials that are not components of glass bonding systems, used in coating operations added to the affected source pursuant to § 63.3082(c) must meet the applicable emission limitation in § 63.3090(a) or § 63.3091(a) and the applicable operating limits and work practice standards in §§ 63.3093 and 63.3094.

(b) *Compliance with operating limits.* Except as provided in § 63.3160(a)(4), you must establish and demonstrate continuous compliance during the initial compliance period with the operating limits required by § 63.3093, using the procedures specified in §§ 63.3167 and 63.3168.

(c) *Compliance with work practice requirements.* You must develop, implement, and document your implementation of the work practice plans required by § 63.3094(b) and (c) during the initial compliance period, as specified in § 63.3130.

(d) *Compliance with emission limits.* You must follow the procedures in paragraphs (e) through (o) of this section to demonstrate compliance with the applicable emission limit in § 63.3090(a) or § 63.3091(a). You may also use the guidelines presented in ''Protocol for Determining the Daily Volatile Organic Compound Emission Rate of Automobile and Light-Duty Truck Primer-Surfacer and Topcoat'' EPA–453/R–08–002 (incorporated by reference, *see* § 63.14) in making this demonstration.

(e) *Determine the mass fraction of organic HAP, density, and volume used.* Follow the procedures specified in § 63.3151(a) through (c) to determine the mass fraction of organic HAP and the density and volume of each coating and thinner used during each month. For electrodeposition primer operations, the mass fraction of organic HAP, density, and volume used must be determined for each material added to the tank or system during each month.

(f) *Determine the volume fraction of coating solids for each coating.* You must determine the volume fraction of coating solids (liter of coating solids per liter of coating) for each coating used during the compliance period by a test or by information provided by the supplier or the manufacturer of the material, as specified in paragraphs (f)(1) and (2) of this section. For electrodeposition primer operations, the volume fraction of solids must be determined for each material added to the tank or system during each month. If test results obtained according to paragraph (f)(1) of this section do not agree with the information obtained under paragraph (f)(2) of this section, the test results will take precedence unless, after consultation, the facility demonstrates to the satisfaction of the enforcement authority that the facility's data are correct.

(1) *ASTM Method D2697–03 (Reapproved 2014) or ASTM Method D6093–97 (Reapproved 2016).* You may use ASTM D2697–03 (Reapproved 2014) (incorporated by reference, *see* § 63.14), or ASTM D6093–97 (Reapproved 2016) (incorporated by reference, *see* § 63.14), to determine the volume fraction of coating solids for each coating. Divide the nonvolatile volume percent obtained with the methods by 100 to calculate volume fraction of coating solids.

(2) *Information from the supplier or manufacturer of the material.* You may

sfrattini on LAPJZKW1R2 with $$_JOB
VerDate Sep<11>2014 09:16 Apr 04, 2023 Jkt 256165 PO 00000 Frm 00594 Fmt 8010 Sfmt 8010 Q:\40\256165.XXX PC31

obtain the volume fraction of coating solids for each coating from the supplier or manufacturer.

(g) *Determine the transfer efficiency for each coating.* You must determine the transfer efficiency for each primer-surfacer and topcoat coating, and for all coatings, except for deadener and for adhesive and sealer that are not components of glass bonding systems, used in coating operations added to the affected source pursuant to §63.3082(c) using ASTM Method D5066–91 (Reapproved 2017), ''Standard Test Method for Determination of the Transfer Efficiency Under Production Conditions for Spray Application of Automotive Paints-Weight Basis'' (incorporated by reference, *see* §63.14), or the guidelines presented in ''Protocol for Determining the Daily Volatile Organic Compound Emission Rate of Automobile and Light-Duty Truck Primer-Surfacer and Topcoat'' EPA–453/R–08–002 (incorporated by reference, *see* §63.14). You may conduct transfer efficiency testing on representative coatings and for representative spray booths as described in ''Protocol for Determining the Daily Volatile Organic Compound Emission Rate of Automobile and Light-Duty Truck Primer-Surfacer and Topcoat'' EPA–453/R–08–002 (incorporated by reference, *see* §63.14). You may assume 100 percent transfer efficiency for electrodeposition primer coatings, glass bonding primers, and glass bonding adhesives. For final repair coatings, you may assume 40 percent transfer efficiency for air atomized spray and 55 percent transfer efficiency for electrostatic spray and high volume, low pressure spray. For blackout, chip resistant edge primer, interior color, inline repair, lower body anti-chip coatings, or underbody anti-chip coatings, you may assume 40 percent transfer efficiency for air atomized spray, 55 percent transfer efficiency for electrostatic spray and high volume-low pressure spray, and 80 percent transfer efficiency for airless spray.

(h) *Calculate the total mass of organic HAP emissions before add-on controls.* Calculate the total mass of organic HAP emissions before consideration of add-on controls from all coatings and thinners used during each month in the combined electrodeposition primer, primer-surfacer, topcoat, final repair, glass bonding primer, and glass bonding adhesive operations plus all coatings and thinners, except for deadener materials and for adhesive and sealer materials that are not components of glass bonding systems, used in coating operations added to the affected source pursuant to §63.3082(c) using Equation 1 of this section:

$$H_{BC} = A + B \qquad \text{(Eq. 1)}$$

Where:

H_{BC} = Total mass of organic HAP emissions before consideration of add-on controls during the month, kg.

A = Total mass of organic HAP in the coatings used during the month, kg, as calculated in Equation 1A of this section.

B = Total mass of organic HAP in the thinners used during the month, kg, as calculated in Equation 1B of this section.

(1) Calculate the kg organic HAP in the coatings used during the month using Equation 1A of this section:

$$A = \sum_{i=1}^{m} \left(Vol_{c,i}\right)\left(D_{c,i}\right)\left(W_{c,i}\right) \qquad \text{(Eq. 1A)}$$

Where:

A = Total mass of organic HAP in the coatings used during the month, kg.

$Vol_{c,\,i}$ = Total volume of coating, i, used during the month, liters.

$D_{c,\,i}$ = Density of coating, i, kg coating per liter coating.

$W_{c,\,i}$ = Mass fraction of organic HAP in coating, i, kg organic HAP per kg coating.

m = Number of different coatings used during the month.

(2) Calculate the kg of organic HAP in the thinners used during the month using Equation 1B of this section:

$$B = \sum_{j=1}^{n} \left(Vol_{t,j}\right)\left(D_{t,j}\right)\left(W_{t,j}\right) \qquad \text{(Eq. 1B)}$$

Where:

B = Total mass of organic HAP in the thinners used during the month, kg.

$Vol_{t,\,j}$ = Total volume of thinner, j, used during the month, liters.

$D_{t,\,j}$ = Density of thinner, j, kg per liter.

$W_{t,\,j}$ = Mass fraction of organic HAP in thinner, j, kg organic HAP per kg thinner.

n = Number of different thinners used during the month.

(i) *Calculate the organic HAP emission reduction for each controlled coating operation.* Determine the mass of organic

sfrattini on LAPJZKW1R2 with $$_JOB
VerDate Sep<11>2014 09:16 Apr 04, 2023 Jkt 256165 PO 00000 Frm 00595 Fmt 8010 Sfmt 8010 Q:\40\256165.XXX PC31
ER26AP04.000</MATH> ER26AP04.001</MATH> ER26AP04.002</MATH>

HAP emissions reduced for each controlled coating operation during each month. The emission reduction determination quantifies the total organic HAP emissions captured by the emission capture system and destroyed or removed by the add-on control device. Use the procedures in paragraph (j) of this section to calculate the mass of organic HAP emission reduction for each controlled coating operation using an emission capture system and add-on control device other than a solvent recovery system for which you conduct liquid-liquid material balances. For each controlled coating operation using a solvent recovery system for which you conduct a liquid-liquid material balance, use the procedures in paragraph (k) of this section to calculate the organic HAP emission reduction.

(j) *Calculate the organic HAP emission reduction for each controlled coating operation not using liquid-liquid material balances.* For each controlled coating operation using an emission capture system and add-on control device other than a solvent recovery system for which you conduct liquid-liquid material balances, calculate the mass of organic HAP emission reduction for the controlled coating operation, excluding all periods of time in which a deviation, including a deviation during a period of startup, shutdown, or malfunction, from an operating limit or from any CPMS requirement for the capture system or control device serving the controlled coating operation occurred, during the month using Equation 2 of this section. The calculation of mass of organic HAP emission reduction for the controlled coating operation during the month applies the emission capture system efficiency and add-on control device efficiency to the mass of organic HAP contained in the coatings and thinners that are used in the coating operation served by the emission capture system and add-on control device during each month. Except as provided in paragraph (p) of this section, for any period of time in which a deviation, including a deviation during a period of startup, shutdown, or malfunction, from an operating limit or from any CPMS requirement of the capture system or control device serving the controlled coating operation occurred, you must assume zero efficiency for the emission capture system and add-on control device. Equation 2 of this section treats the materials used during such a deviation as if they were used on an uncontrolled coating operation for the time period of the deviation.

$$H_{Cn} = \left(A_C + B_C - A_{unc} - B_{unc}\right)\left(\frac{CE}{100} \times \frac{DRE}{100}\right) \qquad \text{(Eq. 2)}$$

Where:

H_{Cn} = Mass of organic HAP emission reduction, excluding all periods of time in which a deviation, including a deviation during a period of startup, shutdown, or malfunction, from an operating limit or from any CPMS requirement for the capture system or control device serving the controlled coating operation occurred, for the controlled coating operation during the month, kg.

A_C = Total mass of organic HAP in the coatings used in the controlled coating operation during the month, kg, as calculated in Equation 2A of this section.

B_C = Total mass of organic HAP in the thinners used in the controlled coating operation during the month, kg, as calculated in Equation 2B of this section.

A_{unc} = Total mass of organic HAP in the coatings used during all periods of time in which a deviation, including a deviation during a period of startup, shutdown, or malfunction, from an operating limit or from any CPMS requirement for the capture system or control device serving the controlled coating operation occurred for the controlled coating operation during the month, kg, as calculated in Equation 2C of this section.

B_{unc} = Total mass of organic HAP in the thinners used during all periods of time in which a deviation, including a deviation during a period of startup, shutdown, or malfunction, from an operating limit or from any CPMS requirement for the capture system or control device serving the controlled coating operation occurred for the controlled coating operation during

sfrattini on LAPJZKW1R2 with $$_JOB
VerDate Sep<11>2014 09:16 Apr 04, 2023 Jkt 256165 PO 00000 Frm 00596 Fmt 8010 Sfmt 8010 Q:\40\256165.XXX PC31
ER26AP04.003</MATH>

the month, kg, as calculated in Equation 2D of this section.

CE = Capture efficiency of the emission capture system vented to the add-on control device, percent. Use the test methods and procedures specified in §§63.3164 and 63.3165 to measure and record capture efficiency.

DRE = Organic HAP destruction or removal efficiency of the add-on control device, percent. Use the test methods and procedures in §§63.3164 and 63.3166 to measure and record the organic HAP destruction or removal efficiency.

(1) Calculate the mass of organic HAP in the coatings used in the controlled coating operation, kg, using Equation 2A of this section.

$$A_c = \sum_{i=1}^{m} \left(Vol_{c,i}\right)\left(D_{c,i}\right)\left(W_{c,i}\right) \qquad \text{(Eq. 2A)}$$

Where:

A_C = Total mass of organic HAP in the coatings used in the controlled coating operation during the month, kg.

$Vol_{c,\ i}$ = Total volume of coating, i, used during the month, liters.

$D_{c,\ i}$ = Density of coating, i, kg per liter.

$W_{c,\ i}$ = Mass fraction of organic HAP in coating, i, kg per kg.

m = Number of different coatings used.

(2) Calculate the mass of organic HAP in the thinners used in the controlled coating operation, kg, using Equation 2B of this section.

$$B_c = \sum_{j=1}^{n} \left(Vol_{t,j}\right)\left(D_{t,j}\right)\left(W_{t,j}\right) \qquad \text{(Eq. 2B)}$$

Where:

B_C = Total mass of organic HAP in the thinners used in the controlled coating operation during the month, kg.

$Vol_{t,\ j}$ = Total volume of thinner, j, used during the month, liters.

$D_{t,\ j}$ = Density of thinner, j, kg per liter.

$W_{t,\ j}$ = Mass fraction of organic HAP in thinner, j, kg per kg.

n = Number of different thinners used.

(3) Calculate the mass of organic HAP in the coatings used in the controlled coating operation during deviations specified in §63.3163(c) and (d), using Equation 2C of this section:

$$A_{unc} = \sum_{i=1}^{m} \left(VOLD_i\right)\left(D_i\right)\left(W_i\right) \qquad \text{(Eq. 2C)}$$

Where:

A_{unc} = Total mass of organic HAP in the coatings used during all periods of time in which a deviation, including a deviation during a period of startup, shutdown, or malfunction, from an operating limit or from any CPMS requirement for the capture system or control device serving the controlled coating operation occurred for the controlled coating operation during the month, kg.

$VOLD_i$ = Total volume of coating, i, used in the controlled coating operation during deviations, liters.

D_i = Density of coating, i, kg per liter.

W_i = Mass fraction of organic HAP in coating, i, kg organic HAP per kg coating.

m = Number of different coatings.

(4) Calculate the mass of organic HAP in the thinners used in the controlled coating operation during deviations specified in §63.3163(c) and (d), using Equation 2D of this section:

$$B_{unc} = \sum_{j=1}^{n} \left(VOLD_j\right)\left(D_j\right)\left(W_j\right) \qquad \text{(Eq. 2D)}$$

Where:

B_{unc} = Total mass of organic HAP in the thinners used during all periods of time in which a deviation, including a deviation during a period of startup, shutdown, or malfunction, from an operating limit or from any CPMS requirement for the capture system or control device serving the controlled coating operation occurred for the controlled coating operation during the month, kg.

$VOLD_j$ = Total volume of thinner, j, used in the controlled coating operation during deviations, liters.

D_j = Density of thinner, j, kg per liter.

W_h = Mass fraction of organic HAP in thinner, j, kg organic HAP per kg coating.

n = Number of different thinners.

(k) *Calculate the organic HAP emission reduction for each controlled coating operation using liquid-liquid material balances.* For each controlled coating operation using a solvent recovery system for which you conduct liquid-liquid material balances, calculate the

sfrattini on LAPJZKW1R2 with $$_JOB
VerDate Sep<11>2014 09:16 Apr 04, 2023 Jkt 256165 PO 00000 Frm 00597 Fmt 8010 Sfmt 8010 Q:\40\256165.XXX PC31
ER26AP04.004</MATH> ER26AP04.005</MATH> ER26AP04.006</MATH> ER26AP04.007</MATH>

mass of organic HAP emission reduction for the coating operation controlled by the solvent recovery system using a liquid-liquid material balance during the month by applying the volatile organic matter collection and recovery efficiency to the mass of organic HAP contained in the coatings and thinners used in the coating operation controlled by the solvent recovery system during each month. Perform a liquid-liquid material balance for each month as specified in paragraphs (k)(1) through (6) of this section. Calculate the mass of organic HAP emission reduction by the solvent recovery system as specified in paragraph (k)(7) of this section.

(1) For each solvent recovery system, install, calibrate, maintain, and operate according to the manufacturer's specifications, a device that indicates the cumulative amount of volatile organic matter recovered by the solvent recovery system each month. The device must be initially certified by the manufacturer to be accurate to within ±2.0 percent of the mass of volatile organic matter recovered.

(2) For each solvent recovery system, determine the mass of volatile organic matter recovered for the month, kg, based on measurement with the device required in paragraph (k)(1) of this section.

(3) Determine the mass fraction of volatile organic matter for each coating and thinner used in the coating operation controlled by the solvent recovery system during the month, kg volatile organic matter per kg coating. You may determine the volatile organic matter mass fraction using EPA Method 24 of 40 CFR part 60, appendix A–7, or an EPA approved alternative method, or you may use information provided by the manufacturer or supplier of the coating. In the event of any inconsistency between information provided by the manufacturer or supplier and the results of EPA Method 24 of 40 CFR part 60, appendix A–7, or an approved alternative method, the test method results will govern unless after consultation, the facility demonstrates to the satisfaction of the enforcement authority that the facility's data are correct.

(4) Determine the density of each coating and thinner used in the coating operation controlled by the solvent recovery system during the month, kg per liter, according to § 63.3151(b).

(5) Measure the volume of each coating and thinner used in the coating operation controlled by the solvent recovery system during the month, liters.

(6) Each month, calculate the solvent recovery system's volatile organic matter collection and recovery efficiency, using Equation 3 of this section:

$$R_v = 100 \frac{M_{VR}}{\sum_{i=1}^{m} Vol_i D_i WV_{c,i} + \sum_{j=1}^{n} Vol_j D_j WV_{t,j}} \qquad \text{(Eq. 3)}$$

Where:

R_V = Volatile organic matter collection and recovery efficiency of the solvent recovery system during the month, percent.

M_{VR} = Mass of volatile organic matter recovered by the solvent recovery system during the month, kg.

Vol_i = Volume of coating, i, used in the coating operation controlled by the solvent recovery system during the month, liters.

D_i = Density of coating, i, kg per liter.

$WV_{c,\,i}$ = Mass fraction of volatile organic matter for coating, i, kg volatile organic matter per kg coating.

Vol_j = Volume of thinner, j, used in the coating operation controlled by the solvent recovery system during the month, liters.

D_j = Density of thinner, j, kg per liter.

$WV_{t,\,j}$ = Mass fraction of volatile organic matter for thinner, j, kg volatile organic matter per kg thinner.

m = Number of different coatings used in the coating operation controlled by the solvent recovery system during the month.

sfrattini on LAPJZKW1R2 with $$_JOB
VerDate Sep<11>2014 09:16 Apr 04, 2023 Jkt 256165 PO 00000 Frm 00598 Fmt 8010 Sfmt 8010 Q:\40\256165.XXX PC31
ER26AP04.008</MATH>

n = Number of different thinners used in the coating operation controlled by the solvent recovery system during the month.

(7) Calculate the mass of organic HAP emission reduction for the coating operation controlled by the solvent recovery system during the month, using Equation 4 of this section:

$$H_{CSR} = \left(A_{CSR} + B_{CSR}\right)\left(\frac{R_V}{100}\right) \qquad \text{(Eq. 4)}$$

Where:

H_{CSR} = Mass of organic HAP emission reduction for the coating operation controlled by the solvent recovery system using a liquid-liquid material balance during the month, kg.

A_{CSR} = Total mass of organic HAP in the coatings used in the coating operation controlled by the solvent recovery system, kg, calculated using Equation 4A of this section.

B_{CSR} = Total mass of organic HAP in the thinners used in the coating operation controlled by the solvent recovery system, kg, calculated using Equation 4B of this section.

R_V = Volatile organic matter collection and recovery efficiency of the solvent recovery system, percent, from Equation 3 of this section.

(i) Calculate the mass of organic HAP in the coatings used in the coating operation controlled by the solvent recovery system, kg, using Equation 4A of this section.

$$A_{CSR} = \sum_{i=1}^{m} \left(Vol_{c,i}\right)\left(D_{c,i}\right)\left(W_{c,i}\right) \qquad \text{(Eq. 4A)}$$

Where:

A_{CSR} = Total mass of organic HAP in the coatings used in the coating operation controlled by the solvent recovery system during the month, kg.

$Vol_{c,\ i}$ = Total volume of coating, i, used during the month in the coating operation controlled by the solvent recovery system, liters.

$D_{c,\ i}$ = Density of coating, i, kg per liter.

$W_{c,\ i}$ = Mass fraction of organic HAP in coating, i, kg per kg.

m = Number of different coatings used.

(ii) Calculate the mass of organic HAP in the thinners used in the coating operation controlled by the solvent recovery system, kg, using Equation 4B of this section.

$$B_{CSR} = \sum_{j=1}^{n} \left(Vol_{t,j}\right)\left(D_{t,j}\right)\left(W_{t,j}\right) \qquad \text{(Eq. 4B)}$$

Where:

B_{CSR} = Total mass of organic HAP in the thinners used in the coating operation controlled by the solvent recovery system during the month, kg.

$Vol_{t,\ j}$ = Total volume of thinner, j, used during the month in the coating operation controlled by the solvent recovery system, liters.

$D_{t,\ j}$ = Density of thinner, j, kg per liter.

$W_{t,\ j}$ = Mass fraction of organic HAP in thinner, j, kg per kg.

n = Number of different thinners used.

(l) *Calculate the total volume of coating solids deposited.* Determine the total volume of coating solids deposited, liters, in the combined electrodeposition primer, primer-surfacer, topcoat, final repair, glass bonding primer, and glass bonding adhesive operations plus all coatings and thinners, except for deadener materials and for adhesive and sealer materials that are not components of glass bonding systems used in coating operations added to the affected source pursuant to §63.3082(c) using Equation 5 of this section:

sfrattini on LAPJZKW1R2 with $$_JOB
VerDate Sep<11>2014 09:16 Apr 04, 2023 Jkt 256165 PO 00000 Frm 00599 Fmt 8010 Sfmt 8010 Q:\40\256165.XXX PC31
ER26AP04.009</MATH> ER26AP04.010</MATH> ER26AP04.011</MATH>

$$V_{sdep} = \sum_{i=1}^{m} \left(Vol_{c,i}\right)\left(V_{s,i}\right)\left(TE_{c,i}\right) \qquad \text{(Eq. 5)}$$

Where:

V_{sdep} = Total volume of coating solids deposited during the month, liters.

$Vol_{c,i}$ = Total volume of coating, i, used during the month, liters.

$V_{s,i}$ = Volume fraction of coating solids for coating, i, liter solids per liter coating, determined according to § 63.3161(f).

$TE_{c,i}$ = Transfer efficiency of coating, i, determined according to § 63.3161(g), expressed as a decimal, for example 60 percent must be expressed as 0.60.

M = Number of coatings used during the month.

(m) *Calculate the mass of organic HAP emissions for each month.* Determine the mass of organic HAP emissions, kg, during each month, using Equation 6 of this section.

$$H_{HAP} = H_{BC} - \sum_{i=1}^{q} \left(H_{Cn,i}\right) - \sum_{j=1}^{r} \left(H_{CSR,j}\right) - \sum_{k=1}^{q} \sum_{m=1}^{Sk} \left(H_{DEV,k,m}\right) \qquad \text{(Eq. 6)}$$

Where:

H_{HAP} = Total mass of organic HAP emissions for the month, kg.

H_{BC} = Total mass of organic HAP emissions before add-on controls from all the coatings and thinners used during the month, kg, determined according to paragraph (h) of this section.

$H_{Cn,i}$ = Total mass of organic HAP emission reduction for controlled coating operation, i, not using a liquid-liquid material balance, excluding all periods of time in which a deviation, including a deviation during a period of startup, shutdown, or malfunction, from an operating limit or from any CPMS requirement for the capture system or control device serving the controlled coating operation occurred, for the controlled coating operation during the month, from Equation 2 of this section.

$H_{CSR,j}$ = Total mass of organic HAP emission reduction for coating operation, j, controlled by a solvent recovery system using a liquid-liquid material balance, during the month, kg, from Equation 4 of this section.

$H_{DEV,k,m}$ = Mass of organic HAP emission reduction, based on the capture system and control device efficiency approved under paragraph (p) of this section for period of deviation, m, for controlled coating operation, k, kg, as determined using Equation 8 of this section.

q = Number of controlled coating operations not using a liquid-liquid material balance.

r = Number of coating operations controlled by a solvent recovery system using a liquid-liquid material balance.

S_k = Number of periods of deviation in the month for which non-zero capture and control device efficiencies have been approved for controlled coating operation, k.

(n) *Calculate the organic HAP emission rate for the month.* Determine the organic HAP emission rate for the month, kg organic HAP per liter coating solids deposited, using Equation 7 of this section:

$$H_{rate} = \left(H_{HAP}\right)/\left(V_{sdep}\right) \qquad \text{(Eq. 7)}$$

Where:

H_{rate} = Organic HAP emission rate for the month compliance period, kg organic HAP per liter coating solids deposited.

H_{HAP} = Mass of organic HAP emissions for the month, kg, determined according to Equation 6 of this section.

V_{sdep} = Total volume of coating solids deposited during the month, liters, from Equation 5 of this section.

(o) *Compliance demonstration.* To demonstrate initial compliance, the organic HAP emissions from the combined electrodeposition primer, primer-surfacer, topcoat, final repair, glass bonding primer, and glass bonding adhesive operations plus all coatings and thinners, except for deadener materials and for adhesive and sealer materials that are not components of glass bonding systems, used in coating operations added to the affected source pursuant to § 63.3082(c) must be less than or equal

sfrattini on LAPJZKW1R2 with $$_JOB
VerDate Sep<11>2014 09:16 Apr 04, 2023 Jkt 256165 PO 00000 Frm 00600 Fmt 8010 Sfmt 8010 Q:\40\256165.XXX PC31
ER24AP07.001</MATH> ER26AP04.013</MATH> ER26AP04.014</MATH>

to the applicable emission limitation in §63.3090(a) or §63.3091(a). You must keep all records as required by §§63.3130 and 63.3131. As part of the Notification of Compliance Status required by §63.3110, you must submit a statement that the coating operation(s) was (were) in compliance with the emission limitations during the initial compliance period because the organic HAP emission rate was less than or equal to the applicable emission limit in §63.3090(a) or §63.3091(a) and you achieved the operating limits required by §63.3093 and the work practice standards required by §63.3094.

(p) You may request approval from the Administrator to use non-zero capture efficiencies and add-on control device efficiencies for any period of time in which a deviation, including a deviation during a period of startup, shutdown, or malfunction, from an operating limit or from any CPMS requirement for the capture system or add-on control device serving a controlled coating operation occurred.

(1) If you have manually collected parameter data indicating that a capture system or add-on control device was operating normally during a CPMS malfunction, a CPMS out-of-control period, or associated repair, then these data may be used to support and document your request to use the normal capture efficiency or add-on control device efficiency for that period of deviation.

(2) If you have data indicating the actual performance of a capture system or add-on control device (*e.g.*, capture efficiency measured at a reduced flow rate or add-on control device efficiency measured at a reduced thermal oxidizer temperature) during a deviation, including a deviation during a period of startup, shutdown, or malfunction, from an operating limit or from any CPMS requirement for the capture system or add-on control device serving a controlled coating operation, then these data may be used to support and document your request to use these values for that period of deviation.

(3) The organic HAP emission reduction achieved during each period of deviation, including a deviation during a period of startup, shutdown, or malfunction, from an operating limit or from any CPMS requirement for the capture system or add-on control device serving a controlled coating operation for which the Administrator has approved the use of non-zero capture efficiency and add-on control device efficiency values is calculated using Equation 8 of this section.

$$H_{DEV} = \left(A_{DEV} + B_{DEV}\right)\left(\frac{CE_{DEV}}{100}\right)\left(\frac{DRE_{DEV}}{100}\right) \qquad \text{(Eq. 8)}$$

Where:

H_{DEV} = Mass of organic HAP emission reduction achieved during a period of deviation for the controlled coating operation, kg.

A_{DEV} = Total mass of organic HAP in the coatings used in the controlled coating operation during the period of deviation, kg, as calculated in Equation 8A of this section.

B_{DEV} = Total mass of organic HAP in the thinners used in the controlled coating operation during the period of deviation, kg, as calculated in Equation 8B of this section.

CE_{DEV} = Capture efficiency of the emission capture system vented to the add-on control device, approved for the period of deviation, percent.

DRE_{DEV} = Organic HAP destruction or removal efficiency of the add-on control device approved for the period of deviation, percent.

(4) Calculate the total mass of organic HAP in the coatings used in the controlled coating operation during the period of deviation using equation 8A of this section:

sfrattini on LAPJZKW1R2 with $$_JOB
VerDate Sep<11>2014 09:16 Apr 04, 2023 Jkt 256165 PO 00000 Frm 00601 Fmt 8010 Sfmt 8010 Q:\40\256165.XXX PC31
ER26AP04.015</MATH>

$$A_{DEV} = \sum_{i=i}^{m} \left(VOL_{CDEV,i}\right)\left(D_{c,i}\right)\left(W_{c,i}\right) \qquad \text{(Eq. 8A)}$$

Where:

A_{DEV} = Total mass of organic HAP in the coatings used in the controlled coating operation during the period of deviation, kg.

$VOL_{CDEV,\ i}$ = total volume of coating, i, used in the controlled coating operation during the period of deviation, liters.

$D_{c,\ i}$ = Density of coating, i, kg per liter.

$W_{c,\ i}$ = Mass fraction of organic HAP in coating, i, kg per kg.

m = Number of different coatings used.

(5) Calculate the total mass of organic HAP in the thinners used in the controlled coating operation during the period of deviation using equation 8B of this section:

$$B_{DEV} = \sum_{j=i}^{n} \left(VOL_{TDEV,j}\right)\left(D_{t,j}\right)\left(W_{t,j}\right) \qquad \text{(Eq. 8B)}$$

Where:

B_{DEV} = Total mass of organic HAP in the thinners used in the controlled coating operation during the period of deviation, kg.

$VOL_{TDEV,\ j}$ = Total volume of thinner, j, used in the controlled coating operation during the period of deviation, liters.

$D_{t,\ j}$ = Density of thinner, j, kg per liter.

$W_{t,\ j}$ = Mass fraction of organic HAP in thinner, j, kg per kg.

n = Number of different thinners used.

[69 FR 22623, Apr. 26, 2004, as amended at 72 FR 20233, Apr. 24, 2007; 85 FR 41129, July 8, 2020; 86 FR 66040, Nov. 19, 2021]

§ 63.3162 [Reserved]

§ 63.3163 How do I conduct periodic performance tests and demonstrate continuous compliance with the emission limitations?

(a) To demonstrate continuous compliance with the applicable emission limit in § 63.3090(a) or § 63.3091(a), the organic HAP emission rate for each compliance period, determined according to the procedures in § 63.3161, must be equal to or less than the applicable emission limit in § 63.3090(a) or § 63.3091(a). A compliance period consists of 1 month. Each month after the end of the initial compliance period described in § 63.3160 is a compliance period consisting of that month. You must perform the calculations in § 63.3161 on a monthly basis.

(b) If the organic HAP emission rate for any 1 month compliance period exceeded the applicable emission limit in § 63.3090(a) or § 63.3091(a), this is a deviation from the emission limitation for that compliance period and must be reported as specified in §§ 63.3110(c)(6) and 63.3120(a)(6).

(c) You must demonstrate continuous compliance with each operating limit required by § 63.3093 that applies to you, as specified in table 1 to this subpart, and you must conduct performance tests as specified in paragraph (c)(3) of this section.

(1) If an operating parameter is out of the allowed range specified in Table 1 to this subpart, this is a deviation from the operating limit that must be reported as specified in §§ 63.3110(c)(6) and 63.3120(a)(6).

(2) If an operating parameter deviates from the operating limit specified in Table 1 to this subpart, then you must assume that the emission capture system and add-on control device were achieving zero efficiency during the time period of the deviation except as provided in § 63.3161(p).

(3) Except for solvent recovery systems for which you conduct liquid-liquid material balances according to § 63.3161(k) for controlled coating operations, you must conduct periodic performance tests of add-on controls and establish the operating limits required by § 63.3093 within 5 years following the previous performance test. You must conduct the first periodic performance

sfrattini on LAPJZKW1R2 with $$_JOB
VerDate Sep<11>2014 09:16 Apr 04, 2023 Jkt 256165 PO 00000 Frm 00602 Fmt 8010 Sfmt 8010 Q:\40\256165.XXX PC31
ER26AP04.016</MATH> ER26AP04.017</MATH>

test before July 8, 2023, unless you are already required to complete periodic performance tests as a requirement of renewing your facility's operating permit under 40 CFR part 70 or 40 CFR part 71 and have conducted a performance test on or after July 8, 2022. Thereafter you must conduct a performance test no later than 5 years following the previous performance test. Operating limits must be confirmed or reestablished during each performance test. For any control device for which you are using the catalytic oxidizer control option at §63.3167(b) and following the catalyst maintenance procedures in §63.3167(b)(6), you are not required to conduct periodic control device performance testing as specified by this paragraph. For any control device for which instruments are used to continuously measure organic compound emissions, you are not required to conduct periodic control device performance testing as specified by this paragraph. The requirements of this paragraph do not apply to measuring emission capture system efficiency.

(d) You must meet the requirements for bypass lines in §63.3168(b) for control devices other than solvent recovery systems for which you conduct liquid-liquid material balances. If any bypass line is opened and emissions are diverted to the atmosphere when the coating operation is running, this is a deviation that must be reported as specified in §§63.3110(c)(6) and 63.3120(a)(6). For the purposes of completing the compliance calculations specified in §63.3161(k), you must assume that the emission capture system and add-on control device were achieving zero efficiency during the time period of the deviation.

(e) You must demonstrate continuous compliance with the work practice standards in §63.3094. If you did not develop a work practice plan, if you did not implement the plan, or if you did not keep the records required by §63.3130(n), this is a deviation from the work practice standards that must be reported as specified in §§63.3110(c)(6) and 63.3120(a)(6).

(f) If there were no deviations from the emission limitations, submit a statement as part of the semiannual compliance report that you were in compliance with the emission limitations during the reporting period because the organic HAP emission rate for each compliance period was less than or equal to the applicable emission limit in §63.3090(a) or §63.3091(a), §63.3090(b) or §63.3091(b), or §63.3092(a) or §63.3092(b), you achieved the operating limits required by §63.3093, and you achieved the work practice standards required by §63.3094 during each compliance period.

(g) [Reserved]

(h) Before January 5, 2021, consistent with §§63.6(e) and 63.7(e)(1), deviations that occur during a period of SSM of the emission capture system, add-on control device, or coating operation that may affect emission capture or control device efficiency are not violations if you demonstrate to the Administrator's satisfaction that you were operating in accordance with §63.6(e)(1). The Administrator will determine whether deviations that occur during a period you identify as a SSM are violations according to the provisions in §63.6(e). On and after January 5, 2021, the provisions of this paragraph no longer apply.

(i) [Reserved]

(j) You must maintain records as specified in §§63.3130 and 63.3131.

[69 FR 22623, Apr. 26, 2004, as amended at 71 FR 20464, Apr. 20, 2006; 85 FR 41130, July 8, 2020]

§63.3164 What are the general requirements for performance tests?

(a) You must conduct each applicable performance test required by §§63.3160, 63.3163, and 63.3171 according to the requirements in §63.7(e)(1) and under the conditions in this section unless you obtain a waiver of the performance test according to the provisions in §63.7(h).

(1) *Representative coating operation operating conditions.* You must conduct the performance test under representative operating conditions for the coating operation. Before January 5, 2021, operations during periods of SSM, and during periods of nonoperation do not constitute representative conditions. You must record the process information that is necessary to document operating conditions during the test and explain why the conditions represent

sfrattini on LAPJZKW1R2 with $$_JOB
VerDate Sep<11>2014 09:16 Apr 04, 2023 Jkt 256165 PO 00000 Frm 00603 Fmt 8010 Sfmt 8010 Q:\40\256165.XXX PC31

normal operation. On and after January 5, 2021, operations during periods of startup, shutdown, or nonoperation do not constitute representative conditions for purposes of conducting a performance test. The owner or operator may not conduct performance tests during periods of malfunction. You must record the process information that is necessary to document operating conditions during the test and explain why the conditions represent normal operation. Upon request, you must make available to the Administrator such records as may be necessary to determine the conditions of performance tests.

(2) *Representative emission capture system and add-on control device operating conditions.* You must conduct the performance test when the emission capture system and add-on control device are operating at a representative flow rate, and the add-on control device is operating at a representative inlet concentration. You must record information that is necessary to document emission capture system and add-on control device operating conditions during the test and explain why the conditions represent normal operation.

(b) You must conduct each performance test of an emission capture system according to the requirements in § 63.3165. You must conduct each performance test of an add-on control device according to the requirements in § 63.3166.

[69 FR 22623, Apr. 26, 2004, as amended at 85 FR 41130, July 8, 2020]

§ 63.3165 How do I determine the emission capture system efficiency?

You must use the procedures and test methods in this section to determine capture efficiency as part of the performance test required by §§ 63.3160 and 63.3163. For purposes of this subpart, a spray booth air seal is not considered a natural draft opening in a PTE or a temporary total enclosure provided you demonstrate that the direction of air movement across the interface between the spray booth air seal and the spray booth is into the spray booth. For purposes of this subpart, a bake oven air seal is not considered a natural draft opening in a PTE or a temporary total enclosure provided you demonstrate that the direction of air movement across the interface between the bake oven air seal and the bake oven is into the bake oven. You may use lightweight strips of fabric or paper, or smoke tubes to make such demonstrations as part of showing that your capture system is a PTE or conducting a capture efficiency test using a temporary total enclosure. You cannot count air flowing from a spray booth air seal into a spray booth as air flowing through a natural draft opening into a PTE or into a temporary total enclosure unless you elect to treat that spray booth air seal as a natural draft opening. You cannot count air flowing from a bake oven air seal into a bake oven as air flowing through a natural draft opening into a PTE or into a temporary total enclosure unless you elect to treat that bake oven air seal as a natural draft opening.

(a) *Assuming 100 percent capture efficiency.* You may assume the capture system efficiency is 100 percent if both of the conditions in paragraphs (a)(1) and (2) of this section are met:

(1) The capture system meets the criteria in Method 204 of appendix M to 40 CFR part 51 for a PTE and directs all the exhaust gases from the enclosure to an add-on control device.

(2) All coatings and thinners used in the coating operation are applied within the capture system, and coating solvent flash-off and coating curing and drying occurs within the capture system. For example, this criterion is not met if parts enter the open shop environment when being moved between a spray booth and a curing oven.

(b) *Measuring capture efficiency.* If the capture system does not meet both of the criteria in paragraphs (a)(1) and (2) of this section, then you must use one of the five procedures described in paragraphs (c) through (g) of this section to measure capture efficiency. The capture efficiency measurements use TVH capture efficiency as a surrogate for organic HAP capture efficiency. For the protocols in paragraphs (c) and (d) of this section, the capture efficiency measurement must consist of three test runs. Each test run must be at least 3 hours duration or the length of a production run, whichever is longer, up to 8 hours. For the purposes of this

sfrattini on LAPJZKW1R2 with $$_JOB
VerDate Sep<11>2014 09:16 Apr 04, 2023 Jkt 256165 PO 00000 Frm 00604 Fmt 8010 Sfmt 8010 Q:\40\256165.XXX PC31

test, a production run means the time required for a single part to go from the beginning to the end of production, which includes surface preparation activities and drying or curing time.

(c) *Liquid-to-uncaptured-gas protocol using a temporary total enclosure or building enclosure.* The liquid-to-uncaptured-gas protocol compares the mass of liquid TVH in materials used in the coating operation to the mass of TVH emissions not captured by the emission capture system. Use a temporary total enclosure or a building enclosure and the procedures in paragraphs (c)(1) through (6) of this section to measure emission capture system efficiency using the liquid-to-uncaptured-gas protocol.

(1) Either use a building enclosure or construct an enclosure around the coating operation where coatings and thinners are applied, and all areas where emissions from these applied coatings and thinners subsequently occur, such as flash-off, curing, and drying areas. The areas of the coating operation where capture devices collect emissions for routing to an add-on control device, such as the entrance and exit areas of an oven or spray booth, must also be inside the enclosure. The enclosure must meet the applicable definition of a temporary total enclosure or building enclosure in Method 204 of appendix M to 40 CFR part 51.

(2) Use Method 204A or F of appendix M to 40 CFR part 51 to determine the mass fraction of TVH liquid input from each coating and thinner used in the coating operation during each capture efficiency test run. To make the determination, substitute TVH for each occurrence of the term volatile organic compounds (VOC) in the methods.

(3) Use Equation 1 of this section to calculate the total mass of TVH liquid input from all the coatings and thinners used in the coating operation during each capture efficiency test run.

$$TVH_{used} = \sum_{i=1}^{n} (TVH_i)(Vol_i)(D_i) \qquad \text{(Eq. 1)}$$

Where:

TVH_i = Mass fraction of TVH in coating or thinner, i, used in the coating operation during the capture efficiency test run, kg TVH per kg material.

Vol_i = Total volume of coating or thinner, i, used in the coating operation during the capture efficiency test run, liters.

D_i = Density of coating or thinner, i, kg material per liter material.

n = Number of different coatings and thinners used in the coating operation during the capture efficiency test run.

(4) Use Method 204D or E of appendix M to 40 CFR part 51 to measure the total mass, kg, of TVH emissions that are not captured by the emission capture system; they are measured as they exit the temporary total enclosure or building enclosure during each capture efficiency test run. To make the measurement, substitute TVH for each occurrence of the term VOC in the methods.

(i) Use Method 204D if the enclosure is a temporary total enclosure.

(ii) Use Method 204E if the enclosure is a building enclosure. During the capture efficiency measurement, all organic compound emitting operations inside the building enclosure, other than the coating operation for which capture efficiency is being determined, must be shut down, but all fans and blowers must be operating normally.

(5) For each capture efficiency test run, determine the percent capture efficiency of the emission capture system using Equation 2 of this section:

$$CE = \frac{(TVH_{used} - TVH_{uncaptured})}{TVH_{used}} \times 100 \qquad \text{(Eq. 2)}$$

sfrattini on LAPJZKW1R2 with $$_JOB
VerDate Sep<11>2014 09:16 Apr 04, 2023 Jkt 256165 PO 00000 Frm 00605 Fmt 8010 Sfmt 8006 Q:\40\256165.XXX PC31
ER26AP04.018</MATH> ER26AP04.019</MATH>

Where:

CE = Capture efficiency of the emission capture system vented to the add-on control device, percent.

TVH_{used} = Total mass of TVH liquid input used in the coating operation during the capture efficiency test run, kg.

$TVH_{uncaptured}$ = Total mass of TVH that is not captured by the emission capture system and that exits from the temporary total enclosure or building enclosure during the capture efficiency test run, kg.

(6) Determine the capture efficiency of the emission capture system as the average of the capture efficiencies measured in the three test runs.

(d) *Gas-to-gas protocol using a temporary total enclosure or a building enclosure.* The gas-to-gas protocol compares the mass of TVH emissions captured by the emission capture system to the mass of TVH emissions not captured. Use a temporary total enclosure or a building enclosure and the procedures in paragraphs (d)(1) through (5) of this section to measure emission capture system efficiency using the gas-to-gas protocol.

(1) Either use a building enclosure or construct an enclosure around the coating operation where coatings and thinners are applied, and all areas where emissions from these applied coatings and thinners subsequently occur, such as flash-off, curing, and drying areas. The areas of the coating operation where capture devices collect emissions generated by the coating operation for routing to an add-on control device, such as the entrance and exit areas of an oven or a spray booth, must also be inside the enclosure. The enclosure must meet the applicable definition of a temporary total enclosure or building enclosure in Method 204 of appendix M to 40 CFR part 51.

(2) Use Method 204B or C of appendix M to 40 CFR part 51 to measure the total mass, kg, of TVH emissions captured by the emission capture system during each capture efficiency test run as measured at the inlet to the add-on control device. To make the measurement, substitute TVH for each occurrence of the term VOC in the methods.

(i) The sampling points for the Method 204B or C measurement must be upstream from the add-on control device and must represent total emissions routed from the capture system and entering the add-on control device.

(ii) If multiple emission streams from the capture system enter the add-on control device without a single common duct, then the emissions entering the add-on control device must be simultaneously or sequentially measured in each duct, and the total emissions entering the add-on control device must be determined.

(3) Use Method 204D or E of appendix M to 40 CFR part 51 to measure the total mass, kg, of TVH emissions that are not captured by the emission capture system; they are measured as they exit the temporary total enclosure or building enclosure during each capture efficiency test run. To make the measurement, substitute TVH for each occurrence of the term VOC in the methods.

(i) Use Method 204D if the enclosure is a temporary total enclosure.

(ii) Use Method 204E if the enclosure is a building enclosure. During the capture efficiency measurement, all organic compound emitting operations inside the building enclosure, other than the coating operation for which capture efficiency is being determined, must be shut down, but all fans and blowers must be operating normally.

(4) For each capture efficiency test run, determine the percent capture efficiency of the emission capture system using Equation 3 of this section:

$$CE = \frac{TVH_{captured}}{\left(TVH_{captured} + TVH_{uncaptured}\right)} \times 100 \qquad \text{(Eq. 3)}$$

Where:

CE = Capture efficiency of the emission capture system vented to the add-on control device, percent.

sfrattini on LAPJZKW1R2 with $$_JOB
VerDate Sep<11>2014 09:16 Apr 04, 2023 Jkt 256165 PO 00000 Frm 00606 Fmt 8010 Sfmt 8010 Q:\40\256165.XXX PC31
ER26AP04.020</MATH>

$TVH_{captured}$ = Total mass of TVH captured by the emission capture system as measured at the inlet to the add-on control device during the emission capture efficiency test run, kg.

$TVH_{uncaptured}$ = Total mass of TVH that is not captured by the emission capture system and that exits from the temporary total enclosure or building enclosure during the capture efficiency test run, kg.

(5) Determine the capture efficiency of the emission capture system as the average of the capture efficiencies measured in the three test runs.

(e) *Panel testing to determine the capture efficiency of flash-off or bake oven emissions.* You may conduct panel testing to determine the capture efficiency of flash-off or bake oven emissions using ASTM Method D5087–02, ''Standard Test Method for Determining Amount of Volatile Organic Compound (VOC) Released from Solventborne Automotive Coatings and Available for Removal in a VOC Control Device (Abatement)'' (incorporated by reference, *see* §63.14), ASTM Method D6266–00a (2017), ''Test Method for Determining the Amount of Volatile Organic Compound (VOC) Released from Waterborne Automotive Coatings and Available for Removal in a VOC Control Device (Abatement)'' (incorporated by reference, *see* §63.14), or the guidelines presented in ''Protocol for Determining the Daily Volatile Organic Compound Emission Rate of Automobile and Light-Duty Truck Primer-Surfacer and Topcoat'' EPA–453/R–08–002 (incorporated by reference, *see* §63.14). You may conduct panel testing on representative coatings as described in ''Protocol for Determining the Daily Volatile Organic Compound Emission Rate of Automobile and Light-Duty Truck Primer-Surfacer and Topcoat'' EPA–453/R–08–002 (incorporated by reference, *see* §63.14).

(1) Calculate the volume of coating solids deposited per volume of coating used for coating, i, or the composite volume of coating solids deposited per volume of coating used for the group of coatings including coating, i, used during the month in the spray booth(s) preceding the flash-off area or bake oven for which the panel test is conducted using Equation 5 of this section:

$$V_{sdep,i} = \left(V_{s,i}\right)\left(TE_{c,i}\right) \qquad \text{(Eq. 5)}$$

Where:

$V_{sdep,\ i}$ = Volume of coating solids deposited per volume of coating used for coating, i, or composite volume of coating solids deposited per volume of coating used for the group of coatings including coating, i, in the spray booth(s) preceding the flash-off area or bake oven for which the panel test is conducted, liter of coating solids deposited per liter of coating used.

$V_{s,\ i}$ = Volume fraction of coating solids for coating, i, or average volume fraction of coating solids for the group of coatings including coating, i, liter coating solids per liter coating, determined according to §63.3161(f).

$TE_{c,\ i}$ = Transfer efficiency of coating, i, or average transfer efficiency for the group of coatings including coating, i, in the spray booth(s) for the flash-off area or bake oven for which the panel test is conducted determined according to §63.3161(g), expressed as a decimal, for example 60 percent must be expressed as 0.60. (Transfer efficiency also may be determined by testing representative coatings. The same coating groupings may be appropriate for both transfer efficiency testing and panel testing. In this case, all of the coatings in a panel test grouping would have the same transfer efficiency.)

(2) Calculate the mass of VOC per volume of coating for coating, i, or the composite mass of VOC per volume of coating for the group of coatings including coating, i, used during the month in the spray booth(s) preceding the flash-off area or bake oven for which the panel test is conducted, kg, using Equation 6 of this section:

$$VOC_i = \left(D_{c,\ i}\right)\left(Wvoc_{c,\ i}\right) \qquad \text{(Eq. 6)}$$

Where:

VOC_i = Mass of VOC per volume of coating for coating, i, or composite mass of VOC per volume of coating for the group of coatings including coating, i, used during the month in the spray booth(s) preceding the flash-off area or bake oven for which the panel test is conducted, kg VOC per liter coating.

$D_{c,i}$ = Density of coating, i, or average density of the group of coatings, including coating, i, kg coating per liter coating, density determined according to §63.3151(b).

$Wvoc_{c,i}$ = Mass fraction of VOC in coating, i, or average mass fraction of VOC for the group of coatings, including coating, i,

sfrattini on LAPJZKW1R2 with $$_JOB
VerDate Sep<11>2014 09:16 Apr 04, 2023 Jkt 256165 PO 00000 Frm 00607 Fmt 8010 Sfmt 8010 Q:\40\256165.XXX PC31
ER26AP04.022</MATH> ER24AP07.003</MATH>

kg VOC per kg coating, determined by EPA Method 24 (appendix A–7 to 40 CFR part 60) or the guidelines for combining analytical VOC content and formulation solvent content presented in Section 9 of ''Protocol for Determining the Daily Volatile Organic Compound Emission Rate of Automobile and Light-Duty Truck Primer-Surfacer and Topcoat,'' EPA–453/R–08–002 (incorporated by reference, *see* § 63.14).

(3) As an alternative, you may choose to express the results of your panel tests in units of mass of VOC per mass of coating solids deposited and convert such results to a percent using Equation 7 of this section. If you panel test representative coatings, then you may convert the panel test result for each representative coating either to a unique percent capture efficiency for each coating grouped with that representative coating by using coating specific values for the mass of coating solids deposited per mass of coating used, mass fraction VOC, transfer efficiency, and mass fraction solids in Equations 7 and 8 of this section; or to a composite percent capture efficiency for the group of coatings by using composite values for the group of coatings for the mass of coating solids deposited per mass of coating used and average values for the mass of VOC per volume of coating, average values for the group of coatings for mass fraction VOC, transfer efficiency, and mass fraction solids in Equations 7 and 8 of this section. If you panel test each coating, then you must convert the panel test result for each coating to a unique percent capture efficiency for that coating by using coating specific values for the mass of coating solids deposited per mass of coating used, mass fraction VOC, transfer efficiency, and mass fraction solids in Equations 7 and 8 of this section. Panel test results expressed in units of mass of VOC per mass of coating solids deposited must be converted to percent capture efficiency using Equation 7 of this section:

$$CE_i = \left(P_{m,\,i}\right)\left(W_{sdep,\,i}\right)(100)/\left(Wvoc_{c,\,i}\right) \qquad \text{(Eq. 7)}$$

Where:

CE_i = Capture efficiency for coating, i, or for the group of coatings including coating, i, for the flash-off area or bake oven for which the panel test is conducted, percent.

$P_{m,i}$ = Panel test result for coating, i, or for the coating representing coating, i, in the panel test, kg of VOC per kg of coating solids deposited.

$W_{sdep,i}$ = Mass of coating solids deposited per mass of coating used for coating, i, or composite mass of coating solids deposited per mass of coating used for the group of coatings, including coating, i, in the spray booth(s) preceding the flash-off area or bake oven for which the panel test is conducted, kg of solids deposited per kg of coating used, from Equation 8 of this section.

$Wvoc_{c,i}$ = Mass fraction of VOC in coating, i, or average mass fraction of VOC for the group of coatings, including coating, i, kg VOC per kg coating, determined by EPA Method 24 (appendix A–7 to 40 CFR part 60) or the guidelines for combining analytical VOC content and formulation solvent content presented in Section 9 of ''Protocol for Determining the Daily Volatile Organic Compound Emission Rate of Automobile and Light-Duty Truck Primer-Surfacer and Topcoat,'' EPA–453/R–08–002 (incorporated by reference, *see* § 63.14).

(4) Calculate the mass of coating solids deposited per mass of coating used for each coating or the composite mass of coating solids deposited per mass of coating used for each group of coatings used during the month in the spray booth(s) preceding the flash-off area or bake oven for which the panel test is conducted using Equation 8 of this section:

$$W_{sdep,i} = \left(W_{s,i}\right)\left(TE_{c,i}\right) \qquad \text{(Eq. 8)}$$

Where:

$W_{sdep,\ i}$ = Mass of coating solids deposited per mass of coating used for coating, i, or composite mass of coating solids deposited per mass of coating used for the group of coatings including coating, i, in the spray booth(s) preceding the flash-off area or bake oven for which the panel test is conducted, kg coating solids deposited per kg coating used.

$W_{s,\ i}$ = Mass fraction of coating solids for coating, i, or average mass fraction of coating solids for the group of coatings including coating, i, kg coating solids per kg coating, determined by EPA Method 24 (appendix A–7 to 40 CFR part 60) or the guidelines for combining analytical VOC content and formulation solvent content presented in ''Protocol for Determining the Daily Volatile Organic Compound Emission Rate of Automobile and Light-

sfrattini on LAPJZKW1R2 with $$_JOB
VerDate Sep<11>2014 09:16 Apr 04, 2023 Jkt 256165 PO 00000 Frm 00608 Fmt 8010 Sfmt 8010 Q:\40\256165.XXX PC31
ER24AP07.004</MATH> ER26AP04.025</MATH>

Duty Truck Primer-Surfacer and Topcoat,'' EPA–453/R–08–002 (incorporated by reference, *see* §63.14).

$TE_{c,i}$ = Transfer efficiency of coating, i, or average transfer efficiency for the group of coatings including coating, i, in the spray booth(s) for the flash-off area or bake oven for which the panel test is conducted determined according to §63.3161(g), expressed as a decimal, for example 60 percent must be expressed as 0.60. (Transfer efficiency also may be determined by testing representative coatings. The same coating groupings may be appropriate used for both transfer efficiency testing and panel testing. In this case, all of the coatings in a panel test grouping would have the same transfer efficiency.)

(f) *Alternative capture efficiency procedure.* As an alternative to the procedures specified in paragraphs (c) through (e) and (g) of this section, you may determine capture efficiency using any other capture efficiency protocol and test methods that satisfy the criteria of either the DQO or LCL approach as described in appendix A to subpart KK of this part.

(g) *Panel testing to determine the capture efficiency of spray booth emissions from solvent-borne coatings.* You may conduct panel testing to determine the capture efficiency of spray booth emissions from solvent-borne coatings using the procedure in appendix A to this subpart.

[69 FR 22623, Apr. 26, 2004, as amended at 72 FR 20234, Apr. 24, 2007; 85 FR 41131, July 8, 2020; 86 FR 66040, Nov. 19, 2021]

§63.3166 How do I determine the add-on control device emission destruction or removal efficiency?

You must use the procedures and test methods in this section to determine the add-on control device emission destruction or removal efficiency as part of the performance test required by §63.3160, §63.3163, or §63.3171. You must conduct three test runs as specified in §63.7(e)(3), and each test run must last at least 1 hour.

(a) For all types of add-on control devices, use the test methods specified in paragraphs (a)(1) through (5) of this section.

(1) Use EPA Method 1 or 1A of appendix A–1 to 40 CFR part 60, as appropriate, to select sampling sites and velocity traverse points.

(2) Use EPA Method 2, 2A, 2C, 2D, or 2F of appendix A–1, or 2G of appendix A–2 to 40 CFR part 60, as appropriate, to measure gas volumetric flow rate.

(3) Use EPA Method 3, 3A, or 3B of appendix A–2 to 40 CFR part 60, as appropriate, for gas analysis to determine dry molecular weight. The ANSI/ASME PTC 19.10–1981 (incorporated by reference, *see* §63.14), may be used as an alternative to EPA Method 3B.

(4) Use EPA Method 4 of appendix A–3 to 40 CFR part 60 to determine stack gas moisture.

(5) Methods for determining gas volumetric flow rate, dry molecular weight, and stack gas moisture must be performed, as applicable, during each test run.

(b) Measure total gaseous organic mass emissions as carbon at the inlet and outlet of the add-on control device simultaneously, using either EPA Method 25 or 25A of appendix A–7 to 40 CFR part 60, as specified in paragraphs (b)(1) through (4) of this section. You must use the same method for both the inlet and outlet measurements.

(1) Use Method 25 if the add-on control device is an oxidizer and you expect the total gaseous organic concentration as carbon to be more than 50 parts per million by volume (ppmv) at the control device outlet.

(2) Use Method 25A if the add-on control device is an oxidizer and you expect the total gaseous organic concentration as carbon to be 50 ppmv or less at the control device outlet.

(3) Use Method 25A if the add-control device is not an oxidizer.

(4) You may use EPA Method 18 of appendix A–6 to 40 CFR part 60 to subtract methane emissions from measured total gaseous organic mass emissions as carbon.

(c) If two or more add-on control devices are used for the same emission stream, then you must measure emissions at the outlet of each device. For example, if one add-on control device is a concentrator with an outlet for the high-volume, dilute stream that has been treated by the concentrator, and a second add-on control device is an oxidizer with an outlet for the low-volume, concentrated stream that is treated with the oxidizer, you must measure emissions at the outlet of the

sfrattini on LAPJZKW1R2 with $$_JOB
VerDate Sep<11>2014 09:16 Apr 04, 2023 Jkt 256165 PO 00000 Frm 00609 Fmt 8010 Sfmt 8010 Q:\40\256165.XXX PC31

oxidizer and the high volume dilute stream outlet of the concentrator.

(d) For each test run, determine the total gaseous organic emissions mass flow rates for the inlet and the outlet of the add-on control device, using Equation 1 of this section. If there is more than one inlet or outlet to the add-on control device, you must calculate the total gaseous organic mass flow rate using Equation 1 of this section for each inlet and each outlet and then total all of the inlet emissions and total all of the outlet emissions.

$$M_f = Q_{sd} C_c (12)(0.0416)(10^{-6}) \qquad \text{(Eq. 1)}$$

Where:

M_f = Total gaseous organic emissions mass flow rate, kg per hour (kg/h).

C_c = Concentration of organic compounds as carbon in the vent gas, as determined by Method 25 or Method 25A, ppmv, dry basis.

Q_{sd} = Volumetric flow rate of gases entering or exiting the add-on control device, as determined by Method 2, 2A, 2C, 2D, 2F, or 2G, dry standard cubic meters per hour (dscm/h).

0.0416 = Conversion factor for molar volume, kg-moles per cubic meter (mol/m^3) (@ 293 Kelvin (K) and 760 millimeters of mercury (mmHg)).

(e) For each test run, determine the add-on control device organic emissions destruction or removal efficiency using Equation 2 of this section:

$$DRE = \frac{M_{fi} - M_{fo}}{M_{f_i}}(100) \qquad \text{(Eq. 2)}$$

Where:

DRE = Organic emissions destruction or removal efficiency of the add-on control device, percent.

M_{fi} = Total gaseous organic emissions mass flow rate at the inlet(s) to the add-on control device, using Equation 1 of this section, kg/h.

M_{fo} = Total gaseous organic emissions mass flow rate at the outlet(s) of the add-on control device, using Equation 1 of this section, kg/h.

(f) Determine the emission destruction or removal efficiency of the add-on control device as the average of the efficiencies determined in the three test runs and calculated in Equation 2 of this section.

[69 FR 22623, Apr. 26, 2004, as amended at 85 FR 41131, July 8, 2020]

§ 63.3167 How do I establish the add-on control device operating limits during performance tests?

During the performance tests required by §§ 63.3160, 63.3163, and 63.3171 (and described in §§ 63.3164 and 63.3166), you must establish the operating limits required by § 63.3093 according to this section, unless you have received approval for alternative monitoring and operating limits under § 63.8(f) as specified in § 63.3093.

(a) *Thermal oxidizers.* If your add-on control device is a thermal oxidizer, establish the operating limit according to paragraphs (a)(1) through (3) of this section.

(1) During the performance test, you must monitor and record the combustion temperature at least once every 15 minutes during each of the three test runs. You must monitor the temperature in the firebox of the thermal oxidizer or immediately downstream of the firebox before any substantial heat exchange occurs.

(2) Use all valid data collected during the performance test to calculate and record the average combustion temperature maintained during the performance test. This average combustion temperature is the minimum 3-hour average operating limit for your thermal oxidizer.

(3) As an alternative, if the latest operating permit issued before April 26, 2007, for the thermal oxidizer at your facility contains recordkeeping and reporting requirements for the combustion temperature that are consistent with the requirements for thermal oxidizers in 40 CFR 60.395(c), then you may set the minimum operating limit for the combustion temperature for each such thermal oxidizer at your affected source at 28 degrees Celsius (50 degrees Fahrenheit) below the average combustion temperature during the performance test of that thermal oxidizer. If you do not have an operating permit for the thermal oxidizer at your facility and the latest construction permit issued before April 26, 2007, for the thermal oxidizer at your facility

sfrattini on LAPJZKW1R2 with $$_JOB
VerDate Sep<11>2014 09:16 Apr 04, 2023 Jkt 256165 PO 00000 Frm 00610 Fmt 8010 Sfmt 8010 Q:\40\256165.XXX PC31
ER26AP04.026</MATH> ER26AP04.027</MATH>

contains recordkeeping and reporting requirements for the combustion temperature that are consistent with the requirements for thermal oxidizers in 40 CFR 60.395(c), then you may set the minimum operating limit for the combustion temperature for each such thermal oxidizer at your affected source at 28 degrees Celsius (50 degrees Fahrenheit) below the average combustion temperature during the performance test of that thermal oxidizer. If you use 28 degrees Celsius (50 degrees Fahrenheit) below the combustion temperature maintained during the performance test as the minimum operating limit for a thermal oxidizer, then you must keep the combustion temperature set point on that thermal oxidizer no lower than 14 degrees Celsius (25 degrees Fahrenheit) below the lower of that set point during the performance test for that thermal oxidizer and the average combustion temperature maintained during the performance test for that thermal oxidizer.

(b) *Catalytic oxidizers*. If your add-on control device is a catalytic oxidizer, establish the operating limits according to either paragraphs (b)(1) through (3) or paragraphs (b)(4) through (6) of this section.

(1) During the performance test, you must monitor and record the temperature just before the catalyst bed and the temperature difference across the catalyst bed at least once every 15 minutes during each of the three test runs.

(2) Use all valid data collected during the performance test to calculate and record the average temperature just before the catalyst bed and the average temperature difference across the catalyst bed maintained during the performance test. The minimum 3-hour average operating limits for your catalytic oxidizer are the average temperature just before the catalyst bed maintained during the performance test of that catalytic oxidizer and 80 percent of the average temperature difference across the catalyst bed maintained during the performance test of that catalytic oxidizer, except during periods of low production, the latter minimum operating limit is to maintain a positive temperature gradient across the catalyst bed. A low production period is when production is less than 80 percent of production rate during the performance test of that catalytic oxidizer.

(3) As an alternative, if the latest operating permit issued before April 26, 2007, for the catalytic oxidizer at your facility contains recordkeeping and reporting requirements for the temperature before the catalyst bed that are consistent with the requirements for catalytic oxidizers in 40 CFR 60.395(c), then you may set the minimum operating limits for each such catalytic oxidizer at your affected source at 28 degrees Celsius (50 degrees Fahrenheit) below the average temperature just before the catalyst bed maintained during the performance test for that catalytic oxidizer and 80 percent of the average temperature difference across the catalyst bed maintained during the performance test for that catalytic oxidizer, except during periods of low production the latter minimum operating limit is to maintain a positive temperature gradient across the catalyst bed. If you do not have an operating permit for the catalytic oxidizer at your facility and the latest construction permit issued before April 26, 2007, for the catalytic oxidizer at your facility contains recordkeeping and reporting requirements for the temperature before the catalyst bed that are consistent with the requirements for catalytic oxidizers in 40 CFR 60.395(c), then you may set the minimum operating limits for each such catalytic oxidizer at your affected source at 28 degrees Celsius (50 degrees Fahrenheit) below the average temperature just before the catalyst bed maintained during the performance test for that catalytic oxidizer and 80 percent of the average temperature difference across the catalyst bed maintained during the performance test for that catalytic oxidizer, except during periods of low production the latter minimum operating limit is to maintain a positive temperature gradient across the catalyst bed. A low production period is when production is less than 80 percent of production rate during the performance test. If you use 28 degrees Celsius

sfrattini on LAPJZKW1R2 with $$_JOB
VerDate Sep<11>2014 09:16 Apr 04, 2023 Jkt 256165 PO 00000 Frm 00611 Fmt 8010 Sfmt 8010 Q:\40\256165.XXX PC31

(50 degrees Fahrenheit) below the average temperature just before the catalyst bed maintained during the performance test as the minimum operating limits for a catalytic oxidizer, then you must keep the set point for the temperature just before the catalyst bed on that catalytic oxidizer no lower than 14 degrees Celsius (25 degrees Fahrenheit) below the lower of that set point during the performance test for that catalytic oxidizer and the average temperature just before the catalyst bed maintained during the performance test for that catalytic oxidizer.

(4) As an alternative to monitoring the temperature difference across the catalyst bed, you may monitor the temperature at the inlet to the catalyst bed and implement a site-specific inspection and maintenance plan for your catalytic oxidizer as specified in paragraph (b)(6) of this section. During the performance test, you must monitor and record the temperature just before the catalyst bed at least once every 15 minutes during each of the three test runs. Use all valid data collected during the performance test to calculate and record the average temperature just before the catalyst bed during the performance test. This is the minimum operating limit for your catalytic oxidizer.

(5) If the latest operating permit issued before April 26, 2007, for the catalytic oxidizer at your facility contains recordkeeping and reporting requirements for the temperature before the catalyst bed that are consistent with the requirements for catalytic oxidizers in 40 CFR 60.395(c), then you may set the minimum operating limit for each such catalytic oxidizer at your affected source at 28 degrees Celsius (50 degrees Fahrenheit) below the average temperature just before the catalyst bed maintained during the performance test for that catalytic oxidizer. If you do not have an operating permit for the catalytic oxidizer at your facility and the latest construction permit issued before April 26, 2007, for the catalytic oxidizer at your facility contains recordkeeping and reporting requirements for the temperature before the catalyst bed that are consistent with the requirements for catalytic oxidizers in 40 CFR 60.395(c), then you may set the minimum operating limit for each such catalytic oxidizer at your affected source at 28 degrees Celsius (50 degrees Fahrenheit) below the average temperature just before the catalyst bed maintained during the performance test for that catalytic oxidizer. If you use 28 degrees Celsius (50 degrees Fahrenheit) below the average temperature just before the catalyst bed maintained during the performance test as the minimum operating limit for a catalytic oxidizer, then you must keep the set point for the temperature just before the catalyst bed on that catalytic oxidizer no lower than 14 degrees Celsius (25 degrees Fahrenheit) below the lower of that set point during the performance test for that catalytic oxidizer and the average temperature just before the catalyst bed maintained during the performance test for that catalytic oxidizer.

(6) You must develop and implement an inspection and maintenance plan for your catalytic oxidizer(s) for which you elect to monitor according to paragraph (b)(4) or (b)(5) of this section. The plan must address, at a minimum, the elements specified in paragraphs (b)(6)(i) through (iii) of this section.

(i) Annual sampling and analysis of the catalyst activity (*i.e.*, conversion efficiency) following the manufacturer's or catalyst supplier's recommended procedures. If problems are found during the catalyst activity test, you must replace the catalyst bed or take other corrective action consistent with the manufacturer's recommendations.

(ii) Monthly external inspection of the catalytic oxidizer system, including the burner assembly and fuel supply lines for problems and, as necessary, adjust the equipment to assure proper air-to-fuel mixtures.

(iii) Annual internal inspection of the catalyst bed to check for channeling, abrasion, and settling. If problems are found during the annual internal inspection of the catalyst, you must replace the catalyst bed or take other corrective action consistent with the manufacturer's recommendations. If the catalyst bed is replaced and is not of like or better kind and quality as

sfrattini on LAPJZKW1R2 with $$_JOB
VerDate Sep<11>2014 09:16 Apr 04, 2023 Jkt 256165 PO 00000 Frm 00612 Fmt 8010 Sfmt 8010 Q:\40\256165.XXX PC31

the old catalyst, then you must conduct a new performance test to determine destruction efficiency according to §63.3166. If a catalyst bed is replaced and the replacement catalyst is of like or better kind and quality as the old catalyst, then a new performance test to determine destruction efficiency is not required and you may continue to use the previously established operating limits for that catalytic oxidizer.

(c) *Regenerative carbon adsorbers.* If your add-on control device is a regenerative carbon adsorber, establish the operating limits according to paragraphs (c)(1) and (2) of this section.

(1) You must monitor and record the total regeneration desorbing gas (*e.g.*, steam or nitrogen) mass flow for each regeneration cycle and the carbon bed temperature after each carbon bed regeneration and cooling cycle for the regeneration cycle either immediately preceding or immediately following the performance test.

(2) The operating limits for your carbon adsorber are the minimum total desorbing gas mass flow recorded during the regeneration cycle and the maximum carbon bed temperature recorded after the cooling cycle.

(d) *Condensers.* If your add-on control device is a condenser, establish the operating limits according to paragraphs (d)(1) and (2) of this section.

(1) During the performance test, you must monitor and record the condenser outlet (product side) gas temperature at least once every 15 minutes during each of the three test runs.

(2) Use all valid data collected during the performance test to calculate and record the average condenser outlet (product side) gas temperature maintained during the performance test. This average condenser outlet gas temperature is the maximum 3-hour average operating limit for your condenser.

(e) *Concentrators.* If your add-on control device includes a concentrator, you must establish operating limits for the concentrator according to paragraphs (e)(1) and (2)of this section.

(1) During the performance test, you must monitor and record the desorption gas inlet temperature at least once every 15 minutes during each of the three runs of the performance test.

(2) Use all valid data collected during the performance test to calculate and record the average desorption gas inlet temperature. The minimum operating limit for the concentrator is 8 degrees Celsius (15 degrees Fahrenheit) below the average desorption gas inlet temperature maintained during the performance test for that concentrator. You must keep the set point for the desorption gas inlet temperature no lower than 6 degrees Celsius (10 degrees Fahrenheit) below the lower of that set point during the performance test for that concentrator and the average desorption gas inlet temperature maintained during the performance test for that concentrator.

(f) *Emission capture systems.* For each capture device that is not part of a PTE that meets the criteria of §63.3165(a) and that is not capturing emissions from a downdraft spray booth or from a flash-off area or bake oven associated with a downdraft spray booth, establish an operating limit for either the gas volumetric flow rate or duct static pressure, as specified in paragraphs (f)(1) and (2) of this section. The operating limit for a PTE is specified in Table 1 to this subpart.

(1) During the capture efficiency determination required by §§63.3160 and 63.3163 and described in §§63.3164 and 63.3165, you must monitor and record either the gas volumetric flow rate or the duct static pressure for each separate capture device in your emission capture system at least once every 15 minutes during each of the three test runs at a point in the duct between the capture device and the add-on control device inlet.

(2) Calculate and record the average gas volumetric flow rate or duct static pressure for the three test runs for each capture device, using all valid data. This average gas volumetric flow rate or duct static pressure is the minimum operating limit for that specific capture device.

[69 FR 22623, Apr. 26, 2004, as amended at 72 FR 20235, Apr. 24, 2007; 85 FR 41132, July 8, 2020]

sfrattini on LAPJZKW1R2 with $$_JOB
VerDate Sep<11>2014 09:16 Apr 04, 2023 Jkt 256165 PO 00000 Frm 00613 Fmt 8010 Sfmt 8010 Q:\40\256165.XXX PC31

§ 63.3168 What are the requirements for continuous parameter monitoring system installation, operation, and maintenance?

(a) *General*. You must install, operate, and maintain each CPMS specified in paragraphs (c), (e), (f), and (g) of this section according to paragraphs (a)(1) through (6) of this section. You must install, operate, and maintain each CPMS specified in paragraphs (b) and (d) of this section according to paragraphs (a)(3) through (5) of this section.

(1) The CPMS must complete a minimum of one cycle of operation for each successive 15-minute period. You must have a minimum of four equally-spaced successive cycles of CPMS operation in 1 hour.

(2) You must determine the average of all recorded readings for each successive 3-hour period of the emission capture system and add-on control device operation.

(3) You must record the results of each inspection, calibration, and validation check of the CPMS.

(4) You must maintain the CPMS at all times in accordance with § 63.3100(d) and have readily available necessary parts for routine repairs of the monitoring equipment.

(5) Before January 5, 2021, you must operate the CPMS and collect emission capture system and add-on control device parameter data at all times that a controlled coating operation is operating, except during monitoring malfunctions, associated repairs, and required quality assurance or control activities (including, if applicable, calibration checks and required zero and span adjustments). On and after January 5, 2021, you must operate the CPMS and collect emission capture system and add-on control device parameter data at all times that a controlled coating operation is operating in accordance with § 63.3100(d).

(6) Before January 5, 2021, you must not use emission capture system or add-on control device parameter data recorded during monitoring malfunctions, associated repairs, out-of-control periods, or required quality assurance or control activities when calculating data averages. You must use all the data collected during all other periods in calculating the data averages for determining compliance with the emission capture system and add-on control device operating limits. On and after January 5, 2021, startups and shutdowns are normal operation for this source category. Emissions from these activities are to be included when determining if the standards specified in §§ 63.3090, 63.3091, 63.3092, 63.4292, and 63.4293 are being attained. You must not use emission capture system or add-on control device parameter data recorded during monitoring malfunctions, associated repairs, out-of-control periods, or required quality assurance or control activities when calculating data averages. You must use all the data collected during all other periods in calculating the data averages for determining compliance with the emission capture system and add-on control device operating limits.

(7) A monitoring malfunction is any sudden, infrequent, not reasonably preventable failure of the CPMS to provide valid data. Monitoring failures that are caused in part by poor maintenance or careless operation are not malfunctions. Before January 5, 2021, any period for which the monitoring system is out of control and data are not available for required calculations is a deviation from the monitoring requirements. On and after January 5, 2021, except for periods of required quality assurance or control activities, any period during which the CPMS fails to operate and record data continuously as required by paragraph (a)(1) of this section, or generates data that cannot be included in calculating averages as specified in this paragraph (a)(7) constitutes a deviation from the monitoring requirements.

(b) *Capture system bypass line*. You must meet the requirements of paragraphs (b)(1) and (2) of this section for each emission capture system that contains bypass lines that could divert emissions away from the add-on control device to the atmosphere.

(1) You must monitor or secure the valve or closure mechanism controlling the bypass line in a nondiverting position in such a way that the valve or closure mechanism cannot be opened without creating a record that the valve was opened. The method used to monitor or secure the valve or closure

sfrattini on LAPJZKW1R2 with $$_JOB
VerDate Sep<11>2014 09:16 Apr 04, 2023 Jkt 256165 PO 00000 Frm 00614 Fmt 8010 Sfmt 8010 Q:\40\256165.XXX PC31

mechanism must meet one of the requirements specified in paragraphs (b)(1)(i) through (iv) of this section.

(i) *Flow control position indicator*. Install, calibrate, maintain, and operate according to the manufacturer's specifications a flow control position indicator that takes a reading at least once every 15 minutes and provides a record indicating whether the emissions are directed to the add-on control device or diverted from the add-on control device. The time of occurrence and flow control position must be recorded, as well as every time the flow direction is changed. The flow control position indicator must be installed at the entrance to any bypass line that could divert the emissions away from the add-on control device to the atmosphere.

(ii) *Car-seal or lock-and-key valve closures*. Secure any bypass line valve in the closed position with a car-seal or a lock-and-key type configuration. You must visually inspect the seal or closure mechanism at least once every month to ensure that the valve is maintained in the closed position, and the emissions are not diverted away from the add-on control device to the atmosphere.

(iii) *Valve closure monitoring*. Ensure that any bypass line valve is in the closed (nondiverting) position through monitoring of valve position at least once every 15 minutes. You must inspect the monitoring system at least once every month to verify that the monitor will indicate valve position.

(iv) *Automatic shutdown system*. Use an automatic shutdown system in which the coating operation is stopped when flow is diverted by the bypass line away from the add-on control device to the atmosphere when the coating operation is running. You must inspect the automatic shutdown system at least once every month to verify that it will detect diversions of flow and shut down the coating operation.

(2) If any bypass line is opened, you must include a description of why the bypass line was opened and the length of time it remained open in the semiannual compliance reports required in §63.3120.

(c) *Thermal oxidizers and catalytic oxidizers*. If you are using a thermal oxidizer or catalytic oxidizer as an add-on control device (including those used to treat desorbed concentrate streams from concentrators or carbon adsorbers), you must comply with the requirements in paragraphs (c)(1) through (3) of this section:

(1) For a thermal oxidizer, install a gas temperature monitor in the firebox of the thermal oxidizer or in the duct immediately downstream of the firebox before any substantial heat exchange occurs.

(2) For a catalytic oxidizer, install a gas temperature monitor upstream of the catalyst bed. If you establish the operating parameters for a catalytic oxidizer under §63.3167(b)(1) through (3), you must also install a gas temperature monitor downstream of the catalyst bed. The temperature monitors must be in the gas stream immediately before and after the catalyst bed to measure the temperature difference across the bed. If you establish the operating parameters for a catalytic oxidizer under §63.3167(b)(4) through (6), you need not install a gas temperature monitor downstream of the catalyst bed.

(3) For all thermal oxidizers and catalytic oxidizers, you must meet the requirements in paragraphs (a)(1) through (6) and (c)(3)(i) through (vii) of this section for each gas temperature monitoring device. For the purposes of this paragraph (c)(3), a thermocouple is part of the temperature sensor.

(i) Locate the temperature sensor in a position that provides a representative temperature.

(ii) Use a temperature sensor with a measurement sensitivity of 4 degrees Fahrenheit or 0.75 percent of the temperature value, whichever is larger.

(iii) Shield the temperature sensor system from electromagnetic interference and chemical contaminants.

(iv) If a gas temperature chart recorder is used, it must have a measurement sensitivity in the minor division of at least 20 degrees Fahrenheit.

(v) Perform an electronic calibration at least semiannually according to the procedures in the manufacturer's owners manual. Following the electronic calibration, you must conduct a temperature sensor validation check in which a second or redundant temperature sensor placed nearby the process

sfrattini on LAPJZKW1R2 with $$_JOB
VerDate Sep<11>2014 09:16 Apr 04, 2023 Jkt 256165 PO 00000 Frm 00615 Fmt 8010 Sfmt 8010 Q:\40\256165.XXX PC31

temperature sensor must yield a reading within 30 degrees Fahrenheit of the process temperature sensor reading.

(vi) Conduct calibration and validation checks any time the sensor exceeds the manufacturer's specified maximum operating temperature range or install a new temperature sensor.

(vii) At least monthly, inspect components for integrity and electrical connections for continuity, oxidation, and galvanic corrosion.

(d) *Regenerative carbon adsorbers.* If you are using a regenerative carbon adsorber as an add-on control device, you must monitor the total regeneration desorbing gas (*e.g.*, steam or nitrogen) mass flow for each regeneration cycle, the carbon bed temperature after each regeneration and cooling cycle, and comply with paragraphs (a)(3) through (5) and (d)(1) and (2) of this section.

(1) The regeneration desorbing gas mass flow monitor must be an integrating device having a measurement sensitivity of plus or minus 10 percent, capable of recording the total regeneration desorbing gas mass flow for each regeneration cycle.

(2) The carbon bed temperature monitor must have a measurement sensitivity of 1 percent of the temperature (as expressed in degrees Fahrenheit) recorded or 1 degree Fahrenheit, whichever is greater, and must be capable of recording the temperature within 15 minutes of completing any carbon bed cooling cycle.

(e) *Condensers.* If you are using a condenser, you must monitor the condenser outlet (product side) gas temperature and comply with paragraphs (a)(1) through (6) and (e)(1) and (2) of this section.

(1) The gas temperature monitor must have a measurement sensitivity of 1 percent of the temperature (expressed in degrees Fahrenheit) recorded or 1 degree Fahrenheit, whichever is greater.

(2) The temperature monitor must provide a gas temperature record at least once every 15 minutes.

(f) *Concentrators.* If you are using a concentrator, such as a zeolite wheel or rotary carbon bed concentrator, you must install a temperature monitor in the desorption gas stream. The temperature monitor must meet the requirements in paragraphs (a)(1) through (6) and (c)(3) of this section.

(g) *Emission capture systems.* The capture system monitoring system must comply with the applicable requirements in paragraphs (g)(1) and (2) of this section.

(1) For each flow measurement device, you must meet the requirements in paragraphs (a)(1) through (6) and (g)(1)(i) through (iv) of this section.

(i) Locate a flow sensor in a position that provides a representative flow measurement in the duct from each capture device in the emission capture system to the add-on control device.

(ii) Reduce swirling flow or abnormal velocity distributions due to upstream and downstream disturbances.

(iii) Conduct a flow sensor calibration check at least semiannually.

(iv) At least monthly, inspect components for integrity, electrical connections for continuity, and mechanical connections for leakage.

(2) For each pressure drop measurement device, you must comply with the requirements in paragraphs (a)(1) through (6) and (g)(2)(i) through (vi) of this section.

(i) Locate the pressure tap(s) in a position that provides a representative measurement of the pressure drop across each opening you are monitoring.

(ii) Minimize or eliminate pulsating pressure, vibration, and internal and external corrosion.

(iii) Check pressure tap pluggage daily.

(iv) Using an inclined manometer with a measurement sensitivity of 0.0002 inch water, check gauge calibration quarterly and transducer calibration monthly.

(v) Conduct calibration checks any time the sensor exceeds the manufacturer's specified maximum operating pressure range or install a new pressure sensor.

(vi) At least monthly, inspect components for integrity, electrical connections for continuity, and mechanical connections for leakage.

[69 FR 22623, Apr. 26, 2004, as amended at 85 FR 41132, July 8, 2020]

sfrattini on LAPJZKW1R2 with $$_JOB
VerDate Sep<11>2014 09:16 Apr 04, 2023 Jkt 256165 PO 00000 Frm 00616 Fmt 8010 Sfmt 8010 Q:\40\256165.XXX PC31

§ 63.3169 What are the requirements for a capture system or add-on control device which is not taken into account when demonstrating compliance with the applicable emission limitations?

You may have capture systems or add-on control devices which you choose not to take into account when demonstrating compliance with the applicable emission limitations. For any such capture system or add-on control device, you are not required to comply with the requirements of §§ 63.3093, 63.3100, 63.3110, 63.3120, 63.3130, 63.3131, and 63.3160 through 63.3168 with regard to notification, reporting, recordkeeping, performance tests, monitoring, operating parameters, capture efficiency, add-on control device efficiency, destruction efficiency, or removal efficiency. If, at a later date, you decide to take any such capture system or add-on control device into account when demonstrating compliance with the emission limitations, then at that time you must comply with the requirements of §§ 63.3093, 63.3100, 63.3110, 63.3120, 63.3130, 63.3131, and 63.3160 through 63.3168 with regard to notification, recordkeeping, performance tests, monitoring, operating parameters, capture efficiency, add-on control device efficiency, destruction efficiency, and removal efficiency, as applicable, for that capture system or add-on control device.

[72 FR 20235, Apr. 24, 2007]

COMPLIANCE REQUIREMENTS FOR THE COMBINED PRIMER-SURFACER, TOPCOAT, FINAL REPAIR, GLASS BONDING PRIMER, AND GLASS BONDING ADHESIVE EMISSION LIMITATIONS AND THE SEPARATE ELECTRODEPOSITION PRIMER EMISSION LIMITATIONS

§ 63.3170 By what date must I conduct performance tests and other initial compliance demonstrations?

(a) *New and reconstructed affected sources.* For a new or reconstructed affected source, you must meet the requirements of paragraphs (a)(1) through (4) of § 63.3160.

(b) *Existing affected sources.* For an existing affected source, you must meet the requirements of paragraphs (b)(1) through (3) of § 63.3160.

§ 63.3171 How do I demonstrate initial compliance?

(a) You must meet all of the requirements of this section to demonstrate initial compliance. To demonstrate initial compliance, the organic HAP emissions from the combined primer-surfacer, topcoat, final repair, glass bonding primer, and glass bonding adhesive operations plus all coatings and thinners, except for deadener materials and for adhesive and sealer materials that are not components of glass bonding systems, used in coating operations added to the affected source pursuant to § 63.3082(c) must meet the applicable emission limitation in § 63.3090(b) or § 63.3091(b); the organic HAP emissions from the electrodeposition primer operation must meet the applicable emissions limitations in § 63.3092(a) or (b); and you must meet the applicable operating limits and work practice standards in §§ 63.3093 and 63.3094.

(b) *Compliance with operating limits.* Except as provided in § 63.3160(a)(4), you must establish and demonstrate continuous compliance during the initial compliance period with the operating limits required by § 63.3093, using the procedures specified in §§ 63.3167 and 63.3168.

(c) *Compliance with work practice requirements.* You must develop, implement, and document your implementation of the work practice plans required by § 63.3094(b) and (c) during the initial compliance period, as specified in § 63.3130.

(d) *Compliance with emission limits.* You must follow the procedures in § 63.3161(e) through (n), excluding materials used in electrodeposition primer operations, to demonstrate compliance with the applicable emission limit in § 63.3090(b) or § 63.3091(b). You must follow the procedures in paragraph (e) of this section to demonstrate compliance with the emission limit in § 63.3092(a), or paragraphs (f) through (g) of this section to demonstrate compliance with the emission limitations in § 63.3092(b).

(e) *Determine the mass fraction of each organic HAP in each material used in the electrodeposition primer operation.* You must determine the mass fraction of each organic HAP for each material used in the electrodeposition primer

sfrattini on LAPJZKW1R2 with $$_JOB
VerDate Sep<11>2014 09:16 Apr 04, 2023 Jkt 256165 PO 00000 Frm 00617 Fmt 8010 Sfmt 8010 Q:\40\256165.XXX PC31

operation during the compliance period by using one of the options in paragraphs (e)(1) through (3) of this section.

(1) *Method 311 (appendix A to 40 CFR part 63).* You may use Method 311 for determining the mass fraction of each organic HAP.

(2) *Alternative method.* You may use an alternative test method for determining the mass fraction of organic HAP once the Administrator has approved it. You must follow the procedure in § 63.7(f) to submit an alternative test method for approval.

(3) *Information from the supplier or manufacturer of the material.* You may rely on information other than that generated by the test methods specified in paragraphs (e)(1) and (2) of this section, such as manufacturer's formulation data, if it represents each organic HAP in Table 5 to this subpart that is present at 0.1 percent by mass, and at 1.0 percent by mass or more for other compounds. If there is a disagreement between such information and results of a test conducted according to paragraph (e)(1) or (2) of this section, then the test method results will take precedence unless after consultation, the facility demonstrates to the satisfaction of the enforcement authority that the facility's data are correct.

(f) *Capture of electrodeposition bake oven emissions.* You must show that the electrodeposition bake oven meets the criteria in sections 5.3 through 5.5 of Method 204 of appendix M to 40 CFR part 51 and directs all of the exhaust gases from the bake oven to an add-on control device. For purposes of this showing, an electrodeposition bake oven air seal is not considered a natural draft opening provided you demonstrate that the direction of air movement across the interface between the bake oven air seal and the bake oven is into the bake oven. You may use lightweight strips of fabric or paper, or smoke tubes to make such demonstrations. You cannot count air flowing from an electrodeposition bake oven air seal into an electrodeposition bake oven as air flowing through a natural draft opening unless you elect to treat that electrodeposition bake oven air seal as a natural draft opening.

(g) *Control of electrodeposition bake oven emissions.* Determine the efficiency of each control device on each electrodeposition bake oven using the procedures in §§ 63.3164 and 63.3166.

(h) *Compliance demonstration.* To demonstrate initial compliance, the organic HAP emissions from the combined primer-surfacer, topcoat, final repair, glass bonding primer, and glass bonding adhesive operations plus all coatings and thinners, except for deadener materials and for adhesive and sealer materials that are not components of glass bonding systems, used in coating operations added to the affected source pursuant to § 63.3082(c) must meet the applicable emission limitation in § 63.3090(b) or § 63.3091(b); the organic HAP emissions from the electrodeposition primer operation must meet the applicable emissions limitations in § 63.3092(a) or (b). You must keep all records as required by §§ 63.3130 and 63.3131. As part of the Notification of Compliance Status required by § 63.3110, you must submit a statement that the coating operation(s) was (were) in compliance with the emission limitations during the initial compliance period because the organic HAP emission rate from the combined primer-surfacer, topcoat, final repair, glass bonding primer, and glass bonding adhesive operations plus all coatings and thinners, except for deadener materials and for adhesive and sealer materials that are not components of glass bonding systems, used in coating operations added to the affected source pursuant to § 63.3082(c) was less than or equal to the applicable emission limit in § 63.3090(b) or § 63.3091(b), and the organic HAP emissions from the electrodeposition primer operation met the applicable emissions limitations in § 63.3092(a) or (b), and you achieved the operating limits required by § 63.3093 and the work practice standards required by § 63.3094.

[69 FR 22623, Apr. 26, 2004, as amended at 72 FR 20235, Apr. 24, 2007; 85 FR 41132, July 8, 2020]

§ 63.3172 [Reserved]

§ 63.3173 How do I demonstrate continuous compliance with the emission limitations?

(a) To demonstrate continuous compliance with the applicable emission

sfrattini on LAPJZKW1R2 with $$_JOB
VerDate Sep<11>2014 09:16 Apr 04, 2023 Jkt 256165 PO 00000 Frm 00618 Fmt 8010 Sfmt 8010 Q:\40\256165.XXX PC31

limit in §63.3090(b) or §63.3091(b), the organic HAP emission rate for each compliance period determined according to the procedures in §63.3171 must be equal to or less than the applicable emission limit in §63.3090(b) or §63.3091(b). A compliance period consists of 1 month. Each month after the end of the initial compliance period described in §63.3170 is a compliance period consisting of that month. You must perform the calculations in §63.3171 on a monthly basis.

(b) If the organic HAP emission rate for any 1 month compliance period exceeded the applicable emission limit in §63.3090(b) or §63.3091(b), this is a deviation from the emission limitation for that compliance period and must be reported as specified in §§63.3110(c)(6) and 63.3120(a)(6).

(c) You must meet the requirements of §63.3163(c) through (j).

§63.3174 What are the requirements for a capture system or add-on control device which is not taken into account when demonstrating compliance with the applicable emission limitations?

You may have capture systems or add-on control devices which you choose not to take into account when demonstrating compliance with the applicable emission limitations. For any such capture system or add-on control device, you are not required to comply with the requirements of §§63.3093, 63.3100, 63.3110, 63.3120, 63.3130, 63.3131, and 63.3160 through 63.3168 with regard to notification, reporting, recordkeeping, performance tests, monitoring, operating parameters, capture efficiency, add-on control device efficiency, destruction efficiency, or removal efficiency. If, at a later date, you decide to take any such capture system or add-on control device into account when demonstrating compliance with the emission limitations, then at that time you must comply with the requirements of §§63.3093, 63.3100, 63.3110, 63.3120, 63.3130, 63.3131, and 63.3160 through 63.3168 with regard to notification, reporting, recordkeeping, performance tests, monitoring, operating parameters, capture efficiency, add-on control device efficiency, destruction efficiency, and removal efficiency, as applicable, for that capture system or add-on control device.

[72 FR 20236, Apr. 24, 2007]

OTHER REQUIREMENTS AND INFORMATION

§63.3175 Who implements and enforces this subpart?

(a) This subpart can be implemented and enforced by us, EPA, or a delegated authority such as your State, local, or tribal agency. If the Administrator has delegated authority to your State, local, or tribal agency, then that agency (as well as EPA) has the authority to implement and enforce this subpart. You should contact your EPA Regional Office to find out if implementation and enforcement of this subpart is delegated to your State, local, or tribal agency.

(b) In delegating implementation and enforcement authority of this subpart to a State, local, or tribal agency under subpart E of this part, the authorities contained in paragraph (c) of this section are retained by the EPA Administrator and are not transferred to the State, local, or tribal agency.

(c) The authorities that will not be delegated to State, local, or tribal agencies are listed in paragraphs (c)(1) through (4) of this section:

(1) Approval of alternatives to the work practice standards in §63.3094 under §63.6(g).

(2) Approval of major alternatives to test methods under §63.7(e)(2)(ii) and (f) and as defined in §63.90.

(3) Approval of major alternatives to monitoring under §63.8(f) and as defined in §63.90.

(4) Approval of major alternatives to recordkeeping and reporting under §63.10(f) and as defined in §63.90.

§63.3176 What definitions apply to this subpart?

Terms used in this subpart are defined in the CAA, in the General Provisions of this part, and in this section as follows:

Add-on control device means an air pollution control device, such as a thermal oxidizer or carbon adsorber, that reduces pollution in an air stream by destruction or removal before discharge to the atmosphere.

sfrattini on LAPJZKW1R2 with $$_JOB
VerDate Sep<11>2014 09:16 Apr 04, 2023 Jkt 256165 PO 00000 Frm 00619 Fmt 8010 Sfmt 8010 Q:\40\256165.XXX PC31

Add-on control device efficiency means the ratio of the emissions collected or destroyed by an add-on air pollution control device to the total emissions that are introduced into the control device, expressed as a percentage.

Adhesive means any chemical substance that is applied for the purpose of bonding two surfaces together.

Adhesive and sealer material means adhesives, sealers and thinners added to adhesives or sealers.

Anti-chip coating means a specialty type of coating designed to reduce stone chipping damage. Anti-chip coating may be applied to broad areas of the vehicle or to selected vehicle surfaces that are most vulnerable to impingement by stones and other road debris. Anti-chip coating is typically applied after the *electrodeposition primer* and before the *topcoat*. Anti-chip coating is a type of *primer-surfacer*.

Automobile means a motor vehicle designed to carry up to eight passengers, excluding vans, sport utility vehicles, and motor vehicles designed primarily to transport light loads of property. See also *Light-duty truck*.

Automobile and light-duty truck assembly plant means a facility which assembles automobiles or light-duty trucks, including coating facilities and processes.

Bake oven air seal means an entry or entry vestibule to or an exit or exit vestibule from a bake oven which isolates the bake oven from the area immediately preceding (for an entry or entry vestibule) or immediately following (for an exit or exit vestibule) the bake oven. No significant VOC generating activity takes place in a bake oven air seal. Fresh air is supplied into a bake oven air seal and is then directed in part into the bake oven and in part into the area immediately preceding or immediately following the bake oven. All types of bake ovens, including ovens associated with spray booths and electrodeposition primer bake ovens, may have bake oven air seals.

Basecoat/clearcoat means a topcoat system applied to exterior and selected interior vehicle surfaces primarily to provide an aesthetically pleasing appearance and acceptable durability performance. It consists of a layer of pigmented basecoat color coating, followed directly by a layer of a clear or semitransparent coating. It may include multiple layers of color coats or tinted clear materials.

Blackout coating means a type of specialty coating applied on selected vehicle surfaces (including areas of the engine compartment visible through the grill, and window and pillar trim) to provide a cosmetic appearance. Typically black or dark gray color. Blackout coating may be included in either the primer-surfacer or topcoat operations.

Body part means exterior parts such as hoods, fenders, doors, roof, quarter panels, decklids, tail gates, and cargo beds. Body parts were traditionally made of sheet metal, but now are also made of plastic. Bumpers, fascia, and cladding are not body parts.

Capture device means a hood, enclosure, room, floor sweep, or other means of containing or collecting emissions and directing those emissions into an add-on air pollution control device.

Capture efficiency or capture system efficiency means the portion (expressed as a percentage) of the pollutants from an emission source that is delivered to an add-on control device.

Capture system means one or more capture devices intended to collect emissions generated by a coating operation in the use of coatings, both at the point of application and at subsequent points where emissions from the coatings occur, such as flash-off, drying, or curing. As used in this subpart, multiple capture devices that collect emissions generated by a coating operation are considered a single capture system.

Catalytic oxidizer means a device for oxidizing pollutants or waste materials via flame and heat incorporating a catalyst to aid the combustion at lower operating temperature.

Chip resistant edge primer means an *anti-chip coating* applied to the leading edge of parts such as the hood or roof.

Cleaning material means a solvent used to remove contaminants and other materials such as dirt, grease, oil, and dried (*e.g.*, depainting) or wet coating from a substrate before or after coating application; or from equipment associated with a coating operation,

sfrattini on LAPJZKW1R2 with $$_JOB
VerDate Sep<11>2014 09:16 Apr 04, 2023 Jkt 256165 PO 00000 Frm 00620 Fmt 8010 Sfmt 8010 Q:\40\256165.XXX PC31

such as spray booths, spray guns, tanks, and hangers. Thus, it includes any cleaning material used on substrates or equipment or both.

Coating means a material applied to a substrate for decorative, protective, or functional purposes. Such materials include, but are not limited to, paints, sealants, caulks, inks, adhesives, primers, deadeners, and maskants. Decorative, protective, or functional materials that consist only of protective oils for metal, acids, bases, or any combination of these substances are not considered coatings for the purposes of this subpart.

Coating operation means equipment used to apply coating to a substrate (coating application) and to dry or cure the coating after application. A single coating operation always includes at least the point at which a coating is applied and all subsequent points in the affected source where organic HAP emissions from that coating occur. There may be multiple coating operations in an affected source. Coating application with hand-held nonrefillable aerosol containers, touchup bottles, touchup markers, marking pens, or pinstriping equipment is not a coating operation for the purposes of this subpart. The application of temporary materials such as protective oils and ''travel waxes'' that are designed to be removed from the vehicle before it is delivered to a retail purchaser is not a coating operation for the purposes of this subpart.

Coating solids means the nonvolatile portion of the coating.

Container means a receptacle, such as a can, vessel, tote, or tank, in which coatings, solvents or cleaning materials are held, stored, mixed, or carried.

Continuous parameter monitoring system (CPMS) means the total equipment that may be required to meet the data acquisition and availability requirements of this subpart; used to sample, condition (if applicable), analyze, and provide a record of coating operation, or capture system, or add-on control device parameters.

Controlled coating operation means a *coating operation* from which some or all of the organic HAP emissions are routed through a *capture system* and an *add-on control device* which are taken into account when demonstrating compliance with an emission limitation in this subpart.

Day tank means tank with agitation and pumping system used for mixing and continuous circulation of coatings from the paint storage area to the spray booth area of the paint shop.

Deadener means a specialty coating applied to selected vehicle surfaces primarily for the purpose of reducing the sound of road noise in the passenger compartment.

Deadener material means deadener and thinner added to deadener.

Deposited solids means the coating solids which remain on the substrate or object being painted.

Deviation means:

(1) Before January 5, 2021, any instance in which an affected source subject to this subpart or an owner or operator of such a source:

(i) Fails to meet any requirement or obligation established by this subpart including but not limited to any emission limit, operating limit, or work practice standard;

(ii) Fails to meet any term or condition that is adopted to implement an applicable requirement in this subpart and that is included in the operating permit for any affected source required to obtain such a permit; or

(iii) Fails to meet any emission limit or operating limit or work practice standard in this subpart during SSM, regardless of whether or not such failure is permitted by this subpart; and

(2) On and after January 5, 2021, any instance in which an affected source subject to this subpart or an owner or operator of such a source:

(i) Fails to meet any requirement or obligation established by this subpart including but not limited to any emission limit, operating limit, or work practice standard; or

(ii) Fails to meet any term or condition that is adopted to implement an applicable requirement in this subpart and that is included in the operating permit for any affected source required to obtain such a permit.

Electrodeposition primer or electrocoating primer means a process of applying a protective, corrosion-resistant waterborne primer on exterior and

sfrattini on LAPJZKW1R2 with $$_JOB
VerDate Sep<11>2014 09:16 Apr 04, 2023 Jkt 256165 PO 00000 Frm 00621 Fmt 8010 Sfmt 8010 Q:\40\256165.XXX PC31

interior surfaces that provides thorough coverage of recessed areas. It is a dip coating method that uses an electrical field to apply or deposit the conductive coating onto the part. The object being painted acts as an electrode that is oppositely charged from the particles of paint in the dip tank. Also referred to as E-Coat, Uni-Prime, and ELPO Primer.

Emission limitation means an emission limit, operating limit, or work practice standard.

Final repair means the operations performed and coating(s) applied to completely-assembled motor vehicles or to parts that are not yet on a completely assembled motor vehicle to correct damage or imperfections in the coating. The curing of the coatings applied in these operations is accomplished at a lower temperature than that used for curing primer-surfacer and topcoat. This lower temperature cure avoids the need to send parts that are not yet on a completely assembled vehicle through the same type of curing process used for primer-surfacer and topcoat and is necessary to protect heat sensitive components on completely assembled motor vehicles.

Flash-off area means the portion of a coating process between the coating application station and the next coating application station or drying oven where solvent begins to evaporate from the coated vehicle.

Glass bonding adhesive means an adhesive used to bond windshield or other glass to an automobile or light-duty truck body.

Glass bonding primer means a primer applied to windshield or other glass, or to body openings to prepare the glass or body openings for the application of glass bonding adhesive, or the installation of adhesive bonded glass.

Guide coat means *Primer-surfacer*.

In-line repair means the operation performed and coating(s) applied to correct damage or imperfections in the topcoat on parts that are not yet on a completely assembled motor vehicle. The curing of the coatingspplied in these operations is accomplished at essentially the same temperature as that used for curing the previously applied topcoat. Also referred to as high bake repair or high bake reprocess. In-line repair is considered part of the topcoat operation.

Light-duty truck means vans, sport utility vehicles, and motor vehicles designed primarily to transport light loads of property with gross vehicle weight rating of 8,500 lbs or less.

Lower body anti-chip coating means an *anti-chip coating* applied to lower body surfaces such as rocker panels, valence panels, lower portions of doors, or lower portions of fenders.

Manufacturer's formulation data means data on a material (such as a coating) that are supplied by the material manufacturer based on knowledge of the ingredients used to manufacture that material, rather than based on testing of the material with the test methods specified in §§ 63.3151 and 63.3161. Manufacturer's formulation data may include, but are not limited to, information on density, organic HAP content, volatile organic matter content, and coating solids content.

Mass fraction of organic HAP means the ratio of the mass of organic HAP to the mass of a material in which it is contained, expressed as kg of organic HAP per kg of material.

Month means a calendar month or a pre-specified period of 28 days to 35 days to allow for flexibility in recordkeeping when data are based on a business accounting period.

Organic HAP content means the mass of organic HAP per mass of coating material.

Other motor vehicle means a self-propelled vehicle designed for transporting persons or property on a street or highway that has a gross vehicle weight rating over 8,500 pounds. You may choose to make the coating of other motor vehicles subject to this subpart pursuant to § 63.3082(c).

Other motor vehicle assembly plant means a facility which assembles other motor vehicles, including coating facilities and processes.

Paint line means a set of coating operations which includes a topcoat operation and, if present, includes electrodeposition primer, primer-surfacer, final repair, glass bonding primer and glass bonding adhesive operations in which the same new automobile or new light-duty truck bodies, or body parts for new automobiles, or

sfrattini on LAPJZKW1R2 with $$_JOB
VerDate Sep<11>2014 09:16 Apr 04, 2023 Jkt 256165 PO 00000 Frm 00622 Fmt 8010 Sfmt 8010 Q:\40\256165.XXX PC31

new light-duty trucks are coated. The most typical paint line consists of a set of electrodeposition primer, primer-surfacer, topcoat, final repair, glass bonding primer, and glass bonding adhesive operations in which the same new automobile or new light-duty truck bodies are coated.

Paint shop means the collection of all areas at the facility in which new automobile or new light-duty truck bodies, or body parts for new automobiles or new light-duty trucks are phosphated and coated (including application, flash-off, drying and curing of electrodeposition primer, primer-surfacer, topcoat, final repair, glass bonding primer, glass bonding adhesive, deadener, adhesives and sealers); all coating operations added to the affected source pursuant to §63.3082(c); all areas at the facility in which substrates or equipment are cleaned relating to the coating of new automobile or new light-duty truck bodies, the coating of body parts for new automobiles or new light-duty trucks, or coating operations added to the affected source pursuant to §63.3082(c); and all areas at the facility used for storage, mixing, conveying and waste handling of coatings, thinners and cleaning materials related to the coating of new automobile or new light-duty truck bodies, the coating of body parts for new automobiles or new light-duty trucks, or coating operations added to the affected source pursuant to §63.3082(c). If there is no application of topcoat to new automobile or new light-duty truck bodies, or body parts for new automobiles or new light-duty trucks at the facility, then for purposes of this subpart the facility does not have a paint shop.

Permanent total enclosure (PTE) means a permanently installed enclosure that meets the criteria of Method 204 of appendix M, 40 CFR part 51, for a PTE and that directs all the exhaust gases from the enclosure to an add-on control device.

Plastic or composites molding facility means a facility where the purchase cost of capital equipment used for plastic or composites molding, including presses, tooling, and associated material processing and handling equipment, is greater than the purchase cost of capital equipment used for the surface coating of new automobile or new light-duty truck bodies or body parts for new automobiles or new light-duty trucks.

Primer-surfacer means an intermediate protective coating applied on the *electrodeposition primer* and under the *topcoat*. Primer-surfacer provides adhesion, protection, and appearance properties to the total finish. Primer-surfacer may also be called *guide coat* or *surfacer*. *Anti-chip coating* is a type of primer-surfacer.

Purge/clean operation means the process of flushing paint out and cleaning the spray lines when changing colors or to remove undesired material. It includes use of air and solvents to clean the lines.

Purge capture means the capture of purge solvent and materials into a closed collection system immediately after purging the system. It is used to prevent the release of organic HAP emissions and includes the disposal of the captured purge material.

Purge material means the coating and associated cleaning solvent materials expelled from the spray system during the process of cleaning the spray lines and applicators when color-changing or to maintain the cleanliness of the spray system.

Protective oil means an organic material that is applied to metal for the purpose of providing lubrication or protection from corrosion without forming a solid film. This definition of protective oil includes, but is not limited to, lubricating oils, evaporative oils (including those that evaporate completely), and extrusion oils.

Research or laboratory operations means surface coating for which the primary purpose is research and development of new processes and products, that is conducted under the close supervision of technically trained personnel, and that is not part of the manufacture of final or intermediate products for commercial purposes, except in a *de minimis* manner.

Responsible official means responsible official as defined in 40 CFR 70.2.

Sealer means a high solids, high viscosity material, generally, but not always, applied in the paint shop after the body has received an

sfrattini on LAPJZKW1R2 with $$_JOB
VerDate Sep<11>2014 09:16 Apr 04, 2023 Jkt 256165 PO 00000 Frm 00623 Fmt 8010 Sfmt 8010 Q:\40\256165.XXX PC31

electrodeposition primer coating. The primary purpose of sealers is to fill body joints completely so that there is no intrusion of water, gases or corrosive materials into the passenger area of the body compartment. Also referred to as sealants.

Spray booth means a ventilated structure housing automatic and/or manual spray application equipment for coating operations. Includes facilities for the capture and entrapment of particulate overspray.

Spray booth air seal means an entry or entry vestibule to or exit or exit vestibule from a spray booth which isolates the spray booth from the area immediately preceding (for an entry or entry vestibule) or immediately following (for an exit or exit vestibule) the spray booth. No coating application or other VOC generating activity takes place in a spray booth air seal. Fresh air is supplied into a spray booth air seal and is then directed in part into the spray booth and in part into the area immediately preceding or immediately following the spray booth.

Startup, initial means the first time equipment is used in a facility to produce a salable product.

Surface preparation means use of a cleaning material on a portion of or all of a substrate. This includes use of a cleaning material to remove dried coating, which is sometimes called ''depainting.''

Surfacer means *Primer-surfacer*.

Tack-wipe means solvent impregnated cloth used to remove dust from surfaces prior to application of coatings.

Temporary total enclosure means an enclosure constructed for the purpose of measuring the capture efficiency of pollutants emitted from a given source as defined in Method 204 of appendix M, 40 CFR part 51.

Thermal oxidizer means a device for oxidizing air pollutants or waste materials via flame and heat.

Thinner means an organic solvent that is added to a coating after the coating is received from the supplier.

Topcoat means the final coating system applied to provide the final color and/or a protective finish. The topcoat may be a monocoat color or basecoat/clearcoat system. In-line repair and two-tone are part of topcoat.

Total volatile hydrocarbon (TVH) means the total amount of nonaqueous volatile organic matter determined according to Methods 204 and 204A through F of appendix M to 40 CFR part 51 and substituting the term TVH each place in the methods where the term VOC is used. The TVH includes both VOC and non-VOC.

Touchup bottle means a coating container with a volume of 0.25 liter or less used with a brush or other non-atomizing applicator.

Transfer efficiency means the ratio of the amount of coating solids deposited onto the surface of the object to the total amount of coating solids sprayed while applying the coating to the object.

Uncontrolled coating operation means a coating operation from which none of the organic HAP emissions are routed through an emission capture system and add-on control device.

Underbody anti-chip coating means an *anti-chip coating* applied to the underbody or wheel wells primarily for the purpose of protecting these areas of the vehicle from stone chipping.

Volatile organic compound (VOC) means any compound defined as VOC in 40 CFR 51.100(s).

Volume fraction of coating solids means the ratio of the volume of coating solids (also known as volume of nonvolatiles) to the volume of coating; liters of coating solids per liter of coating.

[69 FR 22623, Apr. 26, 2004, as amended at 71 FR 76927, Dec. 22, 2006; 72 FR 20236, Apr. 24, 2007; 85 FR 41132, July 8, 2020]

TABLE 1 TO SUBPART IIII OF PART 63—OPERATING LIMITS FOR CAPTURE SYSTEMS AND ADD-ON CONTROL DEVICES

If you are required to comply with operating limits by §63.3093, you must comply with the applicable operating limits in the following table

sfrattini on LAPJZKW1R2 with $$_JOB
VerDate Sep<11>2014 09:16 Apr 04, 2023 Jkt 256165 PO 00000 Frm 00624 Fmt 8010 Sfmt 8026 Q:\40\256165.XXX PC31

For the following device ...	You must meet the following operating limit ...	And you must demonstrate continuous compliance with the operating limit by
1. Thermal oxidizer	a. The average combustion temperature in any 3-hour period must not fall below the combustion temperature limit established according to § 63.3167(a).	i. Collecting the combustion temperature data according to § 63.3168(c); ii. Reducing the data to 3-hour block averages; and iii. Maintaining the 3-hour average combustion temperature at or above temperature limit.
2. Catalytic oxidizer	a. The average temperature measured just before the catalyst bed in any 3-hour period must not fall below the limit established according to § 63.3167(b); and either.	i. Collecting the temperature data temperature according to § 63.3168(c); ii. Reducing the data to 3-hour block averages; and iii. Maintaining the 3-hour average temperature before the catalyst bed at or above the temperature limit.
	b. Ensure that the average temperature difference across the catalyst bed in any 3-hour period does not fall below the temperature difference limit established according to § 63.3167(b)(2); or.	i. Collecting the temperature data according to § 63.3168(c); ii. Reducing the data to 3-hour block averages; and iii. Maintaining the 3-hour average temperature difference at or above the temperature difference limit; or
	c. Develop and implement an inspection and maintenance plan according to § 63.3167(b)(4).	i. Maintaining an up-to-date inspection maintenance plan, records of annual catalyst activity checks, records of monthly inspections of the oxidizer system, and records of the annual internal inspections of the catalyst bed. If a problem is discovered during a monthly or annual inspection required by § 63.3167(b)(4), you must take corrective action as soon as practicable consistent with the manufacturer's recommendations.
3. Regenerative carbon adsorber.	a. The total regeneration desorbing gas (*e.g.,* steam or nitrogen) mass flow for each carbon bed regeneration cycle must not fall below the total regeneration desorbing gas mass flow limit established according to § 63.3167(c).	i. Measuring the total regeneration desorbing gas (*e.g.,* steam or nitrogen) mass flow for each regeneration cycle according to § 63.3168(d); and ii. Maintaining the total regeneration desorbing gas mass flow at or above the mass flow limit.
	b. The temperature of the carbon bed after completing each regeneration and any cooling cycle must not exceed the carbon bed temperature limit established according to § 63.3167(c).	i. Measuring the temperature of the carbon bed after completing each regeneration and any cooling cycle according to § 63.3168(d); and ii. Operating the carbon beds such that each carbon bed is not returned to service until completing each regeneration and any cooling cycle until the recorded temperature of the carbon bed is at or below the temperature limit.
4. Condenser	a. The average condenser outlet (product side) gas temperature in any 3-hour period must not exceed the temperature limit established according to § 63.3167(d).	i. Collecting the condenser outlet (product side) gas temperature according to § 63.3168(e); ii. Reducing the data to 3-hour block averages; and iii. Maintaining the 3-hour average gas temperature at the outlet at or below the temperature limit.
5. Concentrators, including zeolite wheels and rotary carbon adsorbers.	a. The average desorption gas inlet temperature in any 3-hour period must not fall below the limit established according to § 63.3167(e).	i. Collecting the temperature data according to § 63.3168(f); ii. Reducing the data to 3-hour block averages; and iii. maintaining the 3-hour average temperature at or above the temperature limit.

sfrattini on LAPJZKW1R2 with $$_JOB
VerDate Sep<11>2014 09:16 Apr 04, 2023 Jkt 256165 PO 00000 Frm 00625 Fmt 8010 Sfmt 8002 Q:\40\256165.XXX PC31

For the following device ...	You must meet the following operating limit ...	And you must demonstrate continuous compliance with the operating limit by
6. Emission capture system that is a PTE.	a. The direction of the air flow at all times must be into the enclosure; and either. b. The average facial velocity of air through all natural draft openings in the enclosure must be at least 200 feet per minute; or. c. The pressure drop across the enclosure must be at least 0.007 inch water, as established in Method 204 of appendix M to 40 CFR part 51.	i. Collecting the direction of air flow, and either the facial velocity of air through all natural draft openings according to § 63.3168(g)(1) or the pressure drop across the enclosure according to § 63.3168(g)(2); and ii. Maintaining the facial velocity of air flow through all natural draft openings or the pressure drop at or above the facial velocity limit or pressure drop limit, and maintaining the direction of air flow into the enclosure at all times.
7. Emission capture system that is not a PTE.	a. The average gas volumetric flow rate or duct static pressure in each duct between a capture device and add-on control device inlet in any 3-hour period must not fall below the average volumetric flow rate or duct static pressure limit established for that capture device according to § 63.3167(f). This applies only to capture devices that are not part of a PTE that meets the criteria of § 63.3165(a) and that are not capturing emissions from a downdraft spray booth or from a flashoff area or bake oven associated with a downdraft spray booth.	i. Collecting the gas volumetric flow rate or duct static pressure for each capture device according to § 63.3168(g); ii. Reducing the data to 3-hour block averages; and iii. Maintaining the 3-hour average gas volumetric flow rate or duct static pressure for each capture device at or above the gas volumetric flow rate or duct static pressure limit.

[69 FR 22623, Apr. 26, 2004, as amended at 72 FR 20236, Apr. 24, 2007]

Table 2 to Subpart IIII of Part 63—Applicability of General Provisions to Subpart IIII of Part 63

You must comply with the applicable General Provisions requirements according to the following table:

Citation	Subject	Applicable to subpart IIII	Explanation
§ 63.1(a)(1)–(12)	General Applicability	Yes.	
§ 63.1(b)(1)–(3)	Initial Applicability Determination	Yes	Applicability to subpart IIII is also specified in § 63.3081.
§ 63.1(c)(1)	Applicability After Standard Established.	Yes.	
§ 63.1(c)(2)	Applicability of Permit Program for Area Sources.	No	Area sources are not subject to subpart IIII.
§ 63.1(c)(5)	Extensions and Notifications	Yes.	
§ 63.1(c)(6)	Reclassification	Yes.	
§ 63.1(e)	Applicability of Permit Program Before Relevant Standard is Set.	Yes.	
§ 63.2	Definitions	Yes	Additional definitions are specified in § 63.3176.
§ 63.3	Units and Abbreviations	Yes.	
§ 63.4(a)(1)–(2)	Prohibited Activities	Yes.	
§ 63.4(b)–(c)	Circumvention/Fragmentation	Yes.	
§ 63.5(a)	Preconstruction Review Applicability.	Yes.	
§ 63.5(b)(1), (3), (4), (6)	Requirements for Existing, Newly Constructed, and Reconstructed Sources.	Yes.	
§ 63.5(d)(1)(i)–(ii)(F), (d)(1)(ii)(H), (d)(1)(ii)(J), (d)(1)(iii), (d)(2)–(4).	Application for Approval of Construction/Reconstruction.	Yes.	
§ 63.5(e)	Approval of Construction/Reconstruction.	Yes.	
§ 63.5(f)	Approval of Construction/Reconstruction Based on Prior State Review.	Yes.	
§ 63.6(a)	Compliance With Standards and Maintenance Requirements—Applicability.	Yes.	
§ 63.6(b)(1)–(5), (b)(7)	Compliance Dates for New and Reconstructed Sources.	Yes	Section 63.3083 specifies the compliance dates.
§ 63.6(c)(1), (2), (5)	Compliance Dates for Existing Sources.	Yes	Section 63.3083 specifies the compliance dates.

sfrattini on LAPJZKW1R2 with $$_JOB
VerDate Sep<11>2014 09:16 Apr 04, 2023 Jkt 256165 PO 00000 Frm 00626 Fmt 8010 Sfmt 8002 Q:\40\256165.XXX PC31

You must comply with the applicable General Provisions requirements according to the following table:

Citation	Subject	Applicable to subpart IIII	Explanation
§ 63.6(e)(1)(i)–(ii)	Operation and Maintenance	Yes before January 5, 2021. No on and after January 5, 2021.	*See* § 63.3100(d) for general duty requirement.
§ 63.6(e)(1)(iii)	Operation and Maintenance	Yes.	
§ 63.6(e)(3)(i), (e)(3)(iii)–(ix)	SSMP	Yes before January 5, 2021. No on and after January 5, 2021.	
§ 63.6(f)(1)	Compliance Except During SSM	Yes before January 5, 2021. No on and after January 5, 2021.	
§ 63.6(f)(2)–(3)	Methods for Determining Compliance.	Yes.	
§ 63.6(g)	Use of an Alternative Standard	Yes.	
§ 63.6(h)	Compliance With Opacity/Visible Emission Standards.	No	Subpart IIII does not establish opacity standards and does not require continuous opacity monitoring systems (COMS).
§ 63.6(i)(1)–(14), (16)	Extension of Compliance	Yes.	
63.6(j)	Presidential Compliance Exemption.	Yes.	
§ 63.7(a)(1)	Performance Test Requirements—Applicability.	Yes	Applies to all affected sources. Additional requirements for performance testing are specified in §§ 63.3164 and 63.3166.
§ 63.7(a)(2) except (a)(2)(i)–(viii)	Performance Test Requirements—Dates.	Yes	Applies only to performance tests for capture system and control device efficiency at sources using these to comply with the standards. Section 63.3160 specifies the schedule for performance test requirements that are earlier than those specified in § 63.7(a)(2).
§ 63.7(a)(3)–(4)	Performance Tests Required By the Administrator, Force Majeure.	Yes.	
§ 63.7(b)–(d)	Performance Test Requirements—Notification, Quality Assurance, Facilities Necessary for Safe Testing Conditions During Test.	Yes	Applies only to performance tests for capture system and add-on control device efficiency at sources using these to comply with the standards.
§ 63.7(e)(1)	Conduct of performance tests	Yes before January 5, 2021. No on and after January 5, 2021.	*See* § 63.3164.
§ 63.7(e)(2)–(4)	Conduct of performance tests	Yes.	
§ 63.7(f)	Performance Test Requirements—Use of Alternative Test Method.	Yes	Applies to all test methods except those used to determine capture system efficiency.
§ 63.7(g)–(h)	Performance Test Requirements—Data Analysis, Recordkeeping, Reporting, Waiver of Test.	Yes	Applies only to performance tests for capture system and add-on control device efficiency at sources using these to comply with the standards.
§ 63.8(a)(1)–(2)	Monitoring Requirements—Applicability.	Yes	Applies only to monitoring of capture system and add-on control device efficiency at sources using these to comply with the standards. Additional requirements for monitoring are specified in § 63.3168.
§ 63.8(a)(4)	Additional Monitoring Requirements.	No	Subpart IIII does not have monitoring requirements for flares.
§ 63.8(b)	Conduct of Monitoring	Yes.	

sfrattini on LAPJZKW1R2 with $$_JOB
VerDate Sep<11>2014 09:16 Apr 04, 2023 Jkt 256165 PO 00000 Frm 00627 Fmt 8010 Sfmt 8002 Q:\40\256165.XXX PC31

You must comply with the applicable General Provisions requirements according to the following table:

Citation	Subject	Applicable to subpart IIII	Explanation
§ 63.8(c)(1)	Continuous Monitoring Systems (CMS) Operation and Maintenance.	Yes before January 5, 2021. No on and after January 5, 2021.	Section 63.3168 specifies the requirements for the operation of CMS for capture systems and add-on control devices at sources using these to comply.
63.8(c)(2)–(3)	CMS Operation and Maintenance.	Yes	Applies only to monitoring of capture system and add-on control device efficiency at sources using these to comply with the standards. Additional requirements for CMS operations and maintenance are specified in § 63.3168.
§ 63.8(c)(4)	CMS	No	Section 63.3168 specifies the requirements for the operation of CMS for capture systems and add-on control devices at sources using these to comply with the standards.
§ 63.8(c)(5)	COMS	No	Subpart IIII does not have opacity or visible emission standards.
§ 63.8(c)(6)	CMS Requirements	No	Section 63.3168 specifies the requirements for monitoring systems for capture systems and add-on control devices at sources using these to comply with the standards.
§ 63.8(c)(7)	CMS Out-of-Control Periods	Yes.	
§ 63.8(c)(8)	CMS Out-of-Control Periods Reporting.	No	Section 63.3120 requires reporting of CMS out-of-control periods.
§ 63.8(d)–(e)	Quality Control Program and CMS Performance Evaluation.	No	Subpart IIII does not require the use of continuous emissions monitoring systems.
§ 63.8(f)(1)–(5)	Use of an Alternative Monitoring Method.	Yes.	
§ 63.8(f)(6)	Alternative to Relative Accuracy Test.	No	Subpart IIII does not require the use of CEMS.
§ 63.8(g)	Data Reduction	No	Sections 63.3167 and 63.3168 specify monitoring data reduction.
§ 63.9(a)	Notification Requirements	Yes.	
§ 63.9(b)(1)–(2)	Initial Notifications	Yes.	
§ 63.9(b)(4)(i), (b)(4)(v), (b)(5)	Application for Approval of Construction or Reconstruction.	Yes.	
§ 63.9(c)	Request for Extension of Compliance.	Yes.	
§ 63.9(d)	Special Compliance Requirement Notification.	Yes.	
§ 63.9(e)	Notification of Performance Test	Yes	Applies only to capture system and add-on control device performance tests at sources using these to comply with the standards.
§ 63.9(f)	Notification of Visible Emissions/Opacity Test.	No	Subpart IIII does not have opacity or visible emission standards.
§ 63.9(g)	Additional Notifications When Using CMS.	No	Subpart IIII does not require the use of CEMS.
§ 63.9(h)(1)–(3), (5)–(6)	Notification of Compliance Status.	Yes	Section 63.3110 specifies the dates for submitting the notification of compliance status.
§ 63.9(i)	Adjustment of Submittal Deadlines.	Yes.	
§ 63.9(j)	Change in Previous Information	Yes.	
§ 63.9(k)	Electronic reporting procedures	Yes	Only as specified in § 63.9(j).
§ 63.10(a)	Recordkeeping/Reporting—Applicability and General Information.	Yes.	

sfrattini on LAPJZKW1R2 with $$_JOB
VerDate Sep<11>2014 09:16 Apr 04, 2023 Jkt 256165 PO 00000 Frm 00628 Fmt 8010 Sfmt 8002 Q:\40\256165.XXX PC31

You must comply with the applicable General Provisions requirements according to the following table:

Citation	Subject	Applicable to subpart IIII	Explanation
§ 63.10(b)(1)	General Recordkeeping Requirements.	Yes	Additional requirements are specified in §§ 63.3130 and 63.3131.
§ 63.10(b)(2)(i)–(ii)	Recordkeeping of Occurrence and Duration of Startups and Shutdowns and of Failures to Meet Standards.	Yes before January 5, 2021. No on and after January 5, 2021.	*See* 63.3130(g).
§ 63.10(b)(2)(iii)	Recordkeeping Relevant to Maintenance of Air Pollution Control and Monitoring Equipment.	Yes.	
§ 63.10(b)(2)(iv)–(v)	Actions Taken to Minimize Emissions During SSM.	Yes before January 5, 2021. No on and after January 5, 2021.	*See* § 63.3130(g)(4) for a record of actions taken to minimize emissions during a deviation from the standard.
§ 63.10(b)(2)(vi)	Recordkeeping for CMS Malfunctions.	Yes before January 5, 2021. No on and after January 5, 2021.	*See* § 63.3130(g) for records of periods of deviation from the standard, including instances where a CMS is inoperative or out-of-control.
§ 63.10(b)(2)(vii)–(xi)	Records	Yes.	
§ 63.10(b)(2)(xii)	Records	Yes.	
§ 63.10(b)(2)(xiii)		No	Subpart IIII does not require the use of CEMS.
§ 63.10(b)(2)(xiv)		Yes.	
§ 63.10(b)(3)	Recordkeeping Requirements for Applicability Determinations.	Yes.	
§ 63.10(c)(1)–(6)	Additional Recordkeeping Requirements for Sources with CMS.	Yes.	
§ 63.10(c)(7)–(8)	Additional Recordkeeping Requirements for Sources with CMS.	No	*See* § 63.3130(g) for records of periods of deviation from the standard, including instances where a CMS is inoperative or out-of-control.
§ 63.10(c)(10)–(14)		Yes.	
§ 63.10(c)(15)	Records Regarding the SSM Plan.	Yes before January 5, 2021. No on and after January 5, 2021.	
§ 63.10(d)(1)	General Reporting Requirements.	Yes	Additional requirements are specified in § 63.3120.
§ 63.10(d)(2)	Report of Performance Test Results.	Yes	Additional requirements are specified in § 63.3120(b).
§ 63.10(d)(3)	Reporting Opacity or Visible Emissions Observations.	No	Subpart IIII does not require opacity or visible emissions observations.
§ 63.10(d)(4)	Progress Reports for Sources With Compliance Extensions.	Yes.	
§ 63.10(d)(5)	SSM Reports	Yes before January 5, 2021. No on and after January 5, 2021.	*See* 63.3120(a)(6).
§ 63.10(e)(1)–(2)	Additional CMS Reports	No	Subpart IIII does not require the use of CEMS.
§ 63.10(e)(3)	Excess Emissions/CMS Performance Reports.	No	Section 63.3120(b) specifies the contents of periodic compliance reports.
§ 63.10(e)(4)	COMS Data Reports	No	Subpart IIII does not specify requirements for opacity or COMS.
§ 63.10(f)	Recordkeeping/Reporting Waiver.	Yes.	
§ 63.11	Control Device Requirements/Flares.	No	Subpart IIII does not specify use of flares for compliance.
§ 63.12	State Authority and Delegations	Yes.	
§ 63.13	Addresses	Yes.	
§ 63.14	IBR	Yes.	
§ 63.15	Availability of Information/Confidentiality.	Yes.	

sfrattini on LAPJZKW1R2 with $$_JOB
VerDate Sep<11>2014 09:16 Apr 04, 2023 Jkt 256165 PO 00000 Frm 00629 Fmt 8010 Sfmt 8026 Q:\40\256165.XXX PC31

[85 FR 41133, July 8, 2020, as amended at 85 FR 73904, Nov. 19, 2020]

TABLE 3 TO SUBPART IIII OF PART 63—DEFAULT ORGANIC HAP MASS FRACTION FOR SOLVENTS AND SOLVENT BLENDS

You may use the mass fraction values in the following table for solvent blends for which you do not have test data or manufacturer's formulation data

Solvent/solvent blend	CAS. No.	Average organic HAP mass fraction	Typical organic HAP, percent by mass
1. Toluene	108–88–3	1.0	Toluene.
2. Xylene(s)	1330–20–7	1.0	Xylenes, ethylbenzene.
3. Hexane	110–54–3	0.5	n-hexane.
4. n-Hexane	110–54–3	1.0	n-hexane.
5. Ethylbenzene	100–41–4	1.0	Ethylbenzene.
6. Aliphatic 140		0	None.
7. Aromatic 100		0.02	1% xylene, 1% cumene.
8. Aromatic 150		0.09	Naphthalene.
9. Aromatic naphtha	64742–95–6	0.02	1% xylene, 1% cumene.
10. Aromatic solvent	64742–94–5	0.1	Naphthalene.
11. Exempt mineral spirits	8032–32–4	0	None.
12. Ligroines (VM & P)	8032–32–4	0	None.
13. Lactol spirits	64742–89–6	0.15	Toluene.
14. Low aromatic white spirit	64742–82–1	0	None.
15. Mineral spirits	64742–88–7	0.01	Xylenes.
16. Hydrotreated naphtha	64742–48–9	0	None.
17. Hydrotreated light distillate	64742–47–8	0.001	Toluene.
18. Stoddard solvent	8052–41–3	0.01	Xylenes.
19. Super high-flash naphtha	64742–95–6	0.05	Xylenes.
20. Varsol® solvent	8052–49–3	0.01	0.5% xylenes, 0.5% ethylbenzene.
21. VM & P naphtha	64742–89–8	0.06	3% toluene, 3% xylene.
22. Petroleum distillate mixture	68477–31–6	0.08	4% naphthalene, 4% biphenyl.

TABLE 4 TO SUBPART IIII OF PART 63—DEFAULT ORGANIC HAP MASS FRACTION FOR PETROLEUM SOLVENT GROUPS [A]

You may use the mass fraction values in the following table for solvent blends for which you do not have test data or manufacturer's formulation data

Solvent type	Average organic HAP mass fraction	Typical organic HAP, percent by mass
Aliphatic [b]	0.03	1% Xylene, 1% Toluene, and 1% Ethylbenzene.
Aromatic [c]	0.06	4% Xylene, 1% Toluene, and 1% Ethylbenzene.

[a] Use this table only if the solvent blend does not match any of the solvent blends in Table 3 to this subpart, and you only know whether the blend is aliphatic or aromatic.
[b] *E.g.*, Mineral Spirits 135, Mineral Spirits 150 EC, Naphtha, Mixed Hydrocarbon, Aliphatic Hydrocarbon, Aliphatic Naphtha, Naphthol Spirits, Petroleum Spirits, Petroleum Oil, Petroleum Naphtha, Solvent Naphtha, Solvent Blend.
[c] *E.g.*, Medium-flash Naphtha, High-flash Naphtha, Aromatic Naphtha, Light Aromatic Naphtha, Light Aromatic Hydrocarbons, Aromatic Hydrocarbons, Light Aromatic Solvent.

TABLE 5 TO SUBPART IIII OF PART 63—LIST OF HAP THAT MUST BE COUNTED TOWARD TOTAL ORGANIC HAP CONTENT IF PRESENT AT 0.1 PERCENT OR MORE BY MASS

Chemical name	CAS No.
1,1,2,2-Tetrachloroethane	79–34–5
1,1,2-Trichloroethane	79–00–5
1,1-Dimethylhydrazine	57–14–7
1,2-Dibromo-3-chloropropane	96–12–8
1,2-Diphenylhydrazine	122–66–7
1,3-Butadiene	106–99–0
1,3-Dichloropropene	542–75–6
1,4-Dioxane	123–91–1
2,4,6-Trichlorophenol	88–06–2
2,4/2,6-Dinitrotoluene (mixture)	25321–14–6
2,4-Dinitrotoluene	121–14–2
2,4-Toluene diamine	95–80–7
2-Nitropropane	79–46–9
3,3′-Dichlorobenzidine	91–94–1

sfrattini on LAPJZKW1R2 with $$_JOB
VerDate Sep<11>2014 09:16 Apr 04, 2023 Jkt 256165 PO 00000 Frm 00630 Fmt 8010 Sfmt 8002 Q:\40\256165.XXX PC31

Chemical name	CAS No.
3,3′-Dimethoxybenzidine	119–90–4
3,3′-Dimethylbenzidine	119–93–7
4,4′-Methylene bis(2-chloroaniline)	101–14–4
Acetaldehyde	75–07–0
Acrylamide	79–06–1
Acrylonitrile	107–13–1
Allyl chloride	107–05–1
alpha-Hexachlorocyclohexane (a-HCH)	319–84–6
Aniline	62–53–3
Benzene	71–43–2
Benzidine	92–87–5
Benzotrichloride	98–07–7
Benzyl chloride	100–44–7
beta-Hexachlorocyclohexane (b-HCH)	319–85–7
Bis(2-ethylhexyl)phthalate	117–81–7
Bis(chloromethyl)ether	542–88–1
Bromoform	75–25–2
Captan	133–06–2
Carbon tetrachloride	56–23–5
Chlordane	57–74–9
Chlorobenzilate	510–15–6
Chloroform	67–66–3
Chloroprene	126–99–8
Cresols (mixed)	1319–77–3
DDE	3547–04–4
Dichloroethyl ether	111–44–4
Dichlorvos	62–73–7
Epichlorohydrin	106–89–8
Ethyl acrylate	140–88–5
Ethylene dibromide	106–93–4
Ethylene dichloride	107–06–2
Ethylene oxide	75–21–8
Ethylene thiourea	96–45–7
Ethylidene dichloride (1,1-Dichloroethane)	75–34–3
Formaldehyde	50–00–0
Heptachlor	76–44–8
Hexachlorobenzene	118–74–1
Hexachlorobutadiene	87–68–3
Hexachloroethane	67–72–1
Hydrazine	302–01–2
Isophorone	78–59–1
Lindane (hexachlorocyclohexane, all isomers)	58–89–9
m-Cresol	108–39–4
Methylene chloride	75–09–2
Naphthalene	91–20–3
Nitrobenzene	98–95–3
Nitrosodimethylamine	62–75–9
o-Cresol	95–48–7
o-Toluidine	95–53–4
Parathion	56–38–2
p-Cresol	106–44–5
p-Dichlorobenzene	106–46–7
Pentachloronitrobenzene	82–68–8
Pentachlorophenol	87–86–5
Propoxur	114–26–1
Propylene dichloride	78–87–5
Propylene oxide	75–56–9
Quinoline	91–22–5
Tetrachloroethene	127–18–4
Toxaphene	8001–35–2
Trichloroethylene	79–01–6
Trifluralin	1582–09–8
Vinyl bromide	593–60–2
Vinyl chloride	75–01–4
Vinylidene chloride	75–35–4

[85 FR 41136, July 8, 2020]

sfrattini on LAPJZKW1R2 with $$_JOB
VerDate Sep<11>2014 09:16 Apr 04, 2023 Jkt 256165 PO 00000 Frm 00631 Fmt 8010 Sfmt 8026 Q:\40\256165.XXX PC31

APPENDIX A TO SUBPART IIII OF PART 63—DETERMINATION OF CAPTURE EFFICIENCY OF AUTOMOBILE AND LIGHT-DUTY TRUCK SPRAY BOOTH EMISSIONS FROM SOLVENT-BORNE COATINGS USING PANEL TESTING

1.0 Applicability, Principle, and Summary of Procedure.

1.1 Applicability.

This procedure applies to the determination of capture efficiency of automobile and light-duty truck spray booth emissions from solvent-borne coatings using panel testing. This procedure can be used to determine capture efficiency for partially controlled spray booths (*e.g.*, automated spray zones controlled and manual spray zones not controlled) and for fully controlled spray booths.

1.2 Principle.

1.2.1 The volatile organic compounds (VOC) associated with the coating solids deposited on a part (or panel) in a controlled spray booth zone (or group of contiguous controlled spray booth zones) partition themselves between the VOC that volatilize in the controlled spray booth zone (principally between the spray gun and the part) and the VOC that remain on the part (or panel) when the part (or panel) leaves the controlled spray booth zone. For solvent-borne coatings essentially all of the VOC associated with the coating solids deposited on a part (or panel) in a controlled spray booth zone that volatilize in the controlled spray booth zone pass through the waterwash and are exhausted from the controlled spray booth zone to the control device.

1.2.2 The VOC associated with the overspray coating solids in a controlled spray booth zone partition themselves between the VOC that volatilize in the controlled spray booth zone and the VOC that are still tied to the overspray coating solids when the overspray coating solids hit the waterwash. For solvent-borne coatings almost all of the VOC associated with the overspray coating solids that volatilize in the controlled spray booth zone pass through the waterwash and are exhausted from the controlled spray booth zone to the control device. The exact fate of the VOC still tied to the overspray coating solids when the overspray coating solids hit the waterwash is unknown. This procedure assumes that none of the VOC still tied to the overspray coating solids when the overspray coating solids hit the waterwash are captured and delivered to the control device. Much of this VOC may become entrained in the water along with the overspray coating solids. Most of the VOC that become entrained in the water along with the overspray coating solids leave the water, but the point at which this VOC leave the water is unknown. Some of the VOC still tied to the overspray coating solids when the overspray coating solids hit the waterwash may pass through the waterwash and be exhausted from the controlled spray booth zone to the control device.

1.2.3 This procedure assumes that the portion of the VOC associated with the overspray coating solids in a controlled spray booth zone that volatilizes in the controlled spray booth zone, passes through the waterwash and is exhausted from the controlled spray booth zone to the control device is equal to the portion of the VOC associated with the coating solids deposited on a part (or panel) in that controlled spray booth zone that volatilizes in the controlled spray booth zone, passes through the waterwash, and is exhausted from the controlled spray booth zone to the control device. This assumption is equivalent to treating all of the coating solids sprayed in the controlled spray booth zone as if they are deposited coating solids (*i.e.*, assuming 100 percent transfer efficiency) for purposes of using a panel test to determine spray booth capture efficiency.

1.2.4 This is a conservative (low) assumption for the portion of the VOC associated with the overspray coating solids in a controlled spray booth zone that volatilizes in the controlled spray booth zone. Thus, this assumption results in an underestimate of conservative capture efficiency. The overspray coating solids have more travel time and distance from the spray gun to the waterwash than the deposited coating solids have between the spray gun and the part (or panel). Therefore, the portion of the VOC associated with the overspray coating solids in a controlled spray booth zone that volatilizes in the controlled spray booth zone should be greater than the portion of the VOC associated with the coating solids deposited on a part (or panel) in that controlled spray booth zone that volatilizes in that controlled spray booth zone.

1.3 Summary of Procedure.

1.3.1 A panel test is performed to determine the mass of VOC that remains on the panel when the panel leaves a controlled spray booth zone. The total mass of VOC associated with the coating solids deposited on the panel is calculated.

1.3.2 The percent of the total VOC associated with the coating solids deposited on the panel in the controlled spray booth zone that remains on the panel when the panel leaves the controlled section of the spray booth is then calculated from the ratio of the two previously determined masses. The percent of the total VOC associated with the coating solids deposited on the panel in the controlled spray booth zone that is captured and delivered to the control device equals 100 minus this percentage. (The mass of VOC associated with the coating solids deposited on the panel which is volatilized and captured

sfrattini on LAPJZKW1R2 with $$_JOB
VerDate Sep<11>2014 09:16 Apr 04, 2023 Jkt 256165 PO 00000 Frm 00632 Fmt 8010 Sfmt 8002 Q:\40\256165.XXX PC31

in the controlled spray booth zone equals the difference between the total mass of VOC associated with the coating solids deposited on the panel and the mass of VOC remaining with the coating solids deposited on the panel when the panel leaves the controlled spray booth zone.)

1.3.3 The percent of the total VOC associated with the coating sprayed in the controlled spray booth zone that is captured and delivered to the control device is assumed to be equal to the percent of the total VOC associated with the coating solids deposited on the panel in the controlled spray booth zone that is captured and delivered to the control device. The percent of the total VOC associated with the coating sprayed in the entire spray booth that is captured and delivered to the control device can be calculated by multiplying the percent of the total VOC associated with the coating sprayed in the controlled spray booth zone that is captured and delivered to the control device by the fraction of coating sprayed in the spray booth that is sprayed in the controlled spray booth zone.

2.0 Procedure.

2.1 You may conduct panel testing to determine the capture efficiency of spray booth emissions. You must follow the instructions and calculations in this appendix A, and use the panel testing procedures in ASTM Method D5087–02, ''Standard Test Method for Determining Amount of Volatile Organic Compound (VOC) Released from Solvent-borne Automotive Coatings and Available for Removal in a VOC Control Device (Abatement)'' (incorporated by reference, *see* §63.14), or the guidelines presented in ''Protocol for Determining the Daily Volatile Organic Compound Emission Rate of Automobile and Light-Duty Truck Primer-Surfacer and Topcoat'' EPA–453/R–08–002 (incorporated by reference, *see* §63.14). You must weigh panels at the points described in section 2.5 of this appendix A and perform calculations as described in sections 3 and 4 of this appendix A. You may conduct panel tests on the production paint line in your facility or in a laboratory simulation of the production paint line in your facility.

2.2 You may conduct panel testing on representative coatings as described in ''Protocol for Determining the Daily Volatile Organic Compound Emission Rate of Automobile and Light-Duty Truck Primer-Surfacer and Topcoat'' EPA–453/R–08–002 (incorporated by reference, *see* §63.14). If you panel test representative coatings, then you may calculate either a unique percent capture efficiency value for each coating grouped with that representative coating, or a composite percent capture efficiency value for the group of coatings. If you panel test each coating, then you must convert the panel test result for each coating to a unique percent capture efficiency value for that coating.

2.3 Identification of Controlled Spray Booth Zones.

You must identify each controlled spray booth zone or each group of contiguous controlled spray booth zones to be tested. (For example, a controlled bell zone immediately followed by a controlled robotic zone.) Separate panel tests are required for non-contiguous controlled spray booth zones. The flash zone between the last basecoat zone and the first clearcoat zone makes these zones non-contiguous.

2.4 Where to Apply Coating to the Panel.

If you are conducting a panel test for a single controlled spray booth zone, then you must apply coating to the panel only in that controlled spray booth zone. If you are conducting a panel test for a group of contiguous controlled spray booth zones, then you must apply coating to the panel only in that group of contiguous controlled spray booth zones.

2.5 How to Process and When to Weigh the Panel.

The instructions in this section pertain to panel testing of coating, i, or of the coating representing the group of coatings that includes coating, i.

2.5.1 You must weigh the blank panel. (Same as in bake oven panel test.) The mass of the blank panel is represented by $W_{blank,i}$ (grams).

2.5.2 Apply coating, i, or the coating representing coating, i, to the panel in the controlled spray booth zone or group of contiguous controlled spray booth zones being tested (in plant test), or in a simulation of the controlled spray booth zone or group of contiguous controlled spray booth zones being tested (laboratory test).

2.5.3 Remove and weigh the wet panel as soon as the wet panel leaves the controlled spray booth zone or group of contiguous controlled spray booth zones being tested. (Different than bake oven panel test.) This weighing must be conducted quickly to avoid further evaporation of VOC. The mass of the wet panel is represented by $W_{wet,i}$ (grams).

2.5.4 Return the wet panel to the point in the coating process or simulation of the coating process where it was removed for weighing.

2.5.5 Allow the panel to travel through the rest of the coating process in the plant or laboratory simulation of the coating process. You must not apply any more coating to the panel after it leaves the controlled spray booth zone (or group of contiguous controlled spray booth zones) being tested. The rest of the coating process or simulation of the coating process consists of:

2.5.5.1 All of the spray booth zone(s) or simulation of all of the spray booth zone(s) located after the controlled spray booth zone or group of contiguous controlled spray

sfrattini on LAPJZKW1R2 with $$_JOB
VerDate Sep<11>2014 09:16 Apr 04, 2023 Jkt 256165 PO 00000 Frm 00633 Fmt 8010 Sfmt 8002 Q:\40\256165.XXX PC31

booth zones being tested and before the bake oven where the coating applied to the panel is cured,

2.5.5.2 All of the flash-off area(s) or simulation of all of the flash-off area(s) located after the controlled spray booth zone or group of contiguous controlled spray booth zones being tested and before the bake oven where the coating applied to the panel is cured, and

2.5.5.3 The bake oven or simulation of the bake oven where the coating applied to the panel is cured.

2.5.6 After the panel exits the bake oven, you must cool and weigh the baked panel. (Same as in bake oven panel test.) The mass of the baked panel is represented by $W_{baked,i}$ (grams).

3.0 Panel Calculations.

The instructions in this section pertain to panel testing of coating, i, or of the coating representing the group of coatings that includes coating, i.

3.1 The mass of coating solids (from coating, i, or from the coating representing coating, i, in the panel test) deposited on the panel equals the mass of the baked panel minus the mass of the blank panel as shown in Equation A–1.

$$W_{sdep,i} = W_{baked,i} - W_{blank,i} \qquad \text{(Eq. A-1)}$$

Where:

$W_{sdep,\ i}$ = Mass of coating solids (from coating, i, or from the coating representing coating, i, in the panel test) deposited on the panel, grams.

3.2 The mass of VOC (from coating, i, or from the coating representing coating, i, in the panel test) remaining on the wet panel when the wet panel leaves the controlled spray booth zone or group of contiguous controlled spray booth zones being tested equals the mass of the wet panel when the wet panel leaves the controlled spray booth zone or group of contiguous controlled spray booth zones being tested minus the mass of the baked panel as shown in Equation A–2.

$$W_{rem,i} = W_{wet,i} - W_{baked,i} \qquad \text{(Eq. A-2)}$$

Where:

$W_{rem,\ i}$ = Mass of VOC (from coating, i, or from the coating representing coating, i, in the panel test) remaining on the wet panel when the wet panel leaves the controlled spray booth zone or group of contiguous controlled spray booth zones being tested, grams.

3.3 Calculate the mass of VOC (from coating, i, or from the coating representing coating, i, in the panel test) remaining on the wet panel when the wet panel leaves the controlled spray booth zone or group of contiguous controlled spray booth zones being tested per mass of coating solids deposited on the panel as shown in Equation A–3.

$$P_{m,i} = \left(W_{rem,i}\right) / \left(W_{sdep,i}\right) \qquad \text{(Eq. A-3)}$$

Where:

$P_{m,\ i}$ = Mass of VOC (from coating, i, or from the coating representing coating, i, in the panel test) remaining on the wet panel when the wet panel leaves the controlled spray booth zone or group of contiguous controlled spray booth zones being tested per mass of coating solids deposited on the panel, grams of VOC remaining per gram of coating solids deposited.

$W_{rem,\ i}$ = Mass of VOC (from coating, i, or from the coating representing coating, i, in the panel test) remaining on the wet panel when the wet panel leaves the controlled spray booth zone or group of contiguous controlled spray booth zones being tested, grams.

$W_{sdep,\ i}$ = Mass of coating solids (from coating, i, or from the coating representing coating, i, in the panel test) deposited on the panel, grams.

4.0 Converting Panel Result to Percent Capture.

The instructions in this section pertain to panel testing of for coating, i, or of the coating representing the group of coatings that includes coating, i.

4.1 If you panel test representative coatings, then you may convert the panel test result for each representative coating from section 3.3 of this appendix A either to a unique percent capture efficiency value for each coating grouped with that representative coating by using coating specific values for the mass fraction coating solids and mass fraction VOC in section 4.2 of this appendix A, or to a composite percent capture efficiency value for the group of coatings by using the average values for the group of coatings for mass fraction coating solids and mass fraction VOC in section 4.2 of this appendix A. If you panel test each coating, then you must convert the panel test result for each coating to a unique percent capture efficiency value by using coating specific values for the mass fraction coating solids and mass fraction VOC in section 4.2 of this appendix A. The mass fraction of VOC in the

sfrattini on LAPJZKW1R2 with $$_JOB
VerDate Sep<11>2014 09:16 Apr 04, 2023 Jkt 256165 PO 00000 Frm 00634 Fmt 8010 Sfmt 8002 Q:\40\256165.XXX PC31
ER26AP04.028</MATH> ER26AP04.029</MATH> ER26AP04.030</MATH>

coating and the mass fraction of solids in the coating must be determined by Method 24 (appendix A–7 to 40 CFR part 60) or by following the guidelines for combining analytical VOC content and formulation solvent content presented in ''Protocol for Determining the Daily Volatile Organic Compound Emission Rate of Automobile and Light-Duty Truck Primer-Surfacer and Topcoat'' EPA–453/R–08–002 (incorporated by reference, *see* §63.14).

4.2 The percent of VOC for coating, i, or composite percent of VOC for the group of coatings including coating, i, associated with the coating solids deposited on the panel that remains on the wet panel when the wet panel leaves the controlled spray booth zone or group of contiguous controlled spray booth zones being tested is calculated using Equation A–4.

$$Pvoc_{pan,i} = \left(P_{m,i}\right)\left(W_{s,i}\right)(100)/\left(Wvoc_{c,i}\right) \qquad \text{(Eq. A-4)}$$

Where:

$Pvoc_{pan,\ i}$ = Percent of VOC for coating, i, or composite percent of VOC for the group of coatings including coating, i, associated with the coating solids deposited on the panel that remains on the wet panel when the wet panel leaves the controlled spray booth zone (or group of contiguous controlled spray booth zones) being tested, percent.

$P_{m,\ i}$ = Mass of VOC (from coating, i, or from the coating representing coating, i, in the panel test) remaining on the wet panel when the wet panel leaves the controlled spray booth zone or group of contiguous controlled spray booth zones being tested per mass of coating solids deposited on the panel, grams of VOC remaining per gram of coating solids deposited.

$W_{s,\ i}$ = Mass fraction of coating solids for coating, i, or average mass fraction of coating solids for the group of coatings including coating, i, grams coating solids per gram coating, determined by EPA Method 24 (appendix A–7 to 40 CFR part 60) or by following the guidelines for combining analytical VOC content and formulation solvent content presented in ''Protocol for Determining the Daily Volatile Organic Compound Emission Rate of Automobile and Light-Duty Truck Primer-Surfacer and Topcoat,'' EPA–453/R–08–002 (incorporated by reference, *see* §63.14).

$Wvoc_{c,\ i}$ = Mass fraction of VOC in coating, i, or average mass fraction of VOC for the group of coatings including coating, i, grams VOC per grams coating, determined by EPA Method 24 (appendix A–7 to 40 CFR part 60) or the guidelines for combining analytical VOC content and formulation solvent content presented in ''Protocol for Determining the Daily Volatile Organic Compound Emission Rate of Automobile and Light-Duty Truck Topcoat Operations,'' EPA–450/3–88–018 (incorporated by reference, *see* §63.14).

4.3 The percent of VOC for coating, i, or composite percent of VOC for the group of coatings including coating, i, associated with the coating sprayed in the controlled spray booth zone (or group of contiguous controlled spray booth zones) being tested that is captured in the controlled spray booth zone or group of contiguous controlled spray booth zones being tested, $CE_{zone,i}$ (percent), is calculated using Equation A–5.

$$CE_{zone,i} = 100 - Pvoc_{pan,i} \qquad \text{(Eq. A-5)}$$

Where:

$CE_{zone,\ i}$ = Capture efficiency for coating, i, or for the group of coatings including coating, i, in the controlled spray booth zone or group of contiguous controlled spray booth zones being tested as a percentage of the VOC in the coating, i, or of the group of coatings including coating, i, sprayed in the controlled spray booth zone or group of contiguous controlled spray booth zones being tested, percent.

4.4 Calculate the percent of VOC for coating, i, or composite percent of VOC for the group of coatings including coating, i, associated with the entire volume of coating, i, or with the total volume of all of the coatings grouped with coating, i, sprayed in the entire spray booth that is captured in the controlled spray booth zone or group of contiguous controlled spray booth zones being tested, using Equation A–6. The volume of coating, i, or of the group of coatings including coating, i, sprayed in the controlled spray booth zone or group of contiguous controlled spray booth zones being tested, and the volume of coating, i, or of the group of coatings including coating, i, sprayed in the entire spray booth may be determined from gun on times and fluid flow rates or from direct measurements of coating usage.

sfrattini on LAPJZKW1R2 with $$_JOB
VerDate Sep<11>2014 09:16 Apr 04, 2023 Jkt 256165 PO 00000 Frm 00635 Fmt 8010 Sfmt 8002 Q:\40\256165.XXX PC31
ER26AP04.031</MATH> ER26AP04.032</MATH>

$$CE_i = \left(CE_{zone,i}\right)\left(V_{zone,i}\right)/\left(V_{booth,i}\right) \qquad \text{S(Eq. A-6)}$$

Where:

CE_i = Capture efficiency for coating, i, or for the group of coatings including coating, i, in the controlled spray booth zone (or group of contiguous controlled spray booth zones) being tested as a percentage of the VOC in the coating, i, or of the group of coatings including coating, i, sprayed in the entire spray booth in which the controlled spray booth zone (or group of contiguous controlled spray booth zones) being tested, percent.

$V_{zone,\ i}$ = Volume of coating, i, or of the group of coatings including coating, i, sprayed in the controlled spray booth zone or group of contiguous controlled spray booth zones being tested, liters.

$V_{booth,\ i}$ = Volume of coating, i, or of the group of coatings including coating, i, sprayed in the entire spray booth containing the controlled spray booth zone (or group of contiguous controlled spray booth zones) being tested, liters.

4.5 If you conduct multiple panel tests for the same coating or same group of coatings in the same spray booth (either because the coating or group of coatings is controlled in non-contiguous zones of the spray booth, or because you choose to conduct separate panel tests for contiguous controlled spray booth zones), then you may add the result from section 4.4 for each such panel test to get the total capture efficiency for the coating or group of coatings over all of the controlled zones in the spray booth for the coating or group of coatings.

[69 FR 22623, Apr. 26, 2004, as amended at 85 FR 41137, July 8, 2020; 86 FR 66040, Nov. 19, 2021]

Subpart JJJJ—National Emission Standards for Hazardous Air Pollutants: Paper and Other Web Coating

SOURCE: 67 FR 72341, Dec. 4, 2002, unless otherwise noted.

WHAT THIS SUBPART COVERS

§ 63.3280 What is in this subpart?

This subpart describes the actions you must take to reduce emissions of organic hazardous air pollutants (HAP) from paper and other web coating operations. This subpart establishes emission standards for web coating lines and specifies what you must do to comply if you own or operate a facility with web coating lines that is a major source of HAP. Certain requirements apply to all who are subject to this subpart; others depend on the means you use to comply with an emission standard.

§ 63.3290 Does this subpart apply to me?

The provisions of this subpart apply to each new and existing facility that is a major source of HAP, as defined in § 63.2, at which web coating lines are operated.

§ 63.3300 Which of my emission sources are affected by this subpart?

The affected source subject to this subpart is the collection of all web coating lines at your facility. This includes web coating lines engaged in the coating of metal webs that are used in flexible packaging, and web coating lines engaged in the coating of fabric substrates for use in pressure sensitive tape and abrasive materials. Web coating lines specified in paragraphs (a) through (g) of this section are not part of the affected source of this subpart.

(a) Any web coating line that is stand-alone equipment under subpart KK of this part (National Emission Standards for Hazardous Air Pollutants (NESHAP) for the Printing and Publishing Industry) which the owner or operator includes in the affected source under subpart KK.

(b) Any web coating line that is a product and packaging rotogravure or wide-web flexographic press under subpart KK of this part (NESHAP for the Printing and Publishing Industry) which is included in the affected source under subpart KK.

(c) Web coating in lithography, screenprinting, letterpress, and narrow-web flexographic printing processes.

(d) Any web coating line subject to subpart EE of this part (NESHAP for Magnetic Tape Manufacturing Operations).

sfrattini on LAPJZKW1R2 with $$_JOB
VerDate Sep<11>2014 09:16 Apr 04, 2023 Jkt 256165 PO 00000 Frm 00636 Fmt 8010 Sfmt 8010 Q:\40\256165.XXX PC31
ER26AP04.033</MATH>

(e) Any web coating line subject to subpart SSSS of this part (NESHAP for Surface Coating of Metal Coil).

(f) Any web coating line subject to subpart OOOO of this part (NESHAP for the Printing, Coating, and Dyeing of Fabrics and Other Textiles). This includes any web coating line that coats both a paper or other web substrate and a fabric or other textile substrate, except for a fabric substrate used for pressure sensitive tape and abrasive materials.

(g) Any web coating line that is defined as research or laboratory equipment in §63.3310.

(h) Any web coating line that coats both paper or a web, and another substrate such as fabric, may comply with the subpart of this part that applies to the predominant activity conducted on the affected source. Predominant activity for this subpart is 90 percent of the mass of substrate coated during the compliance period. For example, a web coating line that coats 90 percent or more of a paper substrate, and 10 percent or less of a fabric or other textile substrate, would be subject to this subpart and not subpart OOOO of this part. You may use data for any reasonable time period of at least one year in determining the relative amount of coating activity, as long as they are expected to represent the way the source will continue to operate in the future. You must demonstrate and document the predominant activity annually.

(i) Any web coating line subject to this part that is modified to include printing activities, may continue to demonstrate compliance with this part, in lieu of demonstrating compliance with subpart KK of this part. Any web coating line with product and packaging rotogravure print station(s) and/or a wide-web flexographic print station(s) that is subject to this subpart may elect to continue demonstrating compliance with this subpart in lieu of subpart KK of this part, if the mass of the materials applied to the line's print station(s) in a month ever exceed 5 percent of the total mass of materials applied onto the line during the same period.

(j) If all of the subject web coating lines at your facility utilize non-HAP coatings, you can become exempt from the reporting requirements of this subpart, provided you submit a one-time report as required in §63.3370(s) to your permitting authority documenting the use of only non-HAP coatings.

[67 FR 72341, Dec. 4, 2002, as amended at 71 FR 29805, May 24, 2006; 85 FR 41295, July 9, 2020]

§63.3310 What definitions are used in this subpart?

All terms used in this subpart that are not defined in this section have the meaning given to them in the Clean Air Act (CAA) and in subpart A of this part.

Always-controlled work station means a work station associated with a dryer from which the exhaust is delivered to a control device with no provision for the dryer exhaust to bypass the control device unless there is an interlock to interrupt and prevent continued coating during a bypass. Sampling lines for analyzers, relief valves needed for safety purposes, and periodic cycling of exhaust dampers to ensure safe operation are not considered bypass lines.

Applied means, for the purposes of this subpart, the amount of organic HAP, coating material, or coating solids (as appropriate for the emission standards in §63.3320(b)) used by the affected source during the compliance period.

As-applied means the condition of a coating at the time of application to a substrate, including any added solvent.

As-purchased means the condition of a coating as delivered to the user.

Capture efficiency means the fraction of all organic HAP emissions generated by a process that is delivered to a control device, expressed as a percentage.

Capture system means a hood, enclosed room, or other means of collecting organic HAP emissions into a closed-vent system that exhausts to a control device.

Car-seal means a seal that is placed on a device that is used to change the position of a valve or damper (*e.g.*, from open to closed) in such a way that the position of the valve or damper cannot be changed without breaking the seal.

Coating material(s) means all liquid or semi-liquid materials (including the

sfrattini on LAPJZKW1R2 with $$_JOB
VerDate Sep<11>2014 09:16 Apr 04, 2023 Jkt 256165 PO 00000 Frm 00637 Fmt 8010 Sfmt 8010 Q:\40\256165.XXX PC31

solids fraction of those materials as applied), such as inks, varnishes, adhesives (including hot melt adhesives or other hot melt materials), primers, solvents, reducers, and other materials applied to a substrate via a web coating line. Materials used to form a substrate or applied via vapor deposition, and dry abrasive materials deposited on top of a coated web, are not considered coating materials.

Control device means a device such as a solvent recovery device or oxidizer which reduces the organic HAP in an exhaust gas by recovery or by destruction.

Control device efficiency means the ratio of organic HAP emissions recovered or destroyed by a control device to the total organic HAP emissions that are introduced into the control device, expressed as a percentage.

Day means a 24-consecutive-hour period.

Deviation means any instance in which an affected source, subject to this subpart, or an owner or operator of such a source:

(1) Fails to meet any requirement or obligation established by this subpart including, but not limited to, any emission limitation (including any operating limit) or work practice standard;

(2) Fails to meet any term or condition that is adopted to implement an applicable requirement in this subpart and that is included in the operating permit for any affected source required to obtain such a permit; or

(3) Fails to meet any emission limitation (including any operating limit) or work practice standard in this subpart during start-up, shutdown, or malfunction, regardless of whether or not such failure is permitted by this subpart.

Existing affected source means any affected source the construction or reconstruction of which is commenced on or before September 13, 2000, and has not undergone reconstruction as defined in § 63.2.

Fabric means any woven, knitted, plaited, braided, felted, or non-woven material made of filaments, fibers, or yarns including thread. This term includes material made of fiberglass, natural fibers, synthetic fibers, or composite materials.

Facility means all contiguous or adjoining property that is under common ownership or control, including properties that are separated only by a road or other public right-of-way.

Flexible packaging means any package or part of a package the shape of which can be readily changed. Flexible packaging includes, but is not limited to, bags, pouches, labels, liners and wraps utilizing paper, plastic, film, aluminum foil, metalized or coated paper or film, or any combination of these materials.

Formulation data means data on the organic HAP mass fraction, volatile matter mass fraction, or coating solids mass fraction of a material that is generated by the manufacturer or means other than a test method specified in this subpart or an approved alternative method.

HAP means hazardous air pollutants.

HAP applied means the organic HAP content of all coating materials applied to a substrate by a web coating line at an affected source.

Intermittently-controlled work station means a work station associated with a dryer with provisions for the dryer exhaust to be delivered to or diverted from a control device through a bypass line, depending on the position of a valve or damper. Sampling lines for analyzers, relief valves needed for safety purposes, and periodic cycling of exhaust dampers to ensure safe operation are not considered bypass lines.

Metal coil means a continuous metal strip that is at least 0.15 millimeter (0.006 inch) thick which is packaged in a roll or coil prior to coating. After coating, it may or may not be rewound into a roll or coil. Metal coil does not include metal webs that are coated for use in flexible packaging.

Month means a calendar month or a pre-specified period of 28 days to 35 days to allow for flexibility in recordkeeping when data are based on a business accounting period.

Never-controlled work station means a work station that is not equipped with provisions by which any emissions, including those in the exhaust from any associated dryer, may be delivered to a control device.

sfrattini on LAPJZKW1R2 with $$_JOB
VerDate Sep<11>2014 09:16 Apr 04, 2023 Jkt 256165 PO 00000 Frm 00638 Fmt 8010 Sfmt 8010 Q:\40\256165.XXX PC31

New affected source means any affected source the construction or reconstruction of which is commenced after September 13, 2000.

Overall organic HAP control efficiency means the total efficiency of a capture and control system.

Pressure sensitive tape means a flexible backing material with a pressure-sensitive adhesive coating on one or both sides of the backing. Examples include, but are not limited to, duct/duct insulation tape and medical tape.

Research or laboratory equipment means any equipment for which the primary purpose is to conduct research and development into new processes and products where such equipment is operated under the close supervision of technically trained personnel and is not engaged in the manufacture of products for commercial sale in commerce except in a *de minimis* manner.

Rewind or cutting station means a unit from which substrate is collected at the outlet of a web coating line.

Uncontrolled coating line means a coating line consisting of only never-controlled work stations.

Unwind or feed station means a unit from which substrate is fed to a web coating line.

Web means a continuous substrate (*e.g.*, paper, film, foil) which is flexible enough to be wound or unwound as rolls.

Web coating line means any number of work stations, of which one or more applies a continuous layer of liquid or semi-liquid coating material across the entire width or any portion of the width of a web substrate, and any associated curing/drying equipment between an unwind or feed station and a rewind or cutting station.

Work station means a unit on a web coating line where coating material is deposited onto a web substrate.

[67 FR 72341, Dec. 4, 2002, as amended at 85 FR 41296, July 9, 2020]

EMISSION STANDARDS AND COMPLIANCE DATES

§ 63.3320 What emission standards must I meet?

(a) If you own or operate any affected source that is subject to the requirements of this subpart, you must comply with these requirements on and after the compliance dates as specified in § 63.3330.

(b) You must limit organic HAP emissions to the level specified in paragraph (b)(1), (2), (3), or (4) of this section for all periods of operation, including startup, shutdown, and malfunction (SSM).

(1) No more than 5 percent of the organic HAP applied for each month (95 percent reduction) at existing affected sources, and no more than 2 percent of the organic HAP applied for each month (98 percent reduction) at new affected sources; or

(2) No more than 4 percent of the mass of coating materials applied for each month at existing affected sources, and no more than 1.6 percent of the mass of coating materials applied for each month at new affected sources; or

(3) No more than 20 percent of the mass of coating solids applied for each month at existing affected sources, and no more than 8 percent of the coating solids applied for each month at new affected sources.

(4) If you use an oxidizer to control organic HAP emissions, operate the oxidizer such that an outlet organic HAP concentration of no greater than 20 parts per million by volume (ppmv) on a dry basis is achieved and the efficiency of the capture system is 100 percent.

(c) You must demonstrate compliance with this subpart by following the procedures in § 63.3370.

[67 FR 72341, Dec. 4, 2002, as amended at 85 FR 41296, July 9, 2020]

§ 63.3321 What operating limits must I meet?

(a) For any web coating line or group of web coating lines for which you use add-on control devices to demonstrate compliance with the emission standards in § 63.3320, unless you use a solvent recovery system and conduct a liquid-liquid material balance, you must meet the operating limits specified in Table 1 to this subpart or according to paragraph (b) of this section. These operating limits apply to emission capture systems and control devices used to demonstrate compliance with this subpart, and you must

sfrattini on LAPJZKW1R2 with $$_JOB
VerDate Sep<11>2014 09:16 Apr 04, 2023 Jkt 256165 PO 00000 Frm 00639 Fmt 8010 Sfmt 8010 Q:\40\256165.XXX PC31

establish the operating limits during the performance test according to the requirements in § 63.3360(e)(3). You must meet the operating limits at all times after you establish them.

(b) If you use an add-on control device other than those listed in Table 1 to this subpart or wish to monitor an alternative parameter and comply with a different operating limit, you must apply to the Administrator for approval of alternative monitoring under § 63.8(f).

[67 FR 72341, Dec. 4, 2002, as amended at 85 FR 41296, July 9, 2020]

§ 63.3330 When must I comply?

(a) For affected sources which commenced construction or reconstruction prior to September 19, 2019, you must comply as follows:

(1) Before July 9, 2021, the affected coating operation(s) must be in compliance with the applicable emission limit in § 63.3320 at all times, except during periods of SSM. On and after July 9, 2021, the affected coating operation(s) must be in compliance with the applicable emission limit in § 63.3320 at all times, including periods of SSM.

(2) A periodic emissions performance test must be performed by July 9, 2023, or within 60 months of the previous test, whichever is later, and subsequent tests no later than 60 months thereafter, as required in § 63.3360. Performance testing for HAP or VOC destruction efficiency required by state agencies can be used to meet this requirement.

(3) After July 9, 2021, you must electronically submit initial notifications, notifications of compliance status, performance evaluation reports, and performance test reports, as required in § 63.3400. Semiannual compliance reports must be submitted electronically for the first full semiannual compliance period after the template has been available in the Compliance and Emissions Data Reporting Interface (CEDRI) for 1 year.

(b) For new affected sources which commenced construction or reconstruction after September 19, 2019, you must comply as indicated in paragraphs (b)(1) through (3) of this section. Existing affected sources which have undergone reconstruction as defined in § 63.2 are subject to the requirements for new affected sources. The costs associated with the purchase and installation of air pollution control equipment are not considered in determining whether the existing affected source has been reconstructed. Additionally, the costs of retrofitting and replacing of equipment that is installed specifically to comply with this subpart are not considered reconstruction costs.

(1) The coating operation(s) must be in compliance with the applicable emission limit in § 63.3320 at all times, including periods of SSM, starting July 9, 2020, or immediately upon startup, whichever is later.

(2) You must complete any initial performance test required in § 63.3360 within the time limits specified in § 63.7(a)(2), and subsequent tests no later than 60 months thereafter.

(3) You must electronically submit initial notifications, notifications of compliance status, performance evaluation reports, and performance test reports as required in § 63.3400 starting July 9, 2020, or immediately upon startup, whichever is later. Semiannual compliance reports must be submitted electronically for the first full semiannual compliance period after the template has been available in CEDRI for 1 year.

[85 FR 41296, July 9, 2020]

General Requirements for Compliance With the Emission Standards and for Monitoring and Performance Tests

§ 63.3340 What general requirements must I meet to comply with the standards?

(a) Before July 9, 2021, for each existing source for which construction or reconstruction commenced on or before September 19, 2019, you must be in compliance with the emission limits and operating limits in this subpart at all times, except during periods of SSM. On and after July 9, 2021, for each such source you must be in compliance with the emission limits and operating limits in this subpart at all times. For new and reconstructed sources for which construction or reconstruction commenced after September 19, 2019, you must be in compliance with the

sfrattini on LAPJZKW1R2 with $$_JOB
VerDate Sep<11>2014 09:16 Apr 04, 2023 Jkt 256165 PO 00000 Frm 00640 Fmt 8010 Sfmt 8010 Q:\40\256165.XXX PC31

emission limits and operating limits in this subpart at all times, starting July 9, 2020, or immediately upon startup, whichever is later.

(b) For affected sources as of September 19, 2019, before July 9, 2021, you must always operate and maintain your affected source, including all air pollution control and monitoring equipment you use for purposes of complying with this subpart, according to the provisions in § 63.6(e)(1)(i). On and after July 9, 2021, for such sources and on July 9, 2020, or immediately upon startup, whichever is later, for new or reconstructed affected sources, you must always operate and maintain your affected source, including associated air pollution control equipment and monitoring equipment, in a manner consistent with safety and good air pollution control practices for minimizing emissions. The general duty to minimize emissions does not require the owner or operator to make any further efforts to reduce emissions if levels required by the applicable standard have been achieved. Determination of whether a source is operating in compliance with operation and maintenance requirements will be based on information available to the Administrator which may include, but is not limited to, monitoring results, review of operation and maintenance procedures, review of operation and maintenance records, and inspection of the source.

(c) You must conduct each performance test required by § 63.3360 according to the requirements in § 63.3360(e)(2) and under the conditions in this section unless you obtain a waiver of the performance test according to the provisions in § 63.7(h).

(1) Representative coating operation operating conditions. You must conduct the performance test under representative operating conditions for the coating operation. Operations during periods of startup, shutdown, and nonoperation do not constitute representative conditions. You may not conduct performance tests during periods of malfunction. You must record the process information that is necessary to document operating conditions during the test and explain why the conditions represent normal operation. Upon request, you shall make available to the Administrator such records as may be necessary to determine the conditions of performance tests.

(2) Representative emission capture system and add-on control device operating conditions. You must conduct the performance test when the emission capture system and add-on control device are operating at a representative flow rate, and the add-on control device is operating at a representative inlet concentration. Representative conditions exclude periods of startup and shutdown. You may not conduct performance tests during periods of malfunction. You must record information that is necessary to document emission capture system and add-on control device operating conditions during the test and explain why the conditions represent normal operation.

(d) Table 2 to this subpart specifies the provisions of subpart A of this part that apply if you are subject to subpart JJJJ.

[85 FR 41296, July 9, 2020]

§ 63.3350 If I use a control device to comply with the emission standards, what monitoring must I do?

(a) A summary of monitoring you must do follows:

If you operate a web coating line, and have the following:	Then you must:
(1) Intermittently-controlled work stations	Record parameters related to possible exhaust flow bypass of control device and to coating use (§ 63.3350(c)).
(2) Solvent recovery unit	Operate continuous emission monitoring system and perform quarterly audits or determine volatile matter recovered and conduct a liquid-liquid material balance (§ 63.3350(d)).
(3) Control Device	Operate continuous parameter monitoring system (§ 63.3350(e)).
(4) Capture system	Monitor capture system operating parameter (§ 63.3350(f)).

sfrattini on LAPJZKW1R2 with $$_JOB
VerDate Sep<11>2014 09:16 Apr 04, 2023 Jkt 256165 PO 00000 Frm 00641 Fmt 8010 Sfmt 8010 Q:\40\256165.XXX PC31

(b) Following the date on which the initial or periodic performance test of a control device is completed to demonstrate continuing compliance with the standards, you must monitor and inspect each capture system and each control device used to comply with § 63.3320. You must install and operate the monitoring equipment as specified in paragraphs (c) and (f) of this section.

(c) *Bypass and coating use monitoring.* If you own or operate web coating lines with intermittently-controlled work stations, you must monitor bypasses of the control device and the mass of each coating material applied at the work station during any such bypass. If using a control device for complying with the requirements of this subpart, you must demonstrate that any coating material applied on a never-controlled work station or an intermittently-controlled work station operated in bypass mode is allowed in your compliance demonstration according to § 63.3370(o) and (p). The bypass monitoring must be conducted using at least one of the procedures in paragraphs (c)(1) through (4) of this section for each work station and associated dryer.

(1) *Flow control position indicator.* Install, calibrate, maintain, and operate according to the manufacturer's specifications a flow control position indicator that provides a record indicating whether the exhaust stream from the dryer was directed to the control device or was diverted from the control device. The time and flow control position must be recorded at least once per hour as well as every time the flow direction is changed. A flow control position indicator must be installed at the entrance to any bypass line that could divert the exhaust stream away from the control device to the atmosphere.

(2) *Car-seal or lock-and-key valve closures.* Secure any bypass line valve in the closed position with a car-seal or a lock-and-key type configuration. A visual inspection of the seal or closure mechanism must be performed at least once every month to ensure that the valve or damper is maintained in the closed position, and the exhaust stream is not diverted through the bypass line.

(3) *Valve closure continuous monitoring.* Ensure that any bypass line valve or damper is in the closed position through continuous monitoring of valve position when the emission source is in operation and is using a control device for compliance with the requirements of this subpart. The monitoring system must be inspected at least once every month to verify that the monitor will indicate valve position.

(4) *Automatic shutdown system.* Use an automatic shutdown system in which the web coating line is stopped when flow is diverted away from the control device to any bypass line when the control device is in operation. The automatic system must be inspected at least once every month to verify that it will detect diversions of flow and would shut down operations in the event of such a diversion.

(d) *Solvent recovery unit.* If you own or operate a solvent recovery unit to comply with § 63.3320, you must meet the requirements in either paragraph (d)(1) or (2) of this section depending on how control efficiency is determined.

(1) *Continuous emission monitoring system (CEMS).* If you are demonstrating compliance with the emission standards in § 63.3320 through continuous emission monitoring of a control device, you must install, calibrate, operate, and maintain the CEMS according to paragraphs (d)(1)(i) through (iii) of this section.

(i) Measure the total organic volatile matter mass flow rate at both the control device inlet and the outlet such that the reduction efficiency can be determined. Each continuous emission monitor must comply with performance specification 6, 8, or 9 of 40 CFR part 60, appendix B, as appropriate.

(ii) You must follow the quality assurance procedures in procedure 1, appendix F of 40 CFR part 60. In conducting the quarterly audits of the monitors as required by procedure 1, appendix F, you must use compounds representative of the gaseous emission stream being controlled.

(iii) You must have valid data from at least 90 percent of the hours when the process is operated. Invalid or missing data should be reported as a deviation in the semiannual compliance report.

sfrattini on LAPJZKW1R2 with $$_JOB
VerDate Sep<11>2014 09:16 Apr 04, 2023 Jkt 256165 PO 00000 Frm 00642 Fmt 8010 Sfmt 8010 Q:\40\256165.XXX PC31

(2) *Liquid-liquid material balance.* If you are demonstrating compliance with the emission standards in §63.3320 through liquid-liquid material balance, you must install, calibrate, maintain, and operate according to the manufacturer's specifications a device that indicates the cumulative amount of volatile matter recovered by the solvent recovery device on a monthly basis. The device must be certified by the manufacturer to be accurate to within ±2.0 percent by mass.

(e) *Continuous parameter monitoring system (CPMS).* If you are using a control device to comply with the emission standards in §63.3320, you must install, operate, and maintain each CPMS specified in paragraphs (e)(10) and (11) and (f) of this section according to the requirements in paragraphs (e)(1) through (9) of this section. You must install, operate, and maintain each CPMS specified in paragraph (c) of this section according to paragraphs (e)(5) through (8) of this section.

(1) Each CPMS must complete a minimum of one cycle of operation for each successive 15-minute period. You must have a minimum of four equally spaced successive cycles of CPMS operation to have a valid hour of data.

(2) You must have valid data from at least 90 percent of the hours when the process operated.

(3) You must determine the hourly average of all recorded readings according to paragraphs (e)(3)(i) and (ii) of this section.

(i) To calculate a valid hourly value, you must have at least three of four equally spaced data values from that hour from a continuous monitoring system (CMS) that is not out-of-control.

(ii) Provided all of the readings recorded in accordance with paragraph (e)(3) of this section clearly demonstrate continuous compliance with the standard that applies to you, then you are not required to determine the hourly average of all recorded readings.

(4) You must determine the block 3-hour average of all recorded readings for each operating period. To calculate the average for each 3-hour averaging period, you must have at least two of three of the hourly averages for that period using only average values that are based on valid data (*i.e.*, not from out-of-control periods).

(5) Except for temperature sensors, you must develop a quality control program that must contain, at a minimum, a written protocol that describes the procedures for each of the operations in §63.3350(e)(5)(i) through (vi). The owner or operator shall keep these written procedures on record for the life of the affected source or until the affected source is no longer subject to the provisions of this part, to be made available for inspection, upon request, by the Administrator. If the performance evaluation plan is revised, the owner or operator shall keep previous (*i.e.*, superseded) versions of the performance evaluation plan on record to be made available for inspection, upon request, by the Administrator, for a period of 5 years after each revision to the plan. For temperature sensors, you must follow the requirements in §63.3350(e)(10).

(i) Initial and any subsequent calibration of the continuous monitoring system (CMS);

(ii) Determination and adjustment of the calibration drift of the CMS;

(iii) Preventative maintenance of the CMS, including spare parts inventory;

(iv) Data recording, calculations, and reporting;

(v) Accuracy audit procedures, including sampling and analysis methods; and

(vi) Program of corrective action for a malfunctioning CMS.

(6) You must record the results of each inspection, calibration, and validation check of the CPMS.

(7) At all times, you must maintain the monitoring system in proper working order including, but not limited to, maintaining necessary parts for routine repairs of the monitoring equipment.

(8) Except for monitoring malfunctions, associated repairs, or required quality assurance or control activities (including calibration checks or required zero and span adjustments), you must conduct all monitoring at all times that the unit is operating. Data recorded during monitoring malfunctions, associated repairs, out-of-control periods, or required quality assurance or control activities shall not be used

sfrattini on LAPJZKW1R2 with $$_JOB
VerDate Sep<11>2014 09:16 Apr 04, 2023 Jkt 256165 PO 00000 Frm 00643 Fmt 8010 Sfmt 8010 Q:\40\256165.XXX PC31

for purposes of calculating the emissions concentrations and percent reductions specified in § 63.3370. You must use all the valid data collected during all other periods in assessing compliance of the control device and associated control system. A monitoring malfunction is any sudden, infrequent, not reasonably preventable failure of the monitoring system to provide valid data. Monitoring failures that are caused in part by poor maintenance or careless operation are not malfunctions.

(9) Any averaging period for which you do not have valid monitoring data and such data are required constitutes a deviation, and you must notify the Administrator in accordance with § 63.3400(c).

(10) *Oxidizer*. If you are using an oxidizer to comply with the emission standards of this subpart, you must comply with paragraphs (e)(10)(i) through (vi) of this section.

(i) Install, maintain, and operate temperature monitoring equipment according to the manufacturer's specifications.

(ii) For an oxidizer other than a catalytic oxidizer, install, operate, and maintain a temperature monitoring device equipped with a continuous recorder. The device must be capable of monitoring temperature with an accuracy of ±1 percent of the temperature being monitored in degrees Fahrenheit or ±1.8 degrees Fahrenheit, whichever is greater. The temperature sensor must be installed in the combustion chamber at a location in the combustion zone.

(iii) For a catalytic oxidizer, install, operate, and maintain a temperature monitoring device equipped with a continuous recorder. The device must be capable of monitoring temperature with an accuracy of ±1 percent of the temperature being monitored in degrees Fahrenheit or ±1.8 degrees Fahrenheit, whichever is greater. The temperature sensor must be installed in the vent stream at the nearest feasible point to the inlet and outlet of the catalyst bed. Calculate the temperature rise across the catalyst.

(iv) For temperature sensors, you must develop a quality control program that must contain, at a minimum, a written protocol that describes the procedures for verifying that the temperature sensor is operating properly using at least one of the methods in paragraph (e)(10)(iv)(A), (B), (C), (D), (E), or (F) of this section. The owner or operator shall keep these written procedures on record for the life of the affected source or until the affected source is no longer subject to the provisions of this part, to be made available for inspection, upon request, by the Administrator:

(A) Semiannually, compare measured readings to a National Institute of Standards and Technology (NIST) traceable temperature measurement device or simulate a typical operating temperature using a NIST traceable temperature simulation device. When the temperature measurement device method is used, the sensor of the calibrated device must be placed as close as practicable to the process sensor, and both devices must be subjected to the same environmental conditions. The accuracy of the temperature measured must be 2.5 percent of the temperature measured by the NIST traceable device or 5 degrees Fahrenheit whichever is greater.

(B) Annually validate the temperature sensor by following applicable mechanical and electrical validation procedures in the manufacturer owner's manual.

(C) Annually request the temperature sensor manufacturer to certify or recertify electromotive force (electrical properties) of the thermocouple.

(D) Annually replace the temperature sensor with a new certified temperature sensor in lieu of validation.

(E) Permanently install a redundant temperature sensor as close as practicable to the process temperature sensor. The sensors must yield a reading within 2.5 percent of each other for thermal oxidizers and catalytic oxidizers.

(F) Permanently install a temperature sensor with dual sensors to account for the possibility of failure.

(v) Conduct the validation checks in paragraph (e)(10)(iv)(A), (B), or (C) of this section any time the temperature sensor exceeds the manufacturer's

sfrattini on LAPJZKW1R2 with $$_JOB
VerDate Sep<11>2014 09:16 Apr 04, 2023 Jkt 256165 PO 00000 Frm 00644 Fmt 8010 Sfmt 8010 Q:\40\256165.XXX PC31

specified maximum operating temperature range or install a new temperature sensor.

(vi) At least quarterly, inspect temperature sensor components for proper connection and integrity or continuously operate an electronic monitoring system designed to notify personnel if the signal from the temperature sensor is interrupted.

(11) *Other types of control devices*. If you use a control device other than an oxidizer or wish to monitor an alternative parameter and comply with a different operating limit, you must apply to the Administrator for approval of an alternative monitoring method under § 63.8(f).

(f) *Capture system monitoring*. If you are complying with the emission standards in § 63.3320 through the use of a capture system and control device for one or more web coating lines, you must develop a site-specific monitoring plan containing the information specified in paragraphs (f)(1) and (2) of this section for these capture systems. You must monitor the capture system in accordance with paragraph (f)(3) of this section. You must make the monitoring plan available for inspection by the permitting authority upon request.

(1) The monitoring plan must:

(i) Identify the operating parameter to be monitored to ensure that the capture efficiency determined during the initial compliance test is maintained; and

(ii) Explain why this parameter is appropriate for demonstrating ongoing compliance; and

(iii) Identify the specific monitoring procedures.

(2) The monitoring plan must specify the operating parameter value or range of values that demonstrate compliance with the emission standards in § 63.3320. The specified operating parameter value or range of values must represent the conditions present when the capture system is being properly operated and maintained.

(3) You must conduct all capture system monitoring in accordance with the plan.

(4) Any deviation from the operating parameter value or range of values which are monitored according to the plan will be considered a deviation from the operating limit.

(5) You must review and update the capture system monitoring plan at least annually.

[67 FR 72341, Dec. 4, 2002, as amended at 85 FR 41297, July 9, 2020]

§ 63.3360 What performance tests must I conduct?

(a) The performance test methods you must conduct are as follows:

If you control organic HAP on any individual web coating line or any group of web coating lines to demonstrate compliance with the emission limits in § 63.3320 by:	You must:
(1) Limiting organic HAP or volatile matter content of coatings.	Determine the organic HAP or volatile matter and coating solids content of coating materials according to procedures in paragraphs (c) and (d) of this section. If applicable, determine the mass of volatile matter retained in the coated web or otherwise not emitted to the atmosphere according to paragraph (g) of this section.
(2) Using a capture and control system.	(i) Initially, conduct a performance test for each capture and control system to determine: The destruction or removal efficiency of each control device other than solvent recovery according to § 63.3360(e), and the capture efficiency of each capture system according to § 63.3360(f). If applicable, determine the mass of volatile matter retained in the coated web or otherwise not emitted to the atmosphere according to § 63.3360(g). (ii) Perform a periodic test once every 5 years for each thermal oxidizer to determine the destruction or removal efficiency according to § 63.3360(e). If applicable, determine the mass of volatile matter retained in the coated web or otherwise not emitted to the atmosphere according to § 63.3360(g). (iii) Either perform a periodic test once every 5 years for each catalytic oxidizer to determine the destruction or removal efficiency according to § 63.3360(e) OR perform a catalyst activity test annually on each catalytic oxidizer to ensure that the catalyst is performing properly according to § 63.3360(e)(3)(ii)(D)(1). If applicable, determine the mass of volatile matter retained in the coated web or otherwise not emitted to the atmosphere according to § 63.3360(g).

sfrattini on LAPJZKW1R2 with $$_JOB
VerDate Sep<11>2014 09:16 Apr 04, 2023 Jkt 256165 PO 00000 Frm 00645 Fmt 8010 Sfmt 8010 Q:\40\256165.XXX PC31

(b) *Control Device.* If you are using a control device to comply with the emission standards in § 63.3320, you are not required to conduct a performance test to demonstrate compliance if one or more of the criteria in paragraphs (b)(1) through (3) of this section are met.

(1) The control device is equipped with continuous emission monitoring systems (CEMS) for determining inlet and outlet total organic volatile matter concentration and meeting the requirements of Performance Specification 6, 8, or 9 in appendix B to 40 CFR part 60 and capture efficiency has been determined in accordance with the requirements of this subpart such that an overall organic HAP control efficiency can be calculated, and the CEMS are used to demonstrate continuous compliance in accordance with § 63.3350; or

(2) You have met the requirements of § 63.7(h) (for waiver of performance testing); or

(3) The control device is a solvent recovery system and you comply by means of a monthly liquid-liquid material balance.

(c) *Organic HAP content.* If you determine compliance with the emission standards in § 63.3320 by means other than determining the overall organic HAP control efficiency of a control device, you must determine the organic HAP mass fraction of each coating material ''as-purchased'' by following one of the procedures in paragraphs (c)(1) through (3) of this section, and determine the organic HAP mass fraction of each coating material ''as-applied'' by following the procedures in paragraph (c)(4) of this section. If the organic HAP content values are not determined using the procedures in paragraphs (c)(1) through (3) of this section, the owner or operator must submit an alternative test method for determining their values for approval by the Administrator in accordance with § 63.7(f). The recovery efficiency of the test method must be determined for all of the target organic HAP and a correction factor, if necessary, must be determined and applied.

(1) *Method 311.* You may test the coating material in accordance with Method 311 of appendix A of this part. The Method 311 determination may be performed by the manufacturer of the coating material and the results provided to the owner or operator. The organic HAP content must be calculated according to the criteria and procedures in paragraphs (c)(1)(i) through (iii) of this section.

(i) Include each organic HAP determined to be present at greater than or equal to 0.1 mass percent for Occupational Safety and Health Administration (OSHA)-defined carcinogens as specified in section A.6.4 of appendix A to 29 CFR 1910.1200 and greater than or equal to 1.0 mass percent for other organic HAP compounds.

(ii) Express the mass fraction of each organic HAP you include according to paragraph (c)(1)(i) of this section as a value truncated to four places after the decimal point (for example, 0.3791).

(iii) Calculate the total mass fraction of organic HAP in the tested material by summing the counted individual organic HAP mass fractions and truncating the result to three places after the decimal point (for example, 0.763).

(2) *Method 24.* For coatings, determine the volatile organic content as mass fraction of nonaqueous volatile matter and use it as a substitute for organic HAP using Method 24 of appendix A–7 to 40 CFR part 60. The Method 24 determination may be performed by the manufacturer of the coating and the results provided to you. One of the voluntary consensus standards in paragraphs (c)(2)(i) through (v) of this section may be used as an alternative to using Method 24.

(i) ASTM D1963–85 (Reapproved 1996), (incorporated by reference, see § 63.14);

(ii) ASTM D2111–10 (Reapproved 2015), (incorporated by reference, see § 63.14);

(iii) ASTM D2369–10 (Reapproved 2015)[e], (incorporated by reference, see § 63.14);

(iv) ASTM D2697–03 (Reapproved 2014), (incorporated by reference, see § 63.14); and

(v) ASTM D6093–97 (Reapproved 2016), (incorporated by reference, see § 63.14).

(3) *Formulation data.* You may use formulation data to determine the organic HAP mass fraction of a coating material. Formulation data may be provided to the owner or operator by the manufacturer of the material. In the event of an inconsistency between

sfrattini on LAPJZKW1R2 with $$_JOB
VerDate Sep<11>2014 09:16 Apr 04, 2023 Jkt 256165 PO 00000 Frm 00646 Fmt 8010 Sfmt 8010 Q:\40\256165.XXX PC31

Method 311 (appendix A to this part) test data and a facility's formulation data, and the Method 311 test value is higher, the Method 311 data will govern. Formulation data may be used provided that the information represents all organic HAP present at a level equal to or greater than 0.1 percent for OSHA-defined carcinogens as specified in section A.6.4 of appendix A to 29 CFR 1910.1200 and equal to or greater than 1.0 percent for other organic HAP compounds in any raw material used.

(4) *As-applied organic HAP mass fraction*. If the as-purchased coating material is applied to the web without any solvent or other material added, then the as-applied organic HAP mass fraction is equal to the as-purchased organic HAP mass fraction. Otherwise, the as-applied organic HAP mass fraction must be calculated using Equation 4 of § 63.3370.

(d) *Volatile organic and coating solids content*. If you determine compliance with the emission standards in § 63.3320 by means other than determining the overall organic HAP control efficiency of a control device and you choose to use the volatile organic content as a surrogate for the organic HAP content of coatings, you must determine the as-purchased volatile organic content and coating solids content of each coating material applied by following the procedures in paragraph (d)(1) or (2) of this section, and the as-applied volatile organic content and coating solids content of each coating material by following the procedures in paragraph (d)(3) of this section.

(1) *Method 24*. You may determine the volatile organic and coating solids mass fraction of each coating applied using Method 24 (appendix A–7 to 40 CFR part 60). The Method 24 determination may be performed by the manufacturer of the material and the results provided to you. When using volatile organic compound content as a surrogate for HAP, you may also use ASTM D3960–98, (incorporated by reference, see § 63.14) as an alternative to Method 24. If these values cannot be determined using either of these methods, you must submit an alternative technique for determining their values for approval by the Administrator.

(2) *Formulation data*. You may determine the volatile organic content and coating solids content of a coating material based on formulation data and may rely on volatile organic content data provided by the manufacturer of the material. In the event of any inconsistency between the formulation data and the results of Method 24 of appendix A–7 to 40 CFR part 60 and the Method 24 results are higher, the results of Method 24 will govern.

(3) *As-applied volatile organic content and coating solids content*. If the as-purchased coating material is applied to the web without any solvent or other material added, then the as-applied volatile organic content is equal to the as-purchased volatile content and the as-applied coating solids content is equal to the as-purchased coating solids content. Otherwise, the as-applied volatile organic content must be calculated using Equation 5 to § 63.3370(c)(4) and the as-applied coating solids content must be calculated using Equation 6 to § 63.3370(d).

(e) *Control device efficiency*. If you are using an add-on control device other than solvent recovery, such as an oxidizer, to comply with the emission standards in § 63.3320, you must conduct a performance test to establish the destruction or removal efficiency of the control device according to the methods and procedures in paragraphs (e)(1) and (2) of this section. During the performance test, you must establish the operating limits required by § 63.3321 according to paragraph (e)(3) of this section.

(1) *Initial performance test*. An initial performance test to establish the destruction or removal efficiency of the control device used to comply with the emission standards in § 63.3320 must be conducted such that control device inlet and outlet testing is conducted simultaneously, and the data are reduced in accordance with the test methods and procedures in paragraphs (e)(1)(i) through (ix) of this section. You must conduct three test runs as specified in § 63.7(e)(3), and each test run must last at least 1 hour.

(i) Method 1 or 1A of appendix A–1 to 40 CFR part 60 must be used for sample and velocity traverses to determine sampling locations.

sfrattini on LAPJZKW1R2 with $$_JOB
VerDate Sep<11>2014 09:16 Apr 04, 2023 Jkt 256165 PO 00000 Frm 00647 Fmt 8010 Sfmt 8010 Q:\40\256165.XXX PC31

(ii) Method 2, 2A, 2C, 2D, or 2F of appendix A–1 to 40 CFR part 60, or Method 2G of appendix A–2 to 40 CFR part 60 must be used to determine gas volumetric flow rate.

(iii) Method 3, 3A, or 3B of appendix A–2 to 40 CFR part 60 must be used for gas analysis to determine dry molecular weight. You may also use as an alternative to Method 3B the manual method for measuring the oxygen, carbon dioxide, and carbon monoxide content of exhaust gas in ANSI/ASME PTC 19.10–1981 Part 10, (incorporated by reference, see § 63.14).

(iv) Method 4 of appendix A–3 to 40 CFR part 60 must be used to determine stack gas moisture.

(v) Methods for determining the gas volumetric flow rate, dry molecular weight, and stack gas moisture must be performed, as applicable, during each test run.

(vi) Method 25 or 25A of appendix A–7 to 40 CFR part 60 must be used to determine total gaseous non-methane organic matter concentration. Use the same test method for both the inlet and outlet measurements which must be conducted simultaneously. You must submit notice of the intended test method to the Administrator for approval along with notification of the performance test required under § 63.7(b). You must use Method 25A if any of the conditions described in paragraphs (e)(1)(vi)(A) through (D) of this section apply to the control device.

(A) The control device is not an oxidizer.

(B) The control device is an oxidizer but an exhaust gas volatile organic matter concentration of 50 ppmv or less is required to comply with the emission standards in § 63.3320; or

(C) The control device is an oxidizer but the volatile organic matter concentration at the inlet to the control system and the required level of control are such that they result in exhaust gas volatile organic matter concentrations of 50 ppmv or less; or

(D) The control device is an oxidizer but because of the high efficiency of the control device the anticipated volatile organic matter concentration at the control device exhaust is 50 ppmv or less, regardless of inlet concentration.

(vii) Except as provided in § 63.7(e)(3), each performance test must consist of three separate runs with each run conducted for at least 1 hour under the conditions that exist when the affected source is operating under normal operating conditions. For the purpose of determining volatile organic compound concentrations and mass flow rates, the average of the results of all the runs will apply.

(viii) Volatile organic matter mass flow rates must be determined for each run specified in paragraph (e)(1)(vii) of this section using Equation 1:

$$M_f = Q_{sd} C_c [12][0.0416][10^{-6}]$$

Equation 1

Where:

M_f = Total organic volatile matter mass flow rate, kilograms (kg)/hour (h).

Q_{sd} = Volumetric flow rate of gases entering or exiting the control device, as determined according to paragraph (e)(1)(ii) of this section, dry standard cubic meters (dscm)/h.

C_c = Concentration of organic compounds as carbon, ppmv.

12.0 = Molecular weight of carbon.

0.0416 = Conversion factor for molar volume, kg-moles per cubic meter (mol/m^3) (@293 Kelvin (K) and 760 millimeters of mercury (mmHg)).

(ix) For each run, emission control device destruction or removal efficiency must be determined using Equation 2:

$$E = \frac{M_{fi} - M_{fo}}{M_{fi}} \times 100$$

Equation 2

sfrattini on LAPJZKW1R2 with $$_JOB
VerDate Sep<11>2014 09:16 Apr 04, 2023 Jkt 256165 PO 00000 Frm 00648 Fmt 8010 Sfmt 8006 Q:\40\256165.XXX PC31
ER09JY20.023</GPH> ER09JY20.000</GPH>

Where:

E = Organic volatile matter control efficiency of the control device, percent.

M_{fi} = Organic volatile matter mass flow rate at the inlet to the control device, kg/h.

M_{fo} = Organic volatile matter mass flow rate at the outlet of the control device, kg/h.

(x) The control device destruction or removal efficiency is determined as the average of the efficiencies determined in the test runs and calculated in Equation 2.

(2) *Process information*. You must record such process information as may be necessary to determine the conditions in existence at the time of the performance test. Representative conditions exclude periods of startup and shutdown. You may not conduct performance tests during periods of malfunction. You must record the process information that is necessary to document operating conditions during the test and include in such record an explanation to support that such conditions represent normal operation. Upon request, you shall make available to the Administrator such records as may be necessary to determine the conditions of performance tests.

(3) *Operating limits*. If you are using one or more add-on control device other than a solvent recovery system for which you conduct a liquid-liquid material balance to comply with the emission standards in § 63.3320, you must establish the applicable operating limits required by § 63.3321. These operating limits apply to each add-on emission control device, and you must establish the operating limits during the performance test required by paragraph (e) of this section according to the requirements in paragraphs (e)(3)(i) and (ii) of this section.

(i) Thermal oxidizer. If your add-on control device is a thermal oxidizer, establish the operating limits according to paragraphs (e)(3)(i)(A) and (B) of this section.

(A) During the performance test, you must monitor and record the combustion temperature at least once every 15 minutes during each of the three test runs. You must monitor the temperature in the firebox of the thermal oxidizer or immediately downstream of the firebox before any substantial heat exchange occurs.

(B) Use the data collected during the performance test to calculate and record the average combustion temperature maintained during the performance test. Maintain the 3-hour average combustion temperature no more than 50 degrees Fahrenheit lower than this average combustion temperature.

(ii) Catalytic oxidizer. If your add-on control device is a catalytic oxidizer, establish the operating limits according to paragraphs (e)(3)(ii)(A) and (B) or paragraphs (e)(3)(ii)(C) and (D) of this section.

(A) During the performance test, you must monitor and record the temperature just before the catalyst bed and the temperature difference across the catalyst bed at least once every 15 minutes during each of the three test runs.

(B) Use the data collected during the performance test to calculate and record the average temperature just before the catalyst bed and the average temperature difference across the catalyst bed maintained during the performance test. Maintain the 3-hour average combustion temperature no more than 50 degrees Fahrenheit lower than this average combustion temperature or maintain the 3-hour average temperature difference across the catalyst bed at no less than 80 percent of this average temperature differential, provided that the minimum temperature is always 50 degrees Fahrenheit above the catalyst's ignition temperature.

(C) As an alternative to monitoring the temperature difference across the catalyst bed, you may monitor the temperature at the inlet to the catalyst bed and implement a site-specific inspection and maintenance plan for your catalytic oxidizer as specified in paragraph (e)(3)(ii)(D) of this section. During the performance test, you must monitor and record the temperature just before the catalyst bed at least once every 15 minutes during each of the three test runs. Use the data collected during the performance test to calculate and record the average temperature just before the catalyst bed during the performance test. Maintain the 3-hour average combustion temperature no more than 50 degrees Fahrenheit lower than this average combustion temperature.

sfrattini on LAPJZKW1R2 with $$_JOB
VerDate Sep<11>2014 09:16 Apr 04, 2023 Jkt 256165 PO 00000 Frm 00649 Fmt 8010 Sfmt 8010 Q:\40\256165.XXX PC31

(D) You must develop and implement an inspection and maintenance plan for your catalytic oxidizer(s) for which you elect to monitor according to paragraph (e)(3)(ii)(C) of this section. The plan must address, at a minimum, the elements specified in paragraphs (e)(3)(ii)(D)(1) through (3) of this section.

(*1*) Annual sampling and analysis of the catalyst activity (*i.e.*, conversion efficiency) following the manufacturer's or catalyst supplier's recommended procedures,

(*2*) Monthly inspection of the oxidizer system including the burner assembly and fuel supply lines for problems, and

(*3*) Annual internal and monthly external visual inspection of the catalyst bed to check for channeling, abrasion, and settling. If problems are found, you must take corrective action consistent with the manufacturer's recommendations and conduct a new performance test to determine destruction efficiency in accordance with this section.

(4) *Control Destruction Efficiency Curve Development*. If you are using one or more add-on control devices other than a solvent recovery system for which you conduct a liquid-liquid material balance to comply with the emission standards in § 63.3320, you may establish a control destruction efficiency curve for use in estimating emissions that occur during deviations of the 3-hour operating parameters. This curve can be generated using test data or manufacturer's data that specifically documents the level of control at varying temperatures for your control device.

(f) *Capture efficiency*. If you demonstrate compliance by meeting the requirements of § 63.3370(f), (g), (h), (i), (j)(2), (l), (o)(2) or (3), or (q), you must determine capture efficiency using the procedures in paragraph (f)(1), (2), or (3) of this section, as applicable.

(1) You may assume your capture efficiency equals 100 percent if your capture system is a permanent total enclosure (PTE). You must confirm that your capture system is a PTE by demonstrating that it meets the requirements of section 6 of EPA Method 204 of 40 CFR part 51, appendix M, and that all exhaust gases from the enclosure are delivered to a control device.

(2) You may determine capture efficiency according to the protocols for testing with temporary total enclosures that are specified in Methods 204 and 204A through F of 40 CFR part 51, appendix M. You may exclude never-controlled work stations from such capture efficiency determinations.

(3) You may use any capture efficiency protocol and test methods that satisfy the criteria of either the Data Quality Objective or the Lower Confidence Limit approach as described in appendix A of subpart KK of this part. You may exclude never-controlled work stations from such capture efficiency determinations.

(g) *Volatile matter retained in the coated web or otherwise not emitted to the atmosphere*. You may choose to take into account the mass of volatile matter retained in the coated web after curing or drying or otherwise not emitted to the atmosphere when determining compliance with the emission standards in § 63.3320. If you choose this option, you must develop a site- and product-specific emission factor (EF) and determine the amount of volatile matter retained in the coated web or otherwise not emitted using Equation 3 to § 63.3360(g)(1). The EF must be developed by conducting a performance test using an approved EPA test method, or alternative approved by the Administrator by obtaining the average of a three-run test. You may additionally use manufacturer's emissions test data (as long as it replicates the facility's coating formulation and operating conditions), or a mass-balance type approach using a modified Method 24 (including ASTM D5403–93 for radiation-cureable coatings). The EF should equal the proportion of the mass of volatile organics emitted to the mass of volatile organics in the coating materials evaluated. You may use the EF in your compliance calculations only for periods that the work station(s) was (were) used to make the product, or a similar product, corresponding to that produced during the performance test. You must develop a separate EF for each group of different products that you choose to utilize an EF for calculating emissions by conducting a separate performance test for that group of products. You must conduct a

sfrattini on LAPJZKW1R2 with $$_JOB
VerDate Sep<11>2014 09:16 Apr 04, 2023 Jkt 256165 PO 00000 Frm 00650 Fmt 8010 Sfmt 8010 Q:\40\256165.XXX PC31

periodic performance test to re-establish the EF if there is a change in coating formulation, operating conditions, or other change that could reasonably be expected to increase emissions since the time of the last test that was used to establish the EF.

(1) Calculate the mass of volatile organics retained in the coated web or otherwise not emitted for the month from each group of similar products using Equation 3:

$$M_{vret} = \left(C_{vi}M_i + \sum_{j=1}^{q} C_{vij}M_{ij}\right) \times (1 - EF_i) \qquad \text{Equation 3}$$

Where:

M_{vret} = Mass of volatile matter retained in the coated web after curing or drying, or otherwise not emitted to the atmosphere, kg.

C_{vi} = Volatile organic content of coating material, i, expressed as a mass fraction, kg/kg.

M_i = Mass of as-purchased coating material, i, applied in a month, kg.

q = Number of different materials added to the coating material.

C_{vij} = Volatile organic content of material, j, added to as-purchased coating material, i, expressed as a mass fraction, kg/kg.

M_{ij} = Mass of material, j, added to as-purchased coating material, i, in a month, kg.

EF_i = Volatile organic matter site- and product-specific emission factor (three-run average determined from performance testing, evaluated as proportion of mass volatile organics emitted to mass of volatile organics in the coatings used during the performance test).

(2) [Reserved]

(h) *Control devices in series*. If you use multiple control devices in series to comply with the emission standards in § 63.3320, the performance test must include, at a minimum, the inlet to the first control device in the series, the outlet of the last control device in the series, and all intermediate streams (*e.g.*, gaseous exhaust to the atmosphere or a liquid stream from a recovery device) that are not subsequently treated by any of the control devices in the series.

[67 FR 72341, Dec. 4, 2002, as amended at 85 FR 41298, July 9, 2020]

REQUIREMENTS FOR SHOWING COMPLIANCE

§ 63.3370 How do I demonstrate compliance with the emission standards?

You must demonstrate compliance each month with the emission limitations in § 63.3320(b)(1) through (4). For each monthly demonstration, you may apply any combination of the emission limitations to each of your web coating lines individually, to each of one or more groupings of your lines (including a single grouping encompassing all lines of your affected source), or to any combination of individual and grouped lines, so long as each web coating line is included in the compliance demonstration for the month (*i.e.*, you are not required to apply the same emission limitation to each of the individual lines or groups of lines). You may change the emission limitation that you apply each month to your individual or grouped lines, and you may change line groupings for your monthly compliance demonstration.

(a) A summary of how you must demonstrate compliance follows:

If you choose to demonstrate compliance by:	Then you must demonstrate that:	To accomplish this:
(1) Use of "as-purchased" compliant coating materials.	(i) Each coating material used at an existing affected source does not exceed 0.04 kg organic HAP per kg coating material, and each coating material used at a new affected source does not exceed 0.016 kg organic HAP per kg coating material as-purchased; or.	Follow the procedures set out in § 63.3370(b).
	(ii) Each coating material used at an existing affected source does not exceed 0.2 kg organic HAP per kg coating solids, and each coating material used at a new affected source does not exceed 0.08 kg organic HAP per kg coating solids as-purchased.	Follow the procedures set out in § 63.3370(b).

sfrattini on LAPJZKW1R2 with $$_JOB
VerDate Sep<11>2014 09:16 Apr 04, 2023 Jkt 256165 PO 00000 Frm 00651 Fmt 8010 Sfmt 8010 Q:\40\256165.XXX PC31
ER09JY20.018</GPH>

If you choose to demonstrate compliance by:	Then you must demonstrate that:	To accomplish this:
(2) Use of ''as-applied'' compliant coating materials.	(i) Each coating material used at an existing affected source does not exceed 0.04 kg organic HAP per kg coating material, and each coating material used at a new affected source does not exceed 0.016 kg organic HAP per kg coating material as-applied; or.	Follow the procedures set out in § 63.3370(c)(1). Use either Equation 4 or 5 of § 63.3370 to determine compliance with § 63.3320(b)(2) in accordance with § 63.3370(c)(5)(i).
	(ii) Each coating material used at an existing affected source does not exceed 0.2 kg organic HAP per kg coating solids, and each coating material used at a new affected source does not exceed 0.08 kg organic HAP per kg coating solids as-applied; or.	Follow the procedures set out in § 63.3370(c)(2). Use Equations 6 and 7 of § 63.3370 to determine compliance with § 63.3320(b)(3) in accordance with § 63.3370(c)(5)(i).
	(iii) Monthly average of all coating materials used at an existing affected source does not exceed 0.04 kg organic HAP per kg coating material, and monthly average of all coating materials used at a new affected source does not exceed 0.016 kg organic HAP per kg coating material as-applied on a monthly average basis; or.	Follow the procedures set out in § 63.3370(c)(3). Use Equation 8 of § 63.3370 to determine compliance with § 63.3320(b)(2) in accordance with § 63.3370(c)(5)(ii).
	(iv) Monthly average of all coating materials used at an existing affected source does not exceed 0.2 kg organic HAP per kg coating solids, and monthly average of all coating materials used at a new affected source does not exceed 0.08 kg organic HAP per kg coating solids as-applied on a monthly average basis.	Follow the procedures set out in § 63.3370(c)(4). Use Equation 9 of § 63.3370 to determine compliance with § 63.3320(b)(3) in accordance with § 63.3370(c)(5)(ii).
(3) Tracking total monthly organic HAP applied.	Total monthly organic HAP applied does not exceed the calculated limit based on emission limitations.	Follow the procedures set out in § 63.3370(d). Show that total monthly HAP applied (Equation 10 of § 63.3370) is less than the calculated equivalent allowable organic HAP (Equation 17 or 18 of § 63.3370).
(4) Accounting for volatile matter retained in the coated web or otherwise not emitted.	A site- and product-specific emission factor was appropriately established for the group of products for which the site- and product-specific emission factor was used in the compliance calculations.	Follow the procedures set out in § 63.3360(g) and § 63.3370(e)
(5) Use of a capture system and control device.	(i) Overall organic HAP control efficiency is equal to 95 percent at an existing affected source and 98 percent at a new affected source on a monthly basis; or oxidizer outlet organic HAP concentration is no greater than 20 ppmv and capture efficiency is 100 percent; or operating parameters are continuously monitored; or.	Follow the procedures set out in § 63.3370(f) to determine compliance with § 63.3320(b)(1) according to § 63.3370(j) if using a solvent recovery device, or § 63.3370(k) if using a control device and CPMS, or § 63.3370(l) if using an oxidizer.
	(ii) Overall organic HAP emission rate does not exceed 0.2 kg organic HAP per kg coating solids for an existing affected source or 0.08 kg organic HAP per kg coating solids for a new affected source on a monthly average as-applied basis;.	Follow the procedures set out in § 63.3370(g) to determine compliance with § 63.3320(b)(3) according to § 63.3370(j) if using a solvent recovery device, or § 63.3370(l) if using an oxidizer.
	(iii) Overall organic HAP emission rate does not exceed 0.04 kg organic HAP per kg coating material for an existing affected source or 0.016 kg organic HAP per kg coating material for a new affected source on a monthly average as-applied basis; or.	Follow the procedures set out in § 63.3370(h) to determine compliance with § 63.3320(b)(2) according to § 63.3370(j) if using a solvent recovery device, or § 63.3370(l) if using an oxidizer.

sfrattini on LAPJZKW1R2 with $$_JOB
VerDate Sep<11>2014 09:16 Apr 04, 2023 Jkt 256165 PO 00000 Frm 00652 Fmt 8010 Sfmt 8010 Q:\40\256165.XXX PC31

If you choose to demonstrate compliance by:	Then you must demonstrate that:	To accomplish this:
	(iv) Overall organic HAP emission rate does not exceed the calculated limit based on emission limitations.	Follow the procedures set out in § 63.3370(i). Show that the monthly organic HAP emission rate is less than the calculated equivalent allowable organic HAP emission rate (Equation 17 or 18 of § 63.3370). Calculate the monthly organic HAP emission rate according to § 63.3370(j) if using a solvent recovery device, or § 63.3370(l) if using an oxidizer.
(6) Use of multiple capture and/or control devices.	(i) Overall organic HAP control efficiency is equal to 95 percent at an existing affected source and 98 percent at a new affected source on a monthly basis; or.	Follow the procedures set out in § 63.3370(f) to determine compliance with § 63.3320(b)(1) according to § 63.3370(f)(1) or (2).
	(ii) Average equivalent organic HAP emission rate does not exceed 0.2 kg organic HAP per kg coating solids for an existing affected source or 0.08 kg organic HAP per kg coating solids for a new affected source on a monthly average as-applied basis; or.	Follow the procedures set out in § 63.3370(g) to determine compliance with § 63.3320(b)(3) according to § 63.3370(o).
	(iii) Average equivalent organic HAP emission rate does not exceed 0.04 kg organic HAP per kg coating material for an existing affected source or 0.016 kg organic HAP per kg coating material for a new affected source on a monthly average as-applied basis; or.	Follow the procedures set out in § 63.3370(h) to determine compliance with § 63.3320(b)(2) according to § 63.3370(o).
	(iv) Average equivalent organic HAP emission rate does not exceed the calculated limit based on emission limitations.	Follow the procedures set out in § 63.3370(i). Show that the monthly organic HAP emission rate is less than the calculated equivalent allowable organic HAP emission rate (Equation 17 or 18 of § 63.3370) according to § 63.3370(o).
(7) Use of a combination of compliant coatings and control devices.	(i) Average equivalent organic HAP emission rate does not exceed 0.2 kg organic HAP per kg coating solids for an existing affected source or 0.08 kg organic HAP per kg coating solids for a new affected source on a monthly average as-applied basis; or.	Follow the procedures set out in § 63.3370(g) to determine compliance with § 63.3320(b)(3) according to § 63.3370(o).
	(ii) Average equivalent organic HAP emission rate does not exceed 0.04 kg organic HAP per kg coating material for an existing affected source or 0.016 kg organic HAP per kg coating material for a new affected source on a monthly average as-applied basis; or.	Follow the procedures set out in § 63.3370(h) to determine compliance with § 63.3320(b)(2) according to § 63.3370(o).
	(iii) Average equivalent organic HAP emission rate does not exceed the calculated limit based on emission limitations.	Follow the procedures set out in § 63.3370(i). Show that the monthly organic HAP emission rate is less than the calculated equivalent allowable organic HAP emission rate (Equation 17 or 18 of § 63.3370) according to § 63.3370(o).
(8) Use of non-HAP coatings ...	All coatings for all coating lines at an affected source have organic HAP contents below 0.1 percent by mass for OSHA-defined carcinogens as specified in section A.6.4 of appendix A to 29 CFR 1910.1200, and below 1.0 percent by mass for other organic HAP compounds.	Follow the procedures set out in § 63.3370(s).

(b) *As-purchased ''compliant'' coating materials.* (1) If you comply by using coating materials that individually meet the emission standards in § 63.3320(b)(2) or (3), you must demonstrate that each coating material applied during the month at an existing affected source contains no more than 0.04 mass fraction organic HAP or 0.2 kg organic HAP per kg coating solids, and that each coating material applied during the month at a new affected

sfrattini on LAPJZKW1R2 with $$_JOB
VerDate Sep<11>2014 09:16 Apr 04, 2023 Jkt 256165 PO 00000 Frm 00653 Fmt 8010 Sfmt 8010 Q:\40\256165.XXX PC31

source contains no more than 0.016 mass fraction organic HAP or 0.08 kg organic HAP per kg coating solids on an as-purchased basis as determined in accordance with § 63.3360(c).

(2) You are in compliance with emission standards in § 63.3320(b)(2) and (3) if each coating material applied at an existing affected source is applied as-purchased and contains no more than 0.04 kg organic HAP per kg coating material or 0.2 kg organic HAP per kg coating solids, and each coating material applied at a new affected source is applied as-purchased and contains no more than 0.016 kg organic HAP per kg coating material or 0.08 kg organic HAP per kg coating solids.

(c) *As-applied ''compliant'' coating materials.* If you comply by using coating materials that meet the emission standards in § 63.3320(b)(2) or (3) as-applied, you must demonstrate compliance by following one of the procedures in paragraphs (c)(1) through (4) of this section. Compliance is determined in accordance with paragraph (c)(5) of this section.

(1) *Each coating material as-applied meets the mass fraction of coating material standard (§ 63.3320(b)(2)).* You must demonstrate that each coating material applied at an existing affected source during the month contains no more than 0.04 kg organic HAP per kg coating material applied, and each coating material applied at a new affected source contains no more than 0.016 kg organic HAP per kg coating material applied as determined in accordance with paragraphs (c)(1)(i) and (ii) of this section. You must calculate the as-applied organic HAP content of as-purchased coating materials which are reduced, thinned, or diluted prior to application.

(i) Determine the organic HAP content or volatile organic content of each coating material applied on an as-purchased basis in accordance with § 63.3360(c).

(ii) Calculate the as-applied organic HAP content of each coating material using Equation 4:

$$C_{ahi} = \frac{\left(C_{hi}M_i + \sum_{j=1}^{q} C_{hij}M_{ij}\right)}{M_i + \sum_{j=1}^{q} M_{ij}}$$

Equation 4

Where:

C_{ahi} = Monthly average, as-applied, organic HAP content of coating material, i, expressed as a mass fraction, kg/kg.

C_{hi} = Organic HAP content of coating material, i, as-purchased, expressed as a mass fraction, kg/kg.

M_i = Mass of as-purchased coating material, i, applied in a month, kg.

q = number of different materials added to the coating material.

C_{hij} = Organic HAP content of material, j, added to as-purchased coating material, i, expressed as a mass fraction, kg/kg.

M_{ij} = Mass of material, j, added to as-purchased coating material, i, in a month, kg. or calculate the as-applied volatile organic content of each coating material using Equation 5:

$$C_{avi} = \frac{\left(C_{vi}M_i + \sum_{j=1}^{q} C_{vij}M_{ij}\right)}{M_i + \sum_{j=1}^{q} M_{ij}}$$

Equation 5

sfrattini on LAPJZKW1R2 with $$_JOB
VerDate Sep<11>2014 09:16 Apr 04, 2023 Jkt 256165 PO 00000 Frm 00654 Fmt 8010 Sfmt 8006 Q:\40\256165.XXX PC31
ER09JY20.001</GPH> ER09JY20.002</GPH>

Where:

C_{avi} = Monthly average, as-applied, volatile organic content of coating material, i, expressed as a mass fraction, kg/kg.

C_{vi} = Volatile organic content of coating material, i, expressed as a mass fraction, kg/kg.

M_i = Mass of as-purchased coating material, i, applied in a month, kg.

q = Number of different materials added to the coating material.

C_{vij} = Volatile organic content of material, j, added to as-purchased coating material, i, expressed as a mass fraction, kg/kg.

M_{ij} = Mass of material, j, added to as-purchased coating material, i, in a month, kg.

(2) *Each coating material as-applied meets the mass fraction of coating solids standard (§63.3320(b)(3))*. You must demonstrate that each coating material applied at an existing affected source contains no more than 0.20 kg of organic HAP per kg of coating solids applied and each coating material applied at a new affected source contains no more than 0.08 kg of organic HAP per kg of coating solids applied. You must demonstrate compliance in accordance with paragraphs (c)(2)(i) and (ii) of this section.

(i) Determine the as-applied coating solids content of each coating material following the procedure in §63.3360(d). You must calculate the as-applied coating solids content of coating materials which are reduced, thinned, or diluted prior to application, using Equation 6:

$$C_{asi} = \frac{\left(C_{si}M_i + \sum_{j=1}^{q} C_{sij}M_{ij}\right)}{M_i + \sum_{j=1}^{q} M_{ij}}$$

Equation 6

Where:

C_{si} = Coating solids content of coating material, i, expressed as a mass fraction, kg/kg.

M_i = Mass of as-purchased coating material, i, applied in a month, kg.

q = Number of different materials added to the coating material.

C_{sij} = Coating solids content of material, j, added to as-purchased coating material, i, expressed as a mass-fraction, kg/kg.

M_{ij} = Mass of material, j, added to as-purchased coating material, i, in a month, kg.

(ii) Calculate the as-applied organic HAP to coating solids ratio using Equation 7:

$$H_{si} = \frac{C_{ahi}}{C_{asi}}$$

Equation 7

Where:

H_{si} = As-applied, organic HAP to coating solids ratio of coating material, i.

C_{ahi} = Monthly average, as-applied, organic HAP content of coating material, i, expressed as a mass fraction, kg/kg.

C_{asi} = Monthly average, as-applied, coating solids content of coating material, i, expressed as a mass fraction, kg/kg.

(3) *Monthly average organic HAP content of all coating materials as-applied is less than the mass percent limit (§63.3320(b)(2))*. Demonstrate that the monthly average as-applied organic HAP content of all coating materials applied at an existing affected source is less than 0.04 kg organic HAP per kg of coating material applied, and all coating materials applied at a new affected source are less than 0.016 kg organic HAP per kg of coating material applied, as determined by Equation 8:

sfrattini on LAPJZKW1R2 with $$_JOB
VerDate Sep<11>2014 09:16 Apr 04, 2023 Jkt 256165 PO 00000 Frm 00655 Fmt 8010 Sfmt 8010 Q:\40\256165.XXX PC31
ER09JY20.003</GPH> ER09JY20.004</GPH>

$$H_L = \frac{\sum_{i=1}^{p} C_{hi} M_i + \sum_{j=1}^{q} C_{hij} M_{ij} - M_{vret}}{\sum_{i=1}^{p} M_i + \sum_{j=1}^{q} M_{ij}}$$

Equation 8

Where:

H_L = Monthly average, as-applied, organic HAP content of all coating materials applied, expressed as kg organic HAP per kg of coating material applied, kg/kg.

p = Number of different coating materials applied in a month.

C_{hi} = Organic HAP content of coating material, i, as-purchased, expressed as a mass fraction, kg/kg.

M_i = Mass of as-purchased coating material, i, applied in a month, kg.

q = Number of different materials added to the coating material.

C_{hij} = Organic HAP content of material, j, added to as-purchased coating material, i, expressed as a mass fraction, kg/kg.

M_{ij} = Mass of material, j, added to as-purchased coating material, i, in a month, kg.

M_{vret} = Mass of volatile matter retained in the coated web after curing or drying, or otherwise not emitted to the atmosphere, kg. The value of this term will be zero in all cases except where you choose to take into account the volatile matter retained in the coated web or otherwise not emitted to the atmosphere for the compliance demonstration procedures in § 63.3370.

(4) *Monthly average organic HAP content of all coating materials as-applied is less than the mass fraction of coating solids limit (§ 63.3320(b)(3))*. Demonstrate that the monthly average as-applied organic HAP content on the basis of coating solids applied of all coating materials applied at an existing affected source is less than 0.20 kg organic HAP per kg coating solids applied, and all coating materials applied at a new affected source are less than 0.08 kg organic HAP per kg coating solids applied, as determined by Equation 9:

$$H_S = \frac{\sum_{i=1}^{p} C_{hi} M_i + \sum_{j=1}^{q} C_{hij} M_{ij} - M_{vret}}{\sum_{i=1}^{p} C_{Si} M_i + \sum_{j=1}^{q} C_{Sij} M_{ij}}$$

Equation 9

Where:

H_s = Monthly average, as-applied, organic HAP to coating solids ratio, kg organic HAP/kg coating solids applied.

p = Number of different coating materials applied in a month.

C_{hi} = Organic HAP content of coating material, i, as-purchased, expressed as a mass fraction, kg/kg.

M_i = Mass of as-purchased coating material, i, applied in a month, kg.

q = Number of different materials added to the coating material.

C_{hij} = Organic HAP content of material, j, added to as-purchased coating material, i, expressed as a mass fraction, kg/kg.

M_{ij} = Mass of material, j, added to as-purchased coating material, i, in a month, kg.

M_{vret} = Mass of volatile matter retained in the coated web after curing or drying, or otherwise not emitted to the atmosphere, kg. The value of this term will be zero in all cases except where you choose to take into account the volatile matter retained in the coated web or otherwise not emitted to the atmosphere for the compliance demonstration procedures in § 63.3370.

C_{si} = Coating solids content of coating material, i, expressed as a mass fraction, kg/kg.

C_{sij} = Coating solids content of material, j, added to as-purchased coating material, i, expressed as a mass-fraction, kg/kg.

(5) The affected source is in compliance with emission standards in § 63.3320(b)(2) or (3) if:

sfrattini on LAPJZKW1R2 with $$_JOB
VerDate Sep<11>2014 09:16 Apr 04, 2023 Jkt 256165 PO 00000 Frm 00656 Fmt 8010 Sfmt 8010 Q:\40\256165.XXX PC31
ER09JY20.005-/GPH> ER09JY20.006-/GPH>

(i) The organic HAP content of each coating material as-applied at an existing affected source is no more than 0.04 kg organic HAP per kg coating material or 0.2 kg organic HAP per kg coating solids, and the organic HAP content of each coating material as-applied at a new affected source contains no more than 0.016 kg organic HAP per kg coating material or 0.08 kg organic HAP per kg coating solids; or

(ii) The monthly average organic HAP content of all as-applied coating materials at an existing affected source are no more than 0.04 kg organic HAP per kg coating material or 0.2 kg organic HAP per kg coating solids, and the monthly average organic HAP content of all as-applied coating materials at a new affected source is no more than 0.016 kg organic HAP per kg coating material or 0.08 kg organic HAP per kg coating solids.

(d) *Monthly allowable organic HAP applied.* Demonstrate that the total monthly organic HAP applied as determined by Equation 10 is less than the calculated equivalent allowable organic HAP as determined by Equation 17 or 18 in paragraph (m) of this section:

$$H_m = \sum_{i=1}^{p} C_{hi} M_i + \sum_{j=1}^{q} C_{hij} M_{ij} - M_{vret}$$

Equation 10

Where:

H_m = Total monthly organic HAP applied, kg.

p = Number of different coating materials applied in a month.

C_{hi} = Organic HAP content of coating material, i, as-purchased, expressed as a mass fraction, kg/kg.

M_i = Mass of as-purchased coating material, i, applied in a month, kg.

q = Number of different materials added to the coating material.

C_{hij} = Organic HAP content of material, j, added to as-purchased coating material, i, expressed as a mass fraction, kg/kg.

M_{ij} = Mass of material, j, added to as-purchased coating material, i, in a month, kg.

M_{vret} = Mass of volatile matter retained in the coated web after curing or drying, or otherwise not emitted to the atmosphere, kg. The value of this term will be zero in all cases except where you choose to take into account the volatile matter retained in the coated web or otherwise not emitted to the atmosphere for the compliance demonstration procedures in §63.3370.

(e) *Accounting for volatile matter retained in the coated web or otherwise not emitted.* If you choose to use the equation in §63.3360(g) to take into account volatile organic matter that is retained in the coated web or otherwise not emitted, you must identify each group of similar products that can utilize each site- and product-specific emission factor. Details regarding the test methods and calculations are provided in §63.3360(g).

(f) *Capture and control to reduce emissions to no more than allowable limit (§63.3320(b)(1)).* Operate a capture system and control device and demonstrate an overall organic HAP control efficiency of at least 95 percent at an existing affected source and at least 98 percent at a new affected source for each month, or operate a capture system and oxidizer so that an outlet organic HAP concentration of no greater than 20 ppmv on a dry basis is achieved as long as the capture efficiency is 100 percent as detailed in §63.3320(b)(4). Unless one of the cases described in paragraph (f)(1), (2), or (3) of this section applies to the affected source, you must either demonstrate compliance in accordance with the procedure in paragraph (i) of this section when emissions from the affected source are controlled by a solvent recovery device, or the procedure in paragraph (l) of this section when emissions are controlled by an oxidizer or demonstrate compliance for a web coating line by operating each capture system and each control device and continuous parameter monitoring according to the procedures in paragraph (k) of this section.

(1) If the affected source has only always-controlled work stations and operates more than one capture system

sfrattini on LAPJZKW1R2 with $$_JOB
VerDate Sep<11>2014 09:16 Apr 04, 2023 Jkt 256165 PO 00000 Frm 00657 Fmt 8010 Sfmt 8010 Q:\40\256165.XXX PC31
ER09JY20.007</GPH>

or more than one control device, you must demonstrate compliance in accordance with the provisions of either paragraph (o) or (q) of this section.

(2) If the affected source operates one or more never-controlled work stations or one or more intermittently-controlled work stations, you must demonstrate compliance in accordance with the provisions of paragraph (o) of this section.

(3) An alternative method of demonstrating compliance with § 63.3320(b)(1) is the installation of a PTE around the web coating line that achieves 100 percent capture efficiency and ventilation of all organic HAP emissions from the total enclosure to an oxidizer with an outlet organic HAP concentration of no greater than 20 ppmv on a dry basis. If this method is selected, you must demonstrate compliance by following the procedures in paragraphs (f)(3)(i) and (ii) of this section. Compliance is determined according to paragraph (f)(3)(iii) of this section.

(i) Demonstrate that a total enclosure is installed. An enclosure that meets the requirements in § 63.3360(f)(1) will be considered a total enclosure.

(ii) Determine the organic HAP concentration at the outlet of your total enclosure using the procedures in paragraph (f)(3)(ii)(A) or (B) of this section.

(A) Determine the control device efficiency using Equation 2 of § 63.3360 and the applicable test methods and procedures specified in § 63.3360(e).

(B) Use a CEMS to determine the organic HAP emission rate according to paragraphs (j)(2)(i) through (x) of this section.

(iii) You are in compliance if the installation of a total enclosure is demonstrated and the organic HAP concentration at the outlet of the incinerator is demonstrated to be no greater than 20 ppmv on a dry basis.

(g) *Capture and control to achieve mass fraction of coating solids applied limit (§ 63.3320(b)(3)).* Operate a capture system and control device and limit the organic HAP emission rate from an existing affected source to no more than 0.20 kg organic HAP emitted per kg coating solids applied, and from a new affected source to no more than 0.08 kg organic HAP emitted per kg coating solids applied as determined on a monthly average as-applied basis. If the affected source operates more than one capture system, more than one control device, one or more never-controlled work stations, or one or more intermittently-controlled work stations, then you must demonstrate compliance in accordance with the provisions of paragraph (o) of this section. Otherwise, you must demonstrate compliance following the procedure in paragraph (j) of this section when emissions from the affected source are controlled by a solvent recovery device or the procedure in paragraph (l) of this section when emissions are controlled by an oxidizer.

(h) *Capture and control to achieve mass fraction limit (§ 63.3320(b)(2)).* Operate a capture system and control device and limit the organic HAP emission rate to no more than 0.04 kg organic HAP emitted per kg coating material applied at an existing affected source, and no more than 0.016 kg organic HAP emitted per kg coating material applied at a new affected source as determined on a monthly average as-applied basis. If the affected source operates more than one capture system, more than one control device, one or more never-controlled work stations, or one or more intermittently-controlled work stations, then you must demonstrate compliance in accordance with the provisions of paragraph (o) of this section. Otherwise, you must demonstrate compliance following the procedure in paragraph (j) of this section when emissions from the affected source are controlled by a solvent recovery device or the procedure in paragraph (l) of this section when emissions are controlled by an oxidizer.

(i) *Capture and control to achieve allowable emission rate.* Operate a capture system and control device and limit the monthly organic HAP emissions to less than the allowable emissions as calculated in accordance with paragraph (m) of this section. If the affected source operates more than one capture system, more than one control device, one or more never-controlled work stations, or one or more intermittently-controlled work stations, then you must demonstrate compliance in

sfrattini on LAPJZKW1R2 with $$_JOB
VerDate Sep<11>2014 09:16 Apr 04, 2023 Jkt 256165 PO 00000 Frm 00658 Fmt 8010 Sfmt 8010 Q:\40\256165.XXX PC31

accordance with the provisions of paragraph (o) of this section. Otherwise, the owner or operator must demonstrate compliance following the procedure in paragraph (j) of this section when emissions from the affected source are controlled by a solvent recovery device or the procedure in paragraph (l) of this section when emissions are controlled by an oxidizer.

(j) *Solvent recovery device compliance demonstration*. If you use a solvent recovery device to control emissions, you must show compliance by following the procedures in either paragraph (j)(1) or (2) of this section:

(1) *Liquid-liquid material balance*. Perform a monthly liquid-liquid material balance as specified in paragraphs (j)(1)(i) through (v) of this section and use the applicable equations in paragraphs (j)(1)(vi) through (ix) of this section to convert the data to units of the selected compliance option in paragraphs (f) through (i) of this section. Compliance is determined in accordance with paragraph (j)(1)(x) of this section.

(i) Determine the mass of each coating material applied on the web coating line or group of web coating lines controlled by a common solvent recovery device during the month.

(ii) If demonstrating compliance on the basis of organic HAP emission rate based on coating solids applied, organic HAP emission rate based on coating material applied, or emission of less than the calculated allowable organic HAP, determine the organic HAP content of each coating material as-applied during the month following the procedure in § 63.3360(c).

(iii) Determine the volatile organic content of each coating material as-applied during the month following the procedure in § 63.3360(d).

(iv) If demonstrating compliance on the basis of organic HAP emission rate based on coating solids applied or emission of less than the calculated allowable organic HAP, determine the coating solids content of each coating material applied during the month following the procedure in § 63.3360(d).

(v) Determine and monitor the amount of volatile organic matter recovered for the month according to the procedures in § 63.3350(d).

(vi) *Recovery efficiency*. Calculate the volatile organic matter collection and recovery efficiency using Equation 11:

$$R_v = \frac{M_{vr} + M_{vret}}{\sum_{i=1}^{p} C_{vi} M_i + \sum_{i=1}^{q} C_{vij} M_{ij}} \times 100$$

Equation 11

Where:

R_v = Organic volatile matter collection and recovery efficiency, percent.

M_{vr} = Mass of volatile matter recovered in a month, kg.

M_{vret} = Mass of volatile matter retained in the coated web after curing or drying, or otherwise not emitted to the atmosphere, kg. The value of this term will be zero in all cases except where you choose to take into account the volatile matter retained in the coated web or otherwise not emitted to the atmosphere for the compliance demonstration procedures in this section.

p = Number of different coating materials applied in a month.

C_{vi} = Volatile organic content of coating material, i, expressed as a mass fraction, kg/kg.

M_i = Mass of as-purchased coating material, i, applied in a month, kg.

q = Number of different materials added to the coating material.

C_{vij} = Volatile organic content of material, j, added to as-purchased coating material, i, expressed as a mass fraction, kg/kg.

M_{ij} = Mass of material, j, added to as-purchased coating material, i, in a month, kg.

(vii) *Organic HAP emitted*. Calculate the organic HAP emitted during the month using Equation 12:

sfrattini on LAPJZKW1R2 with $$_JOB
VerDate Sep<11>2014 09:16 Apr 04, 2023 Jkt 256165 PO 00000 Frm 00659 Fmt 8010 Sfmt 8010 Q:\40\256165.XXX PC31
ER09JY20.008

$$H_e = \left[1 - \frac{R_v}{100}\right]\left[\sum_{i=1}^{p} C_{hi} M_i + \sum_{j=1}^{q} C_{hij} M_{ij} - M_{vret}\right]$$

Equation 12

Where:

H_e = Total monthly organic HAP emitted, kg.

R_v = Organic volatile matter collection and recovery efficiency, percent.

p = Number of different coating materials applied in a month.

C_{hi} = Organic HAP content of coating material, i, as-purchased, expressed as a mass fraction, kg/kg.

M_i = Mass of as-purchased coating material, i, applied in a month, kg.

q = Number of different materials added to the coating material.

C_{hij} = Organic HAP content of material, j, added to as-purchased coating material, i, expressed as a mass fraction, kg/kg.

M_{ij} = Mass of material, j, added to as-purchased coating material, i, in a month, kg.

M_{vret} = Mass of volatile matter retained in the coated web after curing or drying, or otherwise not emitted to the atmosphere, kg. The value of this term will be zero in all cases except where you choose to take into account the volatile matter retained in the coated web or otherwise not emitted to the atmosphere for the compliance demonstration procedures in this section.

(viii) *Organic HAP emission rate based on coating solids applied.* Calculate the organic HAP emission rate based on coating solids applied using Equation 13:

$$L = \frac{H_e}{\sum_{i=1}^{p} C_{si} M_i + \sum_{j=1}^{q} C_{sij} M_{ij}}$$

Equation 13

Where:

L = Mass organic HAP emitted per mass of coating solids applied, kg/kg.

H_e = Total monthly organic HAP emitted, kg.

p = Number of different coating materials applied in a month.

C_{si} = Coating solids content of coating material, i, expressed as a mass fraction, kg/kg.

M_i = Mass of as-purchased coating material, i, applied in a month, kg.

q = Number of different materials added to the coating material.

C_{sij} = Coating solids content of material, j, added to as-purchased coating material, i, expressed as a mass-fraction, kg/kg.

M_{ij} = Mass of material, j, added to as-purchased coating material, i, in a month, kg.

(ix) *Organic HAP emission rate based on coating materials applied.* Calculate the organic HAP emission rate based on coating material applied using Equation 14:

$$S = \frac{H_e}{\sum_{i=1}^{p} M_i + \sum_{j=1}^{q} M_{ij}}$$

Equation 14

Where:

S = Mass organic HAP emitted per mass of material applied, kg/kg.

H_e = Total monthly organic HAP emitted, kg.

p = Number of different coating materials applied in a month.

M_i = Mass of as-purchased coating material, i, applied in a month, kg.

q = Number of different materials added to the coating material.

sfrattini on LAPJZKW1R2 with $$_JOB
VerDate Sep<11>2014 09:16 Apr 04, 2023 Jkt 256165 PO 00000 Frm 00660 Fmt 8010 Sfmt 8010 Q:\40\256165.XXX PC31
ER09JY20.009</GPH> ER09JY20.010</GPH> ER09JY20.011</GPH>

M_{ij} = Mass of material, j, added to as-purchased coating material, i, in a month, kg.

(x) You are in compliance with the emission standards in §63.3320(b) if:

(A) The volatile organic matter collection and recovery efficiency is 95 percent or greater at an existing affected source and 98 percent or greater at a new affected source; or

(B) The organic HAP emission rate based on coating solids applied is no more than 0.20 kg organic HAP per kg coating solids applied at an existing affected source and no more than 0.08 kg organic HAP per kg coating solids applied at a new affected source; or

(C) The organic HAP emission rate based on coating material applied is no more than 0.04 kg organic HAP per kg coating material applied at an existing affected source and no more than 0.016 kg organic HAP per kg coating material applied at a new affected source; or

(D) The organic HAP emitted during the month is less than the calculated allowable organic HAP as determined using paragraph (m) of this section.

(2) *Continuous emission monitoring of capture system and control device performance*. Demonstrate initial compliance through a performance test on capture efficiency and continuing compliance through continuous emission monitors and continuous monitoring of capture system operating parameters following the procedures in paragraphs (j)(2)(i) through (vii) of this section. Use the applicable equations specified in paragraphs (j)(2)(viii) through (x) of this section to convert the monitoring and other data into units of the selected compliance option in paragraphs (f) through (i) of this section. Compliance is determined in accordance with paragraph (j)(2)(xi) of this section.

(i) *Control device efficiency*. Continuously monitor the gas stream entering and exiting the control device to determine the total organic volatile matter mass flow rate (*e.g.*, by determining the concentration of the vent gas in grams per cubic meter and the volumetric flow rate in cubic meters per second such that the total organic volatile matter mass flow rate in grams per second can be calculated) such that the control device efficiency of the control device can be calculated for each month using Equation 2 of §63.3360.

(ii) *Capture efficiency monitoring*. Whenever a web coating line is operated, continuously monitor the operating parameters established in accordance with §63.3350(f) to ensure capture efficiency.

(iii) Determine the percent capture efficiency in accordance with §63.3360(f).

(iv) *Control efficiency*. Calculate the overall organic HAP control efficiency achieved for each month using Equation 15:

$$R = \frac{(E)(CE)}{100}$$

Equation 15

Where:

R = Overall organic HAP control efficiency, percent.

E = Organic volatile matter control efficiency of the control device, percent.

CE = Organic volatile matter capture efficiency of the capture system, percent.

(v) If demonstrating compliance on the basis of organic HAP emission rate based on coating solids applied, organic HAP emission rate based on coating materials applied, or emission of less than the calculated allowable organic HAP, determine the mass of each coating material applied on the web coating line or group of web coating lines controlled by a common control device during the month.

(vi) If demonstrating compliance on the basis of organic HAP emission rate based on coating solids applied, organic HAP emission rate based on coating material applied, or emission of less than the calculated allowable organic HAP, determine the organic HAP content of each coating material as-applied during the month following the procedure in §63.3360(c).

(vii) If demonstrating compliance on the basis of organic HAP emission rate

sfrattini on LAPJZKW1R2 with $$_JOB
VerDate Sep<11>2014 09:16 Apr 04, 2023 Jkt 256165 PO 00000 Frm 00661 Fmt 8010 Sfmt 8010 Q:\40\256165.XXX PC31
ER09JY20.012</GPH>

based on coating solids applied or emission of less than the calculated allowable organic HAP, determine the coating solids content of each coating material as-applied during the month following the procedure in § 63.3360(d).

(viii) *Organic HAP emitted.* Calculate the organic HAP emitted during the month for each month using Equation 16:

$$H_e = (1-R)\left(\sum_{i=1}^{p} C_{ahi} M_i\right) - M_{vret}$$

Equation 16

Where:

H_e = Total monthly organic HAP emitted, kg.

R = Overall organic HAP control efficiency, percent.

p = Number of different coating materials applied in a month.

C_{ahi} = Monthly average, as-applied, organic HAP content of coating material, i, expressed as a mass fraction, kg/kg.

M_i = Mass of as-purchased coating material, i, applied in a month, kg.

M_{vret} = Mass of volatile matter retained in the coated web after curing or drying, or otherwise not emitted to the atmosphere, kg. The value of this term will be zero in all cases except where you choose to take into account the volatile matter retained in the coated web or otherwise not emitted to the atmosphere for the compliance demonstration procedures in this section.

(ix) *Organic HAP emission rate based on coating solids applied.* Calculate the organic HAP emission rate based on coating solids applied using Equation 13 of this section.

(x) *Organic HAP emission rate based on coating materials applied.* Calculate the organic HAP emission rate based on coating material applied using Equation 14 of this section.

(xi) *Compare actual performance to the performance required by compliance option.* The affected source is in compliance with the emission standards in § 63.3320(b) for each month if the capture system is operated such that the average capture system operating parameter is greater than or less than (as appropriate) the operating parameter value established in accordance with § 63.3350(f); and

(A) The organic volatile matter collection and recovery efficiency is 95 percent or greater at an existing affected source and 98 percent or greater at a new affected source; or

(B) The organic HAP emission rate based on coating solids applied is no more than 0.20 kg organic HAP per kg coating solids applied at an existing affected source and no more than 0.08 kg organic HAP per kg coating solids applied at a new affected source; or

(C) The organic HAP emission rate based on coating material applied is no more than 0.04 kg organic HAP per kg coating material applied at an existing affected source and no more than 0.016 kg organic HAP per kg coating material applied at a new affected source; or

(D) The organic HAP emitted during the month is less than the calculated allowable organic HAP as determined using paragraph (m) of this section.

(k) *Capture and control system compliance demonstration procedures using a CPMS.* If you use an add-on control device, you must demonstrate initial compliance for each capture system and each control device through performance tests and demonstrate continuing compliance through continuous monitoring of capture system and control device operating parameters as specified in paragraphs (k)(1) through (3) of this section. Compliance is determined in accordance with paragraph (k)(4) or (k)(5) of this section.

(1) Determine the control device destruction or removal efficiency using the applicable test methods and procedures in § 63.3360(e).

(2) Determine the emission capture efficiency in accordance with § 63.3360(f).

(3) Whenever a web coating line is operated, continuously monitor the operating parameters established according to § 63.3350(e) and (f).

sfrattini on LAPJZKW1R2 with $$_JOB
VerDate Sep<11>2014 09:16 Apr 04, 2023 Jkt 256165 PO 00000 Frm 00662 Fmt 8010 Sfmt 8010 Q:\40\256165.XXX PC31
ER09JY20.013</GPH>

(4) *No operating limit deviations.* You are in compliance with the emission standards in §63.3320(b) if the thermal oxidizer is operated such that the average combustion temperature does not fall more than 50 degrees Fahrenheit below the temperature established in accordance with §63.3360(e)(3)(i) for each 3-hour period or if the catalytic oxidizer is operating such that the three-hour average temperature difference across the bed does not fall more than 80 percent of the average temperature established in accordance with §63.3360(e)(3)(ii) and the minimum temperature is always 50 degrees Fahrenheit above the catalyst's ignition temperature, or the catalytic oxidizer average combustion temperature does not fall more than 50 °F below the temperature established in accordance with §63.3360(e)(3)(ii) for each 3-hour period, and the capture system operating parameter is operated at an average value greater than or less than (as appropriate) the operating parameter value established in accordance with §63.3350(f); and

(i) The overall organic HAP control efficiency is 95 percent or greater at an existing affected source and 98 percent or greater at a new affected source; or

(ii) The organic HAP emission rate based on coating solids applied is no more than 0.20 kg organic HAP per kg coating solids applied at an existing affected source and no more than 0.08 kg organic HAP per kg coating solids applied at a new affected source; or

(iii) The organic HAP emission rate based on coating material applied is no more than 0.04 kg organic HAP per kg coating material applied at an existing affected source and no more than 0.016 kg organic HAP per kg coating material applied at a new affected source; or

(iv) The organic HAP emitted during the month is less than the calculated allowable organic HAP as determined using paragraph (m) of this section.

(5) *Operating limit deviations.* If one or more operating limit deviations occurred during the monthly averaging period, compliance with the emission standards in §63.3320(b) is determined by either assuming no control of emissions or by estimating the emissions using a control destruction efficiency curve during each 3-hour period that was a deviation. You are in compliance with the emission standards in §63.3320(b) if, including the periods of deviations:

(i) The overall organic HAP control efficiency is 95 percent or greater at an existing affected source and 98 percent or greater at a new affected source; or

(ii) The organic HAP emission rate based on coating solids applied is no more than 0.20 kg organic HAP per kg coating solids applied at an existing affected source and no more than 0.08 kg organic HAP per kg coating solids applied at a new affected source; or

(iii) The organic HAP emission rate based on coating material applied is no more than 0.04 kg organic HAP per kg coating material applied at an existing affected source and no more than 0.016 kg organic HAP per kg coating material applied at a new affected source; or

(iv) The organic HAP emitted during the month is less than the calculated allowable organic HAP as determined using paragraph (m) of this section.

(l) *Oxidizer compliance demonstration procedures.* If you use an oxidizer to control emissions to comply with this subpart, you must show compliance by following the procedures in paragraph (l)(1) of this section. Use the applicable equations specified in paragraph (l)(2) of this section to convert the monitoring and other data into units of the selected compliance option in paragraph (f) through (i) of this section. Compliance is determined in accordance with paragraph (l)(3) or (l)(4) of this section.

(1) Demonstrate initial compliance through performance tests of capture efficiency and control device efficiency and continuing compliance through continuous monitoring of capture system and control device operating parameters as specified in paragraphs (l)(1)(i) through (vi) of this section:

(i) Determine the oxidizer destruction efficiency using the procedure in §63.3360(e).

(ii) Determine the capture system capture efficiency in accordance with §63.3360(f).

(iii) *Capture and control efficiency monitoring.* Whenever a web coating line is operated, continuously monitor the operating parameters established

sfrattini on LAPJZKW1R2 with $$_JOB
VerDate Sep<11>2014 09:16 Apr 04, 2023 Jkt 256165 PO 00000 Frm 00663 Fmt 8010 Sfmt 8010 Q:\40\256165.XXX PC31

in accordance with § 63.3350(e) and (f) to ensure capture and control efficiency.

(iv) If demonstrating compliance on the basis of organic HAP emission rate based on coating solids applied, organic HAP emission rate based on coating materials applied, or emission of less than the calculated allowable organic HAP, determine the mass of each coating material applied on the web coating line or group of web coating lines controlled by a common oxidizer during the month.

(v) If demonstrating compliance on the basis of organic HAP emission rate based on coating solids applied, organic HAP emission rate based on coating material applied, or emission of less than the calculated allowable organic HAP, determine the organic HAP content of each coating material as-applied during the month following the procedure in § 63.3360(c).

(vi) If demonstrating compliance on the basis of organic HAP emission rate based on coating solids applied or emission of less than the calculated allowable organic HAP, determine the coating solids content of each coating material applied during the month following the procedure in § 63.3360(d).

(2) Convert the information obtained under paragraph (q)(1) of this section into the units of the selected compliance option using the calculation procedures specified in paragraphs (l)(2)(i) through (iv) of this section.

(i) *Control efficiency*. Calculate the overall organic HAP control efficiency achieved using Equation 15.

(ii) *Organic HAP emitted*. Calculate the organic HAP emitted during the month using Equation 16.

(iii) *Organic HAP emission rate based on coating solids applied*. Calculate the organic HAP emission rate based on coating solids applied for each month using Equation 13.

(iv) *Organic HAP emission rate based on coating materials applied*. Calculate the organic HAP emission rate based on coating material applied using Equation 14.

(3) *No operating limit deviations*. You are in compliance with the emission standards in § 63.3320(b) if the oxidizer is operated such that the average combustion temperature does not fall more than 50 degrees Fahrenheit below the temperature established in accordance with § 63.3360(e)(3)(i) for each 3-hour period, or the catalytic oxidizer average combustion temperature does not fall more than 50 degrees Fahrenheit below the temperature established in accordance with § 63.3360(e)(3)(ii) for each 3-hour period or the temperature difference across the bed does not fall more than 80 percent of the average temperature established in accordance with § 63.3360(e)(3)(ii) and the minimum temperature is always 50 degrees Fahrenheit above the catalyst's ignition temperature, and the capture system operating parameter is operated at an average value greater than or less than (as appropriate) the operating parameter value established in accordance with § 63.3350(f); and

(i) The overall organic HAP control efficiency is 95 percent or greater at an existing affected source and 98 percent or greater at a new affected source; or

(ii) The organic HAP emission rate based on coating solids applied is no more than 0.20 kg organic HAP per kg coating solids applied at an existing affected source and no more than 0.08 kg organic HAP per kg coating solids applied at a new affected source; or

(iii) The organic HAP emission rate based on coating material applied is no more than 0.04 kg organic HAP per kg coating material applied at an existing affected source and no more than 0.016 kg organic HAP per kg coating material applied at a new affected source; or

(iv) The organic HAP emitted during the month is less than the calculated allowable organic HAP as determined using paragraph (m) of this section.

(4) *Operating limit deviations*. If one or more operating limit deviations occurred during the monthly averaging period, compliance with the emission standards in § 63.3320(b) is determined by assuming no control of emissions or by estimating the emissions using a control destruction efficiency curve during each 3-hour period that was a deviation. You are in compliance with the emission standards in § 63.3320(b) if, including the periods of deviation:

(i) The overall organic HAP control efficiency is 95 percent or greater at an existing affected source and 98 percent or greater at a new affected source; or

sfrattini on LAPJZKW1R2 with $$_JOB
VerDate Sep<11>2014 09:16 Apr 04, 2023 Jkt 256165 PO 00000 Frm 00664 Fmt 8010 Sfmt 8010 Q:\40\256165.XXX PC31

(ii) The organic HAP emission rate based on coating solids applied is no more than 0.20 kg organic HAP per kg coating solids applied at an existing affected source and no more than 0.08 kg organic HAP per kg coating solids applied at a new affected source; or

(iii) The organic HAP emission rate based on coating material applied is no more than 0.04 kg organic HAP per kg coating material applied at an existing affected source and no more than 0.016 kg organic HAP per kg coating material applied at a new affected source; or

(iv) The organic HAP emitted during the month is less than the calculated allowable organic HAP as determined using paragraph (m) of this section.

(m) *Monthly allowable organic HAP emissions.* This paragraph provides the procedures and calculations for determining monthly allowable organic HAP emissions for use in demonstrating compliance in accordance with paragraph (d), (i), (j)(1)(x)(D), (j)(2)(xi)(D), or (l)(3)(iv) of this section. You will need to determine the amount of coating material applied at greater than or equal to 20 mass percent coating solids and the amount of coating material applied at less than 20 mass percent coating solids. The allowable organic HAP limit is then calculated based on coating material applied at greater than or equal to 20 mass percent coating solids complying with 0.2 kg organic HAP per kg coating solids at an existing affected source or 0.08 kg organic HAP per kg coating solids at a new affected source, and coating material applied at less than 20 mass percent coating solids complying with 4 mass percent organic HAP at an existing affected source and 1.6 mass-percent organic HAP at a new affected source as follows:

(1) Determine the as-purchased mass of each coating material applied each month.

(2) Determine the as-purchased coating solids content of each coating material applied each month in accordance with §63.3360(d)(1).

(3) Determine the as-purchased mass fraction of each coating material which was applied at 20 mass percent or greater coating solids content on an as-applied basis.

(4) Determine the total mass of each solvent, diluent, thinner, or reducer added to coating materials which were applied at less than 20 mass percent coating solids content on an as-applied basis each month.

(5) Calculate the monthly allowable organic HAP emissions using Equation 17 for an existing affected source:

$$H_a = 0.20\left[\sum_{i=1}^{p} M_i G_i C_{si}\right] + 0.04\left[\sum_{i=1}^{p} M_i(1-G_i) + \sum_{j=1}^{q} M_{L_i}\right] \qquad \text{Equation 17}$$

Where:

H_a = Monthly allowable organic HAP emissions, kg.

p = Number of different coating materials applied in a month.

M_i = mass of as-purchased coating material, i, applied in a month, kg.

G_i = Mass fraction of each coating material, i, which was applied at 20 mass percent or greater coating solids content, on an as-applied basis, kg/kg.

C_{si} = Coating solids content of coating material, i, expressed as a mass fraction, kg/kg.

q = Number of different materials added to the coating material.

$M_{L,j}$ = Mass of non-coating-solids-containing coating material, j, added to coating-solids-containing coating materials which were applied at less than 20 mass percent coating solids content, on an as-applied basis, in a month, kg.

or Equation 18 for a new affected source:

sfrattini on LAPJZKW1R2 with $$_JOB
VerDate Sep<11>2014 09:16 Apr 04, 2023 Jkt 256165 PO 00000 Frm 00665 Fmt 8010 Sfmt 8010 Q:\40\256165.XXX PC31
ER09JY20.014</GPH>

$$H_a = 0.08\left[\sum_{i=1}^{p} M_i G_i C_{si}\right] + 0.016\left[\sum_{i=1}^{p} M_i (1 - G_i) + \sum_{j=1}^{q} M_{L_j}\right]$$

Equation 18

Where:

H_a = Monthly allowable organic HAP emissions, kg.

p = Number of different coating materials applied in a month.

M_i = Mass of as-purchased coating material, i, applied in a month, kg.

G_i = Mass fraction of each coating material, i, which was applied at 20 mass percent or greater coating solids content, on an as-applied basis, kg/kg.

C_{si} = Coating solids content of coating material, i, expressed as a mass fraction, kg/kg.

q = Number of different materials added to the coating material.

M_{Lj} = Mass of non-coating-solids-containing coating material, j, added to coating-solids-containing coating materials which were applied at less than 20 mass percent coating solids content, on an as-applied basis, in a month, kg.

(n) [Reserved]

(o) *Combinations of capture and control.* If you operate more than one capture system, more than one control device, one or more never-controlled work stations, or one or more intermittently-controlled work stations, you must calculate organic HAP emissions according to the procedures in paragraphs (o)(1) through (4) of this section, and use the calculation procedures specified in paragraph (o)(5) of this section to convert the monitoring and other data into units of the selected control option in paragraphs (f) through (i) of this section. Use the procedures specified in paragraph (o)(6) of this section to demonstrate compliance.

(1) *Solvent recovery system using liquid-liquid material balance compliance demonstration.* If you choose to comply by means of a liquid-liquid material balance for each solvent recovery system used to control one or more web coating lines, you must determine the organic HAP emissions for those web coating lines controlled by that solvent recovery system either:

(i) In accordance with paragraphs (j)(1)(i) through (iii) and (v) through (vii) of this section, if the web coating lines controlled by that solvent recovery system have only always-controlled work stations; or

(ii) In accordance with paragraphs (j)(1)(ii), (iii), (v), and (vi) and (p) of this section, if the web coating lines controlled by that solvent recovery system have one or more never-controlled or intermittently-controlled work stations.

(2) *Solvent recovery system using performance test compliance demonstration and CEMS.* To demonstrate compliance through an initial test of capture efficiency, continuous monitoring of a capture system operating parameter, and a CEMS on each solvent recovery system used to control one or more web coating lines, you must:

(i) For each capture system delivering emissions to that solvent recovery system, monitor the operating parameter established in accordance with § 63.3350(f) to ensure capture system efficiency; and

(ii) Determine the organic HAP emissions for those web coating lines served by each capture system delivering emissions to that solvent recovery system either:

(A) In accordance with paragraphs (j)(2)(i) through (iii), (v), (vi), and (viii) of this section, if the web coating lines served by that capture and control system have only always-controlled work stations; or

(B) In accordance with paragraphs (j)(2)(i) through (iii), (vi), and (p) of this section, if the web coating lines served by that capture and control system have one or more never-controlled or intermittently-controlled work stations.

(3) *Oxidizer.* To demonstrate compliance through performance tests of capture efficiency and control device efficiency, continuous monitoring of capture system, and CPMS for control device operating parameters for each oxidizer used to control emissions from one or more web coating lines, you must:

sfrattini on LAPJZKW1R2 with $$_JOB
VerDate Sep<11>2014 09:16 Apr 04, 2023 Jkt 256165 PO 00000 Frm 00666 Fmt 8010 Sfmt 8010 Q:\40\256165.XXX PC31
ER09JY20.015</GPH>

(i) Monitor the operating parameter in accordance with § 63.3350(e) to ensure control device efficiency; and

(ii) For each capture system delivering emissions to that oxidizer, monitor the operating parameter established in accordance with § 63.3350(f) to ensure capture efficiency; and

(iii) Determine the organic HAP emissions for those web coating lines served by each capture system delivering emissions to that oxidizer either:

(A) In accordance with paragraphs (l)(1)(i) through (vi) of this section, if the web coating lines served by that capture and control system have only always-controlled work stations; or

(B) In accordance with paragraphs (l)(1)(i) through (iii), (v), and (p) of this section, if the web coating lines served by that capture and control system have one or more never-controlled or intermittently-controlled work stations.

(4) *Uncontrolled coating lines*. If you own or operate one or more uncontrolled web coating lines, you must determine the organic HAP applied on those web coating lines using Equation 10. The organic HAP emitted from an uncontrolled web coating line is equal to the organic HAP applied on that web coating line.

(5) Convert the information obtained under paragraphs (o)(1) through (4) of this section into the units of the selected compliance option using the calculation procedures specified in paragraphs (o)(5)(i) through (iv) of this section.

(i) *Organic HAP emitted*. Calculate the organic HAP emissions for the affected source for the month by summing all organic HAP emissions calculated according to paragraphs (o)(1), (o)(2)(ii), (o)(3)(iii), and (o)(4) of this section.

(ii) *Coating solids applied*. If demonstrating compliance on the basis of organic HAP emission rate based on coating solids applied or emission of less than the calculated allowable organic HAP, the owner or operator must determine the coating solids content of each coating material applied during the month following the procedure in § 63.3360(d).

(iii) *Organic HAP emission rate based on coating solids applied*. Calculate the organic HAP emission rate based on coating solids applied for each month using Equation 13.

(iv) *Organic HAP based on materials applied*. Calculate the organic HAP emission rate based on material applied using Equation 14.

(6) *Compliance*. The affected source is in compliance with the emission standards in § 63.3320(b) for the month if all operating parameters required to be monitored under paragraphs (o)(1) through (3) of this section were maintained at the values established under §§ 63.3350 and 63.3360 and one of the standards in paragraphs (o)(6)(i) through (iv) of this section were met. If operating parameter deviations occurred, the affected source is in compliance with the emission standards in § 63.3320(b) for the month if, assuming no control of emissions or by estimating the emissions using a control destruction efficiency curve for each 3-hour deviation period, one of the standards in paragraphs (6)(i) through (iv) of this section were met.

(i) The total mass of organic HAP emitted by the affected source based on coating solids applied is no more than 0.20 kg organic HAP per kg coating solids applied at an existing affected source and no more than 0.08 kg organic HAP per kg coating solids applied at a new affected source; or

(ii) The total mass of organic HAP emitted by the affected source based on material applied is no more than 0.04 kg organic HAP per kg material applied at an existing affected source and no more than 0.016 kg organic HAP per kg material applied at a new affected source; or

(iii) The total mass of organic HAP emitted by the affected source during the month is less than the calculated allowable organic HAP as determined using paragraph (m) of this section; or

(iv) The total mass of organic HAP emitted by the affected source was not more than 5 percent of the total mass of organic HAP applied for the month at an existing affected source and no more than 2 percent of the total mass of organic HAP applied for the month at a new affected source. The total mass of organic HAP applied by the affected source in the month must be determined using Equation 10.

sfrattini on LAPJZKW1R2 with $$_JOB
VerDate Sep<11>2014 09:16 Apr 04, 2023 Jkt 256165 PO 00000 Frm 00667 Fmt 8010 Sfmt 8010 Q:\40\256165.XXX PC31

(p) *Intermittently-controlled and never-controlled work stations.* If you have been expressly referenced to this paragraph by paragraph (o)(1)(ii), (o)(2)(ii)(B), or (o)(3)(iii)(B) of this section for calculation procedures to determine organic HAP emissions for your intermittently-controlled and never-controlled work stations, you must:

(1) Determine the sum of the mass of all coating materials as-applied on intermittently-controlled work stations operating in bypass mode and the mass of all coating materials as-applied on never-controlled work stations during the month.

(2) Determine the sum of the mass of all coating materials as-applied on intermittently-controlled work stations operating in a controlled mode and the mass of all coating materials applied on always-controlled work stations during the month.

(3) *Liquid-liquid material balance compliance demonstration.* For each web coating line or group of web coating lines for which you use the provisions of paragraph (o)(1)(ii) of this section, you must calculate the organic HAP emitted during the month using Equation 19 of this section:

$$H_e = \left[\sum_{i=1}^{p} M_{Ci} C_{ahi}\right]\left[1 - \frac{R_v}{100}\right] + \left[\sum_{i=1}^{p} M_{Bi} C_{ahi}\right] - M_{vret}$$

Equation 19

Where:

H_e = Total monthly organic HAP emitted, kg.

p = Number of different coating materials applied in a month.

M_{ci} = Sum of the mass of coating material, i, as-applied on intermittently-controlled work stations operating in controlled mode and the mass of coating material, i, as-applied on always-controlled work stations, in a month, kg.

C_{ahi} = Monthly average, as-applied, organic HAP content of coating material, i, expressed as a mass fraction, kg/kg.

R_v = Organic volatile matter collection and recovery efficiency, percent.

M_{Bi} = Sum of the mass of coating material, i, as-applied on intermittently-controlled work stations operating in bypass mode and the mass of coating material, i, as-applied on never-controlled work stations, in a month, kg.

C_{ahi} = Monthly average, as-applied, organic HAP content of coating material, i, expressed as a mass fraction, kg/kg.

M_{vret} = Mass of volatile matter retained in the coated web after curing or drying, or otherwise not emitted to the atmosphere, kg. The value of this term will be zero in all cases except where you choose to take into account the volatile matter retained in the coated web or otherwise not emitted to the atmosphere for the compliance demonstration procedures in this section.

(4) *Performance test to determine capture efficiency and control device efficiency.* For each web coating line or group of web coating lines for which you use the provisions of paragraph (o)(2)(ii)(B) or (o)(3)(iii)(B) of this section, you must calculate the organic HAP emitted during the month using Equation 20:

$$H_e = \left[\sum_{i=1}^{p} M_{Ci} C_{ahi}\right]\left[1 - \frac{R}{100}\right] + \left[\sum_{i=1}^{p} M_{Bi} C_{ahi}\right] - M_{vret}$$

Equation 20

Where:

H_e = Total monthly organic HAP emitted, kg.

p = Number of different coating materials applied in a month.

M_{ci} = Sum of the mass of coating material, i, as-applied on intermittently-controlled work stations operating in controlled mode and the mass of coating material, i, as-applied on always-controlled work stations, in a month, kg.

sfrattini on LAPJZKW1R2 with $$_JOB
VerDate Sep<11>2014 09:16 Apr 04, 2023 Jkt 256165 PO 00000 Frm 00668 Fmt 8010 Sfmt 8010 Q:\40\256165.XXX PC31
ER09JY20.016</GPH> ER09JY20.017</GPH>

C_{ahi} = Monthly average, as-applied, organic HAP content of coating material, i, expressed as a mass fraction, kg/kg.

R = Overall organic HAP control efficiency, percent.

M_{Bi} = Sum of the mass of coating material, i, as-applied on intermittently-controlled work stations operating in bypass mode and the mass of coating material, i, as-applied on never-controlled work stations, in a month, kg.

C_{ahi} = Monthly average, as-applied, organic HAP content of coating material, i, expressed as a mass fraction, kg/kg.

M_{vret} = Mass of volatile matter retained in the coated web after curing or drying, or otherwise not emitted to the atmosphere, kg. The value of this term will be zero in all cases except where you choose to take into account the volatile matter retained in the coated web or otherwise not emitted to the atmosphere for the compliance demonstration procedures in this section.

(q) *Always-controlled work stations with more than one capture and control system.* If you operate more than one capture system or more than one control device and only have always-controlled work stations, then you are in compliance with the emission standards in §63.3320(b)(1) for the month if for each web coating line or group of web coating lines controlled by a common control device:

(1) The volatile matter collection and recovery efficiency as determined by paragraphs (j)(1)(i), (iii), (v), and (vi) of this section is at least 95 percent at an existing affected source and at least 98 percent at a new affected source; or

(2) The overall organic HAP control efficiency as determined by paragraphs (j)(2)(i) through (iv) of this section for each web coating line or group of web coating lines served by that control device and a common capture system is at least 95 percent at an existing affected source and at least 98 percent at a new affected source; or

(3) The overall organic HAP control efficiency as determined by paragraphs (l)(1)(i) through (iii) and (l)(2)(i) of this section for each web coating line or group of web coating lines served by that control device and a common capture system is at least 95 percent at an existing affected source and at least 98 percent at a new affected source.

(r) *Mass-balance approach.* As an alternative to §63.3370(b) through (p), you may demonstrate monthly compliance using a mass-balance approach in accordance with this section, except for any month that you elect to meet the emission limitation in §63.3320(b)(4). The mass-balance approach should be performed as follows:

(1) Separately for each individual/grouping(s) of lines, you must sum the mass of organic HAP emitted during the month and divide by the corresponding total mass of all organic HAP applied on the lines, or total mass of coating materials applied on the lines, or total mass of coating solids applied on the lines, for the same period, in accordance with the emission limitation that you have elected at §63.3320(b)(1) through (3) for the month's demonstration. You may also choose to use volatile organic content as a surrogate for organic HAP for the compliance demonstration in accordance with §63.3360(d). You are required to include all emissions and inputs that occur during periods that each line or grouping of lines operates in accordance with the applicability criteria in §63.3300.

(2) You must include all of the organic HAP emitted by your individual/grouping(s) of lines, as follows.

(i) You must record the mass of organic HAP or volatile organic content utilized at all work stations of all of your individually/grouping(s) of lines. You must additionally record the mass of all coating materials applied at these work stations if you are demonstrating compliance for the month with the emission limitation at §63.3320(b)(2) (the ''coating materials'' option). You must additionally record the mass of all coating solids applied at these work stations if you are demonstrating compliance for the month with the emission limitation at §63.3320(b)(3) (the ''coating solids'' option).

(ii) You must assume that all of the organic HAP input to all never-controlled work stations is emitted, unless you have determined an emission factor in accordance with §63.3360(g).

(iii) For all always-controlled work stations, you must assume that all of the organic HAP or volatile organic content is emitted, less the reductions provided by the corresponding capture

sfrattini on LAPJZKW1R2 with $$_JOB
VerDate Sep<11>2014 09:16 Apr 04, 2023 Jkt 256165 PO 00000 Frm 00669 Fmt 8010 Sfmt 8010 Q:\40\256165.XXX PC31

system and control device, in accordance with the most recently measured capture and destruction efficiencies, or in accordance with the measured mass of volatile organic compounds (VOC) recovered for the month (*e.g.*, carbon control or condensers). You may account for organic HAP or volatile organic content retained in the coated web or otherwise not emitted if you have determined an emission factor in accordance with § 63.3360(g).

(iv) For all intermittently-controlled work stations, you must assume that all of the organic HAP or volatile organic content is emitted during periods of no control. During periods of control, you must assume that all of the organic HAP or volatile organic content is emitted, less the reductions provided by the corresponding capture system and control device, in accordance with the most recently measured capture and destruction efficiencies, or in accordance with the measured mass of VOC recovered for the month (*e.g.*, carbon control or condensers). You may account for organic HAP or volatile organic content retained in the coated web or otherwise not emitted if you have determined an emission factor in accordance with § 63.3360(g).

(v) You must record the organic HAP or volatile organic content input to all work stations of your individual/grouping(s) of lines and the mass of coating materials and/or solids applied, if applicable, and determine corresponding emissions during all periods of operation, including malfunctions or startups and shutdowns of any web coating line or control device.

(3) You are in compliance with the emission standards in § 63.3320(b) if each of your individual/grouping(s) of lines, meets one of the requirements in paragraphs (r)(3)(i) through (iii) of this section, as applicable. If operating parameter limit deviations occurred, including periods that the oxidizer control device(s), if any, operated at an average combustion temperature more than 50 degrees Fahrenheit below the temperature established in accordance with § 63.3360(e), or the 3-hour average temperature difference across the catalyst bed at no less than 80 percent of this average temperature differential and the catalytic oxidizer maintained a minimum temperature 50 degrees Fahrenheit above the catalyst's ignition temperature, you are in compliance with the emission standards in § 63.3320(b) for the month, if assuming no control of emissions for each 3-hour deviation period (or in accordance with an alternate approved method), one of the requirements in paragraphs (r)(3)(i) through (iii) of this section was met.

(i) The total mass of organic HAP emitted by the affected source based on HAP applied is no more than 0.05 kg organic HAP per kg HAP applied at an existing affected source and no more than 0.02 kg organic HAP per kg HAP applied at a new affected source; or

(ii) The total mass of organic HAP emitted by the affected source based on coating solids applied is no more than 0.20 kg organic HAP per kg coating solids applied at an existing affected source and no more than 0.08 kg organic HAP per kg coating solids applied at a new affected source; or

(iii) The total mass of organic HAP emitted by the affected source based on material applied is no more than 0.04 kg organic HAP per kg material applied at an existing affected source and no more than 0.016 kg organic HAP per kg material applied at a new affected source.

(s) *Non-HAP coating.* You must demonstrate that all of the coatings applied at all of the web coating lines at the affected source have organic HAP contents below 0.1 percent by mass for OSHA-defined carcinogens as specified in section A.6.4 of appendix A to 29 CFR 1910.1200, and below 1.0 percent by mass for other organic HAP compounds using the procedures in § 63.3370(s)(1) through (3).

(1) Determine the organic HAP mass fraction of each coating material ''as purchased'' by following one of the procedures in paragraphs § 63.3360(c)(1) through (3) and determine the organic HAP mass fraction of each coating material ''as applied'' by following the procedures in paragraph § 63.3360(c)(4).

(2) Submit to your permitting authority a report certifying that all coatings applied at all of the web coating lines at your effected source are non-HAP coatings.

sfrattini on LAPJZKW1R2 with $$_JOB
VerDate Sep<11>2014 09:16 Apr 04, 2023 Jkt 256165 PO 00000 Frm 00670 Fmt 8010 Sfmt 8010 Q:\40\256165.XXX PC31

(3) Maintain records of coating formulations used as required in § 63.3410(a)(1)(iii).

(4) Resume reporting requirements if any of the coating formulations are modified to exceed the thresholds in § 63.3370(s) or new coatings which exceed the thresholds in paragraph (s) of this section are used.

[67 FR 72341, Dec. 4, 2002, as amended at 85 FR 41301, July 9, 2020]

NOTIFICATIONS, REPORTS, AND RECORDS

§ 63.3400 What notifications and reports must I submit?

(a) *Reports*. Each owner or operator of an affected source subject to this subpart must submit the reports specified in paragraphs (b) through (k) of this section to the Administrator.

(b) *Initial notifications*. You must submit an initial notification as required by § 63.9(b), using the procedure in § 63.3400(h).

(1) Initial notification for existing affected sources must be submitted no later than 1 year before the compliance date specified in § 63.3330(a), or no later than 120 days after the source becomes subject to this subpart, whichever is later.

(2) Initial notification for new and reconstructed affected sources must be submitted as required by § 63.9(b).

(3) For the purpose of this subpart, a title V or part 70 permit application may be used in lieu of the initial notification required under § 63.9(b), provided the same information is contained in the permit application as required by § 63.9(b) and the State to which the permit application has been submitted has an approved operating permit program under part 70 of this chapter and has received delegation of authority from the EPA to implement and enforce this subpart.

(4) If you are using a permit application in lieu of an initial notification in accordance with paragraph (b)(3) of this section, the permit application must be submitted by the same due date specified for the initial notification.

(c) You must submit a semiannual compliance report according to paragraphs (c)(1) and (2) of this section.

(1) Compliance report dates.

(i) The first compliance report must cover the period beginning on the compliance date that is specified for your affected source in § 63.3330 and ending on June 30 or December 31, whichever date is the first date following the end of the calendar half immediately following the compliance date that is specified for your affected source in § 63.3330.

(ii) The first compliance report is due no later than July 31 or January 31, whichever date follows the end of the calendar half immediately following the compliance date that is specified for your affected source in § 63.3330. Prior to the electronic template being available in CEDRI for one year, the report must be postmarked or delivered by the aforementioned dates. After the electronic template has been available in CEDRI for 1 year, the next full report must be submitted electronically as described in paragraph (h) of this section.

(iii) Each subsequent compliance report must cover the semiannual reporting period from January 1 through June 30 or the semiannual reporting period from July 1 through December 31.

(iv) Each subsequent compliance report must be submitted electronically no later than July 31 or January 31, whichever date is the first date following the end of the semiannual reporting period.

(v) For each affected source that is subject to permitting regulations pursuant to 40 CFR part 70 or 40 CFR part 71, and the permitting authority has established dates for submitting semiannual reports pursuant to § 70.6(a)(3)(iii)(A) or § 71.6(a)(3)(iii)(A), you may submit the first and subsequent compliance reports according to the dates the permitting authority has established instead of according to the dates in paragraphs (c)(1)(i) through (iv) of this section.

(2) *Compliance report contents*. The compliance report must contain the information in paragraphs (c)(2)(i) through (viii) of this section:

(i) Company name and address.

(ii) Statement by a responsible official with that official's name, title, and signature certifying the accuracy of the content of the report.

sfrattini on LAPJZKW1R2 with $$_JOB
VerDate Sep<11>2014 09:16 Apr 04, 2023 Jkt 256165 PO 00000 Frm 00671 Fmt 8010 Sfmt 8010 Q:\40\256165.XXX PC31

(iii) Date of report and beginning and ending dates of the reporting period.

(iv) If there are no deviations from any emission limitations (emission limit or operating limit) that apply to you, a statement that there were no deviations from the emission limitations during the reporting period, and that no CMS was inoperative, inactive, malfunctioning, out-of-control, repaired, or adjusted.

(v) For each deviation from an emission limitation (emission limit or operating limit) that applies to you and that occurs at an affected source where you are not using a CMS to comply with the emission limitations in this subpart, the compliance report must contain the following information:

(A) The total operating time of the web coating line(s) during the reporting period.

(B) Information on the number, duration, and cause of deviations (including unknown cause), if applicable, and the corrective action taken.

(C) An estimate of the quantity of each regulated pollutant emitted over the emission limits in § 63.3320 for each monthly period covered in the report if the source failed to meet an applicable emission limit of this subpart.

(vi) For each deviation from an emission limit occurring at an affected source where you are using a CEMS or CPMS to comply with the emission limit in this subpart, you must include the following information:

(A) The total operating time of the web coating line(s) during the reporting period.

(B) The date and time that each CEMS and CPMS, if applicable, was inoperative except for zero (low-level) and high-level checks.

(C) The date and time that each CEMS and CPMS, if applicable, was out-of-control, including the information in § 63.8(c)(8).

(D) The date and time that each deviation started and stopped, and whether each deviation occurred during a period of startup, shutdown, or malfunction or during another period.

(E) A summary of the total duration (in hours) of each deviation during the reporting period and the total duration of each deviation as a percent of the total source operating time during that reporting period.

(F) A breakdown of the total duration of the deviations during the reporting period into those that are due to startup, shutdown, control equipment problems, process problems, other known causes, and other unknown causes.

(G) A summary of the total duration (in hours) of CEMS and/or CPMS downtime during the reporting period and the total duration of CEMS and/or CPMS downtime as a percent of the total source operating time during that reporting period.

(H) A breakdown of the total duration of CEMS and/or CPMS downtime during the reporting period into periods that are due to monitoring equipment malfunctions, non-monitoring equipment malfunctions, quality assurance/quality control calibrations, other known causes, and other unknown causes.

(I) The date of the latest CEMS and/or CPMS certification or audit.

(J) A description of any changes in CEMS, CPMS, or controls since the last reporting period.

(K) An estimate of the quantity of each regulated pollutant emitted over the emission limits in § 63.3320 for each monthly period covered in the report if the source failed to meet an applicable emission limit of this subpart.

(d) You must submit a Notification of Performance Tests as specified in §§ 63.7 and 63.9(e) if you are complying with the emission standard using a control device and you are required to conduct a performance test of the control device. This notification and the site-specific test plan required under § 63.7(c)(2) must identify the operating parameters to be monitored to ensure that the capture efficiency of the capture system and the control efficiency of the control device determined during the performance test are maintained. Unless EPA objects to the parameter or requests changes, you may consider the parameter approved.

(e) *Notification of Compliance Status.* You must submit a Notification of Compliance Status as specified in § 63.9(h). For affected sources that commence construction or reconstruction

sfrattini on LAPJZKW1R2 with $$_JOB
VerDate Sep<11>2014 09:16 Apr 04, 2023 Jkt 256165 PO 00000 Frm 00672 Fmt 8010 Sfmt 8010 Q:\40\256165.XXX PC31

after September 19, 2019, the Notification of Compliance Status must be submitted electronically using the procedure in paragraph (h) of this section. For affected sources that commenced construction or reconstruction on or before September 19, 2019, the Notification of Compliance Status must be submitted electronically using the procedure in paragraph (h) starting July 9, 2021.

(f) *Performance test reports*. You must submit performance test reports as specified in § 63.10(d)(2) if you are using a control device to comply with the emission standard and you have not obtained a waiver from the performance test requirement or you are not exempted from this requirement by § 63.3360(b). Catalyst activity test results are not required to be submitted but must be maintained onsite. Within 60 days after the date of completing each performance test required by this subpart, you must submit the results of the performance test following the procedures specified in paragraphs (f)(1) through (3) of this section. For affected sources that commence construction or reconstruction after September 19, 2019, the performance test reports must be submitted electronically using the procedure in paragraph (h) of this section. For affected sources that commenced construction or reconstruction on or before September 19, 2019, the performance test reports must be submitted electronically using the procedure in paragraph (h) starting July 9, 2021.

(1) *Data collected using test methods supported by EPA's Electronic Reporting Tool (ERT) as listed on EPA's ERT website (https://www.epa.gov/electronic-reporting-air-emissions/electronic-reporting-tool-ert) at the time of the test*. Submit the results of the performance test to EPA via CEDRI, which can be accessed through EPA's Central Data Exchange (CDX) (*https://cdx.epa.gov/*). The data must be submitted in a file format generated through the use of EPA's ERT. Alternatively, you may submit an electronic file consistent with the extensible markup language (XML) schema listed on EPA's ERT website.

(2) *Data collected using test methods that are not supported by EPA's ERT as listed on EPA's ERT website at the time of the test*. The results of the performance test must be included as an attachment in the ERT or an alternate electronic file consistent with the XML schema listed on EPA's ERT website. Submit the ERT generated package or alternative file to EPA via CEDRI.

(3) *Confidential business information (CBI)*. If you claim some of the information submitted under paragraph (f)(1) of this section is CBI, you must submit a complete file, including information claimed to be CBI, to EPA. The file must be generated through the use of EPA's ERT or an alternate electronic file consistent with the XML schema listed on EPA's ERT website. Submit the file on a compact disc, flash drive, or other commonly used electronic storage medium and clearly mark the medium as CBI. Mail the electronic medium to U.S. EPA/OAQPS/CORE CBI Office, Attention: Group Leader, Measurement Policy Group, MD C404–02, 4930 Old Page Rd., Durham, NC 27703. The same file with the CBI omitted must be submitted to EPA via EPA's CDX as described in paragraph (f)(1) of this section.

(g) *Performance evaluation reports*. You must submit the results of performance evaluations within 60 days of completing each CMS performance evaluation (as defined in § 63.2) following the procedures specified in paragraphs (g)(1) through (3) of this section. For affected sources that commence construction or reconstruction after September 19, 2019, the performance evaluation reports must be submitted electronically using the procedure in paragraph (h) of this section. For affected sources that commenced construction or reconstruction on or before September 19, 2019, the performance evaluation reports must be submitted electronically using the procedure in paragraph (h) starting July 9, 2021.

(1) *Performance evaluations of CMS measuring relative accuracy test audit (RATA) pollutants that are supported by EPA's ERT as listed on EPA's ERT website at the time of the evaluation*. Submit the results of the performance evaluation to EPA via CEDRI, which can be accessed through EPA's CDX. The data must be submitted in a file

sfrattini on LAPJZKW1R2 with $$_JOB
VerDate Sep<11>2014 09:16 Apr 04, 2023 Jkt 256165 PO 00000 Frm 00673 Fmt 8010 Sfmt 8010 Q:\40\256165.XXX PC31

format generated through the use of EPA's ERT. Alternatively, you may submit an electronic file consistent with the XML schema listed on EPA's ERT website.

(2) *Performance evaluations of CMS measuring RATA pollutants that are not supported by EPA's ERT as listed on EPA's ERT website at the time of the evaluation*. The results of the performance evaluation must be included as an attachment in the ERT or an alternate electronic file consistent with the XML schema listed on EPA's ERT website. Submit the ERT generated package or alternative file to EPA via CEDRI.

(3) *Confidential business information (CBI)*. If you claim some of the information submitted under paragraph (g)(1) of this section is CBI, you must submit a complete file, including information claimed to be CBI, to EPA. The file must be generated through the use of EPA's ERT or an alternate electronic file consistent with the XML schema listed on EPA's ERT website. Submit the file on a compact disc, flash drive, or other commonly used electronic storage medium and clearly mark the medium as CBI. Mail the electronic medium to U.S. EPA/OAQPS/CORE CBI Office, Attention: Group Leader, Measurement Policy Group, MD C404–02, 4930 Old Page Rd., Durham, NC 27703. The same file with the CBI omitted must be submitted to EPA via EPA's CDX as described in paragraph (g)(1) of this section.

(h) *Electronic reporting*. If you are required to submit reports following the procedure specified in this paragraph, you must submit reports to EPA via CEDRI, which can be accessed through EPA's CDX (*https://cdx.epa.gov/*). Initial notifications and notifications of compliance status must be submitted as portable document formats (PDF) to CEDRI using the attachment module of the ERT. You must use the semiannual compliance report template on the CEDRI website (*https://www.epa.gov/electronic-reporting-air-emissions/compliance-and-emissions-data-reporting-interface-cedri)* for this subpart 1 year after it becomes available. The date report templates become available will be listed on the CEDRI website. The report must be submitted by the deadline specified in this subpart, regardless of the method in which the report is submitted. If you claim some of the information required to be submitted via CEDRI is CBI, submit a complete report, including information claimed to be CBI to EPA. The report must be generated using the appropriate form on the CEDRI website. Submit the file on a compact disc, flash drive, or other commonly used electronic storage medium and clearly mark the medium as CBI. Mail the electronic medium to U.S. EPA/OAQPS/CORE CBI Office, Attention: Group Leader, Measurement Policy Group, MD C404–02, 4930 Old Page Rd., Durham, NC 27703. The same file with the CBI omitted must be submitted to EPA via EPA's CDX as described earlier in this paragraph.

(i) *Extension for CDX/CEDRI outage*. If you are required to electronically submit a report through CEDRI in EPA's CDX, you may assert a claim of EPA system outage for failure to timely comply with the reporting requirement. To assert a claim of EPA system outage, you must meet the requirements outlined in paragraphs (i)(1) through (7) of this section.

(1) You must have been or will be precluded from accessing CEDRI and submitting a required report within the time prescribed due to an outage of either EPA's CEDRI or CDX systems.

(2) The outage must have occurred within the period of time beginning 5 business days prior to the date that the submission is due.

(3) The outage may be planned or unplanned.

(4) You must submit notification to the Administrator in writing as soon as possible following the date you first knew, or through due diligence should have known, that the event may cause or has caused a delay in reporting.

(5) You must provide to the Administrator a written description identifying:

(i) The date(s) and time(s) when CDX or CEDRI was accessed and the system was unavailable;

(ii) A rationale for attributing the delay in reporting beyond the regulatory deadline to EPA system outage;

(iii) Measures taken or to be taken to minimize the delay in reporting; and

(iv) The date by which you propose to report, or if you have already met the

sfrattini on LAPJZKW1R2 with $$_JOB
VerDate Sep<11>2014 09:16 Apr 04, 2023 Jkt 256165 PO 00000 Frm 00674 Fmt 8010 Sfmt 8010 Q:\40\256165.XXX PC31

reporting requirement at the time of the notification, the date you reported.

(6) The decision to accept the claim of EPA system outage and allow an extension to the reporting deadline is solely within the discretion of the Administrator.

(7) In any circumstance, the report must be submitted electronically as soon as possible after the outage is resolved.

(j) *Extension for force majeure events.* If you are required to electronically submit a report through CEDRI in EPA's CDX, you may assert a claim of force majeure for failure to timely comply with the reporting requirement. To assert a claim of force majeure, you must meet the requirements outlined in paragraphs (j)(1) through (5) of this section.

(1) You may submit a claim if a force majeure event is about to occur, occurs, or has occurred or there are lingering effects from such an event within the period of time beginning five business days prior to the date the submission is due. For the purposes of this section, a force majeure event is defined as an event that will be or has been caused by circumstances beyond the control of the affected facility, its contractors, or any entity controlled by the affected facility that prevents you from complying with the requirement to submit a report electronically within the time period prescribed. Examples of such events are acts of nature (*e.g.*, hurricanes, earthquakes, or floods), acts of war or terrorism, or equipment failure or safety hazard beyond the control of the affected facility (*e.g.*, large scale power outage).

(2) You must submit notification to the Administrator in writing as soon as possible following the date you first knew, or through due diligence should have known, that the event may cause or has caused a delay in reporting.

(3) You must provide to the Administrator:

(i) A written description of the force majeure event;

(ii) A rationale for attributing the delay in reporting beyond the regulatory deadline to the force majeure event;

(iii) Measures taken or to be taken to minimize the delay in reporting; and

(iv) The date by which you propose to report, or if you have already met the reporting requirement at the time of the notification, the date you reported.

(4) The decision to accept the claim of force majeure and allow an extension to the reporting deadline is solely within the discretion of the Administrator.

(5) In any circumstance, the reporting must occur as soon as possible after the force majeure event occurs.

(k) *SSM reports.* For affected sources that commenced construction or reconstruction before September 19, 2019, you must submit SSM reports as specified in §63.10(d)(5), except that the provisions in subpart A of this part pertaining to startups, shutdowns, and malfunctions do not apply unless a control device is used to comply with this subpart. On and after, July 9, 2021, and for affected sources that commence construction or reconstruction after September 19, 2019, this section is no longer relevant.

(1) If actions taken by an owner or operator during a startup, shutdown, or malfunction of an affected source (including actions taken to correct a malfunction) are not consistent with the procedures specified in the affected source's SSMP required by §63.6(e)(3), the owner or operator must state such information in the report. The startup, shutdown, or malfunction report must consist of a letter containing the name, title, and signature of the responsible official who is certifying its accuracy and must be submitted to the Administrator.

(2) Separate startup, shutdown, and malfunction reports are not required if the information is included in the report specified in paragraph (c)(2)(vi) of this section.

[67 FR 72341, Dec. 4, 2002, as amended at 85 FR 41313, July 9, 2020; 85 FR 73905, Nov. 19, 2020]

§63.3410 What records must I keep?

(a) Each owner or operator of an affected source subject to this subpart must maintain the records specified in paragraphs (a)(1) and (2) of this section on a monthly basis in accordance with the requirements of §63.10(b)(1):

sfrattini on LAPJZKW1R2 with $$_JOB
VerDate Sep<11>2014 09:16 Apr 04, 2023 Jkt 256165 PO 00000 Frm 00675 Fmt 8010 Sfmt 8010 Q:\40\256165.XXX PC31

(1) Records specified in § 63.10(b)(2) of all measurements needed to demonstrate compliance with this standard as indicated in Table 2 to subpart JJJJ of part 63, including:

(i) Continuous emission monitor data in accordance with the requirements of § 63.3350(d);

(ii) Control device and capture system operating parameter data in accordance with the requirements of § 63.3350(c), (e), and (f);

(iii) Organic HAP content data for the purpose of demonstrating compliance in accordance with the requirements of § 63.3360(c);

(iv) Volatile matter and coating solids content data for the purpose of demonstrating compliance in accordance with the requirements of § 63.3360(d);

(v) Overall control efficiency determination using capture efficiency and control device destruction or removal efficiency test results in accordance with the requirements of § 63.3360(e) and (f);

(vi) Material usage, organic HAP usage, volatile matter usage, and coating solids usage and compliance demonstrations using these data in accordance with the requirements of § 63.3370(b), (c), and (d); and

(vii) Emission factor development calculations and HAP content for coating materials used to develop the emission factor as needed for § 63.3360(g).

(2) Records specified in § 63.10(c) for each CMS operated by the owner or operator in accordance with the requirements of § 63.3350(b), as indicated in Table 2 to subpart JJJJ of part 63.

(b) Each owner or operator of an affected source subject to this subpart must maintain records of all liquid-liquid material balances performed in accordance with the requirements of § 63.3370. The records must be maintained in accordance with the applicable requirements of § 63.10(b).

(c) For each deviation from an operating limit occurring at an affected source, you must record the following information.

(1) The total operating time the web coating line(s) controlled by the corresponding add-on control device and/or emission capture system during the reporting period.

(2) Date, time, duration, and cause of the deviations.

(3) If the facility determines by its monthly compliance demonstration, in accordance with § 63.3370, as applicable, that the source failed to meet an applicable emission limit of this subpart, you must record the following for the corresponding affected equipment:

(i) Record an estimate of the quantity of HAP (or VOC if used a surrogate in accordance with § 63.3360(d)) emitted in excess of the emission limit for the month, and a description of the method used to estimate the emissions.

(ii) Record actions taken to minimize emissions in accordance with § 63.3340(a), and any corrective actions taken to return the affected unit to its normal or usual manner of operation.

(d) Records of results from the annual catalyst activity test, if applicable.

(e) Any records required to be maintained by this part that are submitted electronically via EPA's CEDRI may be maintained in electronic format. This ability to maintain electronic copies does not affect the requirement for facilities to make records, data, and reports available upon request to a delegated air agency or the EPA as part of an on-site compliance evaluation.

[85 FR 41316, July 9, 2020]

DELEGATION OF AUTHORITY

§ 63.3420 What authorities may be delegated to the States?

(a) In delegating implementation and enforcement authority to a state, local, or tribal agency under 40 CFR part 63, subpart E, the authorities contained in paragraph (b) of this section must be retained by the EPA Administrator and not transferred to a state, local, or tribal agency.

(b) Authority which will not be delegated to state, local, or tribal agencies are listed in paragraphs (b)(1) and (2) of this section:

(1) Approval of alternate test method for organic HAP content determination under § 63.3360(c).

(2) Approval of alternate test method for volatile matter determination under § 63.3360(d).

[85 FR 41316, July 9, 2020]

sfrattini on LAPJZKW1R2 with $$_JOB
VerDate Sep<11>2014 09:16 Apr 04, 2023 Jkt 256165 PO 00000 Frm 00676 Fmt 8010 Sfmt 8010 Q:\40\256165.XXX PC31

TABLE 1 TO SUBPART JJJJ OF PART 63—OPERATING LIMITS IF USING ADD-ON CONTROL DEVICES AND CAPTURE SYSTEM

If you are required to comply with operating limits by § 63.3321, you must comply with the applicable operating limits in the following table:

For the following device:	You must meet the following operating limit:	And you must demonstrate continuous compliance with operating limits by:
1. Thermal oxidizer	a. The average combustion temperature in any 3-hour period must not fall more than 50 °F below the combustion temperature limit established according to § 63.3360(e)(3)(i).	i. Collecting the combustion temperature data according to § 63.3350(e)(10); ii. Reducing the data to 3-hour block averages; and iii. Maintain the 3-hour average combustion temperature at or above the temperature limit.
2. Catalytic oxidizer	a. The average temperature at the inlet to the catalyst bed in any 3-hour period must not fall more than 50 degrees Fahrenheit below the combustion temperature limit established according to § 63.3360(e)(3)(ii).	i. Collecting the catalyst bed inlet temperature data according to § 63.3350(e)(10); ii. Reducing the data to 3-hour block averages; and iii. Maintain the 3-hour average catalyst bed inlet temperature at or above the temperature limit.
	b. The temperature rise across the catalyst bed must not fall below 80 percent of the limit established according to § 63.3360(e)(3)(ii), provided that the minimum temperature is always 50 degrees Fahrenheit above the catalyst's ignition temperature.	i. Collecting the catalyst bed inlet and outlet temperature data according to § 63.3350(e)(10); ii. Reducing the data to 3-hour block averages; and iii. Maintain the 3-hour average temperature rise across the catalyst bed at or above the limit, and maintain the minimum temperature at least 50 degrees Fahrenheit above the catalyst's ignition temperature
3. Emission capture system.	Submit monitoring plan to the Administrator that identifies operating parameters to be monitored according to § 63.3350(f).	Conduct monitoring according to the plan (§ 63.3350(f)(3)).

[85 FR 41316, July 9, 2020]

TABLE 2 TO SUBPART JJJJ OF PART 63—APPLICABILITY OF 40 CFR PART 63 GENERAL PROVISIONS TO SUBPART JJJJ

You must comply with the applicable General Provisions requirements according to the following table:

General provisions reference	Applicable to subpart JJJJ	Explanation
§ 63.1(a)(1)–(4)	Yes.	
§ 63.1(a)(5)	No	Reserved.
§ 63.1(a)(6)–(8)	Yes.	
§ 63.1(a)(9)	No	Reserved.
§ 63.1(a)(10)–(14)	Yes.	
§ 63.1(b)(1)	No	Subpart JJJJ specifies applicability.
§ 63.1(b)(2)–(3)	Yes.	
§ 63.1(c)(1)	Yes.	
§ 63.1(c)(2)	No	Area sources are not subject to emission standards of subpart JJJJ.
§ 63.1(c)(3)	No	Reserved.
§ 63.1(c)(4)	Yes.	
§ 63.1(c)(5)	Yes.	
§ 63.1(c)(6)	Yes.	
§ 63.1(d)	No	Reserved.
§ 63.1(e)	Yes.	
§ 63.2	Yes	Additional definitions in subpart JJJJ.
§ 63.3(a)–(c)	Yes.	
§ 63.4(a)(1)–(3)	Yes.	
§ 63.4(a)(4)	No	Reserved.
§ 63.4(a)(5)	Yes.	
§ 63.4(b)–(c)	Yes.	
§ 63.5(a)(1)–(2)	Yes.	
§ 63.5(b)(1)	Yes.	
§ 63.5(b)(2)	No	Reserved.
§ 63.5(b)(3)–(6)	Yes.	
§ 63.5(c)	No	Reserved.
§ 63.5(d)	Yes.	
§ 63.5(e)	Yes.	
§ 63.5(f)	Yes.	

sfrattini on LAPJZKW1R2 with $$_JOB
VerDate Sep<11>2014 09:16 Apr 04, 2023 Jkt 256165 PO 00000 Frm 00677 Fmt 8010 Sfmt 8002 Q:\40\256165.XXX PC31

General provisions reference	Applicable to subpart JJJJ	Explanation
§ 63.6(a)	Yes	Applies only when capture and control system is used to comply with the standard.
§ 63.6(b)(1)–(5)	No	§ 63.3330 specifies compliance dates.
§ 63.6(b)(6)	No	Reserved.
§ 63.6(b)(7)	Yes.	
§ 63.6(c)(1)–(2)	Yes.	
§ 63.6(c)(3)–(4)	No	Reserved.
§ 63.6(c)(5)	Yes.	
§ 63.6(d)	No	Reserved.
§ 63.6(e)(1)(i)	Depends, see explanation	No, for new or reconstructed sources which commenced construction or reconstruction after September 19, 2019, see § 63.3340(a) for generalduty requirement. Yes, for all other affected sources before July 9, 2021, and No thereafter, see § 63.3340(a) for general duty requirement.
§ 63.6(e)(1)(ii)	Depends, see explanation	No, for new or reconstructed sources which commenced construction or reconstruction after September 19, 2019. Yes, for all other affected sources before July 9, 2021, and No thereafter.
§ 63.6(e)(1)(iii)	Yes.	
§ 63.6(e)(2)	No	Reserved.
§ 63.6(e)(3)	Depends, see explanation	No, for new or reconstructed sources which commenced construction or reconstruction after September 19, 2019. Yes, for all other affected sources before July 9, 2021, and No thereafter.
§ 63.6(f)(1)	Depends, see explanation	No, for new or reconstructed sources which commenced construction or reconstruction after September 19, 2019. Yes, for all other affected sources before July 9, 2021, and No thereafter.
§ 63.6(f)(2)–(3)	Yes.	
§ 63.6(g)	Yes.	
§ 63.6(h)	No	Subpart JJJJ does not require continuous opacity monitoring systems (COMS).
§ 63.6(i)(1)–(14)	Yes.	
§ 63.6(i)(15)	No	Reserved.
§ 63.6(i)(16)	Yes.	
§ 63.6(j)	Yes.	
§ 63.7(a)–(d)	Yes.	
§ 63.7(e)(1)	No	See § 63.3360(e)(2).
§ 63.7(e)(2)–(3)	Yes.	
§ 63.7(f)–(h)	Yes.	
§ 63.8(a)(1)–(2)	Yes.	
§ 63.8(a)(3)	No	Reserved.
§ 63.8(a)(4)	No	Subpart JJJJ does not have monitoring requirements for flares.
§ 63.8(b)	Yes.	
§ 63.8(c)(1) and § 63.8(c)(1)(i)	Depends, see explanation	No, for new or reconstructed sources which commenced construction or reconstruction after September 19, 2019, see § 63.3340(a) for generalduty requirement. Yes, for all other affected sources before July 9, 2021, and No thereafter, see § 63.3340(a) for general duty requirement.
§ 63.8(c)(1)(ii)	Yes	§ 63.8(c)(1)(ii) only applies if you use capture and control systems.
§ 63.8(c)(1)(iii)	Depends, see explanation	No, for new or reconstructed sources which commenced construction or reconstruction after September 19, 2019. Yes, for all other affected sources beforeJuly 9, 2021, and No thereafter.
§ 63.8(c)(2)–(3)	Yes	See § 63.3350(e)(10)(iv) for temperature sensor validation procedures
§ 63.8(c)(4)	No	§ 63.3350 specifies the requirements for the operation of CMS for capture systems and add-on control devices at sources using these to comply.
§ 63.8(c)(5)	No	Subpart JJJJ does not require COMS.
§ 63.8(c)(6)–(8)	Yes	Provisions for COMS are not applicable.
§ 63.8(d)(1)–(2)	Yes	Refer to § 63.3350(e)(5) for CPMS quality control procedures to be included in the quality control program.
§ 63.8(d)(3)	No	§ 63.3350(e)(5) specifies the program of corrective action.
§ 63.8(e)–(f)	Yes	§ 63.8(e)(2) does not apply to CPMS. § 63.8(f)(6) only applies if you use CEMS.
§ 63.8(g)	Yes	Only applies if you use CEMS.
§ 63.9(a)	Yes.	
§ 63.9(b)(1)	Yes.	
§ 63.9(b)(2)	Yes	Except § 63.3400(b)(1) requires submittal of initial notification for existing affected sources no later than 1 year before compliance date.

sfrattini on LAPJZKW1R2 with $$_JOB
VerDate Sep<11>2014 09:16 Apr 04, 2023 Jkt 256165 PO 00000 Frm 00678 Fmt 8010 Sfmt 8002 Q:\40\256165.XXX PC31

General provisions reference	Applicable to subpart JJJJ	Explanation
§ 63.9(b)(3)–(5)	Yes.	
§ 63.9(c)–(e)	Yes.	
§ 63.9(f)	No	Subpart JJJJ does not require opacity and visible emissions observations.
§ 63.9(g)	Yes	Provisions for COMS are not applicable.
§ 63.9(h)(1)–(3)	Yes.	
§ 63.9(h)(4)	No	Reserved.
§ 63.9(h)(5)–(6)	Yes.	
§ 63.9(i)	Yes.	
§ 63.9(j)	Yes.	
§ 63.9(k)	Yes	Only as specified in § 63.9(j).
§ 63.10(a)	Yes.	
§ 63.10(b)(1)	Yes.	
§ 63.10(b)(2)(i)	Depends, see explanation	No, for new or reconstructed sources which commenced construction or reconstruction after September 19, 2019. Yes, for all other affected sources beforeJuly 9, 2021, and No thereafter.
§ 63.10(b)(2)(ii)	No	See § 63.3410 for recordkeeping of relevant information.
§ 63.10(b)(2)(iii)	Yes	§ 63.10(b)(2)(iii) only applies if you use a capture and control system.
§ 63.10(b)(2)(iv)–(v)	Depends, see explanation	No, for new or reconstructed sources which commenced construction or reconstruction after September 19, 2019. Yes, for all other affected sources beforeJuly 9, 2021, and No thereafter.
§ 63.10(b)(2)(vi)–(xiv)	Yes.	
§ 63.10(b)(3)	Yes.	
§ 63.10(c)(1)	Yes.	
§ 63.10(c)(2)–(4)	No	Reserved.
§ 63.10(c)(5)–(8)	Yes.	
§ 63.10(c)(9)	No	Reserved.
§ 63.10(c)(10)–(14)	Yes.	
§ 63.10(c)(15)	Depends, see explanation	No, for new or reconstructed sources which commenced construction or reconstruction after September 19, 2019. Yes, for all other affected sources beforeJuly 9, 2021, and No thereafter.
§ 63.10(d)(1)–(2)	Yes.	
§ 63.10(d)(3)	No	Subpart JJJJ does not require opacity and visible emissions observations.
§ 63.10(d)(4)	Yes.	
§ 63.10(d)(5)(i)	Depends, see explanation	No, for new or reconstructed sources which commenced construction or reconstruction after September 19, 2019. Yes, for all other affected sources beforeJuly 9, 2021, and No thereafter. See § 63.3400(c) for malfunction reporting requirements.
§ 63.10(d)(5)(ii)	Depends, see explanation	No, for new or reconstructed sources which commenced construction or reconstruction after September 19, 2019. Yes, for all other affected sources before July 9, 2021, and No thereafter. See § 63.3400(c) for malfunction reporting requirements.
§ 63.10(e)(1)–(2)	Yes	Provisions for COMS are not applicable.
§ 63.10(e)(3)–(4)	No	Subpart JJJJ does not require opacity and visible emissions observations.
§ 63.10(f)	Yes.	
§ 63.11	No	Subpart JJJJ does not specify use of flares for compliance.
§ 63.12	Yes.	
§ 63.13	Yes.	
§ 63.14	Yes	Subpart JJJJ includes provisions for alternative ASME and ASTM test methods that are incorporated by reference.
§ 63.15	Yes.	
§ 63.16	Yes.	

[85 FR 41317, July 9, 2020, as amended at 85 FR 73905, Nov. 19, 2020]

sfrattini on LAPJZKW1R2 with $$_JOB
VerDate Sep<11>2014 09:16 Apr 04, 2023 Jkt 256165 PO 00000 Frm 00679 Fmt 8010 Sfmt 8026 Q:\40\256165.XXX PC31

Subpart KKKK—National Emission Standards for Hazardous Air Pollutants: Surface Coating of Metal Cans

SOURCE: 68 FR 64446, Nov. 13, 2003, unless otherwise noted.

WHAT THIS SUBPART COVERS

§ 63.3480 What is the purpose of this subpart?

This subpart establishes national emission standards for hazardous air pollutants (NESHAP) for metal can surface coating facilities. This subpart also establishes requirements to demonstrate initial and continuous compliance with the emission limitations.

§ 63.3481 Am I subject to this subpart?

(a) Except as provided in paragraph (c) of this section, the source category to which this subpart applies is surface coating of metal cans and ends (including decorative tins) and metal crowns and closures. It includes the subcategories listed in paragraphs (a)(1) through (4) of this section. Surface coating is the application of coatings to a substrate using, for example, spray guns or dip tanks.

(1) *One- and two-piece draw and iron can body coating*. The one- and two-piece draw and iron can body coating subcategory includes all coating processes involved in the manufacture of can bodies by the draw and iron process. This subcategory includes three distinct coating type segments reflecting the coatings appropriate for cans with different end uses. Those are two-piece beverage can body coatings, two-piece food can body coatings, and one-piece aerosol can body coatings.

(2) *Sheetcoating*. The sheetcoating subcategory includes all of the flat metal sheetcoating operations associated with the manufacture of three-piece cans, decorative tins, crowns, and closures.

(3) *Three-piece can body assembly coating*. The three-piece can body assembly coating subcategory includes all of the coating processes involved in the assembly of three-piece metal can bodies. The subcategory includes five distinct coating type segments reflecting the coatings appropriate for cans with different end uses. Those are inside spray on food cans, aseptic side seam stripes on food cans, nonaseptic side seam stripes on food cans, side seam stripes on general line nonfood cans, and side seam stripes on aerosol nonfood cans.

(4) *End coating*. The end coating subcategory includes the application of end seal compounds and repair spray coatings to metal can ends. This subcategory includes three distinct coating type segments reflecting the end seal compounds and repair sprays appropriate for can ends with different end uses. Those are aseptic end seal compounds, nonaseptic end seal compounds, and repair spray coatings.

(b) You are subject to this subpart if you own or operate a new, reconstructed, or existing affected source, as defined in § 63.3482, that uses 5,700 liters (1,500 gallons (gal)) per year, or more, of coatings in the source category defined in paragraph (a) of this section and that is a major source, is located at a major source, or is part of a major source of emissions of hazardous air pollutants (HAP). A major source of HAP emissions is any stationary source or group of stationary sources located within a contiguous area and under common control that emits or has the potential to emit, considering controls, any single HAP at a rate of 9.07 megagrams (Mg) (10 tons) or more per year or any combination of HAP at a rate of 22.68 Mg (25 tons) or more per year.

(c) This subpart does not apply to surface coating that meets the criteria of paragraphs (c)(1) through (5) of this section.

(1) Surface coating conducted at a source that uses only coatings, thinners, and cleaning materials that contain no organic HAP, as determined according to § 63.3521(a).

(2) Surface coating subject to any other NESHAP in this part as of November 13, 2003.

(3) Surface coating and cleaning activities that use research or laboratory equipment or that are part of janitorial, building, and facility maintenance operations.

(4) Surface coating of continuous metal coil that may subsequently be used in manufacturing cans. Subpart

sfrattini on LAPJZKW1R2 with $$_JOB
VerDate Sep<11>2014 09:16 Apr 04, 2023 Jkt 256165 PO 00000 Frm 00680 Fmt 8010 Sfmt 8010 Q:\40\256165.XXX PC31

SSSS of this part covers surface coating performed on a continuous metal coil substrate.

(5) Surface coating of metal pails, buckets, and drums. Subpart MMMM of this part covers surface coating of all miscellaneous metal parts and products not explicitly covered by another subpart.

[68 FR 64446, Nov. 13, 2003, as amended at 71 FR 1383, Jan. 6, 2006; 85 FR 10847, Feb. 25, 2020]

§ 63.3482 What parts of my plant does this subpart cover?

(a) This subpart applies to each new, reconstructed, and existing affected source.

(b) The affected source is the collection of all of the items listed in paragraphs (b)(1) through (4) of this section that are used for surface coating of metal cans and ends (including decorative tins), or metal crowns or closures:

(1) All coating operations as defined in § 63.3561;

(2) All storage containers and mixing vessels in which coatings, thinners, and cleaning materials are stored or mixed;

(3) All manual and automated equipment and containers used for conveying coatings, thinners, and cleaning materials; and

(4) All storage containers and all manual and automated equipment and containers used for conveying waste materials generated by a coating operation.

(c) An affected source is a new affected source if you commenced its construction after January 15, 2003 by installing new coating equipment. New coating equipment is equipment used to perform metal can surface coating at a facility where no metal can surface coating was previously performed and the construction is of a completely new metal can surface coating source where previously no metal can surface coating source had existed.

(d) An affected source is reconstructed if you meet the criteria as defined in § 63.2.

(e) An affected source is existing if it is not new or reconstructed.

§ 63.3483 When do I have to comply with this subpart?

The date by which you must comply with this subpart is called the compliance date. The compliance date for each type of affected source is specified in paragraphs (a) through (c) of this section. The compliance date begins the initial compliance period during which you conduct the initial compliance demonstration described in §§ 63.3520, 63.3530, 63.3540, and 63.3550.

(a) For a new or reconstructed affected source, the compliance date is the applicable date in paragraph (a)(1) or (2) of this section.

(1) If the initial startup of your new or reconstructed affected source is before November 13, 2003, the compliance date is November 13, 2003.

(2) If the initial startup of your new or reconstructed affected source occurs after November 13, 2003, the compliance date is the date of initial startup of your affected source.

(b) For an existing affected source, the compliance date is November 13, 2006.

(c) For an area source that increases its emissions or its potential to emit such that it becomes a major source of HAP emissions, the compliance date is specified in paragraphs (c)(1) and (2) of this section.

(1) For any portion of the source that becomes a new or reconstructed affected source subject to this subpart, the compliance date is the date of initial startup of the affected source or November 13, 2003 whichever is later.

(2) For any portion of the source that becomes an existing affected source subject to this subpart, the compliance date is the date 1 year after the area source becomes a major source or November 13, 2006, whichever is later.

(d) You must meet the notification requirements in § 63.3510 according to the dates specified in that section and in subpart A of this part. Some of the notifications must be submitted before the compliance dates described in paragraphs (a) through (c) of this section.

sfrattini on LAPJZKW1R2 with $$_JOB
VerDate Sep<11>2014 09:16 Apr 04, 2023 Jkt 256165 PO 00000 Frm 00681 Fmt 8010 Sfmt 8010 Q:\40\256165.XXX PC31

EMISSION LIMITATIONS

§ 63.3490 What emission limits must I meet?

(a) For a new or reconstructed affected source, you must limit organic HAP emissions to the atmosphere to no more than the emission limit(s) in Table 1 to this subpart that apply to you during each 12-month compliance period, determined according to the requirements in § 63.3521, § 63.3531, or § 63.3541; or if you control emissions with an emissions control system using the control efficiency/outlet concentration option as specified in § 63.3491(d), you must reduce organic HAP emissions to the atmosphere to no more than the limit(s) in Table 3 to this subpart, determined according to the requirements of § 63.3551. If you perform surface coating in more than one subcategory or utilize more than one coating type within a subcategory, then you must meet the individual emission limit(s) for each subcategory and coating type included.

(b) For an existing affected source, you must limit organic HAP emissions to the atmosphere to no more than the emission limit(s) in Table 2 to this subpart that apply to you during each 12-month compliance period, determined according to the requirements in § 63.3521, § 63.3531, or § 63.3541; or if you control emissions with an emissions control system using the control efficiency/outlet concentration option as specified in § 63.3491(d), you must reduce organic HAP emissions to the atmosphere to no more than the limit(s) in Table 3 to this subpart, determined according to the requirements of § 63.3551. If you perform surface coating in more than one subcategory or utilize more than one coating type within a subcategory, then you must meet the individual emission limit(s) for each subcategory and coating type included.

(c) If you perform surface coating in different subcategories as described in § 63.3481(a)(1) through (4), then the coating operations in each subcategory constitute a separate affected source, and you must conduct separate compliance demonstrations for each applicable subcategory and coating type emission limit in paragraphs (a) and (b) of this section and reflect those separate determinations in notifications, reports, and records required by §§ 63.3510, 63.3511, and 63.3512, respectively.

§ 63.3491 What are my options for meeting the emission limits?

You must include all coatings and thinners used in all surface coating operations within a subcategory or coating type segment when determining whether the organic HAP emission rate is equal to or less than the applicable emission limit in § 63.3490. To make that determination, you must use at least one of the four compliance options listed in paragraphs (a) through (d) of this section. You may apply any of the compliance options to an individual coating operation or to multiple coating operations within a subcategory or coating type segment as a group. You may use different compliance options for different coating operations or at different times on the same coating operation. However, you may not use different compliance options at the same time on the same coating operation. If you switch between compliance options for any coating operation or group of coating operations, you must document that switch as required by § 63.3512(c), and you must report it in the next semiannual compliance report required in § 63.3511.

(a) *Compliant material option*. Demonstrate that the organic HAP content of each coating used in the coating operation(s) is less than or equal to the applicable emission limit in § 63.3490, and that each thinner used contains no organic HAP. You must meet all the requirements of §§ 63.3520, 63.3521, and 63.3522 to demonstrate compliance with the emission limit using this option.

(b) *Emission rate without add-on controls option*. Demonstrate that, based on the coatings and thinners used in the coating operation(s), the organic HAP emission rate for the coating operation(s) is less than or equal to the applicable emission limit in § 63.3490, calculated as a rolling 12-month emission rate and determined on a monthly basis. You must meet all the requirements of §§ 63.3530, 63.3531, and 63.3532 to demonstrate compliance with the emission limit using this option.

(c) *Emission rate with add-on controls option*. Demonstrate that, based on the

sfrattini on LAPJZKW1R2 with $$_JOB
VerDate Sep<11>2014 09:16 Apr 04, 2023 Jkt 256165 PO 00000 Frm 00682 Fmt 8010 Sfmt 8010 Q:\40\256165.XXX PC31

coatings and thinners used in the coating operation(s) and the emission reductions achieved by emission capture systems and add-on controls, the organic HAP emission rate for the coating operation(s) is less than or equal to the applicable emission limit in §63.3490, calculated as a rolling 12-month emission rate and determined on a monthly basis. If you use this compliance option, you must also demonstrate that all emission capture systems and add-on control devices for the coating operation(s) used for purposes of complying with this subpart meet the operating limits required in §63.3492, except for solvent recovery systems for which you conduct liquid-liquid material balances according to §63.3541(i), and that you meet the work practice standards required in §63.3493. You must meet all the requirements of §§63.3540 through 63.3547 to demonstrate compliance with the emission limits, operating limits, and work practice standards using this option.

(d) *Control efficiency/outlet concentration option*. Demonstrate that, based on the emission reductions achieved by emission capture systems and add-on controls, total HAP emissions measured as total hydrocarbon (THC) are reduced by 95 percent or greater for existing sources, or 97 percent or greater for new or reconstructed sources, or that outlet THC emissions are less than or equal to 20 parts per million by volume, dry basis (ppmvd). If you use this compliance option, you must have a capture device that meets EPA Method 204 of 40 CFR part 51, appendix M criteria for a permanent total enclosure (PTE). You must also demonstrate that all emission capture systems and add-on control devices for the coating operation(s) used for purposes of complying with this subpart meet the operating limits required in §63.3492, and that you meet the work practice standards required in §63.3493. You must meet all the requirements of §§63.3550 through 63.3557 to demonstrate compliance with the emission limits, operating limits, and work practice standards using this option.

§63.3492 What operating limits must I meet?

(a) For any coating operation(s) on which you use the compliant material option or the emission rate without add-on controls option, you are not required to meet any operating limits.

(b) For any controlled coating operation(s) on which you use the emission rate with add-on controls option or the control efficiency/outlet concentration option, except those for which you use a solvent recovery system and conduct a liquid-liquid material balance according to §63.3541(i), you must meet the operating limits specified in Table 4 to this subpart. Those operating limits apply to the emission capture and control systems for the coating operation(s) used for purposes of complying with this subpart. You must establish the operating limits during the performance tests required in §63.3540 or §63.3550 according to the requirements in §63.3546 or §63.3556. You must meet the operating limits established during the most recent performance tests required in §63.3540 or §63.3550 at all times after they have been established during the performance test.

(c) If you use an add-on control device other than those listed in Table 4 to this subpart or wish to monitor an alternative parameter and comply with a different operating limit, you must apply to the Administrator for approval of alternative monitoring under §63.8(f).

[68 FR 64446, Nov. 13, 2003, as amended at 71 FR 1383, Jan. 6, 2006; 85 FR 10847, Feb. 25, 2020]

§63.3493 What work practice standards must I meet?

(a) For any coating operation(s) for which you use the compliant material option or the emission rate without add-on controls option, you are not required to meet any work practice standards.

(b) If you use the emission rate with add-on controls option or the control efficiency/outlet concentration option to comply with the emission limitations, you must develop and implement a work practice plan to minimize organic HAP emissions from the storage, mixing, and conveying of coatings, thinners, and cleaning materials used

sfrattini on LAPJZKW1R2 with $$_JOB
VerDate Sep<11>2014 09:16 Apr 04, 2023 Jkt 256165 PO 00000 Frm 00683 Fmt 8010 Sfmt 8010 Q:\40\256165.XXX PC31

in, and waste materials generated by, the coating operation(s) for which you use those options; or you must meet an alternative standard as provided in paragraph (c) of this section. The plan must specify practices and procedures to ensure that, at a minimum, the elements specified in paragraphs (b)(1) through (5) of this section are implemented.

(1) All organic-HAP-containing coatings, thinners, cleaning materials, and waste materials must be stored in closed containers.

(2) Spills of organic-HAP-containing coatings, thinners, cleaning materials, and waste materials must be minimized.

(3) Organic-HAP-containing coatings, thinners, cleaning materials, and waste materials must be conveyed from one location to another in closed containers or pipes.

(4) Mixing vessels which contain organic-HAP-containing coatings and other materials must be closed except when adding to, removing, or mixing the contents.

(5) Emissions of organic HAP must be minimized during cleaning of storage, mixing, and conveying equipment.

(c) As provided in § 63.6(g), we, the U.S. Environmental Protection Agency (U.S. EPA), may choose to grant you permission to use an alternative to the work practice standards in this section.

GENERAL COMPLIANCE REQUIREMENTS

§ 63.3500 What are my general requirements for complying with this subpart?

(a) You must be in compliance with the emission limitations in this subpart as specified in paragraphs (a)(1) and (2) of this section.

(1) Any coating operation(s) for which you use the compliant material option or the emission rate without add-on controls option, as specified in § 63.3491(a) and (b), must be in compliance with the applicable emission limit in § 63.3490 at all times.

(2) Any coating operation(s) for which you use the emission rate with add-on controls option, as specified in § 63.3491(c), or the control efficiency/outlet concentration option, as specified in § 63.3491(d), must be in compliance with the emission limitations as specified in paragraphs (a)(2)(i) through (iii) of this section.

(i) The coating operation(s) must be in compliance with the applicable emission limit in § 63.3490 at all times.

(ii) The coating operation(s) must be in compliance with the operating limits for emission capture systems and add-on control devices required by § 63.3492 at all times, except for those for which you use a solvent recovery system and conduct liquid-liquid material balances according to § 63.3541(i). The operating limits apply only to capture systems and control devices used for purposes of complying with this subpart.

(iii) The coating operation(s) must be in compliance with the work practice standards in § 63.3493 at all times.

(b) Before August 24, 2020, you must always operate and maintain your affected source, including all air pollution control and monitoring equipment you use for purposes of complying with this subpart, according to the provisions in § 63.6(e)(1)(i). On and after August 24, 2020, at all times, the owner or operator must operate and maintain any affected source, including associated air pollution control equipment and monitoring equipment, in a manner consistent with safety and good air pollution control practices for minimizing emissions. The general duty to minimize emissions does not require the owner or operator to make any further efforts to reduce emissions if levels required by the applicable standard have been achieved. Determination of whether a source is operating in compliance with operation and maintenance requirements will be based on information available to the Administrator that may include, but is not limited to, monitoring results, review of operation and maintenance procedures, review of operation and maintenance records, and inspection of the affected source.

(c) Before August 24, 2020, if your affected source uses an emission capture system and add-on control device for purposes of complying with this subpart, you must develop a written start-up, shutdown, and malfunction plan (SSMP) according to the provisions in

sfrattini on LAPJZKW1R2 with $$_JOB
VerDate Sep<11>2014 09:16 Apr 04, 2023 Jkt 256165 PO 00000 Frm 00684 Fmt 8010 Sfmt 8010 Q:\40\256165.XXX PC31

§63.6(e)(3). The plan must address start-up, shutdown, and corrective actions in the event of a malfunction of the emission capture system or the add-on control device. The plan must also address any coating operation equipment that may cause increased emissions or that would affect capture efficiency if the process equipment malfunctions, such as conveyors that move parts among enclosures. On and after August 24, 2020, the SSMP is not required.

[68 FR 64446, Nov. 13, 2003, as amended at 71 FR 20464, Apr. 20, 2006; 85 FR 10847, Feb. 25, 2020]

§63.3501 What parts of the General Provisions apply to me?

Table 5 to this subpart shows which parts of the General Provisions in §§63.1 through 63.15 apply to you.

NOTIFICATIONS, REPORTS, AND RECORDS

§63.3510 What notifications must I submit?

(a) *General.* You must submit the notifications in §§63.7(b) and (c), 63.8(f)(4), and 63.9(b) through (e) and (h) that apply to you by the dates specified in those sections, except as provided in paragraphs (b) and (c) of this section.

(b) *Initial notification.* You must submit the Initial Notification required by §63.9(b) for a new or reconstructed affected source no later than 120 days after initial startup, no later than 120 days after the source becomes subject to this subpart, or 120 days after November 13, 2003, whichever is later. For an existing affected source, you must submit the Initial Notification no later than November 13, 2004, or no later than 120 days after the source becomes subject to this subpart, whichever is later.

(c) *Notification of compliance status.* You must submit the Notification of Compliance Status required by §63.9(h) no later than 30 calendar days following the end of the initial compliance period described in §63.3520, §63.3530, §63.3540, or §63.3550 that applies to your affected source. The Notification of Compliance Status must contain the information specified in paragraphs (c)(1) through (9) of this section and in §63.9(h).

(1) Company name and address.

(2) Statement by a responsible official with that official's name, title, and signature certifying the truth, accuracy, and completeness of the content of the report.

(3) Date of the report and beginning and ending dates of the reporting period. The reporting period is the initial compliance period described in §63.3520, §63.3530, §63.3540, or §63.3550 that applies to your affected source.

(4) Identification of the compliance option or options specified in §63.3491 that you used on each coating operation in the affected source during the initial compliance period.

(5) Statement of whether or not the affected source achieved the emission limitations for the initial compliance period.

(6) If you had a deviation, include the information in paragraphs (c)(6)(i) and (ii) of this section.

(i) A description and statement of the cause of the deviation.

(ii) If you failed to meet the applicable emission limit in §63.3490, include all the calculations you used to determine the kilogram (kg) organic HAP emitted per liter of coating solids used. You do not need to submit information provided by the materials suppliers or manufacturers or test reports.

(7) For each of the data items listed in paragraphs (c)(7)(i) through (iv) of this section that is required by the compliance option(s) you used to demonstrate compliance with the emission limit, include an example of how you determined the value, including calculations and supporting data. Supporting data can include a copy of the information provided by the supplier or manufacturer of the example coating or material or a summary of the results of testing conducted according to §63.3521(a), (b), or (c). You do not need to submit copies of any test reports.

(i) Mass fraction of organic HAP for one coating and for one thinner.

(ii) Volume fraction of coating solids for one coating.

(iii) Density for one coating and one thinner, except that if you use the compliant material option, only the example coating density is required.

(iv) The amount of waste materials and the mass of organic HAP contained in the waste materials for which you

sfrattini on LAPJZKW1R2 with $$_JOB
VerDate Sep<11>2014 09:16 Apr 04, 2023 Jkt 256165 PO 00000 Frm 00685 Fmt 8010 Sfmt 8010 Q:\40\256165.XXX PC31

are claiming an allowance in Equation 1 of § 63.3531.

(8) The calculation of kg organic HAP emitted per liter of coating solids used for the compliance option(s) you used, as specified in paragraphs (c)(8)(i) through (iii) of this section.

(i) For the compliant material option, provide an example calculation of the organic HAP content for one coating, using Equation 1 of § 63.3521.

(ii) For the emission rate without add-on controls option, provide the calculation of the total mass of organic HAP emissions for each month, the calculation of the total volume of coating solids used each month, and the calculation of the 12-month organic HAP emission rate, using Equations 1, 1A, 1B, 2, and 3, respectively, of § 63.3531, or Equation 4 of § 63.3531, if applicable.

(iii) For the emission rate with add-on controls option, provide the calculation of the total mass of organic HAP emissions for the coatings and thinners used each month, using Equations 1, 1A, and 1B of § 63.3531; the calculation of the total volume of coating solids used each month, using Equation 2 of § 63.3531; the calculation of the mass of organic HAP emission reduction each month by emission capture systems and add-on control devices, using Equations 1 and 1A through 1C of § 63.3541, and Equations 2, 3, 3A, and 3B of § 63.3541, as applicable; the calculation of the total mass of organic HAP emissions each month, using Equation 4 of § 63.3541, as applicable; and the calculation of the 12-month organic HAP emission rate, using the applicable equation, Equation 5 of § 63.3541 or Equation 4 of § 63.3531.

(9) For the emission rate with add-on controls option or the control efficiency/outlet concentration option, you must include the information specified in paragraphs (c)(9)(i) through (iv) of this section. The requirements in paragraphs (c)(9)(i) through (iii) of this section do not apply to solvent recovery systems for which you conduct liquid-liquid material balances according to § 63.3541(i).

(i) For each emission capture system, a summary of the data and copies of the calculations supporting the determination that the emission capture system is a PTE or a measurement of the emission capture system efficiency. Include a description of the protocol followed for measuring capture efficiency, summaries of any capture efficiency tests conducted, and any calculations supporting the capture efficiency determination. If you use the data quality objective (DQO) or lower confidence limit (LCL) approach, you must also include the statistical calculations to show you meet the DQO or LCL criteria in appendix A to subpart KK of this part. You do not need to submit complete test reports.

(ii) A summary of the results of each add-on control device performance test. You do not need to submit complete test reports.

(iii) A list of each emission capture system's and add-on control device's operating limits and a summary of the data used to calculate those limits.

(iv) A statement of whether or not you developed and implemented the work practice plan required by § 63.3493.

[68 FR 64446, Nov. 13, 2003, as amended at 71 FR 1383, Jan. 6, 2006; 85 FR 73905, Nov. 19, 2020]

§ 63.3511 What reports must I submit?

(a) *Semiannual compliance reports*. You must submit semiannual compliance reports for each affected source according to the requirements of paragraphs (a)(1) through (7) of this section. The semiannual compliance reporting requirements may be satisfied by reports required under other parts of the Clean Air Act (CAA), as specified in paragraph (a)(2) of this section.

(1) *Dates*. Unless the Administrator has approved a different schedule for submission of reports under § 63.10(a), you must prepare and submit each semiannual compliance report according to the dates specified in paragraphs (a)(1)(i) through (iv) of this section. Note that the information reported for each of the months in the reporting period will be based on the last 12 months of data prior to the date of each monthly calculation.

(i) The first semiannual compliance report must cover the first semiannual reporting period which begins the day after the end of the initial compliance period described in § 63.3520, § 63.3530, § 63.3540, or § 63.3550 that applies to your affected source and ends on June 30 or

sfrattini on LAPJZKW1R2 with $$_JOB
VerDate Sep<11>2014 09:16 Apr 04, 2023 Jkt 256165 PO 00000 Frm 00686 Fmt 8010 Sfmt 8010 Q:\40\256165.XXX PC31

December 31, whichever occurs first following the end of the initial compliance period.

(ii) Each subsequent semiannual compliance report must cover the subsequent semiannual reporting period from January 1 through June 30 or the semiannual reporting period from July 1 through December 31.

(iii) Each semiannual compliance report must be postmarked or delivered no later than July 31 or January 31, whichever date is the first date following the end of the semiannual reporting period.

(iv) For each affected source that is subject to permitting regulations pursuant to 40 CFR part 70 or 40 CFR part 71, and if the permitting authority has established dates for submitting semiannual reports pursuant to 40 CFR 70.6(a)(3)(iii)(A) or 40 CFR 71.6(a)(3)(iii)(A), you may submit the first and subsequent compliance reports according to the dates the permitting authority has established instead of the date specified in paragraph (a)(1)(iii) of this section.

(2) *Inclusion with title V report.* Each affected source that has obtained a title V operating permit pursuant to 40 CFR part 70 or 40 CFR part 71 must report all deviations as defined in this subpart in the semiannual monitoring report required by 40 CFR 70.6(a)(3)(iii)(A) or 40 CFR 71.6(a)(3)(iii)(A). If an affected source submits a semiannual compliance report pursuant to this section along with, or as part of, the semiannual monitoring report required by 40 CFR 70.6(a)(3)(iii)(A) or 40 CFR 71.6(a)(3)(iii)(A), and the semiannual compliance report includes all required information concerning deviations from any emission limitation in this subpart, its submission will be deemed to satisfy any obligation to report the same deviations in the semiannual monitoring report. However, submission of a semiannual compliance report shall not otherwise affect any obligation the affected source may have to report deviations from permit requirements to the permitting authority.

(3) *General requirements.* The semiannual compliance report must contain the information specified in paragraphs (a)(3)(i) through (v) of this section and the information specified in paragraphs (a)(4) through (7) and (c)(1) of this section that is applicable to your affected source.

(i) Company name and address.

(ii) Statement by a responsible official with that official's name, title, and signature, certifying the truth, accuracy, and completeness of the content of the report.

(iii) Date of report and beginning and ending dates of the reporting period. The reporting period is the 6-month period ending on June 30 or December 31. Note that the information reported for each of the 6 months in the reporting period will be based on the last 12 months of data prior to the date of each monthly calculation.

(iv) Identification of the compliance option or options specified in §63.3491 that you used on each coating operation during the reporting period. If you switched between compliance options during the reporting period, you must report the beginning and ending dates you used each option.

(v) If you used the emission rate without add-on controls or the emission rate with add-on controls compliance option (§63.3491(b) or (c)), the calculation results for each rolling 12-month organic HAP emission rate during the 6-month reporting period.

(4) *No deviations.* If there were no deviations from the emission limits, operating limits, or work practice standards in §§63.3490, 63.3492, and 63.3493 that apply to you, the semiannual compliance report must include a statement that there were no deviations from the emission limitations during the reporting period. If you used the emission rate with add-on controls option or the control efficiency/outlet concentration option and there were no periods during which the continuous parameter monitoring systems (CPMS) were out of control as specified in §63.8(c)(7), the semiannual compliance report must include a statement that there were no periods during which the CPMS were out of control during the reporting period.

(5) *Deviations: Compliant material option.* If you used the compliant material option and there was a deviation from the applicable emission limit in

sfrattini on LAPJZKW1R2 with $$_JOB
VerDate Sep<11>2014 09:16 Apr 04, 2023 Jkt 256165 PO 00000 Frm 00687 Fmt 8010 Sfmt 8010 Q:\40\256165.XXX PC31

§ 63.3490, the semiannual compliance report must contain the information in paragraphs (a)(5)(i) through (v) of this section.

(i) Identification of each coating used that deviated from the emission limit, each thinner used that contained organic HAP, and the date, time, and duration each was used.

(ii) The calculation of the organic HAP content (using Equation 1 of § 63.3521) for each coating identified in paragraph (a)(5)(i) of this section. You do not need to submit background data supporting this calculation (*e.g.*, information provided by coating suppliers or manufacturers, or test reports).

(iii) The determination of mass fraction of organic HAP for each coating and thinner identified in paragraph (a)(5)(i) of this section. You do not need to submit background data supporting this calculation (*e.g.*, information provided by material suppliers or manufacturers, or test reports).

(iv) Before August 24, 2020, a statement of the cause of each deviation. On and after August 24, 2020, a statement of the cause of each deviation (including unknown cause, if applicable).

(v) On and after August 24, 2020, the number of deviations and, for each deviation, a list of the affected source or equipment, an estimate of the quantity of each regulated pollutant emitted over any applicable emission limit in § 63.3490, a description of the method used to estimate the emissions, and the actions you took to minimize emissions in accordance with § 63.3500(b).

(6) *Deviations: Emission rate without add-on controls option.* If you used the emission rate without add-on controls option and there was a deviation from the applicable emission limit in § 63.3490, the semiannual compliance report must contain the information in paragraphs (a)(6)(i) through (iv) of this section.

(i) The beginning and ending dates of each compliance period during which the 12-month organic HAP emission rate exceeded the applicable emission limit in § 63.3490.

(ii) The calculations used to determine the 12-month organic HAP emission rate for the compliance period in which the deviation occurred. You must provide the calculations for Equations 1, 1A, 1B, 2, and 3 in § 63.3531 or Equation 4 in § 63.3531, if applicable; and, if applicable, the calculation used to determine mass of organic HAP in waste materials according to § 63.3531(e)(3). You do not need to submit background data supporting these calculations (*e.g.*, information provided by materials suppliers or manufacturers, or test reports).

(iii) Before August 24, 2020, a statement of the cause of each deviation. On and after August 24, 2020, a statement of the cause of each deviation (including unknown cause, if applicable).

(iv) On and after August 24, 2020, the number of deviations, date, time, duration, a list of the affected source or equipment, an estimate of the quantity of each regulated pollutant emitted over any applicable emission limit in § 63.3490, a description of the method used to estimate the emissions, and the actions you took to minimize emissions in accordance with § 63.3500(b).

(7) *Deviations: Emission rate with add-on controls option.* If you used the emission rate with add-on controls option and there was a deviation from the applicable emission limit in § 63.3490 or the applicable operating limit(s) in Table 4 to this subpart (including any periods when emissions bypassed the add-on control device and were diverted to the atmosphere), before August 24, 2020, the semiannual compliance report must contain the information in paragraphs (a)(7)(i) through (xiv) of this section. That includes periods of startup, shutdown, and malfunction during which deviations occurred. On and after August 24, 2020, the semiannual compliance report must contain the information in paragraphs (a)(7)(i) through (xii), (a)(7)(xiv), and (a)(7)(xv) of this section. If you use the emission rate with add-on controls option and there was a deviation from the applicable work practice standards in § 63.3493(b), the semiannual compliance report must contain the information in paragraph (a)(7)(xiii) of this section.

(i) The beginning and ending dates of each compliance period during which the 12-month organic HAP emission rate exceeded the applicable emission limit in § 63.3490.

sfrattini on LAPJZKW1R2 with $$_JOB
VerDate Sep<11>2014 09:16 Apr 04, 2023 Jkt 256165 PO 00000 Frm 00688 Fmt 8010 Sfmt 8010 Q:\40\256165.XXX PC31

(ii) The calculations used to determine the 12-month organic HAP emission rate for each compliance period in which a deviation occurred. You must provide the calculation of the total mass of organic HAP emissions for the coatings and thinners used each month, using Equations 1, 1A, and 1B of §63.3531 and, if applicable, the calculation used to determine mass of organic HAP in waste materials according to §63.3531(e)(3); the calculation of the total volume of coating solids used each month, using Equation 2 of §63.3531; the calculation of the mass of organic HAP emission reduction each month by emission capture systems and add-on control devices, using Equations 1 and 1A through 1C of §63.3541, and Equations 2, 3, 3A, and 3B of §63.3541, as applicable; the calculation of the total mass of organic HAP emissions each month, using Equation 4 of §63.3541; and the calculation of the 12-month organic HAP emission rate, using Equation 5 of §63.3541, or Equation 4 in §63.3531, if applicable. You do not need to submit the background data supporting these calculations (*e.g.*, information provided by materials suppliers or manufacturers, or test reports).

(iii) The date and time that each malfunction of the capture system or add-on control devices started and stopped.

(iv) A brief description of the CPMS.

(v) The date of the latest CPMS certification or audit.

(vi) Before August 24, 2020, the date and time that each CPMS was inoperative, except for zero (low-level) and high-level checks. On and after August 24, 2020, the number of instances that the CPMS was inoperative, and for each instance, except for zero (low-level) and high-level checks, the date, time, and duration that the CPMS was inoperative; the cause (including unknown cause) for the CPMS being inoperative; and the actions you took to minimize emissions in accordance with §63.3500(b).

(vii) Before August 24, 2020, the date, time, and duration that each CPMS was out of control, including the information in §63.8(c)(8). On and after August 24, 2020, the number of instances that the CPMS was out of control as specified in §63.8(c)(7) and, for each instance, the date, time, and duration that the CPMS was out-of-control; the cause (including unknown cause) for the CPMS being out-of-control; and descriptions of corrective actions taken.

(viii) Before August 24, 2020, the date and time period of each deviation from an operating limit in Table 4 to this subpart; date and time period of any bypass of the add-on control device; and whether each deviation occurred during a period of startup, shutdown, or malfunction or during another period. On and after August 24, 2020, the number of deviations from an operating limit in Table 4 to this subpart and, for each deviation, the date, time, and duration of each deviation; the date, time, and duration of any bypass of the add-on control device.

(ix) A summary of the total duration of each deviation from an operating limit in Table 4 to this subpart and each bypass of the add-on control device during the semiannual reporting period and the total duration as a percent of the total source operating time during that semiannual reporting period.

(x) Before August 24, 2020, a breakdown of the total duration of the deviations from the operating limits in Table 4 to this subpart and bypasses of the add-on control device during the semiannual reporting period into those that were due to startup, shutdown, control equipment problems, process problems, other known causes, and other unknown causes. On and after August 24, 2020, a breakdown of the total duration of the deviations from the operating limits in Table 4 to this subpart and bypasses of the add-on control device during the semiannual reporting period into those that were due to control equipment problems, process problems, other known causes, and other unknown causes.

(xi) A summary of the total duration of CPMS downtime during the semiannual reporting period and the total duration of CPMS downtime as a percent of the total source operating time during that semiannual reporting period.

(xii) A description of any changes in the CPMS, coating operation, emission

sfrattini on LAPJZKW1R2 with $$_JOB
VerDate Sep<11>2014 09:16 Apr 04, 2023 Jkt 256165 PO 00000 Frm 00689 Fmt 8010 Sfmt 8010 Q:\40\256165.XXX PC31

capture system, or add-on control device since the last semiannual reporting period.

(xiii) Before August 24, 2020, for each deviation from the work practice standards, a description of the deviation; the date, and time period of the deviation; and the actions you took to correct the deviation. On and after August 24, 2020, for deviations from the work practice standards, the number of deviations, and, for each deviation, the information in paragraphs (a)(7)(xiii)(A) and (B) of this section:

(A) A description of the deviation; the date, time, and duration of the deviation; and the actions you took to minimize emissions in accordance with § 63.3500(b).

(B) The description required in paragraph (a)(7)(xiii)(A) of this section must include a list of the affected sources or equipment for which a deviation occurred and the cause of the deviation (including unknown cause, if applicable.

(xiv) Before August 24, 2020, a statement of the cause of each deviation. On and after August 24, 2020, for deviations from an emission limit in § 63.3490 or an operating limit in Table 4 to this subpart, a statement of the cause of each deviation (including unknown cause, if applicable) and the actions you took to minimize emissions in accordance with § 63.3500(b).

(xv) On and after August 24, 2020, for each deviation from an emission limit in § 63.3490 or operating limit in Table 4 to this subpart, a list of the affected sources or equipment for which a deviation occurred, an estimate of the quantity of each regulated pollutant emitted over any emission limit in § 63.3490 or operating limit in Table 4 to this subpart, and a description of the method used to estimate the emissions.

(8) *Deviations: control efficiency/outlet concentration option*. If you used the control efficiency/outlet concentration option, and there was a deviation from the applicable emission limit in § 63.3490 or the applicable operating limit(s) in Table 4 to this subpart (including any periods when emissions bypassed the add-on control device and were diverted to the atmosphere), before August 24, 2020, the semiannual compliance report must contain the information in paragraphs (a)(8)(i) through (xii) of this section. This includes periods of startup, shutdown, and malfunction during which deviations occurred. On and after August 24, 2020, the semiannual compliance report must specify the number of deviations during the compliance period and contain the information in paragraphs (a)(8)(i) through (x), (xii), and (xiii) of this section. If you use the control efficiency/outlet concentration option and there was a deviation from the applicable work practice standards in § 63.3493(b), the semiannual compliance report must contain the information in paragraph (a)(8)(xi) of this section.

(i) The date and time that each malfunction of the capture system or add-on control devices started and stopped.

(ii) A brief description of the CPMS.

(iii) The date of the latest certification or audit of the CPMS.

(iv) Before August 24, 2020, the date and time that each CPMS was inoperative, except for zero (low-level) and high-level checks. On and after August 24, 2020, for each instance that the CPMS was inoperative, except for zero (low-level) and high-level checks, the date, time, and duration that the CPMS was inoperative; the cause (including unknown cause) for the CPMS being inoperative; and the actions you took to minimize emissions in accordance with § 63.3500(b).

(v) For each instance that the CPMS was out of control as specified in § 63.8(c)(7), the date, time, and duration that the CPMS was out of control; the cause (including unknown cause) for the CPMS being out of control; and the actions you took to minimize emissions in accordance with § 63.3500(b).

(vi) Before August 24, 2020, the date and time period of each deviation from an operating limit in Table 4 to this subpart; date and time of any bypass of the add-on control device; and whether each deviation occurred during a period of startup, shutdown, or malfunction or during another period. On and after August 24, 2020, the date, time, and duration of each deviation from an operating limit in Table 4 to this subpart; and the date, time, and duration of any bypass of the add-on control device.

(vii) A summary of the total duration of each deviation from an operating

sfrattini on LAPJZKW1R2 with $$_JOB
VerDate Sep<11>2014 09:16 Apr 04, 2023 Jkt 256165 PO 00000 Frm 00690 Fmt 8010 Sfmt 8010 Q:\40\256165.XXX PC31

limit in Table 4 to this subpart and each bypass of the add-on control device during the semiannual reporting period and the total duration as a percent of the total source operating time during that semiannual reporting period.

(viii) Before August 24, 2020, a breakdown of the total duration of the deviations from the operating limits in Table 4 to this subpart and bypasses of the add-on control device during the semiannual reporting period into those that were due to startup, shutdown, control equipment problems, process problems, other known causes, and other unknown causes. On and after August 24, 2020, a breakdown of the total duration of the deviations from the operating limits in Table 4 to this subpart and bypasses of the add-on control device during the semiannual reporting period into those that were due to control equipment problems, process problems, other known causes, and other unknown causes.

(ix) A summary of the total duration of CPMS downtime during the semiannual reporting period and the total duration of CPMS downtime as a percent of the total source operating time during that semiannual reporting period.

(x) A description of any changes in the CPMS, coating operation, emission capture system, or add-on control device since the last semiannual reporting period.

(xi) Before August 24, 2020, for each deviation from the work practice standards, a description of the deviation; the date and time period of the deviation; and the actions you took to correct the deviation. On and after August 24, 2020, for deviations from the work practice standards in §63.3493(b), the number of deviations, and, for each deviation, the information in paragraphs (a)(8)(xiii)(A) and (B) of this section:

(A) A description of the deviation; the date, time, and duration of the deviation; and the actions you took to minimize emissions in accordance with §63.3500(b).

(B) The description required in paragraph (a)(8)(xi)(A) of this section must include a list of the affected sources or equipment for which a deviation occurred and the cause of the deviation (including unknown cause, if applicable).

(xii) Before August 24, 2020, a statement of the cause of each deviation. On and after August 24, 2020, for deviations from an emission limit in §63.3490 or operating limit in Table 4 to this subpart, a statement of the cause of each deviation (including unknown cause, if applicable).

(xiii) On and after August 24, 2020, for each deviation from an emission limit in §63.3490 or operating limit in Table 4 to this subpart, a list of the affected sources or equipment for which a deviation occurred, an estimate of the quantity of each regulated pollutant emitted over any emission limit in §63.3490, and a description of the method used to estimate the emissions.

(b) *Performance test reports.* If you use the emission rate with add-on controls option or the control efficiency/outlet concentration option, you must submit reports of performance test results for emission capture systems and add-on control devices no later than 60 days after completing the tests as specified in §63.10(d)(2).

(c) *Startup, shutdown, malfunction reports.* Before August 24, 2020, if you used the emission rate with add-on controls option or the control efficiency/outlet concentration option and you had a startup, shutdown, or malfunction during the semiannual reporting period, you must submit the reports specified in paragraphs (c)(1) and (2) of this section. On and after August 24, 2020, the reports specified in paragraphs (c)(1) and (2) of this section are not required.

(1) If your actions were consistent with your SSMP, you must include the information specified in §63.10(d) in the semiannual compliance report required by paragraph (a) of this section.

(2) If your actions were not consistent with your SSMP, you must submit an immediate startup, shutdown, and malfunction report as described in paragraphs (c)(2)(i) and (ii) of this section.

(i) You must describe the actions taken during the event in a report delivered by facsimile, telephone, or other means to the Administrator within 2 working days after starting

sfrattini on LAPJZKW1R2 with $$_JOB
VerDate Sep<11>2014 09:16 Apr 04, 2023 Jkt 256165 PO 00000 Frm 00691 Fmt 8010 Sfmt 8010 Q:\40\256165.XXX PC31

actions that are inconsistent with the SSMP.

(ii) You must submit a letter to the Administrator within 7 working days after the end of the event, unless you have made alternative arrangements with the Administrator as specified in § 63.10(d)(5)(ii). The letter must contain the information specified in § 63.10(d)(5)(ii).

(d) On and after August 24, 2020, you must submit the results of the performance test required in §§ 63.3540 and 63.3550 following the procedure specified in paragraphs (d)(1) through (3) of this section.

(1) For data collected using test methods supported by the EPA's Electronic Reporting Tool (ERT) as listed on the EPA's ERT website (*https://www.epa.gov/electronic-reporting-air-emissions/electronic-reporting-tool-ert*) at the time of the test, you must submit the results of the performance test to the EPA via the Compliance and Emissions Data Reporting Interface (CEDRI). The CEDRI interface can be accessed through the EPA's Central Data Exchange (CDX) (*https://cdx.epa.gov/*). Performance test data must be submitted in a file format generated through the use of the EPA's ERT or an alternate electronic file format consistent with the extensible markup language (XML) schema listed on the EPA's ERT website.

(2) For data collected using test methods that are not supported by the EPA's ERT as listed on the EPA's ERT website at the time of the test, you must submit the results of the performance test in portable document format (PDF) using the attachment module of the ERT.

(3) If you claim that some of the performance test information being submitted under paragraph (d)(1) of this section is confidential business information (CBI), you must submit a complete file generated through the use of the EPA's ERT or an alternate electronic file consistent with the XML schema listed on the EPA's ERT website, including information claimed to be CBI, on a compact disc, flash drive, or other commonly used electronic storage medium to the EPA. The electronic medium must be clearly marked as CBI and mailed to U.S. EPA/OAPQS/CORE CBI Office, Attention: Group Leader, Measurement Policy Group, MD C404–02, 4930 Old Page Rd., Durham, NC 27703. The same ERT or alternate file with the CBI omitted must be submitted to the EPA via the EPA's CDX as described in paragraph (c)(1) of this section.

(e) On and after August 24, 2020, the owner or operator shall submit the initial notifications required in § 63.9(b) and the notification of compliance status required in §§ 63.9(h) and 63.3510(c) to the EPA via the CEDRI. The CEDRI interface can be accessed through the EPA's CDX (*https://cdx.epa.gov*). The owner or operator must upload to CEDRI an electronic copy of each applicable notification in PDF. The applicable notification must be submitted by the deadline specified in this subpart, regardless of the method in which the reports are submitted. Owners or operators who claim that some of the information required to be submitted via CEDRI is CBI shall submit a complete report generated using the appropriate form in CEDRI or an alternate electronic file consistent with the XML schema listed on the EPA's CEDRI website, including information claimed to be CBI, on a compact disc, flash drive, or other commonly used electronic storage medium to the EPA. The electronic medium shall be clearly marked as CBI and mailed to U.S. EPA/OAQPS/CORE CBI Office, Attention: Group Leader, Measurement Policy Group, MD C404–02, 4930 Old Page Rd., Durham, NC 27703. The same file with the CBI omitted shall be submitted to the EPA via the EPA's CDX as described earlier in this paragraph.

(f) On and after March 25, 2021, or once the reporting template has been available on the CEDRI website for 1 year, whichever date is later, the owner or operator shall submit the semiannual compliance report required in paragraph (a) of this section to the EPA via the CEDRI. The CEDRI interface can be accessed through the EPA's CDX (*https://cdx.epa.gov*). The owner or operator must use the appropriate electronic template on the CEDRI website for this subpart (*https://www.epa.gov/electronic-reporting-air-emissions/compliance-and-emissions-data-reporting-interface-cedri*). The date report templates

sfrattini on LAPJZKW1R2 with $$_JOB
VerDate Sep<11>2014 09:16 Apr 04, 2023 Jkt 256165 PO 00000 Frm 00692 Fmt 8010 Sfmt 8010 Q:\40\256165.XXX PC31

become available will be listed on the CEDRI website. If the reporting form for the semiannual compliance report specific to this subpart is not available in CEDRI at the time that the report is due, you must submit the report to the Administrator at the appropriate addresses listed in §63.13. Once the form has been available in CEDRI for 1 year, you must begin submitting all subsequent reports via CEDRI. The reports must be submitted by the deadlines specified in this subpart, regardless of the method in which the reports are submitted. Owners or operators who claim that some of the information required to be submitted via CEDRI is CBI shall submit a complete report generated using the appropriate form in CEDRI, including information claimed to be CBI, on a compact disc, flash drive, or other commonly used electronic storage medium to the EPA. The electronic medium shall be clearly marked as CBI and mailed to U.S. EPA/OAQPS/CORE CBI Office, Attention: Group Leader, Measurement Policy Group, MD C404–02, 4930 Old Page Rd., Durham, NC 27703. The same file with the CBI omitted shall be submitted to the EPA via the EPA's CDX as described earlier in this paragraph.

(g) If you are required to electronically submit a report through the CEDRI in the EPA's CDX, you may assert a claim of the EPA system outage for failure to timely comply with the reporting requirement. To assert a claim of the EPA system outage, you must meet the requirements outlined in paragraphs (g)(1) through (7) of this section.

(1) You must have been or will be precluded from accessing CEDRI and submitting a required report within the time prescribed due to an outage of either the EPA's CEDRI or CDX systems.

(2) The outage must have occurred within the period of time beginning five business days prior to the date that the submission is due.

(3) The outage may be planned or unplanned.

(4) You must submit notification to the Administrator in writing as soon as possible following the date you first knew, or through due diligence should have known, that the event may cause or caused a delay in reporting.

(5) You must provide to the Administrator a written description identifying:

(i) The date(s) and time(s) when CDX or CEDRI was accessed and the system was unavailable;

(ii) A rationale for attributing the delay in reporting beyond the regulatory deadline to the EPA system outage;

(iii) Measures taken or to be taken to minimize the delay in reporting; and

(iv) The date by which you propose to report, or if you have already met the reporting requirement at the time of the notification, the date you reported.

(6) The decision to accept the claim of the EPA system outage and allow an extension to the reporting deadline is solely within the discretion of the Administrator.

(7) In any circumstance, the report must be submitted electronically as soon as possible after the outage is resolved.

(h) If you are required to electronically submit a report through CEDRI in the EPA's CDX, you may assert a claim of force majeure for failure to timely comply with the reporting requirement. To assert a claim of force majeure, you must meet the requirements outlined in paragraphs (h)(1) through (5) of this section.

(1) You may submit a claim if a force majeure event is about to occur, occurs, or has occurred or there are lingering effects from such an event within the period of time beginning five business days prior to the date the submission is due. For the purposes of this section, a force majeure event is defined as an event that will be or has been caused by circumstances beyond the control of the affected facility, its contractors, or any entity controlled by the affected facility that prevents you from complying with the requirement to submit a report electronically within the time period prescribed. Examples of such events are acts of nature (*e.g.*, hurricanes, earthquakes, or floods), acts of war or terrorism, or equipment failure or safety hazard beyond the control of the affected facility (*e.g.*, large scale power outage).

(2) You must submit notification to the Administrator in writing as soon as possible following the date you first

sfrattini on LAPJZKW1R2 with $$_JOB
VerDate Sep<11>2014 09:16 Apr 04, 2023 Jkt 256165 PO 00000 Frm 00693 Fmt 8010 Sfmt 8010 Q:\40\256165.XXX PC31

knew, or through due diligence should have known, that the event may cause or has caused a delay in reporting.

(3) You must provide to the Administrator:

(i) A written description of the force majeure event;

(ii) A rationale for attributing the delay in reporting beyond the regulatory deadline to the force majeure event;

(iii) Measures taken or to be taken to minimize the delay in reporting; and

(iv) The date by which you propose to report, or if you have already met the reporting requirement at the time of the notification, the date you reported.

(4) The decision to accept the claim of force majeure and allow an extension to the reporting deadline is solely within the discretion of the Administrator.

(5) In any circumstance, the reporting must occur as soon as possible after the force majeure event occurs.

[68 FR 64446, Nov. 13, 2003, as amended at 71 FR 1383, Jan. 6, 2006; 85 FR 10847, Feb. 25, 2020]

§ 63.3512 What records must I keep?

You must collect and keep records of the data and information specified in this section. Failure to collect and keep the records is a deviation from the applicable standard.

(a) A copy of each notification and report that you submitted to comply with this subpart and the documentation supporting each notification and report.

(b) A current copy of information provided by materials suppliers or manufacturers, such as manufacturer's formulation data, or test data used to determine the mass fraction of organic HAP and density for each coating and thinner and the volume fraction of coating solids for each coating. If you conducted testing to determine mass fraction of organic HAP, density, or volume fraction of coating solids, you must keep a copy of the complete test report. If you use information provided to you by the manufacturer or supplier of the material that was based on testing, you must keep the summary sheet of results provided to you by the manufacturer or supplier. You are not required to obtain the test report or other supporting documentation from the manufacturer or supplier.

(c) For each compliance period, the records specified in paragraphs (c)(1) through (4) of this section.

(1) A record of the coating operations at which you used each compliance option and the time periods (beginning and ending dates and times) you used each option.

(2) For the compliant material option, a record of the calculation of the organic HAP content for each coating, using Equation 1 of § 63.3521.

(3) For the emission rate without add-on controls option, a record of the calculation of the total mass of organic HAP emissions for the coatings and thinners used each month, using Equations 1, 1A, 1B, and 2 of § 63.3531 and, if applicable, the calculation used to determine mass of organic HAP in waste materials according to § 63.3531(e)(3); the calculation of the total volume of coating solids used each month, using Equation 2 of § 63.3531; and the calculation of each 12-month organic HAP emission rate, using Equation 3 of § 63.3531, or Equation 4 in § 63.3531, if applicable.

(4) For the emission rate with add-on controls option, records of the calculations specified in paragraphs (c)(4)(i) through (vi) of this section.

(i) The calculation of the total mass of organic HAP emissions for the coatings and thinners used each month, using Equations 1, 1A, and 1B of § 63.3531 and, if applicable, the calculation used to determine mass of organic HAP in waste materials according to § 63.3531(e)(3).

(ii) The calculation of the total volume of coating solids used each month, using Equation 2 of § 63.3531.

(iii) The calculation of the mass of organic HAP emission reduction by emission capture systems and add-on control devices, using Equations 1 and 1A through 1C of § 63.3541, and Equations 2, 3, 3A, and 3B of § 63.3541, as applicable.

(iv) The calculation of the total mass of organic HAP emissions each month, using Equation 4 of § 63.3541.

(v) The calculation of each 12-month organic HAP emission rate, using Equation 5 of § 63.3541.

sfrattini on LAPJZKW1R2 with $$_JOB
VerDate Sep<11>2014 09:16 Apr 04, 2023 Jkt 256165 PO 00000 Frm 00694 Fmt 8010 Sfmt 8010 Q:\40\256165.XXX PC31

(vi) The OSEL calculation, if applicable, using Equation 4 of §63.3531.

(5) For the control efficiency/outlet concentration option, records of the measurements made by the CPMS used to demonstrate compliance. For any coating operation(s) for which you use this option, you do not have to keep the records specified in paragraphs (d) through (g) of this section.

(d) A record of the name and volume of each coating and thinner used during each compliance period.

(e) A record of the mass fraction of organic HAP for each coating and thinner used during each compliance period.

(f) A record of the volume fraction of coating solids for each coating used during each compliance period.

(g) A record of the density for each coating used during each compliance period; and, if you use either the emission rate without add-on controls or the emission rate with add-on controls compliance option, the density for each thinner used during each compliance period.

(h) If you use an allowance in Equation 1 of §63.3531 for organic HAP contained in waste materials sent to or designated for shipment to a treatment, storage, and disposal facility (TSDF) according to §63.3531(e)(3) or otherwise managed in accordance with applicable Federal and State waste management regulations, you must keep records of the information specified in paragraphs (h)(1) through (3) of this section.

(1) The name and address of each TSDF or other applicable waste management location to which you sent waste materials for which you use an allowance in Equation 1 of §63.3531, a statement of which subparts under 40 CFR parts 262, 264, 265, and 266 apply to the facility and the date of each shipment.

(2) Identification of the coating operations producing waste materials included in each shipment and the month or months in which you used the allowance for these materials in Equation 1 of §63.3531.

(3) The methodology used in accordance with §63.3531(e)(3) to determine the total amount of waste materials sent to or the amount collected, stored, and designated for transport to a TSDF or other applicable waste management location each month and the methodology to determine the mass of organic HAP contained in these waste materials. That must include the sources for all data used in the determination, methods used to generate the data, frequency of testing or monitoring, and supporting calculations and documentation, including the waste manifest for each shipment.

(i) Before August 24, 2020, a record of the date, time, and duration of each deviation. On and after August 24, 2020, for each deviation from an emission limitation reported under §63.3511(a)(5) through (8), a record of the information specified in paragraphs (i)(1) through (4) of this section, as applicable.

(1) The date, time, and duration of the deviation, as reported under §63.3511(a)(5) through (8).

(2) A list of the affected sources or equipment for which the deviation occurred and the cause of the deviation, as reported under §63.3511(a)(5) through (8).

(3) An estimate of the quantity of each regulated pollutant emitted over any applicable emission limit in §63.3490 or any applicable operating limit in Table 4 to this subpart, and a description of the method used to calculate the estimate, as reported under §63.3511(a)(5) through (8).

(4) A record of actions taken to minimize emissions in accordance with §63.3500(b) and any corrective actions taken to return the affected unit to its normal or usual manner of operation.

(j) If you use the emission rate with add-on controls option or the control efficiency/outlet concentration option, you must also keep the records specified in paragraphs (j)(1) through (8) of this section.

(1) Before August 24, 2020, for each deviation, a record of whether the deviation occurred during a period of startup, shutdown, or malfunction. On and after August 24, 2020, a record of whether the deviation occurred during a period of startup, shutdown, or malfunction is not required.

(2) Before August 24, 2020, the records in §63.6(e)(3)(iii) through (v) related to startup, shutdown, and malfunction. On and after August 24, 2020, the

sfrattini on LAPJZKW1R2 with $$_JOB
VerDate Sep<11>2014 09:16 Apr 04, 2023 Jkt 256165 PO 00000 Frm 00695 Fmt 8010 Sfmt 8010 Q:\40\256165.XXX PC31

records in § 63.6(e)(3)(iii) through (v) related to startup, shutdown, and malfunction are not required.

(3) The records required to show continuous compliance with each operating limit specified in Table 4 to this subpart that applies to you.

(4) For each capture system that is a PTE, the data and documentation you used to support a determination that the capture system meets the criteria in Method 204 of appendix M to 40 CFR part 51 for a PTE and has a capture efficiency of 100 percent, as specified in § 63.3544(a).

(5) For each capture system that is not a PTE, the data and documentation you used to determine capture efficiency according to the requirements specified in §§ 63.3543 and 63.3544(b) through (e) including the records specified in paragraphs (j)(5)(i) through (iii) of this section that apply to you.

(i) *Records for a liquid-to-uncaptured-gas protocol using a temporary total enclosure or building enclosure.* Records of the mass of total volatile hydrocarbon (TVH) as measured by Method 204A or F of appendix M to 40 CFR part 51 for each material used in the coating operation and the total TVH for all materials used during each capture efficiency test run including a copy of the test report. Records of the mass of TVH emissions not captured by the capture system that exited the temporary total enclosure (TTE) or building enclosure during each capture efficiency test run, as measured by Method 204D or E of appendix M to 40 CFR part 51, including a copy of the test report. Records documenting that the enclosure used for the capture efficiency test met the criteria in Method 204 of appendix M to 40 CFR part 51 for either a TTE or a building enclosure.

(ii) *Records for a gas-to-gas protocol using a temporary total enclosure or a building enclosure.* Records of the mass of TVH emissions captured by the emission capture system as measured by Method 204B or C of appendix M to 40 CFR part 51 at the inlet to the add-on control device including a copy of the test report. Records of the mass of TVH emissions not captured by the capture system that exited the TTE or building enclosure during each capture efficiency test run as measured by Method 204D or E of appendix M to 40 CFR part 51 including a copy of the test report. Records documenting that the enclosure used for the capture efficiency test met the criteria in Method 204 of appendix M to 40 CFR part 51 for either a TTE or a building enclosure.

(iii) *Records for an alternative protocol.* Records needed to document a capture efficiency determination using an alternative method or protocol as specified in § 63.3544(e) if applicable.

(6) The records specified in paragraphs (j)(6)(i) and (ii) of this section for each add-on control device organic HAP destruction or removal efficiency determination as specified in § 63.3545 or § 63.3555.

(i) Records of each add-on control device performance test conducted according to § 63.3543 or §§ 63.3553 and 63.3545 or § 63.3555.

(ii) Records of the coating operation conditions during the add-on control device performance test showing that the performance test was conducted under representative operating conditions.

(7) Records of the data and calculations you used to establish the emission capture and add-on control device operating limits as specified in § 63.3546 or § 63.3556 and to document compliance with the operating limits as specified in Table 4 to this subpart.

(8) A record of the work practice plan required by § 63.3493 and documentation that you are implementing the plan on a continuous basis.

[68 FR 64446, Nov. 13, 2003, as amended at 71 FR 1383, Jan. 6, 2006; 85 FR 10850, Feb. 25, 2020]

§ 63.3513 In what form and for how long must I keep my records?

(a) Your records must be kept in a form suitable and readily available for expeditious review, according to § 63.10(b)(1). Where appropriate, the records may be maintained as electronic spreadsheets or as a database. On and after August 24, 2020, any records required to be maintained by this subpart that are in reports that were submitted electronically via the EPA's CEDRI may be maintained in electronic format. This ability to maintain electronic copies does not affect the requirement for facilities to

sfrattini on LAPJZKW1R2 with $$_JOB
VerDate Sep<11>2014 09:16 Apr 04, 2023 Jkt 256165 PO 00000 Frm 00696 Fmt 8010 Sfmt 8010 Q:\40\256165.XXX PC31

make records, data, and reports available upon request to a delegated air agency or the EPA as part of an on-site compliance evaluation.

(b) As specified in § 63.10(b)(1), you must keep each record for 5 years following the date of each occurrence, measurement, maintenance, corrective action, report, or record.

(c) You must keep each record on site for at least 2 years after the date of each occurrence, measurement, maintenance, corrective action, report, or record, according to § 63.10(b)(1). You may keep the records off site for the remaining 3 years.

[68 FR 64446, Nov. 13, 2003, as amended at 85 FR 10851, Feb. 25, 2020]

COMPLIANCE REQUIREMENTS FOR THE COMPLIANT MATERIAL OPTION

§ 63.3520 By what date must I conduct the initial compliance demonstration?

You must complete the initial compliance demonstration for the initial compliance period according to the requirements in § 63.3521. The initial compliance period begins on the applicable compliance date specified in § 63.3483 and ends on the last day of the 12th month following the compliance date. If the compliance date occurs on any day other than the first day of a month, then the initial compliance period extends through the end of that month plus the next 12 months. The initial compliance demonstration includes the calculations according to § 63.3521 and supporting documentation showing that, during the initial compliance period, you used no coating with an organic HAP content that exceeded the applicable emission limit in § 63.3490 and you used no thinners that contained organic HAP.

§ 63.3521 How do I demonstrate initial compliance with the emission limitations?

You may use the compliant material option for any individual coating operation, for any group of coating operations within a subcategory or coating type segment, or for all the coating operations within a subcategory or coating type segment. You must use either the emission rate without add-on controls option, the emission rate with add-on controls option, or the control efficiency/outlet concentration option for any coating operation in the affected source for which you do not use that option. To demonstrate initial compliance using the compliant material option, the coating operation or group of coating operations must use no coating with an organic HAP content that exceeds the applicable emission limit in § 63.3490 and must use no thinner that contains organic HAP as determined according to this section. Any coating operation for which you use the compliant material option is not required to meet the operating limits or work practice standards required in §§ 63.3492 and 63.3493, respectively. You must conduct a separate initial compliance demonstration for each one and two-piece draw and iron can body coating, sheetcoating, three-piece can body assembly coating, and end coating affected source. You must meet all the requirements of this section for the coating operation or group of coating operations using this option. Use the procedures in this section on each coating and thinner in the condition it is in when it is received from its manufacturer or supplier and prior to any alteration (*e.g.*, mixing or thinning). Do not include any coatings or thinners used on coating operations for which you use the emission rate without add-on controls option, the emission rate with add-on controls option, or the control efficiency/outlet concentration option. You do not need to redetermine the HAP content of coatings or thinners that have been reclaimed onsite and reused in the coating operation(s) for which you use the compliant material option, provided these materials in their condition as received were demonstrated to comply with the compliant material option. All required calculations and compliance demonstrations may be performed with either metric or English units.

(a) *Determine the mass fraction of organic HAP for each material used.* You must determine the mass fraction of organic HAP for each coating and thinner used during the compliance period by using one of the options in paragraphs (a)(1) through (5) of this section.

sfrattini on LAPJZKW1R2 with $$_JOB
VerDate Sep<11>2014 09:16 Apr 04, 2023 Jkt 256165 PO 00000 Frm 00697 Fmt 8010 Sfmt 8010 Q:\40\256165.XXX PC31

(1) *Method 311 (appendix A to 40 CFR part 63).* You may use Method 311 for determining the mass fraction of organic HAP. Use the procedures specified in paragraphs (a)(1)(i) and (ii) of this section when performing a Method 311 test.

(i) Count each organic HAP in Table 8 to this subpart that is measured to be present at 0.1 percent by mass or more and at 1.0 percent by mass or more for other compounds. For example, if toluene (not listed in Table 8 to this subpart) is measured to be 0.5 percent of the material by mass, you do not have to count it. Express the mass fraction of each organic HAP you count as a value truncated to four places after the decimal point (*e.g.*, 0.3791).

(ii) Calculate the total mass fraction of organic HAP in the test material by adding up the individual organic HAP mass fractions and truncating the result to three places after the decimal point (*e.g.*, 0.763).

(2) *Method 24 (appendix A to 40 CFR part 60).* For coatings, you may use Method 24 to determine the mass fraction of nonaqueous volatile matter and use that value as a substitute for mass fraction of organic HAP. As an alternative to using Method 24, you may use ASTM D2369–10 (2015), ''Test Method for Volatile Content of Coatings'' (incorporated by reference, see § 63.14).

(3) *Alternative method.* You may use an alternative test method for determining the mass fraction of organic HAP once the Administrator has approved it. You must follow the procedure in § 63.7(f) to submit an alternative test method for approval.

(4) *Information from the supplier or manufacturer of the material.* You may rely on information other than that generated by the test methods specified in paragraphs (a)(1) through (3) of this section, such as manufacturer's formulation data, if it represents each organic HAP in Table 8 to this subpart that is present at 0.1 percent by mass or more and at 1.0 percent by mass or more for other compounds. For example, if toluene (not listed in Table 8 to this subpart) is 0.5 percent of the material by mass, you do not have to count it. If there is a disagreement between such information and results of a test conducted according to paragraphs (a)(1) through (3) of this section, then the test method results will take precedence unless, after consultation, a regulated source can demonstrate to the satisfaction of the enforcement agency that the formulation data are correct.

(5) *Solvent blends.* Solvent blends may be listed as single components for some materials in data provided by manufacturers or suppliers. Solvent blends may contain organic HAP which must be counted toward the total organic HAP mass fraction of the materials. When test data and manufacturer's data for solvent blends are not available, you may use the default values for the mass fraction of organic HAP in those solvent blends listed in Table 6 or 7 to this subpart. If you use the tables, you must use the values in Table 6 to this subpart for all solvent blends that match Table 6 entries, and you may only use Table 7 to this subpart if the solvent blends in the materials you use do not match any of the solvent blends in Table 6 and you only know whether the blend is aliphatic or aromatic. However, if the results of a Method 311 (40 CFR part 63, appendix A) test indicate higher values than those listed on Table 6 or 7 to this subpart, the Method 311 results will take precedence.

(b) *Determine the volume fraction of coating solids for each coating.* You must determine the volume fraction of coating solids (liters of coating solids per liter of coating) for each coating used during the compliance period by a test or by information provided by the supplier or the manufacturer of the material as specified in paragraphs (b)(1) and (2) of this section. If test results obtained according to paragraph (b)(1) of this section do not agree with the information obtained under paragraph (b)(2) of this section, the test results will take precedence.

(1) *ASTM Method D2697–03 (2014) or D6093–97 (2016).* You may use ASTM D2697–*03* (2014), ''Standard Test Method for Volume Nonvolatile Matter in Clear or Pigmented Coatings,'' (incorporated by reference, *see* § 63.14) or ASTM D6093–97 (2016), ''Standard Test Method for Percent Volume Nonvolatile Matter in Clear or Pigmented Coatings Using a Helium Gas Pycnometer'' (incorporated by reference, *see*

sfrattini on LAPJZKW1R2 with $$_JOB
VerDate Sep<11>2014 09:16 Apr 04, 2023 Jkt 256165 PO 00000 Frm 00698 Fmt 8010 Sfmt 8010 Q:\40\256165.XXX PC31

§63.14), to determine the volume fraction of coating solids for each coating. Divide the nonvolatile volume percent obtained with the methods by 100 to calculate volume fraction of coating solids. If these values cannot be determined using these methods, the owner/operator may submit an alternative technique for determining the values for approval by the Administrator.

(2) *Information from the supplier or manufacturer of the material.* You may obtain the volume fraction of coating solids for each coating from the supplier or manufacturer.

(c) *Determine the density of each coating.* Determine the density of each coating used during the compliance period from test results using ASTM Method D1475–13 ''Standard Test Method for Density of Liquid Coatings, Inks, and Related Products'' (incorporated by reference, see §63.14) or information from the supplier or manufacturer of the material. If there is disagreement between ASTM Method D1475–13 test results and the supplier's or manufacturer's information, the test results will take precedence.

(d) *Calculate the organic HAP content of each coating.* Calculate the organic HAP content, kg organic HAP per liter coating solids, of each coating used during the compliance period, using Equation 1 of this section.

$$H_c = \frac{(D_c)(W_c)}{V_s} \qquad \text{(Eq. 1)}$$

Where:

H_c = Organic HAP content of the coating, kg organic HAP per liter coating solids.

D_c = Density of coating, kg coating per liter coating, determined according to paragraph (c) of this section.

W_c = mass fraction of organic HAP in the coating, kg organic HAP per kg coating, determined according to paragraph (a) of this section.

V_s = Volume fraction of coating solids, liter coating solids per liter coating, determined according to paragraph (b) of this section.

(e) *Compliance demonstration.* The organic HAP content for each coating used during the initial compliance period, determined using Equation 1 of this section, must be less than or equal to the applicable emission limit in §63.3490 and each thinner used during the initial compliance period must contain no organic HAP, determined according to paragraph (a) of this section. You must keep all records required by §§63.3512 and 63.3513. As part of the Notification of Compliance Status required in §63.3510, you must identify the coating operation(s) for which you used the compliant material option and submit a statement that the coating operation(s) was (were) in compliance with the emission limitations during the initial compliance period because you used no coatings for which the organic HAP content exceeded the applicable emission limit in §63.3490, and you used no thinners that contained organic HAP, determined according to paragraph (a) of this section.

[68 FR 64446, Nov. 13, 2003, as amended at 71 FR 1383, Jan. 6, 2006; 85 FR 10851, Feb. 25, 2020]

§63.3522 How do I demonstrate continuous compliance with the emission limitations?

(a) For each compliance period, to demonstrate continuous compliance, you must use no coating for which the organic HAP content, determined using Equation 1 of §63.3521, exceeds the applicable emission limit in §63.3490 and use no thinner that contains organic HAP, determined according to §63.3521(a). A compliance period consists of 12 months. Each month after the end of the initial compliance period described in §63.3520 is the end of a compliance period consisting of that month and the preceding 11 months.

(b) If you choose to comply with the emission limitations by using the compliant material option, the use of any coating or thinner that does not meet the criteria specified in paragraph (a) of this section is a deviation from the emission limitations that must be reported as specified in §§63.3510(b)(6) and 63.3511(a)(5).

(c) As part of each semiannual compliance report required by §63.3511, you must identify the coating operation(s) for which you used the compliant material option. If there were no deviations from the emission limitations set forth in §63.3490, submit a statement that the coating operation(s) was (were) in compliance with the emission

sfrattini on LAPJZKW1R2 with $$_JOB
VerDate Sep<11>2014 09:16 Apr 04, 2023 Jkt 256165 PO 00000 Frm 00699 Fmt 8010 Sfmt 8010 Q:\40\256165.XXX PC31
ER13NO03.000<MATH>

limitations during the reporting period because you used no coating for which the organic HAP content exceeded the applicable emission limit in § 63.3490, and you used no thinner that contained organic HAP, as determined according to § 63.3521(a).

(d) You must maintain records as specified in §§ 63.3512 and 63.3513.

[68 FR 64446, Nov. 13, 2003, as amended at 71 FR 1383, Jan. 6, 2006]

COMPLIANCE REQUIREMENTS FOR THE EMISSION RATE WITHOUT ADD-ON CONTROLS OPTION

§ 63.3530 By what date must I conduct the initial compliance demonstration?

You must complete the initial compliance demonstration for the initial compliance period according to the requirements of § 63.3531. The initial compliance period begins on the applicable compliance date specified in § 63.3483 and ends on the last day of the 12th month following the compliance date. If the compliance date occurs on any day other than the first day of a month, then the initial compliance period extends through the end of that month plus the next 12 months. You must determine the mass of organic HAP emissions and volume of coating solids used each month and then calculate a 12-month organic HAP emission rate at the end of the initial 12-month compliance period. The initial compliance demonstration includes the calculations according to § 63.3531 and supporting documentation showing that, during the initial compliance period, the organic HAP emission rate was equal to or less than the applicable emission limit in § 63.3490.

§ 63.3531 How do I demonstrate initial compliance with the emission limitations?

You may use the emission rate without add-on controls option for any coating operation, for any group of coating operations within a subcategory or coating type segment, or for all of the coating operations within a subcategory or coating type segment. You must use either the compliant material option, the emission rate with add-on controls option, or the control efficiency/outlet concentration option for any coating operation in the affected source for which you do not use this option. If you use the alternative overall emission limit for a subcategory according to paragraph (i) of this section to demonstrate compliance, however, you must include all coating operations in all coating type segments in the subcategory to determine compliance with the overall limit. To demonstrate initial compliance using the emission rate without add-on controls option, the coating operation or group of coating operations must meet the applicable emission limit in § 63.3490, but is not required to meet the operating limits or work practice standards in §§ 63.3492 and 63.3493, respectively. You must conduct a separate initial compliance demonstration for each one and two-piece draw and iron can body coating, sheetcoating, three-piece can body assembly coating, and end coating affected source. You must meet all the requirements of this section to demonstrate initial compliance with the applicable emission limit in § 63.3490 for the coating operation(s). When calculating the organic HAP emission rate according to this section, do not include any coatings or thinners used on coating operations for which you use the compliant material option, the emission rate with add-on controls option, or the control efficiency/outlet concentration option or coating operations in a different affected source in a different subcategory. Use the procedures in this section on each coating and thinner in the condition it is in when it is received from its manufacturer or supplier and prior to any alteration (*e.g.*, mixing or thinning). You do not need to redetermine the mass of organic HAP in coatings or thinners that have been reclaimed onsite and reused in the coating operation(s) for which you use the emission rate without add-on controls option. All required calculations and compliance demonstrations may be performed with either metric or English units.

(a) *Determine the mass fraction of organic HAP for each material.* Determine the mass fraction of organic HAP for each coating and thinner used during

sfrattini on LAPJZKW1R2 with $$_JOB
VerDate Sep<11>2014 09:16 Apr 04, 2023 Jkt 256165 PO 00000 Frm 00700 Fmt 8010 Sfmt 8010 Q:\40\256165.XXX PC31

each month according to the requirements in §63.3521(a).

(b) *Determine the volume fraction of coating solids for each coating*. Determine the volume fraction of coating solids for each coating used during each month according to the requirements in §63.3521(b).

(c) *Determine the density of each material*. Determine the density of each coating and thinner used during each month from test results using ASTM D1475–13 or ASTM D2111–10 (2015) (both incorporated by reference, see §63.14), information from the supplier or manufacturer of the material, or reference sources providing density or specific gravity data for pure materials. If there is disagreement between ASTM D1475–13 or ASTM D2111–10 (2015) test results and such other information sources, the test results will take precedence.

(d) *Determine the volume of each material used*. Determine the volume (liters) of each coating and thinner used during each month by measurement or usage records.

(e) *Calculate the mass of organic HAP emissions*. The mass of organic HAP emissions is the combined mass of organic HAP contained in all coatings and thinners used during each month minus the organic HAP in certain waste materials. Calculate it using Equation 1 of this section.

$$H_e = A + B - R_w \qquad \text{(Eq. 1)}$$

Where:

H_e = Total mass of organic HAP emissions during the month, kg.

A = Total mass of organic HAP in the coatings used during the month, kg, as calculated in Equation 1A of this section.

B = Total mass of organic HAP in the thinners used during the month, kg, as calculated in Equation 1B of this section.

R_w = Total mass of organic HAP in waste materials sent or designated for shipment to a hazardous waste TSDF or other applicable waste management location for treatment or disposal during the month, kg, determined according to paragraph (e)(3) of this section. (You may assign a value of zero to R_w if you do not wish to use this allowance.)

(1) Calculate the mass of organic HAP in the coatings used during the month using Equation 1A of this section.

$$A = \sum_{i=1}^{m} \left(Vol_{c,i}\right)\left(D_{c,i}\right)\left(W_{c,i}\right) \qquad \text{(Eq. 1A)}$$

Where:

A = Total mass of organic HAP in the coatings used during the month, kg.

$Vol_{c,i}$ = Total volume of coating, i, used during the month, liters.

$D_{c,i}$ = Density of coating, i, kg coating per liter coating.

$W_{c,i}$ = Mass fraction of organic HAP in coating, i, kg organic HAP per kg coating.

m = Number of different coatings used during the month.

(2) Calculate the mass of organic HAP in the thinners used during the month using Equation 1B of this section.

$$B = \sum_{j=1}^{n} \left(Vol_{t,j}\right)\left(D_{t,j}\right)\left(W_{t,j}\right) \qquad \text{(Eq. 1B)}$$

Where:

B = Total mass of organic HAP in the thinners used during the month, kg.

$Vol_{t,j}$ = Total volume of thinner, j, used during the month, liters.

$D_{t,j}$ = Density of thinner, j, kg per liter.

$W_{t,j}$ = Mass fraction of organic HAP in thinner, j, kg organic HAP per kg thinner.

n = Number of different thinners used during the month.

sfrattini on LAPJZKW1R2 with $$_JOB
VerDate Sep<11>2014 09:16 Apr 04, 2023 Jkt 256165 PO 00000 Frm 00701 Fmt 8010 Sfmt 8010 Q:\40\256165.XXX PC31
ER13NO03.001</MATH> ER13NO03.002</MATH> ER13NO03.003</MATH>

(3) If you choose to account for the mass of organic HAP contained in waste materials sent or designated for shipment to a hazardous waste TSDF or other applicable waste management location in Equation 1 of this section, then you must determine it according to paragraphs (e)(3)(i) through (iv) of this section.

(i) You may include in the determination only waste materials that are generated by coating operations for which you use Equation 1 of this section and that will be treated or disposed of by a facility regulated as a TSDF under 40 CFR part 262, 264, 265, or 266 or otherwise managed in accordance with applicable Federal and State waste management regulations. The TSDF or other applicable waste management location may be either offsite or onsite. You may not include organic HAP contained in wastewater.

(ii) You must determine either the amount of the waste materials sent to a TSDF, or other applicable waste management location, during the month, or the amount collected and stored during the month and designated for future transport to a TSDF or other applicable waste management location. Do not include in your determination any waste materials sent to a TSDF or other applicable waste management location during a month if you have already included them in the amount collected and stored during that month or a previous month.

(iii) Determine the total mass of organic HAP contained in the waste materials specified in paragraph (e)(3)(ii) of this section.

(iv) You must document the methodology you used to determine the amount of waste materials and the total mass of organic HAP they contain as required in § 63.3512(h). To the extent that waste manifests include this information, they may be used as part of the documentation of the amount of waste materials and mass of organic HAP contained in them.

(f) *Calculate the total volume of coating solids used.* Determine the total volume of coating solids used which is the combined volume of coating solids for all the coatings used during each month using Equation 2 of this section.

$$V_{st} = \sum_{i=1}^{m} \left(Vol_{c,i}\right)\left(V_{s,i}\right) \qquad \text{(Eq. 2)}$$

Where:

V_{st} = Total volume of coating solids used during the month, liters.

$Vol_{c,i}$ = Total volume of coating, i, used during the month, liters.

$V_{s,i}$ = Volume fraction of coating solids for coating, i, liter solids per liter coating, determined according to § 63.3521(b).

m = Number of coatings used during the month.

(g) *Calculate the organic HAP emission rate.* Calculate the organic HAP emission rate for the 12-month compliance period, kg organic HAP per liter coating solids used, using Equation 3 of this section.

$$H_{yr} = \frac{\sum_{y=1}^{12} H_e}{\sum_{y=1}^{12} V_{st}} \qquad \text{(Eq. 3)}$$

Where:

H_{yr} = Organic HAP emission rate for the 12-month compliance period, kg organic HAP per liter coating solids.

H_e = Total mass of organic HAP emissions, kg, from all materials used during month, y, as calculated by Equation 1 of this section.

V_{st} = Total volume of coating solids, liters, used during month, y, as calculated by Equation 2 of this section.

y = Identifier for months.

(h) *Compliance demonstration.* The organic HAP emission rate for the initial 12-month compliance period, H_{yr}, must be less than or equal to the applicable emission limit in § 63.3490. You must keep all records as required by §§ 63.3512 and 63.3513. As part of the Notification of Compliance Status required by § 63.3510, you must identify the coating operation(s) for which you used the emission rate without add-on controls option and submit a statement that the coating operation(s) was (were) in compliance with the emission limitations during the initial compliance period because the organic HAP emission rate was less than or equal to the applicable emission limit in § 63.3490, determined according to this section.

sfrattini on LAPJZKW1R2 with $$_JOB
VerDate Sep<11>2014 09:16 Apr 04, 2023 Jkt 256165 PO 00000 Frm 00702 Fmt 8010 Sfmt 8010 Q:\40\256165.XXX PC31
ER13NO03.004<.MATH> ER13NO03.005<.MATH>

(i) *Alternative calculation of overall subcategory emission limit (OSEL).* Alternatively, if your affected source applies coatings in more than one coating type segment within a subcategory, you may calculate an overall HAP emission limit for the subcategory using Equation 4 of this section. If you use this approach, you must limit organic HAP emissions to the atmosphere to the OSEL specified by Equation 4 of this section during each 12-month compliance period.

$$OSEL = \frac{\sum_{i=1}^{n} L_i(V_i)}{\sum_{i=1}^{n} V_i} \qquad \text{(Eq. 4)}$$

Where:

OSEL = Total allowable organic HAP in kg HAP/liter coating solids (pound (lb) HAP/gal solids) that can be emitted to the atmosphere from all coating type segments in the subcategory.

L_i = HAP emission limit for coating type segment i from Table 1 for a new or reconstructed source or Table 2 for an existing source, kg HAP/liter coating solids (lb HAP/gal solids).

V_i = Total volume of coating solids in liters (gal) for all coatings in coating type segment i used during the 12-month compliance period.

n = Number of coating type segments within one subcategory being used at the affected source.

You must use the OSEL determined by Equation 4 of this section throughout the 12-month compliance period and may not switch between compliance with individual coating type limits and an OSEL. You may not include coatings in different subcategories in determining your OSEL by this approach. You must keep all records as required by §§ 63.3512 and 63.3513. As part of the Notification of Compliance Status required by § 63.3510, you must identify the subcategory for which you used a calculated OSEL and submit a statement that the coating operation(s) was (were) in compliance with the emission limitations during the initial compliance period because the organic HAP emission rate for the subcategory was less than or equal to the OSEL determined according to this section.

[68 FR 64446, Nov. 13, 2003, as amended at 71 FR 1384, Jan. 6, 2006; 85 FR 10851, Feb. 25, 2020]

§ 63.3532 How do I demonstrate continuous compliance with the emission limitations?

(a) To demonstrate continuous compliance, the organic HAP emission rate for each compliance period, determined according to § 63.3531(a) through (g), must be less than or equal to the applicable emission limit in § 63.3490. Alternatively, if you calculate an OSEL for all coating type segments within a subcategory according to § 63.3531(i), the organic HAP emission rate for the subcategory for each compliance period must be less than or equal to the calculated OSEL. You must use the calculated OSEL throughout each compliance period. A compliance period consists of 12 months. Each month after the end of the initial compliance period described in § 63.3530 is the end of a compliance period consisting of that month and the preceding 11 months. You must perform the calculations in § 63.3531(a) through (g) on a monthly basis using data from the previous 12 months of operation.

(b) If the organic HAP emission rate for any 12-month compliance period exceeded the applicable emission limit in § 63.3490 or the OSEL calculated according to § 63.3531(i), this is a deviation from the emission limitations for that compliance period and must be reported as specified in §§ 63.3510(c)(6) and 63.3511(a)(6).

(c) As part of each semiannual compliance report required by § 63.3511, you must identify the coating operation(s) for which you used the emission rate without add-on controls option. If there were no deviations from the emission limitations, you must submit a statement that the coating operation(s) was (were) in compliance with the emission limitations during the reporting period because the organic HAP emission rate for each compliance period was less than or equal to the applicable emission limit in § 63.3490 determined according to § 63.3531(a) through (g), or using the OSEL calculated according to § 63.3531(i).

sfrattini on LAPJZKW1R2 with $$_JOB
VerDate Sep<11>2014 09:16 Apr 04, 2023 Jkt 256165 PO 00000 Frm 00703 Fmt 8010 Sfmt 8010 Q:\40\256165.XXX PC31
ER13NO03.006<MATH>

(d) You must maintain records as specified in §§ 63.3512 and 63.3513.

COMPLIANCE REQUIREMENTS FOR THE EMISSION RATE WITH ADD-ON CONTROLS OPTION

§ 63.3540 By what date must I conduct performance tests and initial compliance demonstrations?

(a) *New and reconstructed affected sources.* For a new or reconstructed affected source, you must meet the requirements of paragraphs (a)(1) through (4) of this section.

(1) All emission capture systems, add-on control devices, and CPMS must be installed and operating no later than the applicable compliance date specified in § 63.3483. Except for solvent recovery systems for which you conduct liquid-liquid material balances according to § 63.3541(i), you must conduct according to the schedule in paragraphs (a)(1)(i) and (ii) of this section initial and periodic performance tests of each capture system and add-on control device according to the procedures in §§ 63.3543, 63.3544, and 63.3545 and establish the operating limits required by § 63.3492. For a solvent recovery system for which you conduct liquid-liquid material balances according to § 63.3541(i), you must initiate the first material balance no later than the applicable compliance date specified in § 63.3483.

(i) You must conduct the initial performance test and establish the operating limits required by § 63.3492 no later than 180 days after the applicable compliance date specified in § 63.3483.

(ii) If you are not required to complete periodic performance tests as a requirement of renewing your facility's operating permit under 40 CFR part 70 or 40 CFR part 71, you must conduct the first periodic performance test before March 25, 2023, unless you already have conducted a performance test on or after March 25, 2018. Thereafter you must conduct a performance test no later than 5 years following the previous performance test. Operating limits must be confirmed or reestablished during each performance test. If you are required to complete periodic performance tests as a requirement of renewing your facility's operating permit under 40 CFR part 70 or 40 CFR part 71, you must conduct the periodic testing in accordance with the terms and schedule required by your permit conditions.

(2) You must develop and begin implementing the work practice plan required by § 63.3493 no later than the compliance date specified in § 63.3483.

(3) You must complete the initial compliance demonstration for the initial compliance period according to the requirements of § 63.3541. The initial compliance period begins on the applicable compliance date specified in § 63.3483 and ends on the last day of the 12th month following the compliance date. If the compliance date occurs on any day other than the first day of a month, then the initial compliance period extends through the end of that month plus the next 12 months. You must determine the mass of organic HAP emissions and volume of coating solids used each month and then calculate a 12-month organic HAP emission rate at the end of the initial 12-month compliance period. The initial compliance demonstration includes the results of emission capture system and add-on control device performance tests conducted according to §§ 63.3543, 63.3544, and 63.3545; results of liquid-liquid material balances conducted according to § 63.3541(i); calculations according to § 63.3541 and supporting documentation showing that, during the initial compliance period, the organic HAP emission rate was equal to or less than the emission limit in § 63.3490(a); the operating limits established during the performance tests and the results of the continuous parameter monitoring required by § 63.3547; and documentation of whether you developed and implemented the work practice plan required by § 63.3493.

(4) For the initial compliance demonstration, you do not need to comply with the operating limits for the emission capture system and add-on control device required by § 63.3492 until after you have completed the initial performance tests specified in paragraph (a)(1) of this section. Instead, you must maintain a log detailing the operation and maintenance of the emission capture system, add-on control device, and continuous parameter monitors during the period between the compliance

sfrattini on LAPJZKW1R2 with $$_JOB
VerDate Sep<11>2014 09:16 Apr 04, 2023 Jkt 256165 PO 00000 Frm 00704 Fmt 8010 Sfmt 8010 Q:\40\256165.XXX PC31

date and the performance test. You must begin complying with the operating limits established based on the initial performance tests specified in paragraph (a)(1) of this section for your affected source on the date you complete the performance tests. The requirements in this paragraph (a)(4) do not apply to solvent recovery systems for which you conduct liquid-liquid material balances according to the requirements in §63.3541(i).

(b) *Existing affected sources.* For an existing affected source, you must meet the requirements of paragraphs (b)(1) through (3) of this section.

(1) All emission capture systems, add-on control devices, and CPMS must be installed and operating no later than the applicable compliance date specified in §63.3483. Except for solvent recovery systems for which you conduct liquid-liquid material balances according to §63.3541(i), you must conduct according to the schedule in paragraphs (b)(1)(i) and (ii) of this section initial and periodic performance tests of each capture system and add-on control device according to the procedures in §§63.3543, 63.3544, and 63.3545 and establish the operating limits required by §63.3492. For a solvent recovery system for which you conduct liquid-liquid material balances according to §63.3541(i), you must initiate the first material balance no later than the compliance date specified in §63.3483.

(i) You must conduct the initial performance test and establish the operating limits required by §63.3492 no later than 180 days after the applicable compliance date specified in §63.3483.

(ii) If you are not required to complete periodic performance tests as a requirement of renewing your facility's operating permit under 40 CFR part 70 or 40 CFR part 71, you must conduct the first periodic performance test before March 25, 2023, unless you already have conducted a performance test on or after March 25, 2018. Thereafter you must conduct a performance test no later than 5 years following the previous performance test. Operating limits must be confirmed or reestablished during each performance test. If you are required to complete periodic performance tests as a requirement of renewing your facility's operating permit under 40 CFR part 70 or 40 CFR part 71, you must conduct the periodic testing in accordance with the terms and schedule required by your permit conditions.

(2) You must develop and begin implementing the work practice plan required by §63.3493 no later than the compliance date specified in §63.3483.

(3) You must complete the initial compliance demonstration for the initial compliance period according to the requirements of §63.3541. The initial compliance period begins on the applicable compliance date specified in §63.3483 and ends on the last day of the 12th month following the compliance date. If the compliance date occurs on any day other than the first day of a month, then the initial compliance period extends through the end of that month plus the next 12 months. You must determine the mass of organic HAP emissions and volume of coating solids used each month and then calculate a 12-month organic HAP emission rate at the end of the initial 12-month compliance period. The initial compliance demonstration includes the results of emission capture system and add-on control device performance tests conducted according to §§63.3543, 63.3544, and 63.3545; results of liquid-liquid material balances conducted according to §63.3541(i); calculations according to §63.3541 and supporting documentation showing that during the initial compliance period the organic HAP emission rate was equal to or less than the emission limit in §63.3490(b); the operating limits established during the performance tests and the results of the continuous parameter monitoring required by §63.3547; and documentation of whether you developed and implemented the work practice plan required by §63.3493.

[68 FR 64446, Nov. 13, 2003, as amended at 85 FR 10851, Feb. 25, 2020]

§63.3541 How do I demonstrate initial compliance?

(a) You may use the emission rate with add-on controls option for any coating operation, for any group of coating operations within a subcategory or coating type segment, or for all of the coating operations within a subcategory or coating type segment.

sfrattini on LAPJZKW1R2 with $$_JOB
VerDate Sep<11>2014 09:16 Apr 04, 2023 Jkt 256165 PO 00000 Frm 00705 Fmt 8010 Sfmt 8010 Q:\40\256165.XXX PC31

You may include both controlled and uncontrolled coating operations in a group for which you use this option. You must use either the compliant material option, the emission rate without add-on controls option, or the control efficiency/outlet concentration option for any coating operation in the affected source for which you do not use the emission rate with add-on controls option. To demonstrate initial compliance, the coating operation(s) for which you use the emission rate with add-on controls option must meet the applicable emission limitations in § 63.3490. You must conduct a separate initial compliance demonstration for each one and two-piece draw and iron can body coating, sheetcoating, three-piece can body assembly coating, and end coating affected source. You must meet all the requirements of this section to demonstrate initial compliance with the emission limitations. When calculating the organic HAP emission rate according to this section, do not include any coatings or thinners used on coating operations for which you use the compliant material option, the emission rate without add-on controls option, or the control efficiency/outlet concentration option. You do not need to redetermine the mass of organic HAP in coatings or thinners that have been reclaimed onsite and reused in the coating operation(s) for which you use the emission rate with add-on controls option. All required calculations and compliance demonstrations may be performed with either metric or English units.

(b) *Compliance with operating limits.* Except as provided in § 63.3540(a)(4) and except for solvent recovery systems for which you conduct liquid-liquid material balances according to the requirements of § 63.3541(i), you must establish and demonstrate continuous compliance during the initial compliance period with the operating limits required by § 63.3492 using the procedures specified in §§ 63.3546 and 63.3547.

(c) *Compliance with work practice requirements.* You must develop, implement, and document your implementation of the work practice plan required by § 63.3493 during the initial compliance period, as specified in § 63.3512.

(d) *Compliance with emission limits.* You must follow the procedures in paragraphs (e) through (n) of this section to demonstrate compliance with the applicable emission limit in § 63.3490.

(e) *Determine the mass fraction of organic HAP, density, volume used, and volume fraction of coating solids.* Follow the procedures specified in § 63.3531(a) through (d) to determine the mass fraction of organic HAP, density, and volume of each coating and thinner used during each month and the volume fraction of coating solids for each coating used during each month.

(f) *Calculate the total mass of organic HAP emissions before add-on controls.* Using Equation 1 of § 63.3531, calculate the total mass of organic HAP emissions before add-on controls from all coatings and thinners used during each month in the coating operation or group of coating operations for which you use the emission rate with add-on controls option.

(g) *Calculate the organic HAP emission reduction for each controlled coating operation.* Determine the mass of organic HAP emissions reduced for each controlled coating operation during each month. The emission reduction determination quantifies the total organic HAP emissions that pass through the emission capture system and are destroyed or removed by the add-on control device. Use the procedures in paragraph (h) of this section to calculate the mass of organic HAP emission reduction for each controlled coating operation using an emission capture system and add-on control device other than a solvent recovery system for which you conduct liquid-liquid material balances. For each controlled coating operation using a solvent recovery system for which you conduct a liquid-liquid material balance, use the procedures in paragraph (j) of this section to calculate the organic HAP emission reduction.

(h) *Calculate the organic HAP emission reduction for each controlled coating operation not using liquid-liquid material balances.* For each controlled coating operation using an emission capture system and add-on control device, other than a solvent recovery system for which you conduct liquid-liquid

sfrattini on LAPJZKW1R2 with $$_JOB
VerDate Sep<11>2014 09:16 Apr 04, 2023 Jkt 256165 PO 00000 Frm 00706 Fmt 8010 Sfmt 8010 Q:\40\256165.XXX PC31

material balances, calculate the organic HAP emission reduction, using Equation 1 of this section. The calculation applies the emission capture system efficiency and add-on control device efficiency to the mass of organic HAP contained in the coatings and thinners that are used in the coating operation served by the emission capture system and add-on control device during each month. For any period of time a deviation specified in §63.3542(c) or (d) occurs in the controlled coating operation, you must assume zero efficiency for the emission capture system and add-on control device, unless you have other data indicating the actual efficiency of the emission capture system and add-on control device, and the use of these data has been approved by the Administrator. Equation 1 of this section treats the materials used during such a deviation as if they were used on an uncontrolled coating operation for the time period of the deviation.

$$H_c = \left(A_c + B_c - H_{unc}\right)\left(\frac{CE}{100} \times \frac{DRE}{100}\right) \qquad \text{(Eq. 1)}$$

Where:

H_c = Mass of organic HAP emission reduction for the controlled coating operation during the month, kg.

A_c = Total mass of organic HAP in the coatings used in the controlled coating operation during the month, kg, as calculated in Equation 1A of this section.

B_c = Total mass of organic HAP in the thinners used in the controlled coating operation during the month, kg, as calculated in Equation 1B of this section.

H_{unc} = Total mass of organic HAP in the coatings and thinners used during all deviations specified in §63.3542(c) and (d) that occurred during the month in the controlled coating operation, kg, as calculated in Equation 1C of this section.

CE = Capture efficiency of the emission capture system vented to the add-on control device, percent. Use the test methods and procedures specified in §§63.3543 and 63.3544 to measure and record capture efficiency.

DRE = Organic HAP destruction or removal efficiency of the add-on control device, percent. Use the test methods and procedures in §§63.3543 and 63.3545 to measure and record the organic HAP destruction or removal efficiency.

(i) *Calculate the organic HAP emission reduction for each controlled coating operation using liquid-liquid material balances.* For each controlled coating operation using a solvent recovery system for which you conduct liquid-liquid material balances, calculate the organic HAP emission reduction by applying the volatile organic matter collection and recovery efficiency to the mass of organic HAP contained in the coatings and thinners that are used in the coating operation controlled by the solvent recovery system during each month. Perform a liquid-liquid material balance for each month as specified in paragraphs (i)(1) through (6) of this section. Calculate the mass of organic HAP emission reduction by the solvent recovery system as specified in paragraph (i)(7) of this section.

(1) For each solvent recovery system, install, calibrate, maintain, and operate according to the manufacturer's specifications, a device that indicates the cumulative amount of volatile organic matter recovered by the solvent recovery system each month.

(2) For each solvent recovery system, determine the mass of volatile organic matter recovered for the month, kg, based on measurement with the device required in paragraph (i)(1) of this section.

(3) Determine the mass fraction of volatile organic matter for each coating and thinner used in the coating operation controlled by the solvent recovery system during the month, in kg volatile organic matter per kg coating. You may determine the volatile organic matter mass fraction using Method 24 of 40 CFR part 60, appendix A, ASTM D2369–10 (2015), ''Test Method for Volatile Content of Coatings'' (incorporated by reference, see §63.14), or an EPA approved alternative method. Alternatively, you may determine the volatile organic matter mass fraction

sfrattini on LAPJZKW1R2 with $$_JOB
VerDate Sep<11>2014 09:16 Apr 04, 2023 Jkt 256165 PO 00000 Frm 00707 Fmt 8010 Sfmt 8010 Q:\40\256165.XXX PC31
ER18NO21.081<GPH>

using information provided by the manufacturer or supplier of the coating. In the event of any inconsistency between information provided by the manufacturer or supplier and the results of Method 24 of 40 CFR part 60, appendix A, ASTM D2369–10 (2015) or an approved alternative method, the test method results will take precedence unless, after consultation, a regulated source can demonstrate to the satisfaction of the enforcement agency that the formulation data are correct.

(4) Determine the density of each coating and thinner used in the coating operation controlled by the solvent recovery system during the month, kg per liter, according to § 63.3531(c).

(5) Measure the volume of each coating and thinner used in the coating operation controlled by the solvent recovery system during the month, liters.

(6) Each month, calculate the solvent recovery system's volatile organic matter collection and recovery efficiency, using Equation 2 of this section.

$$R_V = 100 \frac{M_{VR}}{\sum_{i=1}^{m} (Vol_i)(D_i)(WV_{c,i}) + \sum_{j=1}^{n} (Vol_j)(D_j)(WV_{t,j})} \qquad \text{(Eq. 2)}$$

Where:

R_V = Volatile organic matter collection and recovery efficiency of the solvent recovery system during the month, percent.

M_{VR} = Mass of volatile organic matter recovered by the solvent recovery system during the month, kg.

Vol_i = Volume of coating, i, used in the coating operation controlled by the solvent recovery system during the month, liters.

D_i = Density of coating, i, kg per liter.

$WV_{c,i}$ = Mass fraction of volatile organic matter for coating, i, kg volatile organic matter per kg coating.

Vol_j = Volume of thinner, j, used in the coating operation controlled by the solvent recovery system during the month, liters.

D_j = Density of thinner, j, kg per liter.

$WV_{t,j}$ = Mass fraction of volatile organic matter for thinner, j, kg volatile organic matter per kg thinner.

m = Number of different coatings used in the coating operation controlled by the solvent recovery system during the month.

n = Number of different thinners used in the coating operation controlled by the solvent recovery system during the month.

(7) Calculate the mass of organic HAP emission reduction for the coating operation controlled by the solvent recovery system during the month using Equation 3 of this section.

$$H_{CSR} = (A_{CSR} + B_{CSR})\left(\frac{R_V}{100}\right) \qquad \text{(Eq. 3)}$$

Where:

H_{CSR} = Mass of organic HAP emission reduction for the coating operation controlled by the solvent recovery system using a liquid-liquid material balance during the month, kg.

A_{CSR} = Total mass of organic HAP in the coatings used in the coating operation controlled by the solvent recovery system, kg, calculated using Equation 3A of this section.

B_{CSR} = Total mass of organic HAP in the thinners used in the coating operation controlled by the solvent recovery system, kg, calculated using Equation 3B of this section.

R_V = Volatile organic matter collection and recovery efficiency of the solvent recovery system, percent, from Equation 2 of this section.

sfrattini on LAPJZKW1R2 with $$_JOB
VerDate Sep<11>2014 09:16 Apr 04, 2023 Jkt 256165 PO 00000 Frm 00708 Fmt 8010 Sfmt 8010 Q:\40\256165.XXX PC31
ER13NO03.012<MATH> ER13NO03.013<MATH>

(i) Calculate the mass of organic HAP in the coatings used in the coating operation controlled by the solvent recovery system, kg, using Equation 3A of this section.

$$A_{CSR} = \sum_{i=1}^{m} \left(Vol_{c,i}\right)\left(D_{c,i}\right)\left(W_{c,i}\right) \qquad \text{(Eq. 3A)}$$

Where:

A_{CSR} = Total mass of organic HAP in the coatings used in the coating operation controlled by the solvent recovery system during the month, kg.

$Vol_{c,i}$ = Total volume of coating, i, used during the month in the coating operation controlled by the solvent recovery system, liters.

$D_{c,i}$ = Density of coating, i, kg per liter.

$W_{c,i}$ = Mass fraction of organic HAP in coating, i, kg per kg.

m = Number of different coatings used.

(ii) Calculate the mass of organic HAP in the thinners used in the coating operation controlled by the solvent recovery system using Equation 3B of this section.

$$B_{CSR} = \sum_{j=1}^{n} \left(Vol_{t,j}\right)\left(D_{t,j}\right)\left(W_{t,j}\right) \qquad \text{(Eq. 3B)}$$

Where:

B_{CSR} = Total mass of organic HAP in the thinners used in the coating operation controlled by the solvent recovery system during the month, kg.

$Vol_{t,j}$ = Total volume of thinner, j, used during the month in the coating operation controlled by the solvent recovery system, liters.

$D_{t,j}$ = Density of thinner, j, kg per liter.

$W_{t,j}$ = Mass fraction of organic HAP in thinner, j, kg per kg.

n = Number of different thinners used.

(j) *Calculate the total volume of coating solids used.* Determine the total volume of coating solids used, which is the combined volume of coating solids for all the coatings used during each month in the coating operation or group of coating operations for which you use the emission rate with add-on controls option, using Equation 2 of §63.3531.

(k) *Calculate the mass of organic HAP emissions for each month.* Determine the mass of organic HAP emissions during each month using Equation 4 of this section.

$$H_{HAP} = H_e - \sum_{i=1}^{q} \left(H_{c,i}\right) - \sum_{j=1}^{r} \left(H_{CSR,j}\right) \qquad \text{(Eq. 4)}$$

Where:

H_{HAP} = Total mass of organic HAP emissions for the month, kg.

H_e = Total mass of organic HAP emissions before add-on controls from all the coatings and thinners used during the month, kg, determined according to paragraph (f) of this section.

$H_{C,i}$ = Total mass of organic HAP emission reduction for controlled coating operation, i, not using a liquid-liquid material balance, during the month, kg, from Equation 1 of this section.

$H_{CSR,j}$ = Total mass of organic HAP emission reduction for coating operation, j, controlled by a solvent recovery system using a liquid-liquid material balance, during the month, kg, from Equation 3 of this section.

sfrattini on LAPJZKW1R2 with $$_JOB
VerDate Sep<11>2014 09:16 Apr 04, 2023 Jkt 256165 PO 00000 Frm 00709 Fmt 8010 Sfmt 8010 Q:\40\256165.XXX PC31
ER13NO03.014</MATH> ER13NO03.015</MATH> ER13NO03.016</MATH>

q = Number of controlled coating operations not using a liquid-liquid material balance.

r = Number of coating operations controlled by a solvent recovery system using a liquid-liquid material balance.

(l) *Calculate the organic HAP emission rate for the 12-month compliance period.* Determine the organic HAP emission rate for the 12-month compliance period, kg organic HAP per liter coating solids used, using Equation 5 of this section.

$$H_{annual} = \frac{\sum_{y=1}^{12} H_{HAP,\,y}}{\sum_{y=1}^{12} V_{st,\,y}} \qquad \text{(Eq. 5)}$$

Where:

H_{annual} = Organic HAP emission rate for the 12-month compliance period, kg organic HAP per liter coating solids.

$H_{HAP,y}$ = Organic HAP emission rate for month, y, determined according to Equation 4 of this section.

$V_{st,y}$ = Total volume of coating solids used during month, y, liters, from Equation 2 of § 63.3531.

y = Identifier for months.

(m) *Compliance demonstration.* To demonstrate initial compliance with the emission limit, the organic HAP emission rate, calculated using Equation 5 of this section, must be less than or equal to the applicable emission limit in § 63.3490. You must keep all records as required by §§ 63.3512 and 63.3513. As part of the Notification of Compliance Status required by § 63.3510, you must identify the coating operation(s) for which you used the emission rate with add-on controls option and submit a statement that the coating operation(s) was in compliance with the emission limitations during the initial compliance period because the organic HAP emission rate was less than or equal to the applicable emission limit in § 63.3490, and you achieved the operating limits required by § 63.3492 and the work practice standards required by § 63.3493.

(n) *Alternative calculation of overall subcategory emission limit.* Alternatively, if your affected source applies coatings in more than one coating type segment within a subcategory, you may calculate an overall HAP emission limit for the subcategory using Equation 4 of § 63.3531. If you use this approach, you must limit organic HAP emissions to the atmosphere to the OSEL specified by Equation 4 of § 63.3531 during each 12-month compliance period. You must use the OSEL determined by Equation 4 of § 63.3531 throughout the 12-month compliance period and may not switch between compliance with individual coating type limits and an OSEL. If you follow this approach, you may not include coatings in different subcategories in determining your OSEL. You must keep all records as required by §§ 63.3512 and 63.3513. As part of the Notification of Compliance Status required by § 63.3510, you must identify the subcategory for which you used a calculated OSEL and submit a statement that the coating operation(s) was in compliance with the emission limitations during the initial compliance period because the organic HAP emission rate for the subcategory was less than or equal to the OSEL determined according to this section.

[68 FR 64446, Nov. 13, 2003, as amended at 71 FR 1384, Jan. 6, 2006; 85 FR 10852, Feb. 25, 2020; 86 FR 66041, Nov. 19, 2021]

§ 63.3542 How do I demonstrate continuous compliance with the emission limitations?

(a) To demonstrate continuous compliance with the applicable emission limit in § 63.3490, the organic HAP emission rate for each compliance period, determined according to the procedures in § 63.3541, must be equal to or less than the applicable emission limit in § 63.3490. Alternatively, if you calculate an OSEL for all coating type segments within a subcategory according to § 63.3531(i), the organic HAP emission rate for the subcategory for each compliance period must be less than or equal to the calculated OSEL. You must use the calculated OSEL throughout each compliance period. A compliance period consists of 12 months. Each month after the end of the initial compliance period described in § 63.3540 is the end of a compliance period consisting of that month and the preceding 11 months. You must perform the calculations in § 63.3541 on a

sfrattini on LAPJZKW1R2 with $$_JOB
VerDate Sep<11>2014 09:16 Apr 04, 2023 Jkt 256165 PO 00000 Frm 00710 Fmt 8010 Sfmt 8010 Q:\40\256165.XXX PC31
ER13NO03.017<MATH>

monthly basis using data from the previous 12 months of operation.

(b) If the organic HAP emission rate for any 12-month compliance period exceeded the applicable emission limit in §63.3490, that is a deviation from the emission limitation for that compliance period and must be reported as specified in §§63.3510(b)(6) and 63.3511(a)(7).

(c) You must demonstrate continuous compliance with each operating limit required by §63.3492 that applies to you as specified in Table 4 to this subpart.

(1) If an operating parameter is out of the allowed range specified in Table 4 to this subpart, this is a deviation from the operating limit that must be reported as specified in §§63.3510(b)(6) and 63.3511(a)(7).

(2) If an operating parameter deviates from the operating limit specified in Table 4 to this subpart, then you must assume that the emission capture system and add-on control device were achieving zero efficiency during the time period of the deviation, unless you have other data indicating the actual efficiency of the emission capture system and add-on control device, and the use of these data has been approved by the Administrator. For the purposes of completing the compliance calculations specified in §63.3541(h), you must treat the materials used during a deviation on a controlled coating operation as if they were used on an uncontrolled coating operation for the time period of the deviation as indicated in Equation 1 of §63.3541.

(d) You must meet the requirements for bypass lines in §63.3547(b) for controlled coating operations for which you do not conduct liquid-liquid material balances. If any bypass line is opened and emissions are diverted to the atmosphere when the coating operation is running, this is a deviation that must be reported as specified in §§63.3510(b)(6) and 63.3511(a)(7). For the purposes of completing the compliance calculations specified in §63.3541(h), you must treat the materials used during a deviation on a controlled coating operation as if they were used on an uncontrolled coating operation for the time period of the deviation as indicated in Equation 1 of §63.3541.

(e) You must demonstrate continuous compliance with the work practice standards in §63.3493. If you did not develop a work practice plan or you did not implement the plan or you did not keep the records required by §63.3512(j)(8), that is a deviation from the work practice standards that must be reported as specified in §§63.3510(b)(6) and 63.3511(a)(7).

(f) As part of each semiannual compliance report required in §63.3511, you must identify the coating operation(s) for which you used the emission rate with add-on controls option. If there were no deviations from the emission limits in §63.3490, the operating limits in §63.3492, and the work practice standards in §63.3493, submit a statement that you were in compliance with the emission limitations during the reporting period because the organic HAP emission rate for each compliance period was less than or equal to the applicable emission limit in §63.3490, and you achieved the operating limits required by §63.3492 and the work practice standards required by §63.3493 during each compliance period.

(g) [Reserved]

(h) Before August 24, 2020, consistent with §§63.6(e) and 63.7(e)(1), deviations that occur during a period of startup, shutdown, or malfunction of the emission capture system, add-on control device, or coating operation that may affect emission capture or control device efficiency are not violations if you demonstrate to the Administrator's satisfaction that you were operating in accordance with §63.6(e)(1). The Administrator will determine whether deviations that occur during a period you identify as a startup, shutdown, or malfunction are violations according to the provisions in §63.6(e). On and after August 24, 2020, deviations that occur due to malfunction of the emission capture system, add-on control device, or coating operation that may affect emission capture or control device efficiency are required to operate in accordance with §63.3500(b). The Administrator will determine whether the deviations are violations according to the provisions in §63.3500(b).

sfrattini on LAPJZKW1R2 with $$_JOB
VerDate Sep<11>2014 09:16 Apr 04, 2023 Jkt 256165 PO 00000 Frm 00711 Fmt 8010 Sfmt 8010 Q:\40\256165.XXX PC31

(i) You must maintain records as specified in §§ 63.3512 and 63.3513.

[68 FR 64446, Nov. 13, 2003, as amended at 71 FR 20464, Apr. 20, 2006; 85 FR 10852, Feb. 25, 2020]

§ 63.3543 What are the general requirements for performance tests?

(a) Before August 24, 2020, you must conduct each performance test required by § 63.3540 according to the requirements in § 63.7(e)(1) and under the conditions in this section unless you obtain a waiver of the performance test according to the provisions in § 63.7(h). On and after August 24, 2020, you must conduct each performance test required by § 63.3540 according to the requirements in this section unless you obtain a waiver of the performance test according to the provisions in § 63.7(h).

(1) *Representative coating operation operating conditions.* You must conduct the performance test under representative operating conditions for the coating operation. Operations during periods of startup, shutdown, or nonoperation do not constitute representative conditions for purposes of conducting a performance test. The owner or operator may not conduct performance tests during periods of malfunction. You must record the process information that is necessary to document operating conditions during the test and explain why the conditions represent normal operation. Upon request, you must make available to the Administrator such records as may be necessary to determine the conditions of performance tests.

(2) *Representative emission capture system and add-on control device operating conditions.* You must conduct the performance test when the emission capture system and add-on control device are operating at a representative flow rate and the add-on control device is operating at a representative inlet concentration. You must record information that is necessary to document emission capture system and add-on control device operating conditions during the test and explain why the conditions represent normal operation.

(b) You must conduct each performance test of an emission capture system according to the requirements in § 63.3544. You must conduct each performance test of an add-on control device according to the requirements in § 63.3545.

[68 FR 64446, Nov. 13, 2003, as amended at 85 FR 10853, Feb. 25, 2020]

§ 63.3544 How do I determine the emission capture system efficiency?

You must use the procedures and test methods in this section to determine capture efficiency as part of each performance test required by § 63.3540.

(a) *Assuming 100 percent capture efficiency.* You may assume the capture system efficiency is 100 percent if both of the conditions in paragraphs (a)(1) and (2) of this section are met:

(1) The capture system meets the criteria in Method 204 of appendix M to 40 CFR part 51 for a PTE and directs all the exhaust gases from the enclosure to an add-on control device.

(2) All coatings and thinners used in the coating operation are applied within the capture system, and coating solvent flash-off, curing, and drying occurs within the capture system. For example, the criterion is not met if parts enter the open shop environment when being moved between a spray booth and a curing oven.

(b) *Measuring capture efficiency.* If the capture system does not meet both of the criteria in paragraphs (a)(1) and (2) of this section, then you must use one of the three protocols described in paragraphs (c), (d), and (e) of this section to measure capture efficiency. The capture efficiency measurements use TVH capture efficiency as a surrogate for organic HAP capture efficiency. For the protocols in paragraphs (c) and (d) of this section, the capture efficiency measurement must consist of three test runs. Each test run must be at least 3 hours duration or the length of a production run, whichever is longer, up to 8 hours. For the purposes of this test, a production run means the time required for a single part to go from the beginning to the end of production, and includes drying or curing time, but excludes surface preparation activities.

(c) *Liquid-to-uncaptured-gas protocol using a temporary total enclosure or building enclosure.* The liquid-to-uncaptured-gas protocol compares the mass of liquid TVH in materials used in the coating operation to the mass of

sfrattini on LAPJZKW1R2 with $$_JOB
VerDate Sep<11>2014 09:16 Apr 04, 2023 Jkt 256165 PO 00000 Frm 00712 Fmt 8010 Sfmt 8010 Q:\40\256165.XXX PC31

TVH emissions not captured by the emission capture system. Use a TTE or a building enclosure and the procedures in paragraphs (c)(1) through (6) of this section to measure emission capture system efficiency using the liquid-to-uncaptured-gas protocol.

(1) Either use a building enclosure or construct an enclosure around the coating operation where coatings and thinners are applied and all areas where emissions from these applied coatings and materials subsequently occur, such as flash-off, curing, and drying areas. The areas of the coating operation where capture devices collect emissions for routing to an add-on control device, such as the entrance and exit areas of an oven or spray booth, must also be inside the enclosure. The enclosure must meet the applicable definition of a TTE or building enclosure in Method 204 of appendix M to 40 CFR part 51.

(2) Use Method 204A or 204F of appendix M to 40 CFR part 51 to determine the mass fraction of TVH liquid input from each coating and thinner used in the coating operation during each capture efficiency test run. To make the determination, substitute TVH for each occurrence of the term volatile organic compounds (VOC) in the methods.

(3) Use Equation 1 of this section to calculate the total mass of TVH liquid input from all the coatings and thinners used in the coating operation during each capture efficiency test run.

$$TVH_{used} = \sum_{i=1}^{n} \left(TVH_i\right)\left(Vol_i\right)\left(D_i\right) \qquad \text{(Eq. 1)}$$

Where:

TVH_{used} = Total mass of liquid TVH in materials used in the coating operation during the capture efficiency test run, kg.

TVH_i = Mass fraction of TVH in coating or thinner, i, that is used in the coating operation during the capture efficiency test run, kg TVH per kg material.

Vol_i = Total volume of coating or thinner, i, used in the coating operation during the capture efficiency test run, liters.

D_i = Density of coating or thinner, i, kg material per liter material.

n = Number of different coatings and thinners used in the coating operation during the capture efficiency test run.

(4) Use Method 204D or 204E of appendix M to 40 CFR part 51 to measure the total mass, kg, of TVH emissions that are not captured by the emission capture system; they are measured as they exit the TTE or building enclosure during each capture efficiency test run. To make the measurement, substitute TVH for each occurrence of the term VOC in the methods.

(i) Use Method 204D of appendix M to 40 CFR part 51 if the enclosure is a TTE.

(ii) Use Method 204E of appendix M to 40 CFR part 51 if the enclosure is a building enclosure. During the capture efficiency measurement, all organic compound emitting operations inside the building enclosure other than the coating operation for which capture efficiency is being determined must be shut down but all fans and blowers must be operating normally.

(5) For each capture efficiency test run, determine the percent capture efficiency of the emission capture system using Equation 2 of this section.

$$CE = \frac{\left(TVH_{used} - TVH_{uncaptured}\right)}{TVH_{used}} \times 100 \qquad \text{(Eq. 2)}$$

sfrattini on LAPJZKW1R2 with $$_JOB
VerDate Sep<11>2014 09:16 Apr 04, 2023 Jkt 256165 PO 00000 Frm 00713 Fmt 8010 Sfmt 8006 Q:\40\256165.XXX PC31
ER13NO03.018<.MATH> ER13NO03.019<.MATH>

Where:

CE = Capture efficiency of the emission capture system vented to the add-on control device, percent.

TVH_{used} = Total mass of liquid TVH used in the coating operation during the capture efficiency test run, kg.

$TVH_{uncaptured}$ = Total mass of TVH that is not captured by the emission capture system and that exits from the TTE or building enclosure during the capture efficiency test run, kg, determined according to paragraph (c)(4) of this section.

(6) Determine the capture efficiency of the emission capture system as the average of the capture efficiencies measured in the three test runs.

(d) *Gas-to-gas protocol using a temporary total enclosure or a building enclosure.* The gas-to-gas protocol compares the mass of TVH emissions captured by the emission capture system to the mass of TVH emissions not captured. Use a TTE or a building enclosure and the procedures in paragraphs (d)(1) through (5) of this section to measure emission capture system efficiency using the gas-to-gas protocol.

(1) Either use a building enclosure or construct an enclosure around the coating operation where coatings and thinners are applied and all areas where emissions from these applied coatings and materials subsequently occur, such as flash-off, curing, and drying areas. The areas of the coating operation where capture devices collect emissions generated by the coating operation for routing to an add-on control device, such as the entrance and exit areas of an oven or a spray booth, must also be inside the enclosure. The enclosure must meet the applicable definition of a TTE or building enclosure in Method 204 of appendix M to 40 CFR part 51.

(2) Use Method 204B or 204C of appendix M to 40 CFR part 51 to measure the total mass, kg, of TVH emissions captured by the emission capture system during each capture efficiency test run as measured at the inlet to the add-on control device. To make the measurement, substitute TVH for each occurrence of the term VOC in the methods.

(i) The sampling points for Method 204B or 204C of appendix M to 40 CFR part 51 measurement must be upstream from the add-on control device and must represent total emissions routed from the capture system and entering the add-on control device.

(ii) If multiple emission streams from the capture system enter the add-on control device without a single common duct, then the emissions entering the add-on control device must be simultaneously measured in each duct, and the total emissions entering the add-on control device must be determined.

(3) Use Method 204D or 204E of appendix M to 40 CFR part 51 to measure the total mass, kg, of TVH emissions that are not captured by the emission capture system; they are measured as they exit the TTE or building enclosure during each capture efficiency test run. To make the measurement, substitute TVH for each occurrence of the term VOC in the methods.

(i) Use Method 204D of appendix M to 40 CFR part 51 if the enclosure is a TTE.

(ii) Use Method 204E of appendix M to 40 CFR part 51 if the enclosure is a building enclosure. During the capture efficiency measurement, all organic compound emitting operations inside the building enclosure, other than the coating operation for which capture efficiency is being determined, must be shut down but all fans and blowers must be operating normally.

(4) For each capture efficiency test run, determine the percent capture efficiency of the emission capture system using Equation 3 of this section.

$$CE = \frac{TVH_{captured}}{\left(TVH_{captured} + TVH_{uncaptured}\right)} \times 100 \qquad \text{(Eq. 3)}$$

sfrattini on LAPJZKW1R2 with $$_JOB
VerDate Sep<11>2014 09:16 Apr 04, 2023 Jkt 256165 PO 00000 Frm 00714 Fmt 8010 Sfmt 8006 Q:\40\256165.XXX PC31
ER13NO03.020<.MATH>

Where:

CE = Capture efficiency of the emission capture system vented to the add-on control device, percent.

$TVH_{captured}$ = Total mass of TVH captured by the emission capture system as measured at the inlet to the add-on control device during the emission capture efficiency test run, kg, determined according to paragraph (d)(2) of this section.

$TVH_{uncaptured}$ = Total mass of TVH that is not captured by the emission capture system and that exits from the TTE or building enclosure during the capture efficiency test run, kg, determined according to paragraph (d)(3) of this section.

(5) Determine the capture efficiency of the emission capture system as the average of the capture efficiencies measured in the three test runs.

(e) *Alternative capture efficiency protocol.* As an alternative to the procedures specified in paragraphs (c) and (d) of this section, you may determine capture efficiency using any other capture efficiency protocol and test methods that satisfy the criteria of either the DQO or LCL approach as described in appendix A to subpart KK of this part.

[68 FR 64446, Nov. 13, 2003, as amended at 71 FR 1384, Jan. 6, 2006; 85 FR 10853, Feb. 25, 2020]

§ 63.3545 How do I determine the add-on control device emission destruction or removal efficiency?

You must use the procedures and test methods in this section to determine the add-on control device emission destruction or removal efficiency as part of the performance tests required by § 63.3540. For each performance test, you must conduct three test runs as specified in § 63.7(e)(3) and each test run must last at least 1 hour.

(a) For all types of add-on control devices, use the test methods specified in paragraphs (a)(1) through (5) of this section.

(1) Use Method 1 or 1A of appendix A to 40 CFR part 60, as appropriate, to select sampling sites and velocity traverse points.

(2) Use Method 2, 2A, 2C, 2D, 2F, or 2G of appendix A to 40 CFR part 60, as appropriate, to measure gas volumetric flow rate.

(3) Use Method 3, 3A, or 3B of appendix A to 40 CFR part 60, as appropriate, for gas analysis to determine dry molecular weight. You may also use as an alternative to Method 3B the manual method for measuring the oxygen, carbon dioxide, and carbon monoxide content of exhaust gas in ANSI/ASME PTC 19.10–1981, ''Flue and Exhaust Gas Analyses [Part 10, Instruments and Apparatus]'' (incorporated by reference, see § 63.14).

(4) Use Method 4 of appendix A to 40 CFR part 60 to determine stack gas moisture.

(5) Methods for determining gas volumetric flow rate, dry molecular weight, and stack gas moisture must be performed, as applicable, during each test run.

(b) Measure total gaseous organic mass emissions as carbon at the inlet and outlet of the add-on control device simultaneously using either Method 25 or 25A of appendix A–7 to 40 CFR part 60 as specified in paragraphs (b)(1) through (5) of this section. You must use the same method for both the inlet and outlet measurements.

(1) Use Method 25 of appendix A–7 to 40 CFR part 60 if the add-on control device is an oxidizer and you expect the total gaseous organic concentration as carbon to be more than 50 ppm at the control device outlet.

(2) Use Method 25A of appendix A–7 to 40 CFR part 60 if the add-on control device is an oxidizer and you expect the total gaseous organic concentration as carbon to be 50 ppm or less at the control device outlet.

(3) Use Method 25A of appendix A–7 to 40 CFR part 60 if the add-control device is not an oxidizer.

(4) You may use Method 18 of appendix A–6 to 40 CFR part 60 to subtract methane emissions from measured total gaseous organic mass emissions as carbon.

(5) Alternatively, any other test method or data that have been validated according to the applicable procedures in Method 301 of 40 CFR part 63, appendix A, and approved by the Administrator, may be used.

(c) If two or more add-on control devices are used for the same emission stream, then you must measure emissions at the outlet of each device. For example, if one add-on control device is a concentrator with an outlet for the

sfrattini on LAPJZKW1R2 with $$_JOB
VerDate Sep<11>2014 09:16 Apr 04, 2023 Jkt 256165 PO 00000 Frm 00715 Fmt 8010 Sfmt 8010 Q:\40\256165.XXX PC31

high-volume dilute stream that has been treated by the concentrator, and a second add-on control device is an oxidizer with an outlet for the low-volume concentrated stream that is treated with the oxidizer, you must measure emissions at the outlet of the oxidizer and the high-volume dilute stream outlet of the concentrator.

(d) For each test run, determine the total gaseous organic emissions mass flow rates for the inlet and the outlet of the add-on control device using Equation 1 of this section. If there is more than one inlet or outlet to the add-on control device, you must calculate the total gaseous organic mass flow rate using Equation 1 of this section for each inlet and each outlet and then total all of the inlet emissions and total all of the outlet emissions.

$$M_f = Q_{sd} C_c (12)(0.0416)\left(10^{-6}\right) \qquad \text{(Eq. 1)}$$

Where:

M_f = Total gaseous organic emissions mass flow rate, kg per hour (kg/h).

C_c = Concentration of organic compounds as carbon in the vent gas, as determined by Method 25 or Method 25A, ppmvd.

Q_{sd} = Volumetric flow rate of gases entering or exiting the add-on control device, as determined by Method 2, 2A, 2C, 2D, 2F, or 2G, dry standard cubic meters/hour (dscm/h).

0.0416 = Conversion factor for molar volume, kg-moles per cubic meter (mol/m^3) (@ 293 Kelvin (K) and 760 millimeters of mercury (mmHg)).

NOTE: If M_f is calculated in English units (lb/h), the conversion factor for molar volume is 0.00256 lb-moles per cubic foot (mol/ft^3).

(e) For each test run, determine the add-on control device organic emissions destruction or removal efficiency, using Equation 2 of this section.

$$DRE = 100 \times \frac{M_{fi} - M_{fo}}{M_{fi}} \qquad \text{(Eq. 2)}$$

Where:

DRE = Organic emissions destruction or removal efficiency of the add-on control device, percent.

M_{fi} = Total gaseous organic emissions mass flow rate at the inlet(s) to the add-on control device, using Equation 1 of this section, kg/h.

M_{fo} = Total gaseous organic emissions mass flow rate at the outlet(s) of the add-on control device, using Equation 1 of this section, kg/h.

(f) Determine the emission destruction or removal efficiency of the add-on control device as the average of the efficiencies determined in the three test runs and calculated in Equation 2 of this section.

[68 FR 64446, Nov. 13, 2003, as amended at 85 FR 10853, Feb. 25, 2020]

§ 63.3546 How do I establish the emission capture system and add-on control device operating limits during the performance test?

During performance tests required by § 63.3540 and described in §§ 63.3543, 63.3544, and 63.3545, you must establish the operating limits required by § 63.3492 unless you have received approval for alternative monitoring and operating limits under § 63.8(f) as specified in § 63.3492.

(a) *Thermal oxidizers.* If your add-on control device is a thermal oxidizer, establish the operating limits according to paragraphs (a)(1) and (2) of this section.

(1) During performance tests, you must monitor and record the combustion temperature at least once every 15 minutes during each of the three test runs. You must monitor the temperature in the firebox of the thermal oxidizer or immediately downstream of the firebox before any substantial heat exchange occurs.

(2) For each performance test, use the data collected during the performance test to calculate and record the average combustion temperature maintained during the performance test. That average combustion temperature is the minimum operating limit for your thermal oxidizer.

sfrattini on LAPJZKW1R2 with $$_JOB
VerDate Sep<11>2014 09:16 Apr 04, 2023 Jkt 256165 PO 00000 Frm 00716 Fmt 8010 Sfmt 8010 Q:\40\256165.XXX PC31
ER13NO03.021 <MATH> ER13NO03.022 <MATH>

(b) *Catalytic oxidizers.* If your add-on control device is a catalytic oxidizer, establish the operating limits according to either paragraphs (b)(1) and (2) or paragraphs (b)(3) and (4) of this section.

(1) During performance tests, you must monitor and record the temperature at the inlet to the catalyst bed and the temperature difference across the catalyst bed at least once every 15 minutes during each of the three test runs.

(2) For each performance test, use the data collected during the performance test to calculate and record the average temperature at the inlet to the catalyst bed and the average temperature difference across the catalyst bed maintained during the performance test. The average temperature difference is the minimum operating limit for your catalytic oxidizer.

(3) As an alternative to monitoring the temperature difference across the catalyst bed, you may monitor the temperature at the inlet to the catalyst bed and implement a site-specific inspection and maintenance plan for your catalytic oxidizer as specified in paragraph (b)(4) of this section. During performance tests, you must monitor and record the temperature at the inlet to the catalyst bed at least once every 15 minutes during each of the three test runs. For each performance test, use the data collected during the performance test to calculate and record the average temperature at the inlet to the catalyst bed during the performance test. That is the minimum operating limit for your catalytic oxidizer.

(4) You must develop and implement an inspection and maintenance plan for your catalytic oxidizer(s) for which you elect to monitor according to paragraph (b)(3) of this section. The plan must address, at a minimum, the elements specified in paragraphs (b)(4)(i) through (iii) of this section.

(i) Annual sampling and analysis of the catalyst activity (*i.e,* conversion efficiency) following the manufacturer's or catalyst supplier's recommended procedures.

(ii) Monthly inspection of the oxidizer system, including the burner assembly and fuel supply lines for problems and, as necessary, adjust the equipment to assure proper air-to-fuel mixtures.

(iii) Annual internal and monthly external visual inspection of the catalyst bed to check for channeling, abrasion, and settling. If problems are found, you must take corrective action consistent with the manufacturer's recommendations and conduct a new performance test to determine destruction efficiency according to § 63.3545.

(c) *Regenerative oxidizers.* If your add-on control device is a regenerative oxidizer, establish operating limits according to paragraphs (c)(1) and (2) of this section.

(1) You must establish all applicable operating limits according to paragraphs (a) and (b) of this section.

(2) You must submit a valve inspection plan that documents the steps taken to minimize the amount of leakage during the regenerative process. This plan can include, but is not limited to, routine inspection of key parameters of the valve operating system (*e.g.*, solenoid valve operation, air pressure, hydraulic pressure); visual inspection of the valves during internal inspections; and/or actual testing of the emission stream for leakage.

(d) *Carbon adsorbers.* If your add-on control device is a carbon adsorber, establish the operating limits according to paragraphs (d)(1) and (2) of this section.

(1) During performance tests, you must monitor and record the total regeneration desorbing gas (*e.g.*, steam or nitrogen) mass flow for each regeneration cycle, and the carbon bed temperature after each carbon bed regeneration and cooling cycle for the regeneration cycle either immediately preceding or immediately following the performance test.

(2) The operating limits for your carbon adsorber are the minimum total desorbing gas mass flow recorded during the regeneration cycle, and the maximum carbon bed temperature recorded after the cooling cycle.

(e) *Condensers.* If your add-on control device is a condenser, establish the operating limits according to paragraphs (e)(1) and (2) of this section.

(1) During performance tests, monitor and record the condenser outlet (product side) gas temperature at least

sfrattini on LAPJZKW1R2 with $$_JOB
VerDate Sep<11>2014 09:16 Apr 04, 2023 Jkt 256165 PO 00000 Frm 00717 Fmt 8010 Sfmt 8010 Q:\40\256165.XXX PC31

once every 15 minutes during each of the three test runs of the performance test.

(2) For each performance test, use the data collected during the performance test to calculate and record the average condenser outlet (product side) gas temperature maintained during the performance test. This average condenser outlet gas temperature is the maximum operating limit for your condenser.

(f) *Concentrators.* If your add-on control device includes a concentrator, you must establish operating limits for the concentrator according to paragraphs (f)(1) through (7) of this section.

(1) During performance tests, monitor and record the inlet temperature to the desorption/reactivation zone of the concentrator at least once every 15 minutes during each of the three runs of the performance test.

(2) For each performance test, use the data collected during the performance test to calculate and record the average temperature. This is the minimum operating limit for the desorption/reactivation zone inlet temperature.

(3) During each performance test, monitor and record an indicator(s) of performance for the desorption/reactivation fan operation at least once every 15 minutes during each of the three runs of the performance test. The indicator can be speed in revolutions per minute (rpm), power in amps, static pressure, or flow rate.

(4) Establish a suitable range for the parameter(s) selected based on the system design specifications, historical data, and/or data obtained concurrent with an emissions performance test. This is the operation limit range for the desorption/reactivation fan operation.

(5) During each performance test, monitor the rotational speed of the concentrator at least once every 15 minutes during each of the three runs of the performance test.

(6) For each performance test, use the data collected during the performance test to calculate and record the average rotational speed. This is the minimum operating limit for the rotational speed of the concentrator. However, the indicator range for the rotational speed may be changed if an engineering evaluation is conducted and a determination made that the change in speed will not affect compliance with the emission limit.

(7) Develop and implement an inspection and maintenance plan for the concentrator(s) that you elect to monitor according to paragraph (f) of this section. The plan must include, at a minimum, annual sampling and analysis of the absorbent material (*i.e.*, adsorbent activity) following the manufacturer's recommended procedures.

(g) *Emission capture systems.* For each capture device that is not part of a PTE that meets the criteria of § 63.3544(a), establish an operating limit for either the gas volumetric flow rate or duct static pressure, as specified in paragraphs (g)(1) and (2) of this section. The operating limit for a PTE is specified in Table 4 to this subpart.

(1) During the capture efficiency determination required by § 63.3540 and described in §§ 63.3543 and 63.3544, you must monitor and record either the gas volumetric flow rate at a location upstream of the control device, or the duct static pressure at a location upstream of the primary fan in each duct of each capture device or upstream of the fan that is common to multiple capture devices at least once every 15 minutes during each of the three test runs.

(2) Calculate and record the average gas volumetric flow rate or duct static pressure for the three test runs for each capture device or system of multiple capture devices. The average gas volumetric flow rate is the minimum operating limit for that specific capture device or system of multiple capture devices. The average duct static pressure is the maximum operating limit for that specific capture device or system of multiple capture devices.

[68 FR 64446, Nov. 13, 2003, as amended at 71 FR 1384, Jan. 6, 2006; 85 FR 10853, Feb. 25, 2020]

§ 63.3547 What are the requirements for continuous parameter monitoring system installation, operation, and maintenance?

(a) *General.* You must install, operate, and maintain each CPMS specified in paragraphs (c), (e), and (f) of this

sfrattini on LAPJZKW1R2 with $$_JOB
VerDate Sep<11>2014 09:16 Apr 04, 2023 Jkt 256165 PO 00000 Frm 00718 Fmt 8010 Sfmt 8010 Q:\40\256165.XXX PC31

section according to paragraphs (a) (1) through (6) of this section. You must install, operate, and maintain each CPMS specified in paragraphs (b) and (d) of this section according to paragraphs (a)(3) through (5) of this section.

(1) The CPMS must complete a minimum of one cycle of operation for each successive 15-minute period.

(2) You must determine the average of all recorded readings for each successive 3-hour period of the emission capture system and add-on control device operation.

(3) You must record the results of each inspection, calibration, and validation check of the CPMS.

(4) Before August 24, 2020, you must maintain the CPMS at all times and have available necessary parts for routine repairs of the monitoring equipment. On and after August 24, 2020, you must maintain the CPMS at all times in accordance with § 63.3500(b) and keep necessary parts readily available for routine repairs of the monitoring equipment.

(5) Before August 24, 2020, you must operate the CPMS and collect emission capture system and add-on control device parameter data at all times that a controlled coating operation is operating, except during monitoring malfunctions, associated repairs, and required quality assurance or control activities (including, if applicable, calibration checks and required zero and span adjustments). On and after August 24, 2020, you must operate the CPMS and collect emission capture system and add-on control device parameter data at all times in accordance with § 63.3500(b).

(6) You must not use emission capture system or add-on control device parameter data recorded during monitoring malfunctions, associated repairs, out of control periods, or required quality assurance or control activities when calculating data averages. You must use all the data collected during all other periods in calculating the data averages for determining compliance with the emission capture system and add-on control device operating limits.

(7) A monitoring malfunction is any sudden, infrequent, not reasonably preventable failure of the CPMS to provide valid data. Monitoring failures that are caused, in part, by poor maintenance or careless operation are not malfunctions. Before August 24, 2020, any period for which the monitoring system is out of control and data are not available for required calculations is a deviation from the monitoring requirements. On and after August 24, 2020, except for periods of required quality assurance or control activities, any period for which the CPMS fails to operate and record data continuously as required by paragraph (a)(5) of this section, or generates data that cannot be included in calculating averages as specified in (a)(6) of this section constitutes a deviation from the monitoring requirements.

(b) *Capture system bypass line.* You must meet the requirements of paragraph (b)(1) or (2) of this section for each emission capture system that contains bypass lines that could divert emissions away from the add-on control device to the atmosphere.

(1) Properly install, maintain, and operate a flow indicator that takes a reading at least once every 15 minutes. The flow indicator shall be installed at the entrance to any bypass line. Alternatively, install, maintain, and operate a bypass line valve indicator or damper indicator that indicates valve position.

(2) Secure the bypass line valve in the nondiverting position with a car-seal or a lock-and-key type configuration. A visual inspection of the seal or closure mechanism shall be performed at least once every month to ensure the valve is maintained in the nondiverting position and the vent stream is not diverted through the bypass line.

(c) *Thermal oxidizers and catalytic oxidizers.* If you are using a thermal oxidizer or catalytic oxidizer as an add-on control device (including those used with concentrators or with carbon adsorbers to treat desorbed concentrate streams), you must comply with the requirements in paragraphs (c)(1) through (3) of this section.

(1) For a thermal oxidizer, install a gas temperature monitor in the firebox of the thermal oxidizer or in the duct immediately downstream of the firebox before any substantial heat exchange occurs.

sfrattini on LAPJZKW1R2 with $$_JOB
VerDate Sep<11>2014 09:16 Apr 04, 2023 Jkt 256165 PO 00000 Frm 00719 Fmt 8010 Sfmt 8010 Q:\40\256165.XXX PC31

(2) For a catalytic oxidizer, install a gas temperature monitor according to paragraph (c)(2)(i) or (ii) of this section.

(i) If you establish operating limits according to § 63.3546(b)(1) and (2), then you must install the gas temperature monitors both upstream and downstream of the catalyst bed. The temperature monitors must be in the gas stream at the inlet to and the outlet of the catalyst bed to measure the temperature difference across the bed.

(ii) If you establish operating limits according to § 63.3546(b)(3) and (4), then you must install a gas temperature monitor upstream of the catalyst bed. The temperature monitor must be in the gas stream at the inlet to the catalyst bed to measure the temperature.

(3) For all thermal oxidizers and catalytic oxidizers, you must meet the requirements in paragraphs (a) and (c)(3)(i) through (ii) of this section for each gas temperature monitoring device. For the purposes of this paragraph (c)(3), a thermocouple is part of the temperature sensor.

(i) Locate the temperature sensor in a position that provides a representative temperature.

(ii) Use a temperature sensor with a minimum accuracy of ±1.2 degrees Celsius or ±1 percent of the temperature value in degrees Celsius, whichever is larger.

(d) *Carbon adsorbers.* If you are using a carbon adsorber as an add-on control device, you must monitor the total regeneration desorbing gas (*e.g.*, steam or nitrogen) mass flow for each regeneration cycle, the carbon bed temperature after each regeneration and cooling cycle, and comply with paragraphs (a)(3) through (5) and (d)(1) and (2) of this section.

(1) The regeneration desorbing gas mass flow monitor must be an integrating device having an accuracy of ±10 percent capable of recording the total regeneration desorbing gas mass flow for each regeneration cycle.

(2) The carbon bed temperature monitor must have a minimum accuracy of ±1.2 degrees Celsius or ±1 percent of the temperature value in degrees Celsius, whichever is larger, and must be capable of recording the temperature within 15 minutes of completing any carbon bed cooling cycle.

(e) *Condensers.* If you are using a condenser, you must monitor the condenser outlet (product side) gas temperature and comply with paragraphs (a) and (e)(1) and (2) of this section.

(1) The gas temperature monitor must have a minimum accuracy of ±1 percent of the temperature recorded in degrees Celsius or ±1.2 degrees Celsius, whichever is greater.

(2) The temperature monitor must provide a continuous gas temperature record.

(f) *Concentrators.* If you are using a concentrator such as a zeolite wheel or rotary carbon bed concentrator, you must comply with the requirements in paragraphs (f)(1) through (4) of this section.

(1) You must install a temperature monitor at the inlet to the desorption/reactivation zone of the concentrator. The temperature monitor must meet the requirements in paragraphs (a) and (c)(3) of this section.

(2) You must select an indicator(s) of performance of the desorption/reactivation fan operation, such as speed, power, static pressure, or flow rate.

(3) You must monitor the rotational speed of the concentrator in revolutions per hour.

(4) You must verify the performance of the adsorbent material by examining representative samples and testing adsorbent activity per the manufacturer's recommendations.

[68 FR 64446, Nov. 13, 2003, as amended at 71 FR 1384, Jan. 6, 2006; 85 FR 10854, Feb. 25, 2020]

COMPLIANCE REQUIREMENTS FOR THE CONTROL EFFICIENCY/OUTLET CONCENTRATION OPTION

§ 63.3550 By what date must I conduct performance tests and initial compliance demonstrations?

(a) *New and reconstructed affected sources.* For a new or reconstructed source, you must meet the requirements of paragraphs (a)(1) through (4) of this section.

(1) All emission capture systems, add-on control devices, and CPMS must be installed and operating no later than the applicable compliance date

sfrattini on LAPJZKW1R2 with $$_JOB
VerDate Sep<11>2014 09:16 Apr 04, 2023 Jkt 256165 PO 00000 Frm 00720 Fmt 8010 Sfmt 8010 Q:\40\256165.XXX PC31

specified in §63.3483. You must conduct according to the schedule in paragraphs (a)(1)(i) and (ii) of this section initial and periodic performance tests of each capture system and add-on control device according to §§63.3553, 63.3554, and 63.3555 and establish the operating limits required by §63.3492.

(i) You must conduct the initial performance test and establish the operating limits required by §63.3492 no later than 180 days after the applicable compliance date specified in §63.3483.

(ii) If you are not required to complete periodic performance tests as a requirement of renewing your facility's operating permit under 40 CFR part 70 or 40 CFR part 71, you must conduct the first periodic performance test before March 25, 2023, unless you already have conducted a performance test on or after March 25, 2018. Thereafter you must conduct a performance test no later than 5 years following the previous performance test. Operating limits must be confirmed or reestablished during each performance test. If you are required to complete periodic performance tests as a requirement of renewing your facility's operating permit under 40 CFR part 70 or 40 CFR part 71, you must conduct the periodic testing in accordance with the terms and schedule required by your permit conditions.

(2) You must develop and begin implementing the work practice plan required by §63.3493 no later than the compliance date specified in §63.3483.

(3) You must complete the initial compliance demonstration for the initial compliance period according to the requirements of §63.3551. The initial compliance period begins on the applicable compliance date specified in §63.3483 and ends on the last day of the 12th month following the compliance date. If the compliance date occurs on any day other than the first day of a month, then the initial compliance period extends through the end of that month plus the next 12 months. The initial compliance demonstration includes the results of emission capture system and add-on control device performance tests conducted according to §63.3553, 63.3554, and 63.3555; the operating limits established during the performance tests and the results of the continuous parameter monitoring required by §63.3557; and documentation of whether you developed and implemented the work practice plan required by §63.3493.

(4) For the initial compliance demonstration, you do not need to comply with the operating limits for the emission capture system and add-on control device required by §63.3492 until after you have completed the initial performance tests specified in paragraph (a)(1) of this section. Instead, you must maintain a log detailing the operation and maintenance of the emission capture system, add-on control device, and continuous parameter monitors during the period between the compliance date and the performance test. You must begin complying with the operating limits established based on the initial performance tests specified in paragraph (a)(1) of this section on the date you complete the performance tests.

(b) *Existing affected sources*. For an existing affected source, you must meet the requirements of paragraphs (b)(1) through (3) of this section.

(1) All emission capture systems, add-on control devices, and CPMS must be installed and operating no later than the applicable compliance date specified in §63.3483. Except for solvent recovery systems for which you conduct liquid-liquid material balances according to §63.3541(i), you must conduct according to the schedule in paragraphs (a)(1)(i) and (ii) of this section initial and periodic performance tests of each capture system and add-on control device according to the procedures in §§63.3543, 63.3544, and 63.3545 and establish the operating limits required by §63.3492.

(i) You must conduct the initial performance test and establish the operating limits required by §63.3492 no later than 180 days after the applicable compliance date specified in §63.3483.

(ii) If you are not required to complete periodic performance tests as a requirement of renewing your facility's operating permit under 40 CFR part 70 or 40 CFR part 71, you must conduct the first periodic performance test before March 25, 2023, unless you already have conducted a performance test on or after March 25, 2018. Thereafter you

sfrattini on LAPJZKW1R2 with $$_JOB
VerDate Sep<11>2014 09:16 Apr 04, 2023 Jkt 256165 PO 00000 Frm 00721 Fmt 8010 Sfmt 8010 Q:\40\256165.XXX PC31

must conduct a performance test no later than 5 years following the previous performance test. Operating limits must be confirmed or reestablished during each performance test. If you are required to complete periodic performance tests as a requirement of renewing your facility's operating permit under 40 CFR part 70 or 40 CFR part 71, you must conduct the periodic testing in accordance with the terms and schedule required by your permit conditions.

(2) You must develop and begin implementing the work practice plan required by § 63.3493 no later than the compliance date specified in § 63.3483.

(3) You must complete the initial compliance demonstration for the initial compliance period according to the requirements of § 63.3551. The initial compliance period begins on the applicable compliance date specified in § 63.3483 and ends on the last day of the 12th month following the compliance date. If the compliance date occurs on any day other than the first day of a month, then the initial compliance period extends through the end of that month plus the next 12 months. The initial compliance demonstration includes the results of emission capture system and add-on control device performance tests conducted according to §§ 63.3553, 63.3554, and 63.3555; the operating limits established during the performance tests and the results of the continuous parameter monitoring required by § 63.3557; and documentation of whether you developed and implemented the work practice plan required by § 63.3493.

[68 FR 64446, Nov. 13, 2003, as amended at 85 FR 10854, Feb. 25, 2020]

§ 63.3551 How do I demonstrate initial compliance?

(a) You may use the control efficiency/outlet concentration option for any coating operation, for any group of coating operations within a subcategory or coating type segment, or for all of the coating operations within a subcategory or coating type segment. You must use the compliant material option, the emission rate without add-on controls option, or the emission rate with add-on controls option for any coating operation in the affected source for which you do not use the control efficiency/outlet concentration option. To demonstrate initial compliance, the coating operation(s) for which you use the control efficiency/outlet concentration option must meet the applicable levels of emission reduction in § 63.3490. You must conduct a separate initial compliance demonstration for each one and two-piece draw and iron can body coating, sheetcoating, three-piece can body assembly coating, and end coating affected source. You must meet all the requirements of this section to demonstrate initial compliance with the emission limitations. When calculating the organic HAP emission rate according to this section, do not include any coatings or thinners used on coating operations for which you use the compliant material option, the emission rate without add-on controls option, or the emission rate with add-on controls option. You do not need to redetermine the mass of organic HAP in coatings or thinners that have been reclaimed onsite and reused in the coating operation(s) for which you use the emission rate with add-on controls option.

(b) *Compliance with operating limits.* You must establish and demonstrate continuous compliance during the initial compliance period with the operating limits required by § 63.3492, using the procedures specified in §§ 63.3556 and 63.3557.

(c) *Compliance with work practice requirements.* You must develop, implement, and document your implementation of the work practice plan required by § 63.3493 during the initial compliance period as specified in § 63.3512.

(d) *Compliance demonstration.* To demonstrate initial compliance, the coating operation(s) for which you use the control efficiency/outlet concentration option must meet the applicable levels of emission reduction in § 63.3490. You must keep all records applicable to the control efficiency/outlet concentration option as required by §§ 63.3512 and 63.3513. As part of the Notification of Compliance Status required by § 63.3510, you must identify the coating operation(s) for which you used the control efficiency/outlet concentration option and submit a statement that the coating operation(s) was in compliance

sfrattini on LAPJZKW1R2 with $$_JOB
VerDate Sep<11>2014 09:16 Apr 04, 2023 Jkt 256165 PO 00000 Frm 00722 Fmt 8010 Sfmt 8010 Q:\40\256165.XXX PC31

with the emission limitations during the initial compliance period because you achieved the operating limits required by § 63.3492 and the work practice standards required by § 63.3493.

§ 63.3552 How do I demonstrate continuous compliance with the emission limitations?

(a) To demonstrate continuous compliance with the emission limitations using the control efficiency/outlet concentration option, the organic HAP emission rate for each compliance period must be equal to or less than 20 ppmvd or must be reduced by the amounts specified in § 63.3490. A compliance period consists of 12 months. Each month after the end of the initial compliance period described in § 63.3550 is the end of a compliance period consisting of that month and the preceding 11 months.

(b) You must demonstrate continuous compliance with each operating limit required by § 63.3492 that applies to you, as specified in Table 4 to this subpart. If an operating parameter is out of the allowed range specified in Table 4 to this subpart, this is a deviation from the operating limit that must be reported as specified in §§ 63.3510(b)(6) and 63.3511(a)(7).

(c) You must meet the requirements for bypass lines in § 63.3557(b). If any bypass line is opened and emissions are diverted to the atmosphere when the coating operation is running, this is a deviation that must be reported as specified in §§ 63.3510(b)(6) and 63.3511(a)(7). For purposes of demonstrating compliance, you must treat the materials used during a deviation on a controlled coating operation as if they were used on an uncontrolled coating operation for the time period of the deviation.

(d) You must demonstrate continuous compliance with the work practice standards in § 63.3493. If you did not develop a work practice plan or you did not implement the plan or you did not keep the records required by § 63.3512(j)(8), this is a deviation from the work practice standards that must be reported as specified in §§ 63.3510(b)(6) and 63.3511(a)(7).

(e) As part of each semiannual compliance report required in § 63.3511, you must identify the coating operation(s) for which you used the control efficiency/outlet concentration option. If there were no deviations from the operating limits or work practice standards, submit a statement that you were in compliance with the emission limitations during the reporting period because the organic HAP emission rate for each compliance period was less than 20 ppmvd or was reduced by the amount specified in § 63.3490, and you achieved the operating limits required by § 63.3492 and the work practice standards required by § 63.3493 during each compliance period.

(f) [Reserved]

(g) Before August 24, 2020, consistent with §§ 63.6(e) and 63.7(e)(1), deviations that occur during a period of startup, shutdown, or malfunction of the emission capture system, add-on control device, or coating operation that may affect emission capture or control device efficiency are not violations if you demonstrate to the Administrator's satisfaction that you were operating in accordance with § 63.6(e)(1). The Administrator will determine whether deviations that occur during a period you identify as a startup, shutdown, or malfunction are violations, according to the provisions in § 63.6(e). On and after August 24, 2020 deviations that occur due to malfunction of the emission capture system, add-on control device, or coating operation that may affect emission capture or control device efficiency are required to operate in accordance with § 63.3500(b). The Administrator will determine whether the deviations are violations according to the provisions in § 63.3500(b).

(h) You must maintain records applicable to the control efficiency/outlet concentration option as specified in §§ 63.3512 and 63.3513.

[68 FR 64446, Nov. 13, 2003, as amended at 71 FR 20464, Apr. 20, 2006; 85 FR 10855, Feb. 25, 2020]

§ 63.3553 What are the general requirements for performance tests?

(a) Before August 24, 2020, you must conduct each performance test required by § 63.3550 according to the requirements in § 63.7(e)(1) and under the conditions in this section unless you obtain a waiver of the performance test

sfrattini on LAPJZKW1R2 with $$_JOB
VerDate Sep<11>2014 09:16 Apr 04, 2023 Jkt 256165 PO 00000 Frm 00723 Fmt 8010 Sfmt 8010 Q:\40\256165.XXX PC31

according to the provisions in § 63.7(h). On and after August 24, 2020, you must conduct each performance test required by § 63.3550 according to the requirements in this section unless you obtain a waiver of the performance test according to the provisions in § 63.7(h).

(1) *Representative coating operating conditions.* You must conduct the performance test under representative operating conditions for the coating operation(s). Operations during periods of startup, shutdown, or nonoperation do not constitute representative conditions for purposes of conducting a performance test. The owner or operator may not conduct performance tests during periods of malfunction. You must record the process information that is necessary to document operating conditions during the test and explain why the conditions represent normal operation. Upon request, you must make available to the Administrator such records as may be necessary to determine the conditions of performance tests.

(2) *Representative emission capture system and add-on control device operating conditions.* You must conduct the performance test when the emission capture system and add-on control device are operating at a representative flow rate, and the add-on control device is operating at a representative inlet concentration. You must record information that is necessary to document emission capture system and add-on control device operating conditions during the test and explain why the conditions represent normal operation.

(b) You must conduct each performance test of an emission capture system according to the requirements in § 63.3554. You must conduct each performance test of an add-on control device according to the requirements in § 63.3555.

[68 FR 64446, Nov. 13, 2003, as amended at 85 FR 10855, Feb. 25, 2020]

§ 63.3554 How do I determine the emission capture system efficiency?

The capture efficiency of your emission capture system must be 100 percent to use the control efficiency/outlet concentration option. You may assume the capture system efficiency is 100 percent if both of the conditions in paragraphs (a) and (b) of this section are met.

(a) The capture system meets the criteria in Method 204 of appendix M to 40 CFR part 51 for a PTE and directs all the exhaust gases from the enclosure to an add-on control device.

(b) All coatings and thinners used in the coating operation are applied within the capture system, and coating solvent flash-off, curing, and drying occurs within the capture system. This criterion is not met if parts enter the open shop environment when being moved between a spray booth and a curing oven.

§ 63.3555 How do I determine the outlet THC emissions and add-on control device emission destruction or removal efficiency?

You must use the procedures and test methods in this section to determine either the outlet THC emissions or add-on control device emission destruction or removal efficiency as part of the performance tests required by § 63.3550. You must conduct three test runs as specified in § 63.7(e)(3), and each test run must last at least 1 hour.

(a) For all types of add-on control devices, use the test methods specified in paragraphs (a)(1) through (5) of this section.

(1) Use Method 1 or 1A of appendix A to 40 CFR part 60, as appropriate, to select sampling sites and velocity traverse points.

(2) Use Method 2, 2A, 2C, 2D, 2F, or 2G of appendix A to 40 CFR part 60, as appropriate, to measure gas volumetric flow rate.

(3) Use Method 3, 3A, or 3B of appendix A to 40 CFR part 60, as appropriate, for gas analysis to determine dry molecular weight. You may also use as an alternative to Method 3B, the manual method for measuring the oxygen, carbon dioxide, and carbon monoxide content of exhaust gas in ANSI/ASME PTC 19.10–1981, ''Flue and Exhaust Gas Analyses [Part 10, Instruments and Apparatus]'' (incorporated by reference, see § 63.14).

(4) Use Method 4 of appendix A to 40 CFR part 60 to determine stack gas moisture.

(5) Methods for determining gas volumetric flow rate, dry molecular weight,

sfrattini on LAPJZKW1R2 with $$_JOB
VerDate Sep<11>2014 09:16 Apr 04, 2023 Jkt 256165 PO 00000 Frm 00724 Fmt 8010 Sfmt 8010 Q:\40\256165.XXX PC31

and stack gas moisture must be performed, as applicable, during each test run.

(b) Measure total gaseous organic mass emissions as carbon at the inlet and outlet of the add-on control device simultaneously using either Method 25 or 25A of appendix A–7 to 40 CFR part 60 as specified in paragraphs (b)(1) through (3) of this section. You must use the same method for both the inlet and outlet measurements.

(1) Use Method 25 of appendix A–7 to 40 CFR part 60 if the add-on control device is an oxidizer, and you expect the total gaseous organic concentration as carbon to be more than 50 ppm at the control device outlet.

(2) Use Method 25A of appendix A–7 to 40 CFR part 60 if the add-on control device is an oxidizer, and you expect the total gaseous organic concentration as carbon to be 50 ppm or less at the control device outlet.

(3) Use Method 25A of appendix A–7 to 40 CFR part 60 if the add-on control device is not an oxidizer.

(4) You may use Method 18 of appendix A–6 to 40 CFR part 60 to subtract methane emissions from measured total gaseous organic mass emissions as carbon.

(5) Alternatively, any other test method or data that have been validated according to the applicable procedures in Method 301 of 40 CFR part 63, appendix A, and approved by the Administrator may be used.

(c) If two or more add-on control devices are used for the same emission stream, then you must measure emissions at the outlet of each device. For example, if one add-on control device is a concentrator with an outlet for the high-volume dilute stream that has been treated by the concentrator and a second add-on control device is an oxidizer with an outlet for the low-volume, concentrated stream that is treated with the oxidizer, you must measure emissions at the outlet of the oxidizer and the high-volume dilute stream outlet of the concentrator.

(d) For each test run, determine the total gaseous organic emissions mass flow rates for the inlet and outlet of the add-on control device using Equation 1 of this section. If there is more than one inlet or outlet to the add-on control device, you must calculate the total gaseous organic mass flow rate using Equation 1 of this section for each inlet and each outlet and then total all of the inlet emissions and total all of the outlet emissions.

$$M_f = Q_{sd} C_c (12)(0.0416)\left(10^{-6}\right) \qquad \text{(Eq. 1)}$$

Where:

M_f = Total gaseous organic emissions mass flow rate, kg/h.

C_c = The concentration of organic compounds as carbon in the vent gas, as determined by Method 25 or Method 25A, ppmvd.

Q_{sd} = Volumetric flow rate of gases entering or exiting the add-on control device, as determined by Method 2, 2A, 2C, 2D, 2F, or 2G, dry standard cubic meters/hour (dscm/h).

0.0416 = Conversion factor for molar volume, kg-moles per cubic meter (mol/m^3) (@ 293 Kelvin (K) and 760 millimeters of mercury (mmHg)).

NOTE: If M_f is calculated in English units (lb/h), the conversion factor for molar volume is 0.00256 lb-moles per cubic foot (mol/ft^3).

(e) For each test run, determine the add-on control device organic emissions destruction or removal efficiency using Equation 2 of this section.

$$DRE = 100 \times \frac{M_{fi} - M_{fo}}{M_{fi}} \qquad \text{(Eq. 2)}$$

Where:

DRE = Organic emissions destruction or removal efficiency of the add-on control device, percent.

M_{fi} = Total gaseous organic emissions mass flow rate at the inlet(s) to the add-on control device, using Equation 1 of this section, kg/h.

M_{fo} = Total gaseous organic emissions mass flow rate at the outlet(s) of the add-on control device, using Equation 1 of this section, kg/h.

sfrattini on LAPJZKW1R2 with $$_JOB
VerDate Sep<11>2014 09:16 Apr 04, 2023 Jkt 256165 PO 00000 Frm 00725 Fmt 8010 Sfmt 8010 Q:\40\256165.XXX PC31
ER13NO03.023<.MATH> ER13NO03.024<.MATH>

(f) Determine the emission destruction or removal efficiency of the add-on control device as the average of the efficiencies determined in the three test runs and calculated in Equation 2 of this section.

[68 FR 64446, Nov. 13, 2003, as amended at 85 FR 10855, Feb. 25, 2020]

§ 63.3556 How do I establish the emission capture system and add-on control device operating limits during the performance test?

During the performance tests required by § 63.3550 and described in §§ 63.3553, 63.3554, and 63.3555, you must establish the operating limits required by § 63.3492 according to this section, unless you have received approval for alternative monitoring and operating limits under § 63.8(f) as specified in § 63.3492.

(a) *Thermal oxidizers.* If your add-on control device is a thermal oxidizer, establish the operating limits according to paragraphs (a)(1) and (2) of this section.

(1) During performance tests, you must monitor and record the combustion temperature at least once every 15 minutes during each of the three test runs. You must monitor the temperature in the firebox of the thermal oxidizer or immediately downstream of the firebox before any substantial heat exchange occurs.

(2) For each performance test, use the data collected during the performance test to calculate and record the average combustion temperature maintained during the performance test. That average combustion temperature is the minimum operating limit for your thermal oxidizer.

(b) *Catalytic oxidizers.* If your add-on control device is a catalytic oxidizer, establish the operating limits according to either paragraphs (b)(1) and (2) or paragraphs (b)(3) and (4) of this section.

(1) During performance tests, you must monitor and record the temperature at the inlet to the catalyst bed and the temperature difference across the catalyst bed at least once every 15 minutes during each of the three test runs.

(2) For each performance test, use the data collected during the performance test to calculate and record the average temperature at the inlet to the catalyst bed and the average temperature difference across the catalyst bed maintained during the performance test. The average temperature difference is the minimum operating limit for your catalytic oxidizer.

(3) As an alternative to monitoring the temperature difference across the catalyst bed, you may monitor the temperature at the inlet to the catalyst bed and implement a site-specific inspection and maintenance plan for your catalytic oxidizer as specified in paragraph (b)(4) of this section. During performance tests, you must monitor and record the temperature at the inlet to the catalyst bed at least once every 15 minutes during each of the three test runs. Use the data collected during each performance test to calculate and record the average temperature at the inlet to the catalyst bed during the performance test. That is the minimum operating limit for your catalytic oxidizer.

(4) You must develop and implement an inspection and maintenance plan for your catalytic oxidizer(s) for which you elect to monitor according to paragraph (b)(3) of this section. The plan must address, at a minimum, the elements specified in paragraphs (b)(4)(i) through (iii) of this section.

(i) Annual sampling and analysis of the catalyst activity (*i.e.*, conversion efficiency) following the manufacturer's or catalyst supplier's recommended procedures.

(ii) Monthly inspection of the oxidizer system, including the burner assembly and fuel supply lines for problems and, as necessary, adjust the equipment to assure proper air-to-fuel mixtures.

(iii) Annual internal and monthly external visual inspection of the catalyst bed to check for channeling, abrasion, and settling. If problems are found, you must take corrective action consistent with the manufacturer's recommendations and conduct a new performance test to determine destruction efficiency according to § 63.3555.

sfrattini on LAPJZKW1R2 with $$_JOB
VerDate Sep<11>2014 09:16 Apr 04, 2023 Jkt 256165 PO 00000 Frm 00726 Fmt 8010 Sfmt 8010 Q:\40\256165.XXX PC31

(c) *Regenerative oxidizers.* If your add-on control device is a regenerative oxidizer, establish operating limits according to paragraphs (c)(1) and (2) of this section.

(1) You must establish all applicable operating limits according to paragraphs (a) and (b) of this section.

(2) You must submit a valve inspection plan that documents the steps taken to minimize the amount of leakage during the regenerative process. This plan can include, but is not limited to, routine inspection of key parameters of the valve operating system (*e.g.*, solenoid valve operation, air pressure, hydraulic pressure), visual inspection of the valves during internal inspections, and/or actual testing of the emission stream for leakage.

(d) *Carbon adsorbers.* If your add-on control device is a carbon adsorber, establish the operating limits according to paragraphs (d)(1) and (2) of this section.

(1) You must monitor and record the total regeneration desorbing gas (*e.g.*, steam or nitrogen) mass flow for each regeneration cycle, and the carbon bed temperature after each carbon bed regeneration and cooling cycle for the regeneration cycle either immediately preceding or immediately following performance tests.

(2) The operating limits for your carbon adsorber are the minimum total desorbing gas mass flow recorded during the regeneration cycle and the maximum carbon bed temperature recorded after the cooling cycle.

(e) *Condensers.* If your add-on control device is a condenser, establish the operating limits according to paragraphs (e)(1) and (2) of this section.

(1) During performance tests, monitor and record the condenser outlet (product side) gas temperature at least once every 15 minutes during each of the three test runs.

(2) For each performance test, use the data collected during the performance test to calculate and record the average condenser outlet (product side) gas temperature maintained during the performance test. This average condenser outlet gas temperature is the maximum operating limit for your condenser.

(f) *Concentrators.* If your add-on control device includes a concentrator, you must establish operating limits for the concentrator according to paragraphs (f)(1) through (7) of this section.

(1) During performance tests, monitor and record the inlet temperature to the desorption/reactivation zone of the concentrator at least once every 15 minutes during each of the three runs of the performance test.

(2) For each performance test, use the data collected during the performance test to calculate and record the average temperature. This is the minimum operating limit for the desorption/reactivation zone inlet temperature.

(3) During performance tests, monitor and record an indicator(s) of performance for the desorption/reactivation fan operation at least once every 15 minutes during each of the three runs of the performance test. The indicator can be speed in rpm, power in amps, static pressure, or flow rate.

(4) Establish a suitable range for the parameter(s) selected based on the system design specifications, historical data, and/or data obtained concurrent with an emissions performance test. This is the operation limit range for the desorption/reactivation fan operation.

(5) During performance tests, monitor the rotational speed of the concentrator at least once every 15 minutes during each of the three runs of a performance test.

(6) For each performance test, use the data collected during the performance test to calculate and record the average rotational speed. This is the minimum operating limit for the rotational speed of the concentrator. However, the indicator range for the rotational speed may be changed if an engineering evaluation is conducted and a determination made that the change in speed will not affect compliance with the emission limit.

(7) Develop and implement an inspection and maintenance plan for the concentrator(s) that you elect to monitor according to paragraph (f) of this section. The plan must include, at a minimum, annual sampling and analysis of the absorbent material (*i.e.*, adsorbent

sfrattini on LAPJZKW1R2 with $$_JOB
VerDate Sep<11>2014 09:16 Apr 04, 2023 Jkt 256165 PO 00000 Frm 00727 Fmt 8010 Sfmt 8010 Q:\40\256165.XXX PC31

activity) following the manufacturer's recommended procedures.

(g) *Emission capture systems.* For each capture device that is part of a PTE that meets the criteria of § 63.3554, the operating limit for a PTE is specified in Table 4 to this subpart.

[68 FR 64446, Nov. 13, 2003, as amended at 85 FR 10855, Feb. 25, 2020]

§ 63.3557 What are the requirements for continuous parameter monitoring system installation, operation, and maintenance?

(a) *General.* You must install, operate, and maintain each CPMS specified in paragraphs (c), (e), and (f) of this section according to paragraphs (a)(1) through (6) of this section. You must install, operate, and maintain each CPMS specified in paragraphs (b) and (d) of this section according to paragraphs (a)(3) through (5) of this section.

(1) The CPMS must complete a minimum of one cycle of operation for each successive 15-minute period.

(2) You must determine the average of all recorded readings for each successive 3-hour period of the emission capture system and add-on control device operation.

(3) You must record the results of each inspection, calibration, and validation check of the CPMS.

(4) You must maintain the CPMS at all times in accordance with § 63.3500(b) and have readily available necessary parts for routine repairs of the monitoring equipment.

(5) You must operate the CPMS and collect emission capture system and add-on control device parameter data at all times in accordance with § 63.3500(b) that a controlled coating operation is operating, except during monitoring malfunctions, associated repairs, and required quality assurance or control activities (including, if applicable, calibration checks and required zero and span adjustments).

(6) You must not use emission capture system or add-on control device parameter data recorded during monitoring malfunctions, associated repairs, out of control periods, or required quality assurance or control activities when calculating data averages. You must use all the data collected during all other periods in calculating the data averages for determining compliance with the emission capture system and add-on control device operating limits.

(7) A monitoring malfunction is any sudden, infrequent, not reasonably preventable failure of the CPMS to provide valid data. Monitoring failures that are caused, in part, by poor maintenance or careless operation are not malfunctions. Before August 24, 2020, any period for which the monitoring system is out of control and data are not available for required calculations is a deviation from the monitoring requirements. On and after August 24, 2020, except for periods of required quality assurance or control activities, any period for which the CPMS fails to operate and record data continuously as required by paragraph (a)(5) of this section, or generates data that cannot be included in calculating averages as specified in (a)(6) of this section constitutes a deviation from the monitoring requirements.

(b) *Capture system bypass line.* You must meet the requirements of paragraph (b)(1) or (2) of this section for each emission capture system that contains bypass lines that could divert emissions away from the add-on control device to the atmosphere.

(1) Properly install, maintain, and operate a flow indicator that takes a reading at least once every 15 minutes. The flow indicator shall be installed at the entrance to any bypass line.

(2) Secure the bypass line valve in the nondiverting position with a car-seal or lock-and-key type configuration. A visual inspection of the seal or closure mechanism shall be performed at least once every month to ensure the valve is maintained in the nondiverting position, and the vent stream is not diverted through the bypass line.

(c) *Thermal oxidizers and catalytic oxidizers.* If you are using a thermal oxidizer or catalytic oxidizer as an add-on control device (including those used with concentrators or with carbon adsorbers to treat desorbed concentrate streams), you must comply with the requirements in paragraphs (c)(1) through (3) of this section.

(1) For a thermal oxidizer, install a gas temperature monitor in the firebox of the thermal oxidizer or in the duct

sfrattini on LAPJZKW1R2 with $$_JOB
VerDate Sep<11>2014 09:16 Apr 04, 2023 Jkt 256165 PO 00000 Frm 00728 Fmt 8010 Sfmt 8010 Q:\40\256165.XXX PC31

immediately downstream of the firebox before any substantial heat exchange occurs.

(2) For a catalytic oxidizer, install a gas temperature monitor according to paragraph (c)(2)(i) or (ii) of this section.

(i) If you establish operating limits according to § 63.3556(b)(1) and (2), then you must install the gas temperature monitors both upstream and downstream of the catalyst bed. The temperature monitors must be in the gas stream at the inlet to and the outlet of the catalyst bed to measure the temperature difference across the bed.

(ii) If you establish operating limits according to § 63.3556(b)(3) and (4), then you must install a gas temperature monitor upstream of the catalyst bed. The temperature monitor must be in the gas stream at the inlet to the catalyst bed to measure the temperature.

(3) For all thermal oxidizers and catalytic oxidizers, you must meet the requirements in paragraphs (a) and (c)(3)(i) through (ii) of this section for each gas temperature monitoring device. For the purposes of this paragraph (c)(3), a thermocouple is part of the temperature sensor.

(i) Locate the temperature sensor in a position that provides a representative temperature.

(ii) Use a temperature sensor with a minimum accuracy of ±1.2 degrees Celsius or ±1 percent of the temperature value in degrees Celsius, whichever is larger.

(d) *Carbon adsorbers.* If you are using a carbon adsorber as an add-on control device, you must monitor the total regeneration desorbing gas (*e.g.*, steam or nitrogen) mass flow for each regeneration cycle, the carbon bed temperature after each regeneration and cooling cycle, and comply with paragraphs (a)(3) through (5) and (d)(1) and (2) of this section.

(1) The regeneration desorbing gas mass flow monitor must be an integrating device having an accuracy of ±10 percent capable of recording the total regeneration desorbing gas mass flow for each regeneration cycle.

(2) The carbon bed temperature monitor must have a minimum accuracy of ±1.2 degrees Celsius or ±1 percent of the temperature value in degrees Celsius, whichever is larger, and must be capable of recording the temperature within 15 minutes of completing any carbon bed cooling cycle.

(e) *Condensers.* If you are using a condenser, you must monitor the condenser outlet (product side) gas temperature and comply with paragraphs (a) and (e)(1) and (2) of this section.

(1) The gas temperature monitor must have a minimum accuracy of ±1.2 degrees Celsius or ±1 percent of the temperature value in degrees Celsius, whichever is larger.

(2) The temperature monitor must provide a continuous gas temperature record.

(f) *Concentrators.* If you are using a concentrator such as a zeolite wheel or rotary carbon bed concentrator, you must comply with the requirements in paragraphs (f)(1) through (4) of this section.

(1) You must install a temperature monitor at the inlet to the desorption/reactivation zone of the concentrator. The temperature monitor must meet the requirements in paragraphs (a) and (c)(3) of this section.

(2) You must select an indicator(s) of performance of the desorption/reactivation fan operation, such as speed, power, static pressure, or flow rate.

(3) You must monitor the rotational speed of the concentrator in revolutions per hour.

(4) You must verify the performance of the adsorbent material by examining representative samples and testing adsorbent activity per the manufacturer's recommendations.

[68 FR 64446, Nov. 13, 2003, as amended at 71 FR 1384, Jan. 6, 2006; 85 FR 10856, Feb. 25, 2020]

OTHER REQUIREMENTS AND INFORMATION

§ 63.3560 Who implements and enforces this subpart?

(a) This subpart can be implemented and enforced by us, the United States Environmental Protection Agency (U.S. EPA), or a delegated authority such as your State, local, or tribal agency. If the Administrator has delegated authority to your State, local, or tribal agency, then that agency, in addition to the EPA, has the authority to implement and enforce this subpart.

sfrattini on LAPJZKW1R2 with $$_JOB
VerDate Sep<11>2014 09:16 Apr 04, 2023 Jkt 256165 PO 00000 Frm 00729 Fmt 8010 Sfmt 8010 Q:\40\256165.XXX PC31

You should contact your EPA Regional Office to find out if implementation and enforcement of this subpart is delegated to your State, local, or tribal agency.

(b) In delegating implementation and enforcement authority of this subpart to a State, local, or tribal agency under 40 CFR part 63, subpart E, the authorities contained in paragraph (c) of this section are retained by the EPA Administrator and are not transferred to the State, local, or tribal agency.

(c) The authorities that will not be delegated to State, local, or tribal agencies are listed in paragraphs (c)(1) through (4) of this section.

(1) Approval of alternatives to the work practice standards in § 63.3493.

(2) Approval of major alternatives to test methods under § 63.7(e)(2)(ii) and (f) and as defined in § 63.90.

(3) Approval of major alternatives to monitoring under § 63.8(f) and as defined in § 63.90.

(4) Approval of major alternatives to recordkeeping and reporting under § 63.10(f) and as defined in § 63.90.

§ 63.3561 What definitions apply to this subpart?

Terms used in this subpart are defined in the CAA, in 40 CFR 63.2, and in this section as follows:

Add-on control means an air pollution control device, such as a thermal oxidizer or carbon adsorber, that reduces pollution in an air stream by destruction or removal before discharge to the atmosphere.

Adhesive means any chemical substance that is applied for the purpose of bonding two surfaces together.

Aerosol can means any can into which a pressurized aerosol product is packaged.

Aseptic coating means any coating that must withstand high temperature steam, chemicals, or a combination of both used to sterilize food cans prior to filling.

Can body means a formed metal can, excluding the unattached end(s).

Can end means a can part manufactured from metal substrate equal to or thinner than 0.3785 millimeters (mm) (0.0149 inch) for the purpose of sealing the ends of can bodies including nonmetal or composite can bodies.

Capture device means a hood, enclosure, room, floor sweep, or other means of containing or collecting emissions and directing those emissions into an add-on air pollution control device.

Capture efficiency or *capture system efficiency* means the portion (expressed as a percentage) of the pollutants from an emission source that is delivered to an add-on control device.

Capture system means one or more capture devices intended to collect emissions generated by a coating operation in the use of coatings, both at the point of application and at subsequent points where emissions from the coatings occur, such as flash-off, drying, or curing.

Cleaning material means a solvent used to remove contaminants and other materials such as dirt, grease, oil, and dried or wet coating (*e.g.*, depainting) from a substrate before or after coating application or from equipment associated with a coating operation, such as spray booths, spray guns, racks, tanks, and hangers. Thus, it includes any cleaning material used on substrates or equipment or both.

Coating means a material applied to a substrate for decorative, protective, or functional purposes. Such materials include, but are not limited to, paints, sealants, caulks, inks, adhesives, and maskants. Fusion pastes, ink jet markings, mist solutions, and lubricants, as well as decorative, protective, or functional materials that consist only of protective oils for metal, acids, bases, or any combination of these substances, are not considered coatings for the purposes of this subpart.

Coating operation means equipment used to apply coating to a metal can or end (including decorative tins), or metal crown or closure, and to dry or cure the coating after application. A coating operation always includes at least the point at which a coating is applied and all subsequent points in the affected source where organic HAP emissions from that coating occur. There may be multiple coating operations in an affected source. Coating application with hand-held nonrefillable aerosol containers, touch-up markers, or marking pens is not a coating operation for the purposes of this subpart.

sfrattini on LAPJZKW1R2 with $$_JOB
VerDate Sep<11>2014 09:16 Apr 04, 2023 Jkt 256165 PO 00000 Frm 00730 Fmt 8010 Sfmt 8010 Q:\40\256165.XXX PC31

Coating solids means the nonvolatile portion of a coating that makes up the dry film.

Continuous parameter monitoring system (CPMS) means the total equipment that may be required to meet the data acquisition and availability requirements of this subpart; used to sample, condition (if applicable), analyze, and provide a record of coating operation, capture system, or add-on control device parameters.

Controlled coating operation means a coating operation from which some or all of the organic HAP emissions are routed through an emission capture system and add-on control device.

Crowns and closures means steel or aluminum coverings such as bottle caps and jar lids for containers other than can ends.

Decorative tin means a single-walled container, designed to be covered or uncovered that is manufactured from metal substrate equal to or thinner than 0.3785 mm (0.0149 inch) and is normally coated on the exterior surface with decorative coatings. Decorative tins may contain foods but are not hermetically sealed and are not subject to food processing steps such as retort or pasteurization. Interior coatings are not usually applied to protect the metal and contents from chemical interaction.

Deviation, before August 24, 2020, means any instance in which an affected source subject to this subpart or an owner or operator of such a source:

(1) Fails to meet any requirement or obligation established by this subpart including but not limited to any emission limit, operating limit, or work practice standard; or

(2) Fails to meet any term or condition that is adopted to implement an applicable requirement in this subpart and that is included in the operating permit for any affected source required to obtain such a permit; or

(3) Fails to meet any emission limit, operating limit, or work practice standard in this subpart during startup, shutdown, or malfunction regardless of whether or not such failure is permitted by this subpart.

Deviation, on and after August 24, 2020, means any instance in which an affected source subject to this subpart or an owner or operator of such a source:

(1) Fails to meet any requirement or obligation established by this subpart including but not limited to any emission limit, operating limit, or work practice standard; or

(2) Fails to meet any term or condition that is adopted to implement an applicable requirement in this subpart and that is included in the operating permit for any affected source required to obtain such a permit.

Drum means a cylindrical metal container with walls of 29 gauge or thicker and a capacity greater than 45.4 liters (12 gal).

Emission limitation means an emission limit, operating limit, or work practice standard.

Enclosure means a structure that surrounds a source of emissions and captures and directs the emissions to an add-on control device.

End coating means the application of end seal compound or repair spray on can ends during manufacturing.

End seal compound means the coating applied onto ends of cans that functions to seal the end(s) of a can to the can body.

Exempt compound means a specific compound that is not considered a VOC due to negligible photochemical reactivity. The exempt compounds are listed in 40 CFR 51.100(s).

Food can means any can manufactured to contain edible products and designed to be hermetically sealed. Does not include decorative tins.

Fusion paste means a material used to attach nozzles and other miscellaneous parts to general line cans.

General line can means any can manufactured to contain inedible products. Does not include aerosol cans or decorative tins.

Ink jet marking means the ink and makeup fluid used for date code and other identification markings on a can for the marking on a can indicating when food in a can has completed the retort process.

Inside spray means a coating sprayed on the interior of a can body to provide a protective film between the can and its contents.

Lubricant means an organic liquid used as a lubricating agent to facilitate

sfrattini on LAPJZKW1R2 with $$_JOB
VerDate Sep<11>2014 09:16 Apr 04, 2023 Jkt 256165 PO 00000 Frm 00731 Fmt 8010 Sfmt 8010 Q:\40\256165.XXX PC31

the handling and fabrication (*e.g.*, tab making, stamping, or necking) of can bodies or ends.

Manufacturer's formulation data means data on a material (such as a coating) that are supplied by the material manufacturer based on knowledge of the ingredients used to manufacture that material, rather than based on testing of the material with the test methods specified in § 63.3521. Manufacturer's formulation data may include, but are not limited to, information on density, organic HAP content, volatile organic matter content, and coating solids content.

Mass fraction of organic HAP means the ratio of the mass of organic HAP to the mass of a material in which it is contained, expressed as kg of organic HAP per kg of material.

Metal can means a single-walled container manufactured from metal substrate equal to or thinner than 0.3785 mm (0.0149 inch).

Mist solution means a hydrocarbon or aqueous solution used as an application aid with solvent-based or waterborne end seal compounds to prevent compound accumulation on the lining nozzle.

Month means a calendar month or a pre-specified period of 28 days to 35 days to allow for flexibility in recordkeeping when data are based on a business accounting period.

Nonaseptic coating means any coating that is not subjected to high temperature steam, chemicals, or a combination of both to sterilize food cans prior to filling.

One and two-piece draw and iron can means a steel or aluminum can manufactured by the draw and iron process. Includes two-piece beverage cans, two-piece food cans, and one-piece aerosol cans.

One-piece aerosol can means an aerosol can formed by the draw and iron process to which no ends are attached and a valve is placed directly on top.

Organic HAP content means the mass of organic HAP per volume of coating solids for a coating, calculated using Equation 1 of § 63.3521. The organic HAP content is determined for the coating in the condition it is in when received from its manufacturer or supplier and does not account for any alteration after receipt.

Pail means a cylindrical or rectangular metal container with walls of 29 gauge or thicker and a capacity of 7.6 to 45.4 liters (2 to 12 gal) (for example, bucket).

Permanent total enclosure (PTE) means a permanently installed enclosure that meets the criteria of Method 204 of appendix M, 40 CFR part 51, for a PTE and that directs all the exhaust gases from the enclosure to an add-on control device.

Protective oil means an organic material that is applied to metal for the purpose of providing lubrication or protection from corrosion without forming a solid film. This definition of protective oil includes, but is not limited to, lubricating oils, evaporative oils (including those that evaporate completely), and extrusion oils.

Repair spray means a spray coating for post-formed easy-open ends to provide additional protection in the scored areas by covering breaks at the score location or to provide an additional layer of protective coating on the interior of the end for corrosion resistance.

Research or laboratory equipment means any equipment that is being used to conduct research and development of new processes and products, when such equipment is operated under the close supervision of technically trained personnel and is not engaged in the manufacture of final or intermediate products for commercial purposes, except in a *de minimis* manner.

Responsible official means responsible official as defined in 40 CFR 70.2.

Sheetcoating means a can manufacturing coating process that involves coating of flat metal sheets before they are formed into cans.

Side seam stripe means a coating applied to the interior and/or exterior of the welded or soldered seam of a three-piece can body to protect the exposed metal.

Startup, initial means the first time equipment is brought online in a facility.

Surface preparation means use of a cleaning material on a portion of or all of a substrate. That includes use of a cleaning material to remove dried

sfrattini on LAPJZKW1R2 with $$_JOB
VerDate Sep<11>2014 09:16 Apr 04, 2023 Jkt 256165 PO 00000 Frm 00732 Fmt 8010 Sfmt 8010 Q:\40\256165.XXX PC31

coating which is sometimes called ''depainting.''

Temporary total enclosure (TTE) means an enclosure constructed for the purpose of measuring the capture efficiency of pollutants emitted from a given source as defined in Method 204 of appendix M, 40 CFR part 51.

Thinner means an organic solvent that is added to a coating after the coating is received from the supplier.

Three-piece aerosol can means a steel aerosol can formed by the three-piece can assembly process manufactured to contain food or nonfood products.

Three-piece can assembly means the process of forming a flat metal sheet into a shaped can body which may include the processes of necking, flanging, beading, and seaming and application of a side seam stripe and/or an inside spray coating.

Three-piece food can means a steel can formed by the three-piece can assembly process manufactured to contain edible products and designed to be hermetically sealed.

Total volatile hydrocarbon (TVH) means the total amount of nonaqueous volatile organic matter determined according to Methods 204 and 204A through 204F of appendix M to 40 CFR part 51 and substituting the term TVH each place in the methods where the term VOC is used. The TVH includes both VOC and non-VOC.

Two-piece beverage can means a two-piece draw and iron can manufactured to contain drinkable liquids such as beer, soft drinks, or fruit juices.

Two-piece food can means a steel or aluminum can manufactured by the draw and iron process and designed to contain edible products other than beverages and to be hermetically sealed.

Uncontrolled coating operation means a coating operation from which none of the organic HAP emissions are routed through an emission capture system and add-on control device.

Volatile organic compound (VOC) means any compound defined as VOC in 40 CFR 51.100(s).

Volume fraction of coating solids means the ratio of the volume of coating solids (also known as volume of nonvolatiles) to the volume of coating; liters of coating solids per liter of coating.

Wastewater means water that is generated in a coating operation and is collected, stored, or treated prior to being discarded or discharged.

[68 FR 64446, Nov. 13, 2003, as amended at 71 FR 1384, Jan. 6, 2006; 85 FR 10856, Feb. 25, 2020]

TABLE 1 TO SUBPART KKKK OF PART 63—EMISSION LIMITS FOR NEW OR RECONSTRUCTED AFFECTED SOURCES

You must comply with the emission limits that apply to your affected source in the following table as required by § 63.3490(a) through (c).

If you apply surface coatings to metal cans or metal can parts in this subcategory ...	Then for all coatings of this type ...	You must meet the following organic HAP emission limit in kg HAP/liter solids (lbs HAP/gal solids): [a] [b]
1. One and two-piece draw and iron can body coating.	a. Two-piece beverage cans—all coatings.	0.04 (0.31).
	b. Two-piece food cans—all coatings	0.06 (0.50).
	c. One-piece aerosol cans—all coatings	0.08 (0.65).
2. Sheetcoating	Sheetcoating	0.02 (0.17).
3. Three-piece can assembly	a. Inside spray	0.12 (1.03).
	b. Aseptic side seam stripes on food cans.	1.48 (12.37).
	c. Nonaseptic side seam stripes on food cans.	0.72 (5.96).
	d. Side seam stripes on general line nonfood cans.	1.18 (9.84).
	e. Side seam stripes on aerosol cans	1.46 (12.14).
4. End coating	a. Aseptic end seal compounds	0.06 (0.54).
	b. Nonaseptic end seal compounds	0.00 (0.00).
	c. Repair spray coatings	0.64 (5.34).

[a] If you apply surface coatings of more than one type within any one subcategory you may calculate an OSEL according to § 63.3531(i).

[b] Rounding differences in specific emission limits are attributable to unit conversions.

sfrattini on LAPJZKW1R2 with $$_JOB
VerDate Sep<11>2014 09:16 Apr 04, 2023 Jkt 256165 PO 00000 Frm 00733 Fmt 8010 Sfmt 8026 Q:\40\256165.XXX PC31

TABLE 2 TO SUBPART KKKK OF PART 63—EMISSION LIMITS FOR EXISTING AFFECTED SOURCES

You must comply with the emission limits that apply to your affected source in the following table as required by § 63.3490(a) through (c).

If you apply surface coatings to metal cans or metal can parts in this subcategory ...	Then for all coatings of this type ...	You must meet the following organic HAP emission limit in kg HAP/liter solids (lbs HAP/gal solids): [a] [b]
1. One and two-piece draw and iron can body coating.	a. Two-piece beverage cans—all coatings.	0.07 (0.59).
	b. Two-piece food cans—all coatings	0.06 (0.51).
	c. One-piece aerosol cans—all coatings	0.12 (0.99).
2. Sheetcoating	Sheetcoating	0.03 (0.26).
3. Three-piece can assembly	a. Inside spray	0.29 (2.43).
	b. Aseptic side seam stripes on food cans.	1.94 (16.16).
	c. Nonaseptic side seam stripes on food cans.	0.79 (6.57).
	d. Side seam stripes on general line nonfood cans.	1.18 (9.84).
	e. Side seam stripes on aerosol cans	1.46 (12.14).
4. End coating	a. Aseptic end seal compounds	0.06 (0.54).
	b. Nonaseptic end seal compounds	0.00 (0.00).
	c. Repair spray coatings	2.06 (17.17).

[a] If you apply surface coatings of more than one type within any one subcategory you may calculate an OSEL according to § 63.3531(i).
[b] Rounding differences in specific emission limits are attributable to unit conversions.

TABLE 3 TO SUBPART KKKK OF PART 63—EMISSION LIMITS FOR AFFECTED SOURCES USING THE CONTROL EFFICIENCY/OUTLET CONCENTRATION COMPLIANCE OPTION

You must comply with the emission limits that apply to your affected source in the following table as required by § 63.3490(d).

If you use the control efficiency/outlet concentration option to comply with the emission limitations for any coating operation(s) . . .	Then you must comply with one of the following by using an emissions control system to . . .
1. in a new or reconstructed affected source	a. reduce emissions of total HAP, measured as THC (as carbon), [a] by 97 percent; or b. limit emissions of total HAP, measured as THC (as carbon), [a] to 20 ppmvd at the control device outlet and use a PTE.
2. in an existing affected source	a. reduce emissions of total HAP, measured as THC (as carbon), [a] by 95 percent; or b. limit emissions of total HAP, measured as THC (as carbon), [a] to 20 ppmvd at the control device outlet and use a PTE.

[a] You may choose to subtract methane from THC as carbon measurements.

TABLE 4 TO SUBPART KKKK OF PART 63—OPERATING LIMITS IF USING THE EMISSION RATE WITH ADD-ON CONTROLS OPTION OR THE CONTROL EFFICIENCY/OUTLET CONCENTRATION COMPLIANCE OPTION

If you are required to comply with operating limits by § 63.3492, you must comply with the applicable operating limits in the following table:

For the following device . . .	You must meet the following operating limit . . .	And you must demonstrate continuous compliance with the operating limit by . . .
1. Thermal oxidizer	a. The average combustion temperature in each 3-hour block period must not fall below the combustion temperature limit established according to § 63.3546(a) or § 63.3556(a).	i. Collecting the combustion temperature data according to § 63.3547(c) or § 63.3557(c); ii. Reducing the data to 3-hour block averages; and iii. Maintaining the 3-hour block average combustion temperature at or above the temperature limit established according to § 63.3546(a) or § 63.3556(a).

sfrattini on LAPJZKW1R2 with $$_JOB
VerDate Sep<11>2014 09:16 Apr 04, 2023 Jkt 256165 PO 00000 Frm 00734 Fmt 8010 Sfmt 8002 Q:\40\256165.XXX PC31

For the following device . . .	You must meet the following operating limit . . .	And you must demonstrate continuous compliance with the operating limit by . . .
2. Catalytic oxidizer	a. The average temperature difference across the catalyst bed in each 3-hour period does not fall below the temperature difference limit established according to § 63.3546(b)(2) or § 63.3556(b)(2); or	i. Collecting the temperature data according to § 63.3547(c) or § 63.3578(c); ii. Reducing the data to 3-hour block averages; and iii. Maintaining the 3-hour block average temperature difference at or above the temperature difference limit established according to § 63.3546(b)(2) or § 63.3556(b)(2).
	b. The average temperature measured at the inlet to the catalyst bed in each 3-hour block period must not fall below the limit established according to § 63.3546(b) or § 63.3556(b); and	i. Collecting the temperature data according to § 63.3547(c) or § 63.3557(c); and ii. Reducing the data to 3-hour block averages, and iii. Maintaining the 3-hour block average temperature at the inlet to the catalyst bed at or above the temperature limit established according to § 63.3546(b) or § 63.3556(b).
	c. Develop and implement an inspection and maintenance plan according to § 63.3546(b)(4) or § 63.3556(b)(4).	Maintaining an up-to-date inspection plan, records of annual catalyst activity checks, records of monthly inspections of the oxidizer system, and records of the annual internal inspections of the catalyst bed. If a problem is discovered during a monthly or annual inspection required by § 63.3546(b)(4) or § 63.3556(b)(4), you must take corrective action as soon as practicable consistent with the manufacturer's recommendations.
3. Regenerative oxidizers	a. Develop and implement a valve inspection plan according to § 63.3546(c) or § 63.3546(c); and either	Maintaining an up-to-date valve inspection plan. If a problem is discovered during an inspection required by § 63.3556(c), or § 63.3556(c), you must take corrective action as soon as soon as practicable.
	b. If you are using a regenerative thermal oxidizer, follow the operating limits according to 1.a of this table; or	See all applicable items in 1.a of this table.
	c. If you are using a regenerative catalytic oxidizer, follow the operating limits according to item 2.a of this table.	See all applicable items in 2.a, 2.b, and 2.c of this table.
4. Carbon adsorber	a. The total regeneration desorbing gas (*e.g.,* steam or nitrogen) mass flow for each carbon bed regeneration cycle must not fall below the total regeneration desorbing gas mass flow limit established according to § 63.3546(d) or § 63.3556(d).	i. Measuring the total regeneration desorbing gas (*e.g.,* steam or nitrogen) mass flow for each regeneration cycle according to § 63.3547(d) or § 63.3557(d); and ii. Maintaining the total regeneration desorbing gas mass flow at or above the mass flow limit.
	b. The temperature of the carbon bed, after completing each regeneration and any cooling cycle, must not exceed the carbon bed temperature limit established according to § 63.3546(d) or § 63.3556(d).	i. Measuring the temperature of the carbon bed, after completing each regeneration and any cooling cycle, according to § 63.3547(d) or § 63.3557(d); and ii. Operating the carbon beds such that each carbon bed is not returned to service until completing each regeneration and any cooling cycle until the recorded temperature of the carbon bed is at or below the temperature limit.
5. Condenser	a. The average condenser outlet (product side) gas temperature in each 3-hour period must not exceed the temperature limit established according to § 63,3546(e) or § 63.3556(e).	i. Collecting the condenser outlet (product side) gas temperature according to § 63.3547(e) or § 63.3557(e); ii. Reducing the data to 3-hour block averages; and iii. Maintaining the 3-hour block average gas temperature at the outlet at or below the temperature limit.

sfrattini on LAPJZKW1R2 with $$_JOB
VerDate Sep<11>2014 09:16 Apr 04, 2023 Jkt 256165 PO 00000 Frm 00735 Fmt 8010 Sfmt 8002 Q:\40\256165.XXX PC31

For the following device . . .	You must meet the following operating limit . . .	And you must demonstrate continuous compliance with the operating limit by . . .
6. Concentrators, including zeolite wheels and rotary carbon absorbers.	a. The average inlet temperature measured from the desorption reactivation zone in each 3-hour block period must not fall below the limit established according to § 63.3546(f) or § 63.3556(f).	i. Collecting the temperature data including zeolite inlet temperature according to § 63.3547(f) ii. Reducing the data to 3-hour block averages; and iii. Maintaining the 3-hour block average temperature at or above the temperature limit.
	b. The indicator of performance for the desorption reactivation fan operation in each 3-hour block period must not fall outside of the range established according to § 63.3547(f) or § 63.3556(f).	i. Collecting the indicator data according to § 63.3547(f) or § 63.3557(f); and ii. Maintaining the indicator data within the range established.
	c. The nominal rotational speed of the concentrator in each 3-hour block period must not fall below the speed established according to § 63.3546(f) or § 63.3556(f).	i. Collecting the rotational speed according to § 63.3547(f) or § 63.3557(f); ii. Reducing the speed data to 3-hour block averages; and iii. Maintaining the 3-hour block average speed at or above the rotational speed limit.
	d. Develop and implement an inspection and maintenance plan according to § 63.3546(f)(3) or § 63.3556(f)(3).	Maintaining an up-to-date inspection plan, and records of annual adsorbent activity checks. The results shall be compared to historical results and/or results for new adsorbents. If a problem is discovered during the annual inspection required by § 63.3546(f)(3) or § 63.3556(f)(3), you must take corrective action as soon as practicable consistent with the manufacturer's recommendations.
7. Emission capture system that is a PTE according to § 63.3544(a) or § 63.3554(a).	a. The direction of the air flow at all times must be into the enclosure; and either	i. Collecting the direction of air of air flow, and either the facial velocity of air through all natural draft openings or the pressure drop across the enclosure; and ii. Reducing the data collected each successive 15-minute period to 3-hour block averages according to § 63.3547(a)(1) and (2) or § 63.3557(a)(1) and (2), as applicable; and iii. Maintaining the 3-hour block average facial velocity of air flow through all natural draft openings or the pressure drop at or above the facial velocity limit or pressure drop limit, and maintaining the direction of air flow into the enclosure at all times.
	b. The average facial velocity of air through all natural draft openings in the enclosure must be at least 200 feet per minute; or	*See* items 7.a.i and ii of this table.
	c. The pressure drop across the enclosure must be at least 0.007 inch H_20, as established in Method 204 of appendix M to 40 CFR part 51.	*See* items 7.a.i and ii of this table.

sfrattini on LAPJZKW1R2 with $$_JOB
VerDate Sep<11>2014 09:16 Apr 04, 2023 Jkt 256165 PO 00000 Frm 00736 Fmt 8010 Sfmt 8002 Q:\40\256165.XXX PC31

For the following device . . .	You must meet the following operating limit . . .	And you must demonstrate continuous compliance with the operating limit by . . .
8. Emission capture system that is not a PTE according to § 63.3544(a).	a. The average gas volumetric flow rate at a location upstream of the control device, or duct static pressure at a location upstream (i.e., vacuum side) of the primary fan in each duct of each capture device or upstream of the fan that is common to multiple capture devices in each 3-hour period must not fall below the average volumetric flow rate or above the duct static pressure limit established for that capture device in accordance with § 63.3546 or § 63.3556, as applicable.	i. Measuring the gas volumetric flow at a location upstream of the control device, or duct static pressure at a location upstream (i.e., vacuum side) of the primary fan in each duct of each capture device upstream or upstream of the fan that is common to multiple capture devices; and ii. Reducing the data collected each successive 15-minute period to 3-hour block averages according to § 63.3547(a)(1) and (2) or § 63.3557(a)(1) and (2), as applicable; and iii. Maintaining the 3-hour block average gas volumetric flow rate at a location upstream of the control device, or duct static pressure at a location upstream (i.e., vacuum side) of the primary fan in each duct of each capture device or upstream of the fan that is common to multiple capture devices at or above the average gas volumetric flow rate or below the duct static pressure limit established in accordance with the performance test described in § 63.3546(g).

[68 FR 64446, Nov. 13, 2003, as amended at 71 FR 1384, Jan. 6, 2006]

Table 5 to Subpart KKKK of Part 63—Applicability of General Provisions to Subpart KKKK

You must comply with the applicable General Provisions requirements according to the following table:

Citation	Subject	Applicable to subpart KKKK	Explanation
§ 63.1(a)(1)–(4)	General Applicability	Yes.	
§ 63.1(a)(6)	Source Category Listing	Yes.	
§ 63.1(a)(10)–(12)	Timing and Overlap Clarifications	Yes.	
§ 63.1(b)(1)	Initial Applicability Determination	Yes	Applicability to subpart KKKK is also specified in § 63.3481.
§ 63.1(b)(3)	Applicability Determination Recordkeeping	Yes.	
§ 63.1(c)(1)	Applicability after Standard Established	Yes.	
§ 63.1(c)(2)	Applicability of Permit Program for Area Sources.	No	Area sources are not subject to subpart KKKK.
§ 63.1(c)(5)	Extensions and Notifications	Yes.	
§ 63.1(c)(6)	Reclassification	Yes.	
§ 63.1(e)	Applicability of Permit Program before Relevant Standard is Set.	Yes.	
§ 63.2	Definitions	Yes	Additional definitions are specified in § 63.3561.
§ 63.3	Units and Abbreviations	Yes.	
§ 63.4(a)(1)–(2)	Prohibited Activities	Yes.	
§ 63.4(b)–(c)	Circumvention/Fragmentation	Yes.	
§ 63.5(a)	Construction/Reconstruction	Yes.	
§ 63.5(b)(1), (3), (4), (6).	Requirements for Existing, Newly Constructed, and Reconstructed Sources.	Yes.	
§ 63.5(d)(1)(i)–(ii)(F), (d)(1)(ii)(H), (d)(1)(ii)(J), (d)(1)(iii), (d)(2)–(4).	Application for Approval of Construction/Reconstruction.	Yes.	
§ 63.5(e)	Approval of Construction/Reconstruction	Yes.	
§ 63.5(f)	Approval of Construction/Reconstruction Based on Prior State Review.	Yes.	
§ 63.6(a)	Compliance with Standards and Maintenance Requirements—Applicability.	Yes.	
§ 63.6(b)(1)–(5), (b)(7)	Compliance Dates for New and Reconstructed Sources.	Yes	Section 63.3483 specifies the compliance dates.
§ 63.6(c)(1), (2), (5)	Compliance Dates for Existing Sources	Yes	Section 63.3483 specifies the compliance dates.

sfrattini on LAPJZKW1R2 with $$_JOB
VerDate Sep<11>2014 09:16 Apr 04, 2023 Jkt 256165 PO 00000 Frm 00737 Fmt 8010 Sfmt 8002 Q:\40\256165.XXX PC31

Citation	Subject	Applicable to subpart KKKK	Explanation
§ 63.6(e)(1)(i)–(ii)	Operation and Maintenance	Yes before August 24, 2020, No on and after August 24, 2020.	See § 63.3500(b) for general duty requirement.
§ 63.6(e)(1)(iii)	Operation and Maintenance	Yes.	
§ 63.6(e)(3)(i), (e)(3)(iii)–(ix).	SSMP	Yes before August 24, 2020, No on and after August 24, 2020.	
§ 63.6(f)(1)	Compliance Except during Startup, Shutdown, and Malfunction.	Yes before August 24, 2020, No on and after August 24, 2020.	
§ 63.6(f)(2)–(3)	Methods for Determining Compliance	Yes.	
§ 63.6(g)	Use of an Alternative Standard	Yes.	
§ 63.6(h)	Compliance with Opacity/Visible Emission Standards.	No	Subpart KKKK does not establish opacity standards and does not require continuous opacity monitoring systems (COMS).
§ 63.6(i)(1)–(14)	Extension of Compliance	Yes.	
§ 63.6(i)(16)	Compliance Extensions and Administrator's Authority.	Yes.	
§ 63.6(j)	Presidential Compliance Exemption	Yes.	
§ 63.7(a)(1)	Performance Test Requirements—Applicability.	Yes	Applies to all affected sources. Additional requirements for performance testing are specified in §§ 63.3543, 63.3544, 63.3545, 63.3554, and 63.3555.
§ 63.7(a)(2) except (a)(2)(i)–(viii).	Performance Test Requirements—Dates	Yes	Applies only to performance tests for capture system and control device efficiency at sources using these to comply with the standards. Sections 63.3540 and 63.3550 specify the schedule for performance test requirements that are earlier than those specified in § 63.7(a)(2).
§ 63.7(a)(3)	Performance Tests Required by the Administrator.	Yes.	
§ 63.7(b)–(d)	Performance Test Requirements—Notification, Quality Assurance, Facilities Necessary for Safe Testing, Conditions During Test.	Yes	Applies only to performance tests for capture system and add-on control device efficiency at sources using these to comply with the standards.
§ 63.7(e)(1)	Conduct of Performance Tests	Yes before August 24, 2020, No on and after August 24, 2020.	See §§ 63.3543 and 63.3553.
§ 63.7(e)(2)–(4)	Conduct of Performance Tests	Yes.	
§ 63.7(f)	Performance Test Requirements—Use of Alternative Test Method.	Yes	Applies to all test methods except those used to determine capture system efficiency.
§ 63.7(g)–(h)	Performance Test Requirements—Data Analysis, Recordkeeping, Reporting, Waiver of Test.	Yes	Applies only to performance tests for capture system and add-on control device efficiency at sources using these to comply with the standards.
§ 63.8(a)(1)–(2)	Monitoring Requirements—Applicability	Yes	Applies only to monitoring of capture system and add-on control device efficiency at sources using these to comply with the standards. Additional requirements for monitoring are specified in §§ 63.3547 and 63.3557.
§ 63.8(a)(4)	Additional Monitoring Requirements	No	Subpart KKKK does not have monitoring requirements for flares.
§ 63.8(b)	Conduct of Monitoring	Yes.	

sfrattini on LAPJZKW1R2 with $$_JOB
VerDate Sep<11>2014 09:16 Apr 04, 2023 Jkt 256165 PO 00000 Frm 00738 Fmt 8010 Sfmt 8002 Q:\40\256165.XXX PC31

Citation	Subject	Applicable to subpart KKKK	Explanation
§ 63.8(c)(1)	Continuous Monitoring System (CMS) Operation and Maintenance.	Yes before August 24, 2020, No on and after August 24, 2020.	Sections 63.3547 and 63.3557 specify the requirements for the operation of CMS for capture systems and add-on control devices at sources using these to comply.
§ 63.8(c)(2)–(3)	CMS Operation and Maintenance	Yes	Applies only to monitoring of capture system and add-on control device efficiency at sources using these to comply with the standards. Additional requirements for CMS operations and maintenance are specified in §§ 63.3547 and 63.3557.
§ 63.8(c)(4)	CMS	No	Sections 63.3547 and 63.3557 specify the requirements for the operation of CMS for capture systems and add-on control devices at sources using these to comply.
§ 63.8(c)(5)	COMS	No	Subpart KKKK does not have opacity or visible emission standards.
§ 63.8(c)(6)	CMS Requirements	No	Sections 63.3547 and 63.3557 specify the requirements for monitoring systems for capture systems and add-on control devices at sources using these to comply.
§ 63.8(c)(7)	CMS Out-of-Control Periods	Yes.	
§ 63.8(c)(8)	CMS Out-of-Control Periods Reporting	No	Section 63.3511 requires reporting of CMS out of control periods.
§ 63.8(d)–(e)	Quality Control Program and CMS Performance Evaluation.	No.	
§ 63.8(f)(1)–(5)	Use of an Alternative Monitoring Method	Yes.	
§ 63.8(f)(6)	Alternative to Relative Accuracy Test	No	Section 63.8(f)(6) provisions are not applicable because subpart KKKK does not require CEMS.
§ 63.8(g)	Data Reduction	No	Sections 63.3542, 63.3547, 63.3552 and 63.3557 specify monitoring data reduction.
§ 63.9(a)	Notification Applicability	Yes.	
§ 63.9(b)(1)–(2)	Initial Notifications	Yes.	
§ 63.9(b)(4)(i), (b)(4)(v), (b)(5).	Application for Approval of Construction or Reconstruction.	Yes.	
§ 63.9(c)	Request for Extension of Compliance	Yes.	
§ 63.9(d)	Special Compliance Requirement Notification	Yes.	
§ 63.9(e)	Notification of Performance Test	Yes	Applies only to capture system and add-on control device performance tests at sources using these to comply with the standards.
§ 63.9(f)	Notification of Visible Emissions/Opacity Test	No	Subpart KKKK does not have opacity or visible emission standards.
§ 63.9(g)	Additional Notifications When Using CMS	No.	
§ 63.9(h)(1)–(3)	Notification of Compliance Status	Yes	Section 63.3510 specifies the dates for submitting the notification of compliance status.
§ 63.9(h)(5)–(6)	Clarifications	Yes.	
§ 63.9(i)	Adjustment of Submittal Deadlines	Yes.	
§ 63.9(j)	Change in Previous Information	Yes.	
§ 63.9(k)	Electronic reporting procedures	Yes	Only as specified in § 63.9(j).
§ 63.10(a)	Recordkeeping/Reporting—Applicability and General Information.	Yes.	
§ 63.10(b)(1)	General Recordkeeping Requirements	Yes	Additional requirements are specified in §§ 63.3512 and 63.3513.
§ 63.10(b)(2)(i)–(ii)	Recordkeeping of Occurrence and Duration of Startups and Shutdowns and of Failures to Meet Standards.	Yes before August 24, 2020, No on and after August 24, 2020.	See § 63.3512(i).
§ 63.10(b)(2)(iii)	Recordkeeping Relevant to Maintenance of Air Pollution Control and Monitoring Equipment.	Yes.	

sfrattini on LAPJZKW1R2 with $$_JOB
VerDate Sep<11>2014 09:16 Apr 04, 2023 Jkt 256165 PO 00000 Frm 00739 Fmt 8010 Sfmt 8002 Q:\40\256165.XXX PC31

Citation	Subject	Applicable to subpart KKKK	Explanation
§ 63.10(b)(2)(iv)–(v)	Actions Taken to Minimize Emissions During Startup, Shutdown, and Malfunction.	Yes before August 24, 2020, No on and after August 24, 2020.	See § 63.3512(i)(4) for a record of actions taken to minimize emissions duration a deviation from the standard.
§ 63.10(b)(2)(vi)	Recordkeeping for CMS Malfunctions	Yes before August 24, 2020, No on and after August 24, 2020.	See § 63.3512(i) for records of periods of deviation from the standard, including instances where a CMS is inoperative or out-of-control.
§ 63.10(b)(2) (vii)–(xii)	Records	Yes.	
§ 63.10(b)(2) (xiii)		No.	
§ 63.10(b)(2) (xiv)		Yes.	
§ 63.10(b)(3)	Recordkeeping Requirements for Applicability Determinations.	Yes.	
§ 63.10(c)(1)	Additional Recordkeeping Requirements for Sources with CMS.	Yes.	
§ 63.10(c)(5)–(6)		Yes.	
§ 63.10(c)(7)–(8)	Additional Recordkeeping Requirements for Sources with CMS.	No	See § 63.3512(i) for records of periods of deviation from the standard, including instances where a CMS is inoperative or out-of-control.
§ 63.10(c)(10)–(14)	Additional Recordkeeping Requirements for Sources with CMS.	Yes.	
§ 63.10(c)(15)	Records Regarding the Startup, Shutdown, and Malfunction Plan.	Yes before August 24, 2020, No on and after August 24, 2020.	
§ 63.10(d)(1)	General Reporting Requirements	Yes	Additional requirements are specified in § 63.3511.
§ 63.10(d)(2)	Report of Performance Test Results	Yes	Additional requirements are specified in § 63.3511(b).
§ 63.10(d)(3)	Reporting Opacity or Visible Emissions Observations.	No	Subpart KKKK does not require opacity or visible emissions observations.
§ 63.10(d)(4)	Progress Reports for Sources with Compliance Extensions.	Yes.	
§ 63.10(d)(5)	Startup, Shutdown, Malfunction Reports	Yes before August 24, 2020, No on and after August 24, 2020.	See § 63.3511(a)(7) and (8).
§ 63.10(e)(1)–(2)	Additional CMS Reports	No.	
§ 63.10(e)(3)	Excess Emissions/CMS Performance Reports.	No	Section 63.3511(b) specifies the contents of periodic compliance reports.
§ 63.10(e)(4)	COMS Data Reports	No	Subpart KKKK does not specify requirements for opacity or COMS.
§ 63.10(f)	Recordkeeping/Reporting Waiver	Yes.	
§ 63.11	Control Device Requirements/Flares	No	Subpart KKKK does not specify use of flares for compliance.
§ 63.12	State Authority and Delegations	Yes.	
§ 63.13(a)	Addresses	Yes before August 24, 2020, No on and after August 24, 2020.	
§ 63.13(b)	Submittal to State Agencies	Yes.	

sfrattini on LAPJZKW1R2 with $$_JOB
VerDate Sep<11>2014 09:16 Apr 04, 2023 Jkt 256165 PO 00000 Frm 00740 Fmt 8010 Sfmt 8002 Q:\40\256165.XXX PC31

Citation	Subject	Applicable to subpart KKKK	Explanation
§ 63.13(c)	Submittal to State Agencies	Yes before August 24, 2020, No unless the state requires the submittal via CEDRI, on and after August 24, 2020.	
§ 63.14	Incorporation by Reference	Yes.	
§ 63.15	Availability of Information/Confidentiality	Yes.	

[85 FR 10856, Feb. 25, 2020, as amended at 85 FR 73905, Nov. 19, 2020]

TABLE 6 TO SUBPART KKKK OF PART 63—DEFAULT ORGANIC HAP MASS FRACTION FOR SOLVENTS AND SOLVENT BLENDS

You may use the mass fraction values in the following table for solvent blends for which you do not have test data or manufacturer's formulation data.

Solvent/solvent blend	CAS. No.	Average organic HAP mass fraction	Typical organic HAP, percent by mass
1. Toluene	108–88–3	1.0	Toluene.
2. Xylene(s)	1330–20–7	1.0	Xylenes, ethylbenzene.
3. Hexane	110–54–3	0.5	n-hexane.
4. n-Hexane	110–54–3	1.0	n-hexane.
5. Ethylbenzene	100–41–4	1.0	Ethylbenzene.
6. Aliphatic 140		0	None.
7. Aromatic 100		0.02	1% Xylene, 1% cumene.
8. Aromatic 150		0.09	Naphthalene.
9. Aromatic naphtha	64742–95–6	0.02	1% Xylene, 1% cumene.
10. Aromatic solvent	64742–94–5	0.1	Naphthalene.
11. Exempt mineral spirits	8032–32–4	0	None.
12. Ligroines (VM & P)	8032–32–4	0	None.
13. Lactol spirits	64742–89–6	0.15	Toluene.
14. Low aromatic white spirit	64742–82–1	0	None.
15. Mineral spirits	64742–88–7	0.01	Xylenes.
16. Hydrotreated naphtha	64742–48–9	0	None.
17. Hydrotreated light distillate	64742–47–8	0.001	Toluene.
18. Stoddard solvent	8052–41–3	0.01	Xylenes.
19. Super high-flash naphtha	64742–95–6	0.05	Xylenes.
20. Varsol® solvent	8052–49–3	0.01	0.5% Xylenes, 0.5% ethylbenzene.
21. VM & P naphtha	64742–89–8	0.06	3% Toluene, 3% xylene.
22. Petroleum distillate mixture	68477–31–6	0.08	4% Naphthalene, 4% biphenyl.

TABLE 7 TO SUBPART KKKK OF PART 63—DEFAULT ORGANIC HAP MASS FRACTION FOR PETROLEUM SOLVENT GROUPS [A]

You may use the mass fraction values in the following table for solvent blends for which you do not have test data or manufacturer's formulation data.

Solvent type	Average organic HAP mass fraction	Typical organic HAP, percent by mass
Aliphatic [b]	0.03	1% Xylene, 1% toluene, and 1% ehylbenzene.
Aromatic [c]	0.06	4% Xylene, 1% toluene, and 1% ethylbenzene.

[a] Use this table only if the solvent blend does not match any of the solvent blends in Table 6 to this subpart and you only know whether the blend is aliphatic or aromatic.

[b] *E.g.,* Mineral Spirits 135, Mineral Spirits 150 EC, Naphtha, Mixed Hydrocarbon, Aliphatic Hydrocarbon, Aliphatic Naphtha, Naphthol Spirits, Petroleum Spirits, Petroleum Oil, Petroleum Naphtha, Solvent Naphtha, Solvent Blend.

[c] *E.g.,* Medium-flash Naphtha, High-flash Naphtha, Aromatic Naphtha, Light Aromatic Naphtha, Light Aromatic Hydrocarbons, Aromatic Hydrocarbons, Light Aromatic Solvent.

sfrattini on LAPJZKW1R2 with $$_JOB
VerDate Sep<11>2014 09:16 Apr 04, 2023 Jkt 256165 PO 00000 Frm 00741 Fmt 8010 Sfmt 8026 Q:\40\256165.XXX PC31

TABLE 8 TO SUBPART KKKK OF PART 63—LIST OF HAZARDOUS AIR POLLUTANTS THAT MUST BE COUNTED TOWARD TOTAL ORGANIC HAP CONTENT IF PRESENT AT 0.1 PERCENT OR MORE BY MASS

Chemical name	CAS No.
1,1,2,2-Tetrachloroethane	79–34–5
1,1,2-Trichloroethane	79–00–5
1,1-Dimethylhydrazine	57–14–7
1,2-Dibromo-3-chloropropane	96–12–8
1,2-Diphenylhydrazine	122–66–7
1,3-Butadiene	106–99–0
1,3-Dichloropropene	542–75–6
1,4-Dioxane	123–91–1
2,4,6-Trichlorophenol	88–06–2
2,4/2,6-Dinitrotoluene (mixture)	25321–14–6
2,4-Dinitrotoluene	121–14–2
2,4-Toluene diamine	95–80–7
2-Nitropropane	79–46–9
3,3′-Dichlorobenzidine	91–94–1
3,3′-Dimethoxybenzidine	119–90–4
3,3′-Dimethylbenzidine	119–93–7
4,4′-Methylene bis(2-chloroaniline)	101–14–4
Acetaldehyde	75–07–0
Acrylamide	79–06–1
Acrylonitrile	107–13–1
Allyl chloride	107–05–1
alpha-Hexachlorocyclohexane (a-HCH)	319–84–6
Aniline	62–53–3
Benzene	71–43–2
Benzidine	92–87–5
Benzotrichloride	98–07–7
Benzyl chloride	100–44–7
beta-Hexachlorocyclohexane (b-HCH)	319–85–7
Bis(2-ethylhexyl)phthalate	117–81–7
Bis(chloromethyl)ether	542–88–1
Bromoform	75–25–2
Captan	133–06–2
Carbon tetrachloride	56–23–5
Chlordane	57–74–9
Chlorobenzilate	510–15–6
Chloroform	67–66–3
Chloroprene	126–99–8
Cresols (mixed)	1319–77–3
DDE	3547–04–4
Dichloroethyl ether	111–44–4
Dichlorvos	62–73–7
Epichlorohydrin	106–89–8
Ethyl acrylate	140–88–5
Ethylene dibromide	106–93–4
Ethylene dichloride	107–06–2
Ethylene oxide	75–21–8
Ethylene thiourea	96–45–7
Ethylidene dichloride (1,1-Dichloroethane)	75–34–3
Formaldehyde	50–00–0
Heptachlor	76–44–8
Hexachlorobenzene	118–74–1
Hexachlorobutadiene	87–68–3
Hexachloroethane	67–72–1
Hydrazine	302–01–2
Isophorone	78–59–1
Lindane (hexachlorocyclohexane, all isomers)	58–89–9
m-Cresol	108–39–4
Methylene chloride	75–09–2
Naphthalene	91–20–3
Nitrobenzene	98–95–3
Nitrosodimethylamine	62–75–9
o-Cresol	95–48–7
o-Toluidine	95–53–4
Parathion	56–38–2
p-Cresol	106–44–5
p-Dichlorobenzene	106–46–7
Pentachloronitrobenzene	82–68–8
Pentachlorophenol	87–86–5
Propoxur	114–26–1
Propylene dichloride	78–87–5

sfrattini on LAPJZKW1R2 with $$_JOB
VerDate Sep<11>2014 09:16 Apr 04, 2023 Jkt 256165 PO 00000 Frm 00742 Fmt 8010 Sfmt 8002 Q:\40\256165.XXX PC31

Chemical name	CAS No.
Propylene oxide	75–56–9
Quinoline	91–22–5
Tetrachloroethene	127–18–4
Toxaphene	8001–35–2
Trichloroethylene	79–01–6
Trifluralin	1582–09–8
Vinyl bromide	593–60–2
Vinyl chloride	75–01–4
Vinylidene chloride	75–35–4

[85 FR 10860, Feb. 25, 2020]

Subpart MMMM—National Emission Standards for Hazardous Air Pollutants for Surface Coating of Miscellaneous Metal Parts and Products

SOURCE: 69 FR 157, Jan. 2, 2004, unless otherwise noted.

WHAT THIS SUBPART COVERS

§63.3880 What is the purpose of this subpart?

This subpart establishes national emission standards for hazardous air pollutants (NESHAP) for miscellaneous metal parts and products surface coating facilities. This subpart also establishes requirements to demonstrate initial and continuous compliance with the emission limitations.

§63.3881 Am I subject to this subpart?

(a) Miscellaneous metal parts and products include, but are not limited to, metal components of the following types of products as well as the products themselves: motor vehicle parts and accessories, bicycles and sporting goods, recreational vehicles, extruded aluminum structural components, railroad cars, heavy duty trucks, medical equipment, lawn and garden equipment, electronic equipment, magnet wire, steel drums, industrial machinery, metal pipes, and numerous other industrial, household, and consumer products. Except as provided in paragraph (c) of this section, the source category to which this subpart applies is the surface coating of any miscellaneous metal parts or products, as described in paragraph (a)(1) of this section, and it includes the subcategories listed in paragraphs (a)(2) through (6) of this section.

(1) Surface coating is the application of coating to a substrate using, for example, spray guns or dip tanks. When application of coating to a substrate occurs, then surface coating also includes associated activities, such as surface preparation, cleaning, mixing, and storage. However, these activities do not comprise surface coating if they are not directly related to the application of the coating. Coating application with handheld, non-refillable aerosol containers, touch-up markers, marking pens, or the application of paper film or plastic film which may be pre-coated with an adhesive by the manufacturer are not coating operations for the purposes of this subpart.

(2) The general use coating subcategory includes all surface coating operations that are not high performance, magnet wire, rubber-to-metal, or extreme performance fluoropolymer coating operations.

(3) The high performance coating subcategory includes surface coating operations that are performed using coatings that meet the definition of high performance architectural coating or high temperature coating in §63.3981.

(4) The magnet wire coating subcategory includes surface coating operations that are performed using coatings that meet the definition of magnet wire coatings in §63.3981.

(5) The rubber-to-metal coatings subcategory includes surface coating operations that are performed using coatings that meet the definition of rubber-to-metal coatings in §63.3981.

(6) The extreme performance fluoropolymer coatings subcategory includes surface coating operations that

sfrattini on LAPJZKW1R2 with $$_JOB
VerDate Sep<11>2014 09:16 Apr 04, 2023 Jkt 256165 PO 00000 Frm 00743 Fmt 8010 Sfmt 8010 Q:\40\256165.XXX PC31

are performed using coatings that meet the definition of extreme performance fluoropolymer coatings in § 63.3981.

(b) You are subject to this subpart if you own or operate a new, reconstructed, or existing affected source, as defined in § 63.3882, that uses 946 liters (250 gallons (gal)) per year, or more, of coatings that contain hazardous air pollutants (HAP) in the surface coating of miscellaneous metal parts and products defined in paragraph (a) of this section; and that is a major source, is located at a major source, or is part of a major source of emissions of HAP. A major source of HAP emissions is any stationary source or group of stationary sources located within a contiguous area and under common control that emits or has the potential to emit any single HAP at a rate of 9.07 megagrams (Mg) (10 tons) or more per year or any combination of HAP at a rate of 22.68 Mg (25 tons) or more per year. You do not need to include coatings that meet the definition of non-HAP coating contained in § 63.3981 in determining whether you use 946 liters (250 gal) per year, or more, of coatings in the surface coating of miscellaneous metal parts and products.

(c) This subpart does not apply to surface coating or a coating operation that meets any of the criteria of paragraphs (c)(1) through (17) of this section.

(1) A coating operation conducted at a facility where the facility uses only coatings, thinners and other additives, and cleaning materials that contain no organic HAP, as determined according to § 63.3941(a).

(2) Surface coating operations that occur at research or laboratory facilities, or is part of janitorial, building, and facility maintenance operations, or that occur at hobby shops that are operated for noncommercial purposes.

(3) Coatings used in volumes of less than 189 liters (50 gal) per year, provided that the total volume of coatings exempt under this paragraph does not exceed 946 liters (250 gal) per year at the facility.

(4) The surface coating of metal parts and products performed on-site at installations owned or operated by the Armed Forces of the United States (including the Coast Guard and the National Guard of any such State) or the National Aeronautics and Space Administration, or the surface coating of military munitions manufactured by or for the Armed Forces of the United States (including the Coast Guard and the National Guard of any such State).

(5) Surface coating where plastic is extruded onto metal wire or cable or metal parts or products to form a coating.

(6) Surface coating of metal components of wood furniture that meet the applicability criteria for wood furniture manufacturing (subpart JJ of this part).

(7) Surface coating of metal components of large appliances that meet the applicability criteria for large appliance surface coating (subpart NNNN of this part).

(8) Surface coating of metal components of metal furniture that meet the applicability criteria for metal furniture surface coating (subpart RRRR of this part).

(9) Surface coating of metal components of wood building products that meet the applicability criteria for wood building products surface coating (subpart QQQQ of this part).

(10) Surface coating of metal components of aerospace vehicles that meet the applicability criteria for aerospace manufacturing and rework (40 CFR part 63, subpart GG).

(11) Surface coating of metal parts intended for use in an aerospace vehicle or component using specialty coatings as defined in appendix A to subpart GG of this part.

(12) Surface coating of metal components of ships that meet the applicability criteria for shipbuilding and ship repair (subpart II of this part).

(13) Surface coating of metal using a web coating process that meets the applicability criteria for paper and other web coating (subpart JJJJ of this part).

(14) Surface coating of metal using a coil coating process that meets the applicability criteria for metal coil coating (subpart SSSS of this part).

(15) Surface coating of boats or metal parts of boats (including, but not limited to, the use of assembly adhesives) where the facility meets the applicability criteria for boat manufacturing

sfrattini on LAPJZKW1R2 with $$_JOB
VerDate Sep<11>2014 09:16 Apr 04, 2023 Jkt 256165 PO 00000 Frm 00744 Fmt 8010 Sfmt 8010 Q:\40\256165.XXX PC31

facilities (subpart VVVV of this part), except where the surface coating of the boat is a metal coating operation performed on personal watercraft or parts of personal watercraft. This subpart does apply to metal coating operations performed on personal watercraft and parts of personal watercraft.

(16) Surface coating of assembled on-road vehicles that meet the applicability criteria for the assembled on-road vehicle subcategory in plastic parts and products surface coating (40 CFR part 63, subpart PPPP).

(17) Surface coating of metal components of automobiles and light-duty trucks that meets the applicability criteria in §63.3082(b) for the Surface Coating of Automobiles and Light-Duty Trucks NESHAP (40 CFR part 63, subpart IIII) at a facility that meets the applicability criteria in §63.3081(b).

(d) If your facility meets the applicability criteria in §63.3081(b) of the Surface Coating of Automobiles and Light-Duty Trucks NESHAP (40 CFR part 63, subpart IIII), and you perform surface coating of metal parts or products that meets both the applicability criteria in §63.3082(c) and the applicability criteria of the Surface Coating of Miscellaneous Metal Parts and Products (40 CFR part 63, subpart MMMM), then for the surface coating of any or all of your metal parts or products that meets the applicability criteria in §63.3082(c), you may choose to comply with the requirements of subpart IIII of this part in lieu of complying with the Surface Coating of Miscellaneous Metal Parts and Products NESHAP. Surface coating operations on metal parts or products (e.g., parts for motorcycles or lawnmowers) not intended for use in automobiles, light-duty trucks, or other motor vehicles as defined in §63.3176 cannot be made part of your affected source under subpart IIII of this part.

(e) If you own or operate an affected source that meets the applicability criteria of this subpart and at the same facility you also perform surface coating that meets the applicability criteria of any other final surface coating NESHAP in this part you may choose to comply as specified in paragraph (e)(1), (2), or (3) of this section.

(1) You may have each surface coating operation that meets the applicability criteria of a separate NESHAP comply with that NESHAP separately.

(2) You may comply with the emission limitation representing the predominant surface coating activity at your facility, as determined according to paragraphs (e)(2)(i) and (ii) of this section. However, you may not establish high performance, rubber-to-metal, or extreme performance fluoropolymer coating operations as the predominant activity. You must not consider any surface coating activity that is subject to the Surface Coating of Automobiles and Light-Duty Trucks NESHAP (40 CFR part 63, subpart IIII) in determining the predominant surface coating activity at your facility.

(i) If a surface coating operation accounts for 90 percent or more of the surface coating activity at your facility (that is, the predominant activity), then compliance with the emission limitations of the predominant activity for all surface coating operations constitutes compliance with these and other applicable surface coating NESHAP. In determining predominant activity, you must include coating activities that meet the applicability criteria of other surface coating NESHAP and constitute more than 1 percent of total coating activities at your facility. Coating activities that meet the applicability criteria of other surface coating NESHAP but comprise less than 1 percent of coating activities need not be included in the determination of predominant activity but must be included in the compliance calculation.

(ii) You must use liters (gal) of solids used as a measure of relative surface coating activity over a representative period of operation. You may estimate the relative volume of coating solids used from parameters other than coating consumption and volume solids content (*e.g.*, design specifications for the parts or products coated and the number of items produced). The determination of predominant activity must accurately reflect current and projected coating operations and must be verifiable through appropriate documentation. The use of parameters

sfrattini on LAPJZKW1R2 with $$_JOB
VerDate Sep<11>2014 09:16 Apr 04, 2023 Jkt 256165 PO 00000 Frm 00745 Fmt 8010 Sfmt 8010 Q:\40\256165.XXX PC31

other than coating consumption and volume solids content must be approved by the Administrator. You may use data for any reasonable time period of at least 1 year in determining the relative amount of coating activity, as long as they represent the way the source will continue to operate in the future and are approved by the Administrator. You must determine the predominant activity at your facility and submit the results of that determination with the initial notification required by § 63.3910(b). You must also determine predominant activity annually and include the determination in the next semi-annual compliance report required by § 63.3920(a).

(3) You may comply with a facility-specific emission limit calculated from the relative amount of coating activity that is subject to each emission limit. If you elect to comply using the facility-specific emission limit alternative, then compliance with the facility-specific emission limit and the emission limitations in this subpart for all surface coating operations constitutes compliance with this and other applicable surface coating NESHAP. The procedures for calculating the facility-specific emission limit are specified in § 63.3890. In calculating a facility-specific emission limit, you must include coating activities that meet the applicability criteria of other surface coating NESHAP and constitute more than 1 percent of total coating activities at your facility. You must not consider any surface coating activity that is subject to the Surface Coating of Automobiles and Light-Duty Trucks NESHAP (40 CFR part 63, subpart IIII) in determining a facility-specific emission limit for your facility. Coating activities that meet the applicability criteria of other surface coating NESHAP but comprise less than 1 percent of total coating activities need not be included in the calculation of the facility-specific emission limit but must be included in the compliance calculations.

[69 FR 157, Jan. 2, 2004, as amended at 69 FR 22660, Apr. 26, 2004; 71 FR 76927, Dec. 22, 2006]

§ 63.3882 What parts of my plant does this subpart cover?

(a) This subpart applies to each new, reconstructed, and existing affected source within each of the four subcategories listed in § 63.3881(a).

(b) The affected source is the collection of all of the items listed in paragraphs (b)(1) through (4) of this section that are used for surface coating of miscellaneous metal parts and products within each subcategory.

(1) All coating operations as defined in § 63.3981;

(2) All storage containers and mixing vessels in which coatings, thinners and/or other additives, and cleaning materials are stored or mixed;

(3) All manual and automated equipment and containers used for conveying coatings, thinners and/or other additives, and cleaning materials; and

(4) All storage containers and all manual and automated equipment and containers used for conveying waste materials generated by a coating operation.

(c) An affected source is a new affected source if you commenced its construction after August 13, 2002 and the construction is of a completely new miscellaneous metal parts and products surface coating facility where previously no miscellaneous metal parts and products surface coating facility had existed.

(d) An affected source is reconstructed if it meets the criteria as defined in § 63.2.

(e) An affected source is existing if it is not new or reconstructed.

§ 63.3883 When do I have to comply with this subpart?

The date by which you must comply with this subpart is called the compliance date. The compliance date for each type of affected source is specified in paragraphs (a) through (c) of this section. The compliance date begins the initial compliance period during which you conduct the initial compliance demonstration described in §§ 63.3940, 63.3950, and 63.3960.

(a) For a new or reconstructed affected source, the compliance date is the applicable date in paragraph (a)(1) or (2) of this section:

sfrattini on LAPJZKW1R2 with $$_JOB
VerDate Sep<11>2014 09:16 Apr 04, 2023 Jkt 256165 PO 00000 Frm 00746 Fmt 8010 Sfmt 8010 Q:\40\256165.XXX PC31

(1) If the initial startup of your new or reconstructed affected source is before January 2, 2004, the compliance date is January 2, 2004.

(2) If the initial startup of your new or reconstructed affected source occurs after January 2, 2004, the compliance date is the date of initial startup of your affected source.

(b) For an existing affected source, the compliance date is the date 3 years after January 2, 2004.

(c) For an area source that increases its emissions or its potential to emit such that it becomes a major source of HAP emissions, the compliance date is specified in paragraphs (c)(1) and (2) of this section.

(1) For any portion of the source that becomes a new or reconstructed affected source subject to this subpart, the compliance date is the date of initial startup of the affected source or January 2, 2004, whichever is later.

(2) For any portion of the source that becomes an existing affected source subject to this subpart, the compliance date is the date 1 year after the area source becomes a major source or 3 years after January 2, 2004, whichever is later.

(d) You must meet the notification requirements in § 63.3910 according to the dates specified in that section and in subpart A of this part. Some of the notifications must be submitted before the compliance dates described in paragraphs (a) through (c) of this section.

EMISSION LIMITATIONS

§ 63.3890 What emission limits must I meet?

(a) For a new or reconstructed affected source, you must limit organic HAP emissions to the atmosphere from the affected source to the applicable limit specified in paragraphs (a)(1) through (5) of this section, except as specified in paragraph (c) of this section, determined according to the requirements in § 63.3941, § 63.3951, or § 63.3961.

(1) For each new general use coating affected source, limit organic HAP emissions to no more than 0.23 kilograms (kg) (1.9 pound (lb)) organic HAP per liter (gal) coating solids used during each 12-month compliance period.

(2) For each new high performance coating affected source, limit organic HAP emissions to no more than 3.3 kg (27.5 lb) organic HAP per liter (gal) coating solids used during each 12-month compliance period.

(3) For each new magnet wire coating affected source, limit organic HAP emissions to no more than 0.050 kg (0.44 lb) organic HAP per liter (gal) coating solids used during each 12-month compliance period.

(4) For each new rubber-to-metal coating affected source, limit organic HAP emissions to no more than 0.81 kg (6.8 lb) organic HAP per liter (gal) coating solids used during each 12-month compliance period.

(5) For each new extreme performance fluoropolymer coating affected source, limit organic HAP emissions to no more than 1.5 kg (12.4 lb) organic HAP per liter (gal) coating solids used during each 12-month compliance period.

(b) For an existing affected source, you must limit organic HAP emissions to the atmosphere from the affected source to the applicable limit specified in paragraphs (b)(1) through (5) of this section, except as specified in paragraph (c) of this section, determined according to the requirements in § 63.3941, § 63.3951, or § 63.3961.

(1) For each existing general use coating affected source, limit organic HAP emissions to no more than 0.31 kg (2.6 lb) organic HAP per liter (gal) coating solids used during each 12-month compliance period.

(2) For each existing high performance coating affected source, limit organic HAP emissions to no more than 3.3 kg (27.5 lb) organic HAP per liter (gal) coating solids used during each 12-month compliance period.

(3) For each existing magnet wire coating affected source, limit organic HAP emissions to no more than 0.12 kg (1.0 lb) organic HAP per liter (gal) coating solids used during each 12-month compliance period.

(4) For each existing rubber-to-metal coating affected source, limit organic HAP emissions to no more than 4.5 kg (37.7 lb) organic HAP per liter (gal) coating solids used during each 12-month compliance period.

sfrattini on LAPJZKW1R2 with $$_JOB
VerDate Sep<11>2014 09:16 Apr 04, 2023 Jkt 256165 PO 00000 Frm 00747 Fmt 8010 Sfmt 8010 Q:\40\256165.XXX PC31

(5) For each existing extreme performance fluoropolymer coating affected source, limit organic HAP emissions to no more than 1.5 kg (12.4 lbs) organic HAP per liter (gal) coating solids used during each 12-month compliance period.

(c) If your facility's surface coating operations meet the applicability criteria of more than one of the subcategory emission limits specified in paragraphs (a) or (b) of this section, you may comply separately with each subcategory emission limit or comply using one of the alternatives in paragraph (c)(1) or (2) of this section.

(1) If the general use or magnet wire surface coating operations subject to only one of the emission limits specified in paragraphs (a)(1), (3), (b)(1), or (3) of this section account for 90 percent or more of the surface coating activity at your facility (*i.e.*, it is the predominant activity at your facility), then compliance with that one emission limitations in this subpart for all surface coating operations constitutes compliance with the other applicable emission limits. You must use liters (gal) of solids used as a measure of relative surface coating activity over a representative period of operation. You may estimate the relative volume of coating solids used from parameters other than coating consumption and volume solids content (*e.g.*, design specifications for the parts or products coated and the number of items produced). The determination of predominant activity must accurately reflect current and projected coating operations and must be verifiable through appropriate documentation. The use of parameters other than coating consumption and volume solids content must be approved by the Administrator. You may use data for any reasonable time period of at least 1 year in determining the relative amount of coating activity, as long as they represent the way the source will continue to operate in the future and are approved by the Administrator. You must determine the predominant activity at your facility and submit the results of that determination with the initial notification required by § 63.3910(b). Additionally, you must determine the facility's predominant activity annually and include the determination in the next semi-annual compliance report required by § 63.3920(a).

(2) You may calculate and comply with a facility-specific emission limit as described in paragraphs (c)(2)(i) through (iii) of this section. If you elect to comply using the facility-specific emission limit alternative, then compliance with the facility-specific emission limit and the emission limitations in this subpart for all surface coating operations constitutes compliance with this and other applicable surface coating NESHAP. In calculating a facility-specific emission limit, you must include coating activities that meet the applicability criteria of the other subcategories and constitute more than 1 percent of total coating activities. Coating activities that meet the applicability criteria of other surface coating NESHAP but comprise less than 1 percent of coating activities need not be included in the determination of predominant activity but must be included in the compliance calculation.

(i) You are required to calculate the facility-specific emission limit for your facility when you submit the notification of compliance status required in § 63.3910(c), and on a monthly basis afterward using the coating data for the relevant 12-month compliance period.

(ii) Use Equation 1 of this section to calculate the facility-specific emission limit for your surface coating operations for each 12-month compliance period.

sfrattini on LAPJZKW1R2 with $$_JOB
VerDate Sep<11>2014 09:16 Apr 04, 2023 Jkt 256165 PO 00000 Frm 00748 Fmt 8010 Sfmt 8010 Q:\40\256165.XXX PC31

$$\text{Facility - Specific Emission Limit} = \frac{\sum_{i=1}^{n}(\text{Limit}_i)(\text{Solids}_i)}{\sum_{i=1}^{n}(\text{Solids}_i)} \qquad \text{(Eq. 1)}$$

Where:

Facility-specific emission limit = Facility-specific emission limit for each 12-month compliance period, kg (lb) organic HAP per kg (lb) coating solids used.

Limit_i = The new source or existing source emission limit applicable to coating operation, i, included in the facility-specific emission limit, converted to kg (lb) organic HAP per kg (lb) coating solids used, if the emission limit is not already in those units. All emission limits included in the facility-specific emission limit must be in the same units.

Solids_i = The liters (gal) of solids used in coating operation, i, in the 12-month compliance period that is subject to emission limit, i. You may estimate the volume of coating solids used from parameters other than coating consumption and volume solids content (*e.g.*, design specifications for the parts or products coated and the number of items produced). The use of parameters other than coating consumption and volume solids content must be approved by the Administrator.

n = The number of different coating operations included in the facility-specific emission limit.

(iii) If you need to convert an emission limit in another surface coating NESHAP from kg (lb) organic HAP per kg (lb) coating solids used to kg (lb) organic HAP per liter (gal) coating solids used, you must use the default solids density of 1.26 kg solids per liter coating solids (10.5 lb solids per gal solids).

§63.3891 What are my options for meeting the emission limits?

You must include all coatings (as defined in §63.3981), thinners and/or other additives, and cleaning materials used in the affected source when determining whether the organic HAP emission rate is equal to or less than the applicable emission limit in §63.3890. To make this determination, you must use at least one of the three compliance options listed in paragraphs (a) through (c) of this section. You may apply any of the compliance options to an individual coating operation, or to multiple coating operations as a group, or to the entire affected source. You may use different compliance options for different coating operations, or at different times on the same coating operation. You may employ different compliance options when different coatings are applied to the same part, or when the same coating is applied to different parts. However, you may not use different compliance options at the same time on the same coating operation. If you switch between compliance options for any coating operation or group of coating operations, you must document this switch as required by §63.3930(c), and you must report it in the next semiannual compliance report required in §63.3920.

(a) *Compliant material option*. Demonstrate that the organic HAP content of each coating used in the coating operation(s) is less than or equal to the applicable emission limit in §63.3890, and that each thinner and/or other additive, and cleaning material used contains no organic HAP. You must meet all the requirements of §§63.3940, 63.3941, and 63.3942 to demonstrate compliance with the applicable emission limit using this option.

(b) *Emission rate without add-on controls option*. Demonstrate that, based on the coatings, thinners and/or other additives, and cleaning materials used in the coating operation(s), the organic HAP emission rate for the coating operation(s) is less than or equal to the applicable emission limit in §63.3890, calculated as a rolling 12-month emission rate and determined on a monthly basis. You must meet all the requirements of §§63.3950, 63.3951, and 63.3952 to demonstrate compliance with the emission limit using this option.

(c) *Emission rate with add-on controls option*. Demonstrate that, based on the coatings, thinners and/or other additives, and cleaning materials used in

sfrattini on LAPJZKW1R2 with $$_JOB
VerDate Sep<11>2014 09:16 Apr 04, 2023 Jkt 256165 PO 00000 Frm 00749 Fmt 8010 Sfmt 8010 Q:\40\256165.XXX PC31
ER02JA04.002</MATH>

the coating operation(s), and the emissions reductions achieved by emission capture systems and add-on controls, the organic HAP emission rate for the coating operation(s) is less than or equal to the applicable emission limit in § 63.3890, calculated as a rolling 12-month emission rate and determined on a monthly basis. If you use this compliance option, you must also demonstrate that all emission capture systems and add-on control devices for the coating operation(s) meet the operating limits required in § 63.3892, except for solvent recovery systems for which you conduct liquid-liquid material balances according to § 63.3961(j), and that you meet the work practice standards required in § 63.3893. You must meet all the requirements of §§ 63.3960 through 63.3968 to demonstrate compliance with the emission limits, operating limits, and work practice standards using this option.

§ 63.3892 What operating limits must I meet?

(a) For any coating operation(s) on which you use the compliant material option or the emission rate without add-on controls option, you are not required to meet any operating limits.

(b) For any controlled coating operation(s) on which you use the emission rate with add-on controls option, except those for which you use a solvent recovery system and conduct a liquid-liquid material balance according to § 63.3961(j), you must meet the operating limits specified in Table 1 to this subpart. These operating limits apply to the emission capture and control systems on the coating operation(s) for which you use this option, and you must establish the operating limits during the performance test according to the requirements in § 63.3967. You must meet the operating limits at all times after you establish them.

(c) If you use an add-on control device other than those listed in Table 1 to this subpart, or wish to monitor an alternative parameter and comply with a different operating limit, you must apply to the Administrator for approval of alternative monitoring under § 63.8(f).

§ 63.3893 What work practice standards must I meet?

(a) For any coating operation(s) on which you use the compliant material option or the emission rate without add-on controls option, you are not required to meet any work practice standards.

(b) If you use the emission rate with add-on controls option, you must develop and implement a work practice plan to minimize organic HAP emissions from the storage, mixing, and conveying of coatings, thinners and/or other additives, and cleaning materials used in, and waste materials generated by the controlled coating operation(s) for which you use this option; or you must meet an alternative standard as provided in paragraph (c) of this section. The plan must specify practices and procedures to ensure that, at a minimum, the elements specified in paragraphs (b)(1) through (5) of this section are implemented.

(1) All organic-HAP-containing coatings, thinners and/or other additives, cleaning materials, and waste materials must be stored in closed containers.

(2) Spills of organic-HAP-containing coatings, thinners and/or other additives, cleaning materials, and waste materials must be minimized.

(3) Organic-HAP-containing coatings, thinners and/or other additives, cleaning materials, and waste materials must be conveyed from one location to another in closed containers or pipes.

(4) Mixing vessels which contain organic-HAP-containing coatings and other materials must be closed except when adding to, removing, or mixing the contents.

(5) Emissions of organic HAP must be minimized during cleaning of storage, mixing, and conveying equipment.

(c) As provided in § 63.6(g), we, the U.S. Environmental Protection Agency, may choose to grant you permission to use an alternative to the work practice standards in this section.

sfrattini on LAPJZKW1R2 with $$_JOB
VerDate Sep<11>2014 09:16 Apr 04, 2023 Jkt 256165 PO 00000 Frm 00750 Fmt 8010 Sfmt 8010 Q:\40\256165.XXX PC31

GENERAL COMPLIANCE REQUIREMENTS

§ 63.3900 What are my general requirements for complying with this subpart?

(a) You must be in compliance with the emission limitations in this subpart as specified in paragraphs (a)(1) and (2) of this section.

(1) Any coating operation(s) for which you use the compliant material option or the emission rate without add-on controls option, as specified in § 63.3891(a) and (b), must be in compliance with the applicable emission limit in § 63.3890 at all times.

(2) Any coating operation(s) for which you use the emission rate with add-on controls option, as specified in § 63.3891(c), must be in compliance with the emission limitations as specified in paragraphs (a)(2)(i) through (iii) of this section.

(i) Before January 5, 2021, the coating operation(s) must be in compliance with the applicable emission limit in § 63.3890 at all times except during periods of SSM. On or after January 5, 2021, you must be in compliance with the applicable emission limits in § 63. 3890 and the operating limits in table 1 of this subpart at all times.

(ii) Before January 5, 2021, the coating operation(s) must be in compliance with the operating limits for emission capture systems and add-on control devices required by § 63.3892 at all times except during periods of SSM and except for solvent recovery systems for which you conduct liquid-liquid material balances according to § 63.3961(j). On or after January 5, 2021, the coating operation(s) must be in compliance with the operating limits for emission capture systems and add-on control devices required by § 63.3892 at all times, except for solvent recovery systems for which you conduct liquid-liquid material balances according to § 63.3961(j).

(iii) The coating operation(s) must be in compliance with the work practice standards in § 63.3893 at all times.

(b) Before January 5, 2021, you must always operate and maintain your affected source, including all air pollution control and monitoring equipment you use for purposes of complying with this subpart, according to the provisions in § 63.6(e)(1)(i). On and after January 5, 2021, at all times, the owner or operator must operate and maintain any affected source, including associated air pollution control equipment and monitoring equipment, in a manner consistent with safety and good air pollution control practices for minimizing emissions. The general duty to minimize emissions does not require the owner or operator to make any further efforts to reduce emissions if levels required by the applicable standard have been achieved. Determination of whether a source is operating in compliance with operation and maintenance requirements will be based on information available to the Administrator that may include, but is not limited to, monitoring results, review of operation and maintenance procedures, review of operation and maintenance records, and inspection of the affected source.

(c) Before January 5, 2021, if your affected source uses an emission capture system and add-on control device, you must develop a written SSMP according to the provisions in § 63.6(e)(3). The plan must address the startup, shutdown, and corrective actions in the event of a malfunction of the emission capture system or the add-on control device. The plan must also address any coating operation equipment that may cause increased emissions or that would affect capture efficiency if the process equipment malfunctions, such as conveyors that move parts among enclosures. On and after January 5, 2021, the SSMP is not required.

[69 FR 157, Jan. 2, 2004, as amended at 71 FR 20465, Apr. 20, 2006; 85 FR 41138, July 8, 2020]

§ 63.3901 What parts of the General Provisions apply to me?

Table 2 to this subpart shows which parts of the General Provisions in §§ 63.1 through 63.15 apply to you.

NOTIFICATIONS, REPORTS, AND RECORDS

§ 63.3910 What notifications must I submit?

(a) *General.* You must submit the notifications in §§ 63.7(b) and (c), 63.8(f)(4), and 63.9(b) through (e) and (h) that apply to you by the dates specified in those sections, except as provided in paragraphs (b) and (c) of this section.

sfrattini on LAPJZKW1R2 with $$_JOB
VerDate Sep<11>2014 09:16 Apr 04, 2023 Jkt 256165 PO 00000 Frm 00751 Fmt 8010 Sfmt 8010 Q:\40\256165.XXX PC31

(b) *Initial notification.* You must submit the initial notification required by § 63.9(b) for a new or reconstructed affected source no later than 120 days after initial startup, 120 days after January 2, 2004, or no later than 120 days after the source becomes subject to this subpart, whichever is later. For an existing affected source, you must submit the initial notification no later than 1 year after January 2, 2004, or no later than 120 days after the source becomes subject to this subpart, whichever is later. If you are using compliance with the Surface Coating of Automobiles and Light-Duty Trucks NESHAP (subpart IIII of this part) as provided for under § 63.3881(d) to constitute compliance with this subpart for any or all of your metal parts coating operations, then you must include a statement to this effect in your initial notification, and no other notifications are required under this subpart in regard to those metal parts coating operations. If you are complying with another NESHAP that constitutes the predominant activity at your facility under § 63.3881(e)(2) to constitute compliance with this subpart for your metal parts coating operations, then you must include a statement to this effect in your initial notification, and no other notifications are required under this subpart in regard to those metal parts coating operations. If you own or operate an existing loop slitter or flame lamination affected source, submit an initial notification no later than 120 days after April 14, 2003, or no later than 120 days after the source becomes subject to this subpart.

(c) *Notification of compliance status.* You must submit the notification of compliance status required by § 63.9(h) no later than 30 calendar days following the end of the initial compliance period described in § 63.3940, § 63.3950, or § 63.3960 that applies to your affected source. The notification of compliance status must contain the information specified in paragraphs (c)(1) through (11) of this section and in § 63.9(h).

(1) Company name and address.

(2) Statement by a responsible official with that official's name, title, and signature, certifying the truth, accuracy, and completeness of the content of the report.

(3) Date of the report and beginning and ending dates of the reporting period. The reporting period is the initial compliance period described in § 63.3940, § 63.3950, or § 63.3960 that applies to your affected source.

(4) Identification of the compliance option or options specified in § 63.3891 that you used on each coating operation in the affected source during the initial compliance period.

(5) Statement of whether or not the affected source achieved the emission limitations for the initial compliance period.

(6) If you had a deviation, include the information in paragraphs (c)(6)(i) and (ii) of this section.

(i) A description and statement of the cause of the deviation.

(ii) If you failed to meet the applicable emission limit in § 63.3890, include all the calculations you used to determine the kg (lb) of organic HAP emitted per liter (gal) coating solids used. You do not need to submit information provided by the materials' suppliers or manufacturers, or test reports.

(7) For each of the data items listed in paragraphs (c)(7)(i) through (iv) of this section that is required by the compliance option(s) you used to demonstrate compliance with the emission limit, include an example of how you determined the value, including calculations and supporting data. Supporting data may include a copy of the information provided by the supplier or manufacturer of the example coating or material, or a summary of the results of testing conducted according to § 63.3941(a), (b), or (c). You do not need to submit copies of any test reports.

(i) Mass fraction of organic HAP for one coating, for one thinner and/or other additive, and for one cleaning material.

(ii) Volume fraction of coating solids for one coating.

(iii) Density for one coating, one thinner and/or other additive, and one leaning material, except that if you use the compliant material option, only the example coating density is required.

(iv) The amount of waste materials and the mass of organic HAP contained

sfrattini on LAPJZKW1R2 with $$_JOB
VerDate Sep<11>2014 09:16 Apr 04, 2023 Jkt 256165 PO 00000 Frm 00752 Fmt 8010 Sfmt 8010 Q:\40\256165.XXX PC31

in the waste materials for which you are claiming an allowance in Equation 1 of § 63.3951.

(8) The calculation of kg (lb) of organic HAP emitted per liter (gal) coating solids used for the compliance option(s) you used, as specified in paragraphs (c)(8)(i) through (iii) of this section.

(i) For the compliant material option, provide an example calculation of the organic HAP content for one coating, using Equation 2 of § 63.3941.

(ii) For the emission rate without add-on controls option, provide the calculation of the total mass of organic HAP emissions for each month; the calculation of the total volume of coating solids used each month; and the calculation of the 12-month organic HAP emission rate using Equations 1 and 1A through 1C, 2, and 3, respectively, of § 63.3951.

(iii) For the emission rate with add-on controls option, provide the calculation of the total mass of organic HAP emissions for the coatings, thinners and/or other additives, and cleaning materials used each month, using Equations 1 and 1A through 1C of § 63.3951; the calculation of the total volume of coating solids used each month using Equation 2 of § 63.3951; the mass of organic HAP emission reduction each month by emission capture systems and add-on control devices using Equations 1 and 1A through 1D of § 63.3961 and Equations 2, 3, and 3A through 3C of § 63.3961 as applicable; the calculation of the total mass of organic HAP emissions each month using Equation 4 of § 63.3961; and the calculation of the 12-month organic HAP emission rate using Equation 5 of § 63.3961.

(9) For the emission rate with add-on controls option, you must include the information specified in paragraphs (c)(9)(i) through (iv) of this section, except that the requirements in paragraphs (c)(9)(i) through (iii) of this section do not apply to solvent recovery systems for which you conduct liquid-liquid material balances according to § 63.3961(j).

(i) For each emission capture system, a summary of the data and copies of the calculations supporting the determination that the emission capture system is a permanent total enclosure (PTE) or a measurement of the emission capture system efficiency. Include a description of the protocol followed for measuring capture efficiency, summaries of any capture efficiency tests conducted, and any calculations supporting the capture efficiency determination. If you use the data quality objective (DQO) or lower confidence limit (LCL) approach, you must also include the statistical calculations to show you meet the DQO or LCL criteria in appendix A to subpart KK of this part. You do not need to submit complete test reports.

(ii) A summary of the results of each add-on control device performance test. You do not need to submit complete test reports.

(iii) A list of each emission capture system's and add-on control device's operating limits and a summary of the data used to calculate those limits.

(iv) A statement of whether or not you developed and implemented the work practice plan required by § 63.3893.

(10) If you are complying with a single emission limit representing the predominant activity under § 63.3890(c)(1), include the calculations and supporting information used to demonstrate that this emission limit represents the predominant activity as specified in § 63.3890(c)(1).

(11) If you are complying with a facility-specific emission limit under § 63.3890(c)(2), include the calculation of the facility-specific emission limit and any supporting information as specified in § 63.3890(c)(2).

[69 FR 157, Jan. 2, 2004, as amended at 69 FR 22660, Apr. 26, 2004; 85 FR 73906, Nov. 19, 2020]

§ 63.3920 What reports must I submit?

(a) *Semiannual compliance reports.* You must submit semiannual compliance reports for each affected source according to the requirements of paragraphs (a)(1) through (7) of this section. The semiannual compliance reporting requirements may be satisfied by reports required under other parts of the Clean Air Act (CAA), as specified in paragraph (a)(2) of this section.

(1) *Dates.* Unless the Administrator has approved or agreed to a different schedule for submission of reports under § 63.10(a), you must prepare and

sfrattini on LAPJZKW1R2 with $$_JOB
VerDate Sep<11>2014 09:16 Apr 04, 2023 Jkt 256165 PO 00000 Frm 00753 Fmt 8010 Sfmt 8010 Q:\40\256165.XXX PC31

submit each semiannual compliance report according to the dates specified in paragraphs (a)(1)(i) through (iv) of this section. Note that the information reported for each of the months in the reporting period will be based on the last 12 months of data prior to the date of each monthly calculation.

(i) The first semiannual compliance report must cover the first semiannual reporting period which begins the day after the end of the initial compliance period described in § 63.3940, § 63.3950, or § 63.3960 that applies to your affected source and ends on June 30 or December 31, whichever date is the first date following the end of the initial compliance period.

(ii) Each subsequent semiannual compliance report must cover the subsequent semiannual reporting period from January 1 through June 30 or the semiannual reporting period from July 1 through December 31.

(iii) Each semiannual compliance report must be postmarked or delivered no later than July 31 or January 31, whichever date is the first date following the end of the semiannual reporting period.

(iv) For each affected source that is subject to permitting regulations pursuant to 40 CFR part 70 or 40 CFR part 71, and if the permitting authority has established dates for submitting semiannual reports pursuant to 40 CFR 70.6(a)(3)(iii)(A) or 40 CFR 71.6(a)(3)(iii)(A), you may submit the first and subsequent compliance reports according to the dates the permitting authority has established instead of according to the date specified in paragraph (a)(1)(iii) of this section.

(2) *Inclusion with title V report.* Each affected source that has obtained a title V operating permit pursuant to 40 CFR part 70 or 40 CFR part 71 must report all deviations as defined in this subpart in the semiannual monitoring report required by 40 CFR 70.6(a)(3)(iii)(A) or 40 CFR 71.6(a)(3)(iii)(A). If an affected source submits a semiannual compliance report pursuant to this section along with, or as part of, the semiannual monitoring report required by 40 CFR 70.6(a)(3)(iii)(A) or 40 CFR 71.6(a)(3)(iii)(A), and the semiannual compliance report includes all required information concerning deviations from any emission limitation in this subpart, its submission will be deemed to satisfy any obligation to report the same deviations in the semiannual monitoring report. However, submission of a semiannual compliance report shall not otherwise affect any obligation the affected source may have to report deviations from permit requirements to the permitting authority.

(3) *General requirements.* The semiannual compliance report must contain the information specified in paragraphs (a)(3)(i) through (vii) of this section, and the information specified in paragraphs (a)(4) through (7) and (c)(1) of this section that is applicable to your affected source.

(i) Company name and address.

(ii) Statement by a responsible official with that official's name, title, and signature, certifying the truth, accuracy, and completeness of the content of the report.

(iii) Date of report and beginning and ending dates of the reporting period. The reporting period is the 6-month period ending on June 30 or December 31. Note that the information reported for each of the 6 months in the reporting period will be based on the last 12 months of data prior to the date of each monthly calculation.

(iv) Identification of the compliance option or options specified in § 63.3891 that you used on each coating operation during the reporting period. If you switched between compliance options during the reporting period, you must report the beginning and ending dates for each option you used.

(v) If you used the emission rate without add-on controls or the emission rate with add-on controls compliance option (§ 63.3891(b) or (c)), the calculation results for each rolling 12-month organic HAP emission rate during the 6-month reporting period.

(vi) If you used the predominant activity alternative (§ 63.3890(c)(1)), include the annual determination of predominant activity if it was not included in the previous semi-annual compliance report.

(vii) If you used the facility-specific emission limit alternative (§ 63.3890(c)(2)), include the calculation of the facility-specific emission limit

sfrattini on LAPJZKW1R2 with $$_JOB
VerDate Sep<11>2014 09:16 Apr 04, 2023 Jkt 256165 PO 00000 Frm 00754 Fmt 8010 Sfmt 8010 Q:\40\256165.XXX PC31

for each 12-month compliance period during the 6-month reporting period.

(4) *No deviations*. If there were no deviations from the emission limitations in §§63.3890, 63.3892, and 63.3893 that apply to you, the semiannual compliance report must include a statement that there were no deviations from the emission limitations during the reporting period. If you used the emission rate with add-on controls option and there were no periods during which the continuous parameter monitoring systems (CPMS) were out-of-control as specified in §63.8(c)(7), the semiannual compliance report must include a statement that there were no periods during which the CPMS were out-of-control during the reporting period.

(5) *Deviations: Compliant material option*. If you used the compliant material option and there was a deviation from the applicable organic HAP content requirements in §63.3890, the semiannual compliance report must contain the information in paragraphs (a)(5)(i) through (v) of this section.

(i) Identification of each coating used that deviated from the applicable emission limit, and each thinner and/or other additive, and cleaning material used that contained organic HAP, and the dates, time and duration each was used.

(ii) The calculation of the organic HAP content (using Equation 2 of §63.3941) for each coating identified in paragraph (a)(5)(i) of this section. You do not need to submit background data supporting this calculation (*e.g.*, information provided by coating suppliers or manufacturers, or test reports).

(iii) The determination of mass fraction of organic HAP for each thinner and/or other additive, and cleaning material identified in paragraph (a)(5)(i) of this section. You do not need to submit background data supporting this calculation (*e.g.*, information provided by material suppliers or manufacturers, or test reports).

(iv) Before January 5, 2021, a statement of the cause of each deviation. On and after January 5, 2021, a statement of the cause of each deviation (including unknown cause, if applicable).

(v) On and after January 5, 2021, the number of deviations and, for each deviation, a list of the affected source or equipment, an estimate of the quantity of each regulated pollutant emitted over any applicable emission limit in §63.3890, a description of the method used to estimate the emissions, and the actions you took to minimize emissions in accordance with §63.3900(b).

(6) *Deviations: Emission rate without add-on controls option*. If you used the emission rate without add-on controls option and there was a deviation from the applicable emission limit in §63.3890, the semiannual compliance report must contain the information in paragraphs (a)(6)(i) through (iv) of this section.

(i) The beginning and ending dates of each compliance period during which the 12-month organic HAP emission rate exceeded the applicable emission limit in §63.3890.

(ii) The calculations used to determine the 12-month organic HAP emission rate for the compliance period in which the deviation occurred. You must submit the calculations for Equations 1, 1A through 1C, 2, and 3 of §63.3951; and if applicable, the calculation used to determine mass of organic HAP in waste materials according to §63.3951(e)(4). You do not need to submit background data supporting these calculations (*e.g.*, information provided by materials suppliers or manufacturers, or test reports).

(iii) Before January 5, 2021, a statement of the cause of each deviation. On and after January 5, 2021, a statement of the cause of each deviation (including unknown cause, if applicable).

(iv) On and after January 5, 2021, the number of deviations and, for each deviation, the date, time, duration, a list of the affected source or equipment, an estimate of the quantity of each regulated pollutant emitted over any applicable emission limit in §63.3890, a description of the method used to estimate the emissions, and the actions you took to minimize emissions in accordance with §63.3900(b).

(7) *Deviations: Emission rate with add-on controls option*. If you used the emission rate with add-on controls option and there was a deviation from the applicable emission limit in §63.3890 or the applicable operating limit(s) in table 1 to this subpart (including any periods when emissions bypassed the

sfrattini on LAPJZKW1R2 with $$_JOB
VerDate Sep<11>2014 09:16 Apr 04, 2023 Jkt 256165 PO 00000 Frm 00755 Fmt 8010 Sfmt 8010 Q:\40\256165.XXX PC31

add-on control device and were diverted to the atmosphere), before January 5, 2021, the semiannual compliance report must contain the information in paragraphs (a)(7)(i) through (xiv) of this section. This includes periods of SSM during which deviations occurred. On and after January 5, 2021, the semiannual compliance report must contain the information in paragraphs (a)(7)(i) through (xii), (xiv), and (xv) of this section. If you use the emission rate with add-on controls option and there was a deviation from the applicable work practice standards in § 63.3893(b), the semiannual compliance report must contain the information in paragraph (a)(7)(xiii) of this section.

(i) The beginning and ending dates of each compliance period during which the 12-month organic HAP emission rate exceeded the applicable emission limit in § 63.3890.

(ii) The calculations used to determine the 12-month organic HAP emission rate for each compliance period in which a deviation occurred. You must provide the calculation of the total mass of organic HAP emissions for the coatings, thinners and/or other additives, and cleaning materials used each month using Equations 1 and 1A through 1C of § 63.3951; and, if applicable, the calculation used to determine mass of organic HAP in waste materials according to § 63.3951(e)(4); the calculation of the total volume of coating solids used each month using Equation 2 of § 63.3951; the calculation of the mass of organic HAP emission reduction each month by emission capture systems and add-on control devices using Equations 1 and 1A through 1D of § 63.3961, and Equations 2, 3, and 3A through 3C of § 63.3961, as applicable; the calculation of the total mass of organic HAP emissions each month using Equation 4 of § 63.3961; and the calculation of the 12-month organic HAP emission rate using Equation 5 of § 63.3961. You do not need to submit the background data supporting these calculations (*e.g.*, information provided by materials suppliers or manufacturers, or test reports).

(iii) The date and time that each malfunction of the capture system or add-on control devices started and stopped.

(iv) A brief description of the CPMS.

(v) The date of the latest CPMS certification or audit.

(vi) Before January 5, 2021, the date and time that each CPMS was inoperative, except for zero (low-level) and high-level checks. On and after January 5, 2021, the number of instances that the CPMS was inoperative, and for each instance, except for zero (low-level) and high-level checks, the date, time, and duration that the CPMS was inoperative; the cause (including unknown cause) for the CPMS being inoperative; and the actions you took to minimize emissions in accordance with § 63.3900(b).

(vii) Before January 5, 2021, the date, time, and duration that each CPMS was out-of-control, including the information in § 63.8(c)(8). On and after January 5, 2021, the number of instances that the CPMS was out of control as specified in § 63.8(c)(7) and, for each instance, the date, time, and duration that the CPMS was out-of-control; the cause (including unknown cause) for the CPMS being out-of-control; and descriptions of corrective actions taken.

(viii) Before January 5, 2021, the date and time period of each deviation from an operating limit in table 1 to this subpart; date and time period of any bypass of the add-on control device; and whether each deviation occurred during a period of SSM or during another period. On and after January 5, 2021, the number of deviations from an operating limit in table 1 to this subpart and, for each deviation, the date, time, and duration of each deviation; and the date, time, and duration of any bypass of the add-on control device.

(ix) A summary of the total duration of each deviation from an operating limit in Table 1 to this subpart and each bypass of the add-on control device during the semiannual reporting period, and the total duration as a percent of the total source operating time during that semiannual reporting period.

(x) Before January 5, 2021, a breakdown of the total duration of the deviations from the operating limits in table 1 of this subpart and bypasses of the add-on control device during the semiannual reporting period into those that were due to startup, shutdown,

sfrattini on LAPJZKW1R2 with $$_JOB
VerDate Sep<11>2014 09:16 Apr 04, 2023 Jkt 256165 PO 00000 Frm 00756 Fmt 8010 Sfmt 8010 Q:\40\256165.XXX PC31

control equipment problems, process problems, other known causes, and other unknown causes. On and after January 5, 2021, a breakdown of the total duration of the deviations from the operating limits in Table 1 to this subpart and bypasses of the add-on control device during the semiannual reporting period into those that were due to control equipment problems, process problems, other known causes, and other unknown causes.

(xi) A summary of the total duration of CPMS downtime during the semiannual reporting period and the total duration of CPMS downtime as a percent of the total source operating time during that semiannual reporting period.

(xii) A description of any changes in the CPMS, coating operation, emission capture system, or add-on control device since the last semiannual reporting period.

(xiii) Before January 5, 2021, for each deviation from the work practice standards, a description of the deviation, the date and time period of the deviation, and the actions you took to correct the deviation. On and after January 5, 2021, for deviations from the work practice standards, the number of deviations, and, for each deviation, the information in paragraphs (a)(7)(xiii)(A) and (B) of this section:

(A) A description of the deviation; the date, time, and duration of the deviation; and the actions you took to minimize emissions in accordance with § 63.3900(b).

(B) The description required in paragraph (a)(7)(xiii)(A) of this section must include a list of the affected sources or equipment for which a deviation occurred and the cause of the deviation (including unknown cause, if applicable).

(xiv) Before January 5, 2021, statement of the cause of each deviation. On and after January 5, 2021, for deviations from an emission limit in § 63.3890 or an operating limit in table 1 to this subpart, a statement of the cause of each deviation (including unknown cause, if applicable) and the actions you took to minimize emissions in accordance with § 63.3900(b).

(xv) On and after January 5, 2021, for each deviation from an emission limit in § 63.3890 or operating limit in table 1 to this subpart, a list of the affected sources or equipment for which a deviation occurred, an estimate of the quantity of each regulated pollutant emitted over any emission limit in § 63.3890 or operating limit in table 1 to this subpart, and a description of the method used to estimate the emissions.

(b) *Performance test reports.* If you use the emission rate with add-on controls option, you must submit reports of performance test results for emission capture systems and add-on control devices no later than 60 days after completing the tests as specified in § 63.10(d)(2).

(c) *SSM reports.* Before January 5, 2021, if you used the emission rate with add-on controls option and you had a SSM during the semiannual reporting period, you must submit the reports specified in paragraphs (c)(1) and (2) of this section. On and after January 5, 2021, the reports specified in paragraphs (c)(1) and (2) of this section are not required.

(1) If your actions were consistent with your startup, shutdown, and malfunction plan, you must include the information specified in § 63.10(d) in the semiannual compliance report required by paragraph (a) of this section.

(2) If your actions were not consistent with your startup, shutdown, and malfunction plan, you must submit an immediate startup, shutdown, and malfunction report as described in paragraphs (c)(2)(i) and (ii) of this section.

(i) You must describe the actions taken during the event in a report delivered by facsimile, telephone, or other means to the Administrator within 2 working days after starting actions that are inconsistent with the plan.

(ii) You must submit a letter to the Administrator within 7 working days after the end of the event, unless you have made alternative arrangements with the Administrator as specified in § 63.10(d)(5)(ii). The letter must contain the information specified in § 63.10(d)(5)(ii).

(d) *Performance test reports.* On and after January 5, 2021, you must submit the results of the performance test required in §§ 63.3940 and 63.3950 following

sfrattini on LAPJZKW1R2 with $$_JOB
VerDate Sep<11>2014 09:16 Apr 04, 2023 Jkt 256165 PO 00000 Frm 00757 Fmt 8010 Sfmt 8010 Q:\40\256165.XXX PC31

the procedure specified in paragraphs (d)(1) through (3) of this section.

(1) For data collected using test methods supported by the EPA's Electronic Reporting Tool (ERT) as listed on the EPA's ERT website (*https://www.epa.gov/electronic-reporting-air-emissions/electronic-reporting-tool-ert*) at the time of the test, you must submit the results of the performance test to the EPA via the Compliance and Emissions Data Reporting Interface (CEDRI). The CEDRI interface can be accessed through the EPA's Central Data Exchange (CDX) (*https://cdx.epa.gov//*). Performance test data must be submitted in a file format generated through the use of the EPA's ERT or an alternate electronic file format consistent with the extensible markup language (XML) schema listed on the EPA's ERT website.

(2) For data collected using test methods that are not supported by the EPA's ERT as listed on the EPA's ERT website at the time of the test, you must submit the results of the performance test to the Administrator at the appropriate address listed in § 63.13, unless the Administrator agrees to or specifies an alternate reporting method.

(3) If you claim that some of the performance test information being submitted under paragraph (d)(1) of this section is Confidential Business Information (CBI), you must submit a complete file generated through the use of the EPA's ERT or an alternate electronic file consistent with the XML schema listed on the EPA's ERT website, including information claimed to be CBI, on a compact disc, flash drive, or other commonly used electronic storage medium to the EPA. The electronic medium must be clearly marked as CBI and mailed to U.S. EPA/OAPQS/CORE CBI Office, Attention: Group Leader, Measurement Policy Group, MD C404–02, 4930 Old Page Rd., Durham, NC 27703. The same ERT or alternate file with the CBI omitted must be submitted to the EPA via the EPA's CDX as described in paragraph (d)(1) of this section.

(e) *Initial notification reports.* On and after January 5, 2021, the owner or operator shall submit the initial notifications required in § 63.9(b) and the notification of compliance status required in §§ 63.9(h) and 63.3910(c) to the EPA via the CEDRI. The CEDRI interface can be accessed through the EPA's CDX (*https://cdx.epa.gov/*). The owner or operator must upload to CEDRI an electronic copy of each applicable notification in portable document format (PDF). The applicable notification must be submitted by the deadline specified in this subpart, regardless of the method in which the reports are submitted. Owners or operators who claim that some of the information required to be submitted via CEDRI is CBI shall submit a complete report generated using the appropriate form in CEDRI or an alternate electronic file consistent with the XML schema listed on the EPA's CEDRI website, including information claimed to be CBI, on a compact disc, flash drive, or other commonly used electronic storage medium to the EPA. The electronic medium shall be clearly marked as CBI and mailed to U.S. EPA/OAQPS/CORE CBI Office, Attention: Group Leader, Measurement Policy Group, MD C404–02, 4930 Old Page Rd., Durham, NC 27703. The same file with the CBI omitted shall be submitted to the EPA via the EPA's CDX as described earlier in this paragraph.

(f) *Semiannual compliance reports.* On and after January 5, 2021, or once the reporting template has been available on the CEDRI website for 1 year, whichever date is later, the owner or operator shall submit the semiannual compliance report required in paragraph (a) of this section to the EPA via the CEDRI. The CEDRI interface can be accessed through the EPA's CDX (*https://cdx.epa.gov/*). The owner or operator must use the appropriate electronic template on the CEDRI website for this subpart or an alternate electronic file format consistent with the XML schema listed on the CEDRI website (*https://www.epa.gov/electronic-reporting-air-emissions/compliance-and-emissions-data-reporting-interface-cedri*). The date report templates become available will be listed on the CEDRI website. If the reporting form for the semiannual compliance report specific to this subpart is not available in CEDRI at the time that the report is due, you must submit the report to the

sfrattini on LAPJZKW1R2 with $$_JOB
VerDate Sep<11>2014 09:16 Apr 04, 2023 Jkt 256165 PO 00000 Frm 00758 Fmt 8010 Sfmt 8010 Q:\40\256165.XXX PC31

Administrator at the appropriate addresses listed in §63.13. Once the form has been available in CEDRI for 1 year, you must begin submitting all subsequent reports via CEDRI. The reports must be submitted by the deadlines specified in this subpart, regardless of the method in which the reports are submitted. Owners or operators who claim that some of the information required to be submitted via CEDRI is CBI shall submit a complete report generated using the appropriate form in CEDRI or an alternate electronic file consistent with the XML schema listed on the EPA's CEDRI website, including information claimed to be CBI, on a compact disc, flash drive, or other commonly used electronic storage medium to the EPA. The electronic medium shall be clearly marked as CBI and mailed to U.S. EPA/OAQPS/CORE CBI Office, Attention: Group Leader, Measurement Policy Group, MD C404–02, 4930 Old Page Rd., Durham, NC 27703. The same file with the CBI omitted shall be submitted to the EPA via the EPA's CDX as described earlier in this paragraph.

(g) *Reporting during EPA system outages.* If you are required to electronically submit a report through the CEDRI in the EPA's CDX, and due to a planned or actual outage of either the EPA's CEDRI or CDX systems within the period of time beginning 5 business days prior to the date that the submission is due, you will be or are precluded from accessing CEDRI or CDX and submitting a required report within the time prescribed, you may assert a claim of the EPA system outage for failure to timely comply with the reporting requirement. You must submit notification to the Administrator in writing as soon as possible following the date you first knew, or through due diligence should have known, that the event may cause or caused a delay in reporting. You must provide to the Administrator a written description identifying the date, time, and length of the outage; a rationale for attributing the delay in reporting beyond the regulatory deadline to the EPA system outage; describe the measures taken or to be taken to minimize the delay in reporting; and identify a date by which you propose to report, or if you have already met the reporting requirement at the time of the notification, the date you reported. In any circumstance, the report must be submitted electronically as soon as possible after the outage is resolved. The decision to accept the claim of the EPA system outage and allow an extension to the reporting deadline is solely within the discretion of the Administrator.

(h) *Reporting during force majeure events.* If you are required to electronically submit a report through CEDRI in the EPA's CDX and a force majeure event is about to occur, occurs, or has occurred or there are lingering effects from such an event within the period of time beginning 5 business days prior to the date the submission is due, the owner or operator may assert a claim of force majeure for failure to timely comply with the reporting requirement. For the purposes of this section, a force majeure event is defined as an event that will be or has been caused by circumstances beyond the control of the affected facility, its contractors, or any entity controlled by the affected facility that prevents you from complying with the requirement to submit a report electronically within the time period prescribed. Examples of such events are acts of nature (*e.g.*, hurricanes, earthquakes, or floods), acts of war or terrorism, or equipment failure or safety hazard beyond the control of the affected facility (*e.g.*, large scale power outage). If you intend to assert a claim of force majeure, you must submit notification to the Administrator in writing as soon as possible following the date you first knew, or through due diligence should have known, that the event may cause or caused a delay in reporting. You must provide to the Administrator a written description of the force majeure event and a rationale for attributing the delay in reporting beyond the regulatory deadline to the force majeure event; describe the measures taken or to be taken to minimize the delay in reporting; and identify a date by which you propose to report, or if you have already met the reporting requirement at the time of the notification, the date you reported. In any circumstance, the reporting must occur as soon as possible after the force

sfrattini on LAPJZKW1R2 with $$_JOB
VerDate Sep<11>2014 09:16 Apr 04, 2023 Jkt 256165 PO 00000 Frm 00759 Fmt 8010 Sfmt 8010 Q:\40\256165.XXX PC31

majeure event occurs. The decision to accept the claim of force majeure and allow an extension to the reporting deadline is solely within the discretion of the Administrator.

[69 FR 157, Jan. 2, 2004, as amended at 85 FR 41138, July 8, 2020]

§ 63.3930 What records must I keep?

You must collect and keep records of the data and information specified in this section. Failure to collect and keep these records is a deviation from the applicable standard.

(a) A copy of each notification and report that you submitted to comply with this subpart, and the documentation supporting each notification and report. If you are using the predominant activity alternative under § 63.3890(c), you must keep records of the data and calculations used to determine the predominant activity. If you are using the facility-specific emission limit alternative under § 63.3890(c), you must keep records of the data used to calculate the facility-specific emission limit for the initial compliance demonstration. You must also keep records of any data used in each annual predominant activity determination and in the calculation of the facility-specific emission limit for each 12-month compliance period included in the semi-annual compliance reports.

(b) A current copy of information provided by materials suppliers or manufacturers, such as manufacturer's formulation data, or test data used to determine the mass fraction of organic HAP and density for each coating, thinner and/or other additive, and cleaning material, and the volume fraction of coating solids for each coating. If you conducted testing to determine mass fraction of organic HAP, density, or volume fraction of coating solids, you must keep a copy of the complete test report. If you use information provided to you by the manufacturer or supplier of the material that was based on testing, you must keep the summary sheet of results provided to you by the manufacturer or supplier. You are not required to obtain the test report or other supporting documentation from the manufacturer or supplier.

(c) For each compliance period, the records specified in paragraphs (c)(1) through (4) of this section.

(1) A record of the coating operations on which you used each compliance option and the time periods (beginning and ending dates and times) for each option you used.

(2) For the compliant material option, a record of the calculation of the organic HAP content for each coating, using Equation 2 of § 63.3941.

(3) For the emission rate without add-on controls option, a record of the calculation of the total mass of organic HAP emissions for the coatings, thinners and/or other additives, and cleaning materials used each month using Equations 1, 1A through 1C, and 2 of § 63.3951; and, if applicable, the calculation used to determine mass of organic HAP in waste materials according to § 63.3951(e)(4); the calculation of the total volume of coating solids used each month using Equation 2 of § 63.3951; and the calculation of each 12-month organic HAP emission rate using Equation 3 of § 63.3951.

(4) For the emission rate with add-on controls option, records of the calculations specified in paragraphs (c)(4)(i) through (v) of this section.

(i) The calculation of the total mass of organic HAP emissions for the coatings, thinners and/or other additives, and cleaning materials used each month using Equations 1 and 1A through 1C of § 63.3951 and, if applicable, the calculation used to determine mass of organic HAP in waste materials according to § 63.3951(e)(4);

(ii) The calculation of the total volume of coating solids used each month using Equation 2 of § 63.3951;

(iii) The calculation of the mass of organic HAP emission reduction by emission capture systems and add-on control devices using Equations 1 and 1A through 1D of § 63.3961 and Equations 2, 3, and 3A through 3C of § 63.3961, as applicable;

(iv) The calculation of each month's organic HAP emission rate using Equation 4 of § 63.3961; and

(v) The calculation of each 12-month organic HAP emission rate using Equation 5 of § 63.3961.

(d) A record of the name and volume of each coating, thinner and/or other

sfrattini on LAPJZKW1R2 with $$_JOB
VerDate Sep<11>2014 09:16 Apr 04, 2023 Jkt 256165 PO 00000 Frm 00760 Fmt 8010 Sfmt 8010 Q:\40\256165.XXX PC31

additive, and cleaning material used during each compliance period. If you are using the compliant material option for all coatings at the source, you may maintain purchase records for each material used rather than a record of the volume used.

(e) A record of the mass fraction of organic HAP for each coating, thinner and/or other additive, and cleaning material used during each compliance period unless the material is tracked by weight.

(f) A record of the volume fraction of coating solids for each coating used during each compliance period.

(g) If you use either the emission rate without add-on controls or the emission rate with add-on controls compliance option, the density for each coating, thinner and/or other additive, and cleaning material used during each compliance period.

(h) If you use an allowance in Equation 1 of §63.3951 for organic HAP contained in waste materials sent to or designated for shipment to a treatment, storage, and disposal facility (TSDF) according to §63.3951(e)(4), you must keep records of the information specified in paragraphs (h)(1) through (3) of this section.

(1) The name and address of each TSDF to which you sent waste materials for which you use an allowance in Equation 1 of §63.3951; a statement of which subparts under 40 CFR parts 262, 264, 265, and 266 apply to the facility; and the date of each shipment.

(2) Identification of the coating operations producing waste materials included in each shipment and the month or months in which you used the allowance for these materials in Equation 1 of §63.3951.

(3) The methodology used in accordance with §63.3951(e)(4) to determine the total amount of waste materials sent to or the amount collected, stored, and designated for transport to a TSDF each month; and the methodology to determine the mass of organic HAP contained in these waste materials. This must include the sources for all data used in the determination, methods used to generate the data, frequency of testing or monitoring, and supporting calculations and documentation, including the waste manifest for each shipment.

(i) [Reserved]

(j) Before January 5, 2021, you must keep records of the date, time, and duration of each deviation. On and after January 5, 2021, for each deviation from an emission limitation reported under §63.3920(a)(5) through (7), a record of the information specified in paragraphs (j)(1) through (4) of this section, as applicable.

(1) The date, time, and duration of the deviation, as reported under §63.3920(a)(5) through (7).

(2) A list of the affected sources or equipment for which the deviation occurred and the cause of the deviation, as reported under §63.3920(a)(5) through (7).

(3) An estimate of the quantity of each regulated pollutant emitted over any applicable emission limit in §63.3890 or any applicable operating limit in table 1 to this subpart, and a description of the method used to calculate the estimate, as reported under §63.3920(a)(5) through (7).

(4) A record of actions taken to minimize emissions in accordance with §63.3900(b) and any corrective actions taken to return the affected unit to its normal or usual manner of operation.

(k) If you use the emission rate with add-on controls option, you must also keep the records specified in paragraphs (k)(1) through (8) of this section.

(1) Before January 5, 2021, for each deviation, a record of whether the deviation occurred during a period of SSM. On and after January 5, 2021, a record of whether the deviation occurred during a period of SSM is not required.

(2) Before January 5, 2021, the records in §63.6(e)(3)(iii) through (v) related to SSM. On and after January 5, 2021, the records in §63.6(e)(3)(iii) through (v) related to SSM are not required.

(3) The records required to show continuous compliance with each operating limit specified in Table 1 to this subpart that applies to you.

(4) For each capture system that is a PTE, the data and documentation you used to support a determination that the capture system meets the criteria in Method 204 of appendix M to 40 CFR

sfrattini on LAPJZKW1R2 with $$_JOB
VerDate Sep<11>2014 09:16 Apr 04, 2023 Jkt 256165 PO 00000 Frm 00761 Fmt 8010 Sfmt 8010 Q:\40\256165.XXX PC31

part 51 for a PTE and has a capture efficiency of 100 percent, as specified in § 63.3965(a).

(5) For each capture system that is not a PTE, the data and documentation you used to determine capture efficiency according to the requirements specified in §§ 63.3964 and 63.3965(b) through (e), including the records specified in paragraphs (k)(5)(i) through (iii) of this section that apply to you.

(i) *Records for a liquid-to-uncaptured gas protocol using a temporary total enclosure or building enclosure.* Records of the mass of total volatile hydrocarbon (TVH) as measured by Method 204A or 204F of appendix M to 40 CFR part 51 for each material used in the coating operation, and the total TVH for all materials used during each capture efficiency test run, including a copy of the test report. Records of the mass of TVH emissions not captured by the capture system that exited the temporary total enclosure or building enclosure during each capture efficiency test run, as measured by Method 204D or 204E of appendix M to 40 CFR part 51, including a copy of the test report. Records documenting that the enclosure used for the capture efficiency test met the criteria in Method 204 of appendix M to 40 CFR part 51 for either a temporary total enclosure or a building enclosure.

(ii) *Records for a gas-to-gas protocol using a temporary total enclosure or a building enclosure.* Records of the mass of TVH emissions captured by the emission capture system as measured by Method 204B or 204C of appendix M to 40 CFR part 51 at the inlet to the add-on control device, including a copy of the test report. Records of the mass of TVH emissions not captured by the capture system that exited the temporary total enclosure or building enclosure during each capture efficiency test run as measured by Method 204D or 204E of appendix M to 40 CFR part 51, including a copy of the test report. Records documenting that the enclosure used for the capture efficiency test met the criteria in Method 204 of appendix M to 40 CFR part 51 for either a temporary total enclosure or a building enclosure.

(iii) *Records for an alternative protocol.* Records needed to document a capture efficiency determination using an alternative method or protocol as specified in § 63.3965(e), if applicable.

(6) The records specified in paragraphs (k)(6)(i) and (ii) of this section for each add-on control device organic HAP destruction or removal efficiency determination as specified in § 63.3966.

(i) Records of each add-on control device performance test conducted according to §§ 63.3964 and 63.3966.

(ii) Records of the coating operation conditions during the add-on control device performance test showing that the performance test was conducted under representative operating conditions.

(7) Records of the data and calculations you used to establish the emission capture and add-on control device operating limits as specified in § 63.3967 and to document compliance with the operating limits as specified in Table 1 to this subpart.

(8) A record of the work practice plan required by § 63.3893 and documentation that you are implementing the plan on a continuous basis.

[69 FR 157, Jan. 2, 2004, as amended at 85 FR 41141, July 8, 2020]

§ 63.3931 In what form and for how long must I keep my records?

(a) Your records must be in a form suitable and readily available for expeditious review, according to § 63.10(b)(1). Where appropriate, the records may be maintained as electronic spreadsheets or as a database. On and after January 5, 2021, any records required to be maintained by this subpart that are in reports that were submitted electronically via the EPA's CEDRI may be maintained in electronic format. This ability to maintain electronic copies does not affect the requirement for facilities to make records, data, and reports available upon request to a delegated air agency or the EPA as part of an on-site compliance evaluation.

(b) As specified in § 63.10(b)(1), you must keep each record for 5 years following the date of each occurrence, measurement, maintenance, corrective action, report, or record.

(c) You must keep each record on-site for at least 2 years after the date of

sfrattini on LAPJZKW1R2 with $$_JOB
VerDate Sep<11>2014 09:16 Apr 04, 2023 Jkt 256165 PO 00000 Frm 00762 Fmt 8010 Sfmt 8010 Q:\40\256165.XXX PC31

each occurrence, measurement, maintenance, corrective action, report, or record according to §63.10(b)(1). You may keep the records off-site for the remaining 3 years.

[69 FR 157, Jan. 2, 2004, as amended at 85 FR 41141, July 8, 2020]

COMPLIANCE REQUIREMENTS FOR THE COMPLIANT MATERIAL OPTION

§63.3940 By what date must I conduct the initial compliance demonstration?

You must complete the initial compliance demonstration for the initial compliance period according to the requirements in §63.3941. The initial compliance period begins on the applicable compliance date specified in §63.3883 and ends on the last day of the 12th month following the compliance date. If the compliance date occurs on any day other than the first day of a month, then the initial compliance period extends through that month plus the next 12 months. The initial compliance demonstration includes the calculations according to §63.3941 and supporting documentation showing that during the initial compliance period, you used no coating with an organic HAP content that exceeded the applicable emission limit in §63.3890, and that you used no thinners and/or other additives, or cleaning materials that contained organic HAP as determined according to §63.3941(a).

§63.3941 How do I demonstrate initial compliance with the emission limitations?

You may use the compliant material option for any individual coating operation, for any group of coating operations in the affected source, or for all the coating operations in the affected source. You must use either the emission rate without add-on controls option or the emission rate with add-on controls option for any coating operation in the affected source for which you do not use this option. To demonstrate initial compliance using the compliant material option, the coating operation or group of coating operations must use no coating with an organic HAP content that exceeds the applicable emission limits in §63.3890 and must use no thinner and/or other additive, or cleaning material that contains organic HAP as determined according to this section. Any coating operation for which you use the compliant material option is not required to meet the operating limits or work practice standards required in §§63.3892 and 63.3893, respectively. You must conduct a separate initial compliance demonstration for each general use, high performance, magnet wire, rubber-to-metal, and extreme performance fluoropolymer coating operation unless you are demonstrating compliance with a predominant activity or facility-specific emission limit as provided in §63.3890(c). If you are demonstrating compliance with a predominant activity or facility-specific emission limit as provided in §63.3890(c), you must demonstrate that all coating operations included in the predominant activity determination or calculation of the facility-specific emission limit comply with that limit. You must meet all the requirements of this section. Use the procedures in this section on each coating, thinner and/or other additive, and cleaning material in the condition it is in when it is received from its manufacturer or supplier and prior to any alteration. You do not need to redetermine the organic HAP content of coatings, thinners and/or other additives, and cleaning materials that are reclaimed on-site (or reclaimed off-site if you have documentation showing that you received back the exact same materials that were sent off-site) and reused in the coating operation for which you use the compliant material option, provided these materials in their condition as received were demonstrated to comply with the compliant material option.

(a) *Determine the mass fraction of organic HAP for each material used.* You must determine the mass fraction of organic HAP for each coating, thinner and/or other additive, and cleaning material used during the compliance period by using one of the options in paragraphs (a)(1) through (5) of this section.

(1) *Method 311 (appendix A to 40 CFR part 63).* You may use Method 311 for

sfrattini on LAPJZKW1R2 with $$_JOB
VerDate Sep<11>2014 09:16 Apr 04, 2023 Jkt 256165 PO 00000 Frm 00763 Fmt 8010 Sfmt 8010 Q:\40\256165.XXX PC31

determining the mass fraction of organic HAP. Use the procedures specified in paragraphs (a)(1)(i) and (ii) of this section when performing a Method 311 test.

(i) Count each organic HAP in table 5 to this subpart that is measured to be present at 0.1 percent by mass or more and at 1.0 percent by mass or more for other compounds. For example, if toluene (not listed in table 5 to this subpart) is measured to be 0.5 percent of the material by mass, you do not have to count it. Express the mass fraction of each organic HAP you count as a value truncated to four places after the decimal point (*e.g.*, 0.3791).

(ii) Calculate the total mass fraction of organic HAP in the test material by adding up the individual organic HAP mass fractions and truncating the result to three places after the decimal point (*e.g.*, 0.763).

(2) *Method 24 (appendix A to 40 CFR part 60).* For coatings, you may use Method 24 to determine the mass fraction of nonaqueous volatile matter and use that value as a substitute for mass fraction of organic HAP. For reactive adhesives in which some of the HAP react to form solids and are not emitted to the atmosphere, you may use the alternative method contained in appendix A to subpart PPPP of this part, rather than Method 24. You may use the volatile fraction that is emitted, as measured by the alternative method in appendix A to subpart PPPP of this part, as a substitute for the mass fraction of organic HAP.

(3) *Alternative method.* You may use an alternative test method for determining the mass fraction of organic HAP once the Administrator has approved it. You must follow the procedure in § 63.7(f) to submit an alternative test method for approval.

(4) *Information from the supplier or manufacturer of the material.* You may rely on information other than that generated by the test methods specified in paragraphs (a)(1) through (3) of this section, such as manufacturer's formulation data, if it represents each organic HAP in table 5 to this subpart that is present at 0.1 percent by mass or more and at 1.0 percent by mass or more for other compounds. For example, if toluene (not listed in table 5 to this subpart) is 0.5 percent of the material by mass, you do not have to count it. For reactive adhesives in which some of the HAP react to form solids and are not emitted to the atmosphere, you may rely on manufacturer's data that expressly states the organic HAP or volatile matter mass fraction emitted. If there is a disagreement between such information and results of a test conducted according to paragraphs (a)(1) through (3) of this section, then the test method results will take precedence unless, after consultation, you demonstrate to the satisfaction of the enforcement agency that the formulation data are correct.

(5) *Solvent blends.* Solvent blends may be listed as single components for some materials in data provided by manufacturers or suppliers. Solvent blends may contain organic HAP which must be counted toward the total organic HAP mass fraction of the materials. When test data and manufacturer's data for solvent blends are not available, you may use the default values for the mass fraction of organic HAP in these solvent blends listed in Table 3 or 4 to this subpart. If you use the tables, you must use the values in Table 3 for all solvent blends that match Table 3 entries according to the instructions for Table 3, and you may use Table 4 only if the solvent blends in the materials you use do not match any of the solvent blends in Table 3 and you know only whether the blend is aliphatic or aromatic. However, if the results of a Method 311 (appendix A to 40 CFR part 63) test indicate higher values than those listed on Table 3 or 4 to this subpart, the Method 311 results will take precedence unless, after consultation, you demonstrate to the satisfaction of the enforcement agency that the formulation data are correct.

(b) *Determine the volume fraction of coating solids for each coating.* You must determine the volume fraction of coating solids (liters (gal) of coating solids per liter (gal) of coating) for each coating used during the compliance period by a test, by information provided by the supplier or the manufacturer of the material, or by calculation, as specified in paragraphs (b)(1) through (4) of

sfrattini on LAPJZKW1R2 with $$_JOB
VerDate Sep<11>2014 09:16 Apr 04, 2023 Jkt 256165 PO 00000 Frm 00764 Fmt 8010 Sfmt 8010 Q:\40\256165.XXX PC31

this section. If test results obtained according to paragraph (b)(1) of this section do not agree with the information obtained under paragraph (b)(3) or (4) of this section, the test results will take precedence unless, after consultation, you demonstrate to the satisfaction of the enforcement agency that the formulation data are correct.

(1) *ASTM Method D2697–03 (Reapproved 2014) or D6093–97 (Reapproved 2016)*. You may use ASTM D2697–03 (Reapproved 2014) (incorporated by reference, *see* §63.14), or D6093–97 (Reapproved 2016) (incorporated by reference, *see* §63.14), to determine the volume fraction of coating solids for each coating. Divide the nonvolatile volume percent obtained with the methods by 100 to calculate volume fraction of coating solids.

(2) *Alternative method*. You may use an alternative test method for determining the solids content of each coating once the Administrator has approved it. You must follow the procedure in §63.7(f) to submit an alternative test method for approval.

(3) *Information from the supplier or manufacturer of the material*. You may obtain the volume fraction of coating solids for each coating from the supplier or manufacturer.

(4) *Calculation of volume fraction of coating solids*. You may determine the volume fraction of coating solids using Equation 1 of this section:

$$V_s = 1 - \frac{m_{volatiles}}{D_{avg}} \qquad \text{(Eq. 1)}$$

Where:

V_s = Volume fraction of coating solids, liters (gal) coating solids per liter (gal) coating.

$m_{volatiles}$ = Total volatile matter content of the coating, including HAP, volatile organic compounds (VOC), water, and exempt compounds, determined according to Method 24 in appendix A of 40 CFR part 60, grams volatile matter per liter coating.

D_{avg} = Average density of volatile matter in the coating, grams volatile matter per liter volatile matter, determined from test results using ASTM D1475–13 (incorporated by reference, *see* §63.14), information from the supplier or manufacturer of the material, or reference sources providing density or specific gravity data for pure materials. If there is disagreement between ASTM D1475–13 test results and other information sources, the test results will take precedence unless, after consultation you demonstrate to the satisfaction of the enforcement agency that the formulation data are correct.

(c) *Determine the density of each coating*. Determine the density of each coating used during the compliance period from test results using ASTM D1475–13 (incorporated by reference, *see* §63.14), information from the supplier or manufacturer of the material, or specific gravity data for pure chemicals. If there is disagreement between ASTM D1475–13 test results and the supplier's or manufacturer's information, the test results will take precedence unless, after consultation you demonstrate to the satisfaction of the enforcement agency that the formulation data are correct.

(d) *Determine the organic HAP content of each coating*. Calculate the organic HAP content, kg (lb) of organic HAP emitted per liter (gal) coating solids used, of each coating used during the compliance period using Equation 2 of this section:

$$H_c = \frac{(D_c)(W_c)}{V_s} \qquad \text{(Eq. 2)}$$

Where:

H_c = Organic HAP content of the coating, kg organic HAP emitted per liter (gal) coating solids used.

D_c = Density of coating, kg coating per liter (gal) coating, determined according to paragraph (c) of this section.

W_c = Mass fraction of organic HAP in the coating, kg organic HAP per kg coating, determined according to paragraph (a) of this section.

V_s = Volume fraction of coating solids, liter (gal) coating solids per liter (gal) coating, determined according to paragraph (b) of this section.

(e) *Compliance demonstration*. The calculated organic HAP content for each coating used during the initial compliance period must be less than or equal to the applicable emission limit in §63.3890; and each thinner and/or other additive, and cleaning material used during the initial compliance period must contain no organic HAP, determined according to paragraph (a) of this section. You must keep all records required by §§63.3930 and 63.3931. As

sfrattini on LAPJZKW1R2 with $$_JOB
VerDate Sep<11>2014 09:16 Apr 04, 2023 Jkt 256165 PO 00000 Frm 00765 Fmt 8010 Sfmt 8010 Q:\40\256165.XXX PC31
ER02JA04.003</MATH> ER02JA04.004</MATH>

part of the notification of compliance status required in § 63.3910, you must identify the coating operation(s) for which you used the compliant material option and submit a statement that the coating operation(s) was (were) in compliance with the emission limitations during the initial compliance period because you used no coatings for which the organic HAP content exceeded the applicable emission limit in § 63.3890, and you used no thinners and/or other additives, or cleaning materials that contained organic HAP, determined according to the procedures in paragraph (a) of this section.

[69 FR 157, Jan. 2, 2004, as amended at 85 FR 41141, July 8, 2020]

§ 63.3942 How do I demonstrate continuous compliance with the emission limitations?

(a) For each compliance period to demonstrate continuous compliance, you must use no coating for which the organic HAP content (determined using Equation 2 of § 63.3941) exceeds the applicable emission limit in § 63.3890, and use no thinner and/or other additive, or cleaning material that contains organic HAP, determined according to § 63.3941(a). A compliance period consists of 12 months. Each month, after the end of the initial compliance period described in § 63.3940, is the end of a compliance period consisting of that month and the preceding 11 months. If you are complying with a facility-specific emission limit under § 63.3890(c), you must also perform the calculation using Equation 1 in § 63.3890(c)(2) on a monthly basis using the data from the previous 12 months of operation.

(b) If you choose to comply with the emission limitations by using the compliant material option, the use of any coating, thinner and/or other additive, or cleaning material that does not meet the criteria specified in paragraph (a) of this section is a deviation from the emission limitations that must be reported as specified in §§ 63.3910(c)(6) and 63.3920(a)(5).

(c) As part of each semiannual compliance report required by § 63.3920, you must identify the coating operation(s) for which you used the compliant material option. If there were no deviations from the applicable emission limit in § 63.3890, submit a statement that the coating operation(s) was (were) in compliance with the emission limitations during the reporting period because you used no coatings for which the organic HAP content exceeded the applicable emission limit in § 63.3890, and you used no thinner and/or other additive, or cleaning material that contained organic HAP, determined according to § 63.3941(a).

(d) You must maintain records as specified in §§ 63.3930 and 63.3931.

COMPLIANCE REQUIREMENTS FOR THE EMISSION RATE WITHOUT ADD-ON CONTROLS OPTION

§ 63.3950 By what date must I conduct the initial compliance demonstration?

You must complete the initial compliance demonstration for the initial compliance period according to the requirements of § 63.3951. The initial compliance period begins on the applicable compliance date specified in § 63.3883 and ends on the last day of the 12th month following the compliance date. If the compliance date occurs on any day other than the first day of a month, then the initial compliance period extends through the end of that month plus the next 12 months. You must determine the mass of organic HAP emissions and volume of coating solids used each month and then calculate an organic HAP emission rate at the end of the initial compliance period. The initial compliance demonstration includes the calculations according to § 63.3951 and supporting documentation showing that during the initial compliance period the organic HAP emission rate was equal to or less than the applicable emission limit in § 63.3890.

§ 63.3951 How do I demonstrate initial compliance with the emission limitations?

You may use the emission rate without add-on controls option for any individual coating operation, for any group of coating operations in the affected source, or for all the coating operations in the affected source. You must use either the compliant material option or the emission rate with add-on

sfrattini on LAPJZKW1R2 with $$_JOB
VerDate Sep<11>2014 09:16 Apr 04, 2023 Jkt 256165 PO 00000 Frm 00766 Fmt 8010 Sfmt 8010 Q:\40\256165.XXX PC31

controls option for any coating operation in the affected source for which you do not use this option. To demonstrate initial compliance using the emission rate without add-on controls option, the coating operation or group of coating operations must meet the applicable emission limit in §63.3890, but is not required to meet the operating limits or work practice standards in §§63.3892 and 63.3893, respectively. You must conduct a separate initial compliance demonstration for each general use, magnet wire, rubber-to-metal, and extreme performance fluoropolymer coating operation unless you are demonstrating compliance with a predominant activity or facility-specific emission limit as provided in §63.3890(c). If you are demonstrating compliance with a predominant activity or facility-specific emission limit as provided in §63.3890(c), you must demonstrate that all coating operations included in the predominant activity determination or calculation of the facility-specific emission limit comply with that limit. You must meet all the requirements of this section. When calculating the organic HAP emission rate according to this section, do not include any coatings, thinners and/or other additives, or cleaning materials used on coating operations for which you use the compliant material option or the emission rate with add-on controls option. You do not need to redetermine the mass of organic HAP in coatings, thinners and/or other additives, or cleaning materials that have been reclaimed on-site (or reclaimed off-site if you have documentation showing that you received back the exact same materials that were sent off-site) and reused in the coating operation for which you use the emission rate without add-on controls option. If you use coatings, thinners and/or other additives, or cleaning materials that have been reclaimed on-site, the amount of each used in a month may be reduced by the amount of each that is reclaimed. That is, the amount used may be calculated as the amount consumed to account for materials that are reclaimed.

(a) *Determine the mass fraction of organic HAP for each material.* Determine the mass fraction of organic HAP for each coating, thinner and/or other additive, and cleaning material used during each month according to the requirements in §63.3941(a).

(b) *Determine the volume fraction of coating solids.* Determine the volume fraction of coating solids (liter (gal) of coating solids per liter (gal) of coating) for each coating used during each month according to the requirements in §63.3941(b).

(c) *Determine the density of each material.* Determine the density of each liquid coating, thinner and/or other additive, and cleaning material used during each month from test results using ASTM D1475–13 or ASTM D2111–10 (Reapproved 2015) (both incorporated by reference, *see* §63.14), information from the supplier or manufacturer of the material, or reference sources providing density or specific gravity data for pure materials. If you are including powder coatings in the compliance determination, determine the density of powder coatings, using ASTM D5965–02 (Reapproved 2013) (incorporated by reference, *see* §63.14), or information from the supplier. If there is disagreement between ASTM D1475–13 or ASTM D2111–10 (Reapproved 2015) test results and other such information sources, the test results will take precedence unless, after consultation you demonstrate to the satisfaction of the enforcement agency that the formulation data are correct. If you purchase materials or monitor consumption by weight instead of volume, you do not need to determine material density. Instead, you may use the material weight in place of the combined terms for density and volume in Equations 1A, 1B, 1C, and 2 of this section.

(d) *Determine the volume of each material used.* Determine the volume (liters) of each coating, thinner and/or other additive, and cleaning material used during each month by measurement or usage records. If you purchase materials or monitor consumption by weight instead of volume, you do not need to determine the volume of each material used. Instead, you may use the material weight in place of the combined terms for density and volume in Equations 1A, 1B, and 1C of this section.

sfrattini on LAPJZKW1R2 with $$_JOB
VerDate Sep<11>2014 09:16 Apr 04, 2023 Jkt 256165 PO 00000 Frm 00767 Fmt 8010 Sfmt 8010 Q:\40\256165.XXX PC31

(e) *Calculate the mass of organic HAP emissions.* The mass of organic HAP emissions is the combined mass of organic HAP contained in all coatings, thinners and/or other additives, and cleaning materials used during each month minus the organic HAP in certain waste materials. Calculate the mass of organic HAP emissions using Equation 1 of this section.

$$H_e = A + B + C - R_w \qquad \text{(Eq. 1)}$$

Where:

H_e = Total mass of organic HAP emissions during the month, kg.

A = Total mass of organic HAP in the coatings used during the month, kg, as calculated in Equation 1A of this section.

B = Total mass of organic HAP in the thinners and/or other additives used during the month, kg, as calculated in Equation 1B of this section.

C = Total mass of organic HAP in the cleaning materials used during the month, kg, as calculated in Equation 1C of this section.

R_w = Total mass of organic HAP in waste materials sent or designated for shipment to a hazardous waste TSDF for treatment or disposal during the month, kg, determined according to paragraph (e)(4) of this section. (You may assign a value of zero to R_w if you do not wish to use this allowance.)

(1) Calculate the kg organic HAP in the coatings used during the month using Equation 1A of this section:

$$A = \sum_{i=1}^{m} \left(Vol_{c,i}\right)\left(D_{c,i}\right)\left(W_{c,i}\right) \qquad \text{(Eq. 1A)}$$

Where:

A = Total mass of organic HAP in the coatings used during the month, kg.

$Vol_{c,i}$ = Total volume of coating, i, used during the month, liters.

$D_{c,i}$ = Density of coating, i, kg coating per liter coating.

$W_{c,i}$ = Mass fraction of organic HAP in coating, i, kg organic HAP per kg coating. For reactive adhesives as defined in § 63.3981, use the mass fraction of organic HAP that is emitted as determined using the method in appendix A to subpart PPPP of this part.

m = Number of different coatings used during the month.

(2) Calculate the kg of organic HAP in the thinners and/or other additives used during the month using Equation 1B of this section:

$$B = \sum_{j=1}^{n} \left(Vol_{t,j}\right)\left(D_{t,j}\right)\left(W_{t,j}\right) \qquad \text{(Eq. 1B)}$$

Where:

B = Total mass of organic HAP in the thinners and/or other additives used during the month, kg.

$Vol_{t,j}$ = Total volume of thinner and/or other additive, j, used during the month, liters.

$D_{t,j}$ = Density of thinner and/or other additive, j, kg per liter.

$W_{t,j}$ = Mass fraction of organic HAP in thinner and/or other additive, j, kg organic HAP per kg thinner and/or other additive. For reactive adhesives as defined in § 63.3981, use the mass fraction of organic HAP that is emitted as determined using the method in appendix A to subpart PPPP of this part.

n = Number of different thinners and/or other additives used during the month.

(3) Calculate the kg organic HAP in the cleaning materials used during the month using Equation 1C of this section:

$$C = \sum_{k=1}^{p} \left(Vol_{s,k}\right)\left(D_{s,k}\right)\left(W_{s,k}\right) \qquad \text{(Eq. 1C)}$$

Where:

C = Total mass of organic HAP in the cleaning materials used during the month, kg.

$Vol_{s,k}$ = Total volume of cleaning material, k, used during the month, liters.

$D_{s,k}$ = Density of cleaning material, k, kg per liter.

$W_{s,k}$ = Mass fraction of organic HAP in cleaning material, k, kg organic HAP per kg material.

p = Number of different cleaning materials used during the month.

(4) If you choose to account for the mass of organic HAP contained in waste materials sent or designated for shipment to a hazardous waste TSDF in Equation 1 of this section, then you must determine the mass according to paragraphs (e)(4)(i) through (iv) of this section.

(i) You may only include waste materials in the determination that are generated by coating operations in the affected source for which you use Equation 1 of this section and that will be treated or disposed of by a facility that is regulated as a TSDF under 40 CFR part 262, 264, 265, or 266. The TSDF may be either off-site or on-site. You may not include organic HAP contained in wastewater.

sfrattini on LAPJZKW1R2 with $$_JOB
VerDate Sep<11>2014 09:16 Apr 04, 2023 Jkt 256165 PO 00000 Frm 00768 Fmt 8010 Sfmt 8010 Q:\40\256165.XXX PC31
ER02JA04.005</MATH> ER02JA04.006</MATH> ER02JA04.007</MATH> ER02JA04.008</MATH>

(ii) You must determine either the amount of the waste materials sent to a TSDF during the month or the amount collected and stored during the month and designated for future transport to a TSDF. Do not include in your determination any waste materials sent to a TSDF during a month if you have already included them in the amount collected and stored during that month or a previous month.

(iii) Determine the total mass of organic HAP contained in the waste materials specified in paragraph (e)(4)(ii) of this section.

(iv) You must document the methodology you use to determine the amount of waste materials and the total mass of organic HAP they contain, as required in § 63.3930(h). If waste manifests include this information, they may be used as part of the documentation of the amount of waste materials and mass of organic HAP contained in them.

(f) *Calculate the total volume of coating solids used.* Determine the total volume of coating solids used, liters, which is the combined volume of coating solids for all the coatings used during each month, using Equation 2 of this section:

$$V_{st} = \sum_{i=1}^{m} \left(Vol_{c,i}\right)\left(V_{s,i}\right) \qquad \text{(Eq. 2)}$$

Where:

V_{st} = Total volume of coating solids used during the month, liters.

$Vol_{c,i}$ = Total volume of coating, i, used during the month, liters.

$V_{s,i}$ = Volume fraction of coating solids for coating, i, liter solids per liter coating, determined according to § 63.3941(b).

m = Number of coatings used during the month.

(g) *Calculate the organic HAP emission rate.* Calculate the organic HAP emission rate for the compliance period, kg (lb) organic HAP emitted per liter (gal) coating solids used, using Equation 3 of this section:

$$H_{yr} = \frac{\sum_{y=1}^{n} H_e}{\sum_{y=1}^{n} V_{st}} \qquad \text{(Eq. 3)}$$

Where:

H_{yr} = Average organic HAP emission rate for the compliance period, kg organic HAP emitted per liter coating solids used.

H_e = Total mass of organic HAP emissions from all materials used during month, y, kg, as calculated by Equation 1 of this section.

V_{st} = Total volume of coating solids used during month, y, liters, as calculated by Equation 2 of this section.

y = Identifier for months.

n = Number of full or partial months in the compliance period (for the initial compliance period, n equals 12 if the compliance date falls on the first day of a month; otherwise n equals 13; for all following compliance periods, n equals 12).

(h) *Compliance demonstration.* The organic HAP emission rate for the initial compliance period calculated using Equation 3 of this section must be less than or equal to the applicable emission limit for each subcategory in § 63.3890 or the predominant activity or facility-specific emission limit allowed in § 63.3890(c). You must keep all records as required by §§ 63.3930 and 63.3931. As part of the notification of compliance status required by § 63.3910, you must identify the coating operation(s) for which you used the emission rate without add-on controls option and submit a statement that the coating operation(s) was (were) in compliance with the emission limitations during the initial compliance period because the organic HAP emission rate was less than or equal to the applicable emission limit in § 63.3890, determined according to the procedures in this section.

[69 FR 157, Jan. 2, 2004, as amended at 85 FR 41141, July 8, 2020]

§ 63.3952 How do I demonstrate continuous compliance with the emission limitations?

(a) To demonstrate continuous compliance, the organic HAP emission rate for each compliance period, determined according to § 63.3951(a) through (g), must be less than or equal to the applicable emission limit in § 63.3890. A compliance period consists of 12 months. Each month after the end of the initial compliance period described in § 63.3950 is the end of a compliance period consisting of that month and the preceding 11 months. You must perform

sfrattini on LAPJZKW1R2 with $$_JOB
VerDate Sep<11>2014 09:16 Apr 04, 2023 Jkt 256165 PO 00000 Frm 00769 Fmt 8010 Sfmt 8010 Q:\40\256165.XXX PC31
ER02JA04.009</MATH> ER02JA04.010</MATH>

the calculations in § 63.3951(a) through (g) on a monthly basis using data from the previous 12 months of operation. If you are complying with a facility-specific emission limit under § 63.3890(c), you must also perform the calculation using Equation 1 in § 63.3890(c)(2) on a monthly basis using the data from the previous 12 months of operation.

(b) If the organic HAP emission rate for any 12-month compliance period exceeded the applicable emission limit in § 63.3890, this is a deviation from the emission limitation for that compliance period and must be reported as specified in §§ 63.3910(c)(6) and 63.3920(a)(6).

(c) As part of each semiannual compliance report required by § 63.3920, you must identify the coating operation(s) for which you used the emission rate without add-on controls option. If there were no deviations from the emission limitations, you must submit a statement that the coating operation(s) was (were) in compliance with the emission limitations during the reporting period because the organic HAP emission rate for each compliance period was less than or equal to the applicable emission limit in § 63.3890, determined according to § 63.3951(a) through (g).

(d) You must maintain records as specified in §§ 63.3930 and 63.3931.

COMPLIANCE REQUIREMENTS FOR THE EMISSION RATE WITH ADD-ON CONTROLS OPTION

§ 63.3960 By what date must I conduct performance tests and other initial compliance demonstrations?

(a) *New and reconstructed affected sources.* For a new or reconstructed affected source, you must meet the requirements of paragraphs (a)(1) through (4) of this section.

(1) All emission capture systems, add-on control devices, and CPMS must be installed and operating no later than the applicable compliance date specified in § 63.3883. Except for solvent recovery systems for which you conduct liquid-liquid material balances according to § 63.3961(j), you must conduct according to the schedule in paragraphs (a)(1)(i) and (ii) of this section initial and periodic performance tests of each capture system and add-on control device according to the procedures in §§ 63.3964, 63.3965, and 63.3966 and establish the operating limits required by § 63.3892. For a solvent recovery system for which you conduct liquid-liquid material balances according to § 63.3961(j), you must initiate the first material balance no later than the applicable compliance date specified in § 63.3883. For magnet wire coating operations, you may, with approval, conduct a performance test of one representative magnet wire coating machine for each group of identical or very similar magnet wire coating machines.

(i) You must conduct the initial performance test and establish the operating limits required by § 63.3892 no later than 180 days after the applicable compliance date specified in § 63.3883.

(ii) You must conduct periodic performance tests and establish the operating limits required by § 63.3892 within 5 years following the previous performance test. You must conduct the first periodic performance test before July 8, 2023, unless you are already required to complete periodic performance tests as a requirement of renewing your facility's operating permit under 40 CFR part 70 or 40 CFR part 71 and have conducted a performance test on or after July 8, 2018. Thereafter you must conduct a performance test no later than 5 years following the previous performance test. Operating limits must be confirmed or reestablished during each performance test. For any control device for which you are using the catalytic oxidizer control option at § 63.3967(b) and following the catalyst maintenance procedures in § 63.3967(b)(4), you are not required to conduct periodic testing control device performance testing as specified by this paragraph. For any control device for which instruments are used to continuously measure organic compound emissions, you are not required to conduct periodic control device performance testing as specified by this paragraph.

(2) You must develop and begin implementing the work practice plan required by § 63.3893 no later than the compliance date specified in § 63.3883.

sfrattini on LAPJZKW1R2 with $$_JOB
VerDate Sep<11>2014 09:16 Apr 04, 2023 Jkt 256165 PO 00000 Frm 00770 Fmt 8010 Sfmt 8010 Q:\40\256165.XXX PC31

(3) You must complete the initial compliance demonstration for the initial compliance period according to the requirements of §63.3961. The initial compliance period begins on the applicable compliance date specified in §63.3883 and ends on the last day of the 12th month following the compliance date. If the compliance date occurs on any day other than the first day of a month, then the initial compliance period extends through the end of that month plus the next 12 months. You must determine the mass of organic HAP emissions and volume of coatings solids used each month and then calculate an organic HAP emission rate at the end of the initial compliance period. The initial compliance demonstration includes the results of emission capture system and add-on control device performance tests conducted according to §§63.3964, 63.3965, and 63.3966; results of liquid-liquid material balances conducted according to §63.3961(j); calculations according to §63.3961 and supporting documentation showing that during the initial compliance period the organic HAP emission rate was equal to or less than the applicable emission limit in §63.3890; the operating limits established during the performance tests and the results of the continuous parameter monitoring required by §63.3968; and documentation of whether you developed and implemented the work practice plan required by §63.3893.

(4) For the initial compliance demonstration, you do not need to comply with the operating limits for the emission capture system and add-on control device required by §63.3892 until after you have completed the initial performance tests specified in paragraph (a)(1) of this section. Instead, you must maintain a log detailing the operation and maintenance of the emission capture system, add-on control device, and continuous parameter monitors during the period between the compliance date and the performance test. You must begin complying with the operating limits established based on the initial performance tests specified in paragraph (a)(1) of this section for your affected source on the date you complete the performance tests. For magnet wire coating operations, you must begin complying with the operating limits for all identical or very similar magnet wire coating machines on the date you complete the performance test of a representative magnet wire coating machine. The requirements in this paragraph (a)(4) do not apply to solvent recovery systems for which you conduct liquid-liquid material balances according to the requirements in §63.3961(j).

(b) *Existing affected sources*. For an existing affected source, you must meet the requirements of paragraphs (b)(1) through (3) of this section.

(1) All emission capture systems, add-on control devices, and CPMS must be installed and operating no later than the applicable compliance date specified in §63.3883. Except for magnet wire coating operations and solvent recovery systems for which you conduct liquid-liquid material balances according to §63.3961(j), you must conduct according to the schedule in paragraphs (b)(1)(i) and (ii) of this section initial and periodic performance tests of each capture system and add-on control device according to the procedures in §§63.3964, 63.3965, and 63.3966 and establish the operating limits required by §63.3892. For magnet wire coating operations, you may, with approval, conduct a performance test of a single magnet wire coating machine that represents identical or very similar magnet wire coating machines. For a solvent recovery system for which you conduct liquid-liquid material balances according to §63.3961(j), you must initiate the first material balance no later than the compliance date specified in §63.3883.

(i) You must conduct the initial performance test and establish the operating limits required by §63.3892 no later than 180 days after the applicable compliance date specified in §63.3883.

(ii) You must conduct periodic performance tests and establish the operating limits required by §63.3892 within 5 years following the previous performance test. You must conduct the first periodic performance test before July 8, 2020, unless you are already required to complete periodic performance tests as a requirement of renewing your facility's operating permit under 40 CFR

sfrattini on LAPJZKW1R2 with $$_JOB
VerDate Sep<11>2014 09:16 Apr 04, 2023 Jkt 256165 PO 00000 Frm 00771 Fmt 8010 Sfmt 8010 Q:\40\256165.XXX PC31

part 70 or 40 CFR part 71 and have conducted a performance test on or after July 8, 2018. Thereafter you must conduct a performance test no later than 5 years following the previous performance test. Operating limits must be confirmed or reestablished during each performance test. For any control device for which you are using the catalytic oxidizer control option at § 63.3967(b) and following the catalyst maintenance procedures in § 63.3967(b)(4), you are not required to conduct periodic testing control device performance testing as specified by this paragraph. For any control device for which instruments are used to continuously measure organic compound emissions, you are not required to conduct periodic control device performance testing as specified by this paragraph.

(2) You must develop and begin implementing the work practice plan required by § 63.3893 no later than the compliance date specified in § 63.3883.

(3) You must complete the initial compliance demonstration for the initial compliance period according to the requirements of § 63.3961. The initial compliance period begins on the applicable compliance date specified in § 63.3883 and ends on the last day of the 12th month following the compliance date. If the compliance date occurs on any day other than the first day of a month, then the initial compliance period extends through the end of that month plus the next 12 months. You must determine the mass of organic HAP emissions and volume of coatings solids used each month and then calculate an organic HAP emission rate at the end of the initial compliance period. The initial compliance demonstration includes the results of emission capture system and add-on control device performance tests conducted according to §§ 63.3964, 63.3965, and 63.3966; results of liquid-liquid material balances conducted according to § 63.3961(j); calculations according to § 63.3961 and supporting documentation showing that during the initial compliance period the organic HAP emission rate was equal to or less than the applicable emission limit in § 63.3890; the operating limits established during the performance tests and the results of the continuous parameter monitoring required by § 63.3968; and documentation of whether you developed and implemented the work practice plan required by § 63.3893.

(c) You are not required to conduct an initial performance test to determine capture efficiency or destruction efficiency of a capture system or control device if you receive approval to use the results of a performance test that has been previously conducted on that capture system or control device. Any such previous tests must meet the conditions described in paragraphs (c)(1) through (3) of this section. You are still required to conduct a periodic performance test according to the applicable requirements of paragraphs (a)(1)(ii) and (b)(2)(ii) of this section.

(1) The previous test must have been conducted using the methods and conditions specified in this subpart.

(2) Either no process or equipment changes have been made since the previous test was performed or the owner or operator must be able to demonstrate that the results of the performance test, reliably demonstrate compliance despite process or equipment changes.

(3) Either the required operating parameters were established in the previous test or sufficient data were collected in the previous test to establish the required operating parameters.

[69 FR 157, Jan. 2, 2004, as amended at 85 FR 41142, July 8, 2020]

§ 63.3961 How do I demonstrate initial compliance?

(a) You may use the emission rate with add-on controls option for any coating operation, for any group of coating operations in the affected source, or for all of the coating operations in the affected source. You may include both controlled and uncontrolled coating operations in a group for which you use this option. You must use either the compliant material option or the emission rate without add-on controls option for any coating operation in the affected source for which you do not use the emission rate with add-on controls option. To demonstrate initial compliance, the coating operation(s) for which you use the

sfrattini on LAPJZKW1R2 with $$_JOB
VerDate Sep<11>2014 09:16 Apr 04, 2023 Jkt 256165 PO 00000 Frm 00772 Fmt 8010 Sfmt 8010 Q:\40\256165.XXX PC31

emission rate with add-on controls option must meet the applicable emission limitations in §§63.3890, 63.3892, and 63.3893. You must conduct a separate initial compliance demonstration for each general use, magnet wire, rubber-to-metal, and extreme performance fluoropolymer coating operation, unless you are demonstrating compliance with a predominant activity or facility-specific emission limit as provided in §63.3890(c). If you are demonstrating compliance with a predominant activity or facility-specific emission limit as provided in §63.4490(c), you must demonstrate that all coating operations included in the predominant activity determination or calculation of the facility-specific emission limit comply with that limit. You must meet all the requirements of this section. When calculating the organic HAP emission rate according to this section, do not include any coatings, thinners and/or other additives, or cleaning materials used on coating operations for which you use the compliant material option or the emission rate without add-on controls option. You do not need to redetermine the mass of organic HAP in coatings, thinners and/or other additives, or cleaning materials that have been reclaimed onsite (or reclaimed off-site if you have documentation showing that you received back the exact same materials that were sent off-site) and reused in the coatings operation(s) for which you use the emission rate with add-on controls option. If you use coatings, thinners and/or other additives, or cleaning materials that have been reclaimed on-site, the amount of each used in a month may be reduced by the amount of each that is reclaimed. That is, the amount used may be calculated as the amount consumed to account for materials that are reclaimed.

(b) *Compliance with operating limits.* Except as provided in §63.3960(a)(4), and except for solvent recovery systems for which you conduct liquid-liquid material balances according to the requirements of paragraph (j) of this section, you must establish and demonstrate continuous compliance during the initial compliance period with the operating limits required by §63.3892, using the procedures specified in §§63.3967 and 63.3968.

(c) *Compliance with work practice requirements.* You must develop, implement, and document your implementation of the work practice plan required by §63.3893 during the initial compliance period, as specified in §63.3930.

(d) *Compliance with emission limits.* You must follow the procedures in paragraphs (e) through (n) of this section to demonstrate compliance with the applicable emission limit in §63.3890 for each affected source in each subcategory.

(e) *Determine the mass fraction of organic HAP, density, volume used, and volume fraction of coating solids.* Follow the procedures specified in §63.3951(a) through (d) to determine the mass fraction of organic HAP, density, and volume of each coating, thinner and/or other additive, and cleaning material used during each month; and the volume fraction of coating solids for each coating used during each month.

(f) *Calculate the total mass of organic HAP emissions before add-on controls.* Using Equation 1 of §63.3951, calculate the total mass of organic HAP emissions before add-on controls from all coatings, thinners and/or other additives, and cleaning materials used during each month in the coating operation or group of coating operations for which you use the emission rate with add-on controls option.

(g) *Calculate the organic HAP emission reduction for each controlled coating operation.* Determine the mass of organic HAP emissions reduced for each controlled coating operation during each month. The emission reduction determination quantifies the total organic HAP emissions that pass through the emission capture system and are destroyed or removed by the add-on control device. Use the procedures in paragraph (h) of this section to calculate the mass of organic HAP emission reduction for each controlled coating operation using an emission capture system and add-on control device other than a solvent recovery system for which you conduct liquid-liquid material balances. For each controlled coating operation using a solvent recovery system for which you conduct a liquid-

sfrattini on LAPJZKW1R2 with $$_JOB
VerDate Sep<11>2014 09:16 Apr 04, 2023 Jkt 256165 PO 00000 Frm 00773 Fmt 8010 Sfmt 8010 Q:\40\256165.XXX PC31

liquid material balance, use the procedures in paragraph (j) of this section to calculate the organic HAP emission reduction.

(h) *Calculate the organic HAP emission reduction for each controlled coating operation not using liquid-liquid material balance.* Use Equation 1 of this section to calculate the organic HAP emission reduction for each controlled coating operation using an emission capture system and add-on control device other than a solvent recovery system for which you conduct liquid-liquid material balances. The calculation applies the emission capture system efficiency and add-on control device efficiency to the mass of organic HAP contained in the coatings, thinners and/or other additives, and cleaning materials that are used in the coating operation served by the emission capture system and add-on control device during each month. You must assume zero efficiency for the emission capture system and add-on control device for any period of time a deviation specified in § 63.3963(c) or (d) occurs in the controlled coating operation, including a deviation during a period of startup, shutdown, or malfunction, unless you have other data indicating the actual efficiency of the emission capture system and add-on control device and the use of these data is approved by the Administrator. Equation 1 of this section treats the materials used during such a deviation as if they were used on an uncontrolled coating operation for the time period of the deviation.

$$H_C = \left(A_C + B_C + C_C - R_W - H_{UNC}\right)\left(\frac{CE}{100} \times \frac{DRE}{100}\right) \qquad \text{(Eq. 1)}$$

Where:

H_C = Mass of organic HAP emission reduction for the controlled coating operation during the month, kg.

A_C = Total mass of organic HAP in the coatings used in the controlled coating operation during the month, kg, as calculated in Equation 1A of this section.

B_C = Total mass of organic HAP in the thinners and/or other additives used in the controlled coating operation during the month, kg, as calculated in Equation 1B of this section.

C_C = Total mass of organic HAP in the cleaning materials used in the controlled coating operation during the month, kg, as calculated in Equation 1C of this section.

R_W = Total mass of organic HAP in waste materials sent or designated for shipment to a hazardous waste TSDF for treatment or disposal during the compliance period, kg, determined according to § 63.3951(e)(4). (You may assign a value of zero to R_W if you do not wish to use this allowance.)

H_{UNC} = Total mass of organic HAP in the coatings, thinners and/or other additives, and cleaning materials used during all deviations specified in § 63.3963(c) and (d) that occurred during the month in the controlled coating operation, kg, as calculated in Equation 1D of this section.

CE = Capture efficiency of the emission capture system vented to the add-on control device, percent. Use the test methods and procedures specified in §§ 63.3964 and 63.3965 to measure and record capture efficiency.

DRE = Organic HAP destruction or removal efficiency of the add-on control device, percent. Use the test methods and procedures in §§ 63.3964 and 63.3966 to measure and record the organic HAP destruction or removal efficiency.

(1) Calculate the mass of organic HAP in the coatings used in the controlled coating operation, kg (lb), using Equation 1A of this section:

$$A_C = \sum_{i=1}^{m}\left(Vol_{c,i}\right)\left(D_{c,i}\right)\left(W_{c,i}\right) \qquad \text{(Eq. 1A)}$$

sfrattini on LAPJZKW1R2 with $$_JOB
VerDate Sep<11>2014 09:16 Apr 04, 2023 Jkt 256165 PO 00000 Frm 00774 Fmt 8010 Sfmt 8006 Q:\40\256165.XXX PC31
ER02JA04.011</MATH> ER02JA04.012</MATH>

Where:

A_C = Total mass of organic HAP in the coatings used in the controlled coating operation during the month, kg.

$Vol_{c,i}$ = Total volume of coating, i, used during the month, liters.

$D_{c,i}$ = Density of coating, i, kg per liter.

$W_{c,i}$ = Mass fraction of organic HAP in coating, i, kg per kg. For reactive adhesives as defined in §63.3981, use the mass fraction of organic HAP that is emitted as determined using the method in appendix A to subpart PPPP of this part.

m = Number of different coatings used.

(2) Calculate the mass of organic HAP in the thinners and/or other additives used in the controlled coating operation, kg (lb), using Equation 1B of this section:

$$B_C = \sum_{j=1}^{n} \left(Vol_{t,j}\right)\left(D_{t,j}\right)\left(W_{t,j}\right) \qquad \text{(Eq. 1B)}$$

Where:

B_C = Total mass of organic HAP in the thinners and/or other additives used in the controlled coating operation during the month, kg.

$Vol_{t,j}$ = Total volume of thinner and/or other additive, j, used during the month, liters.

$D_{t,j}$ = Density of thinner and/or other additive, j, kg per liter.

$W_{t,j}$ = Mass fraction of organic HAP in thinner and/or other additive, j, kg per kg. For reactive adhesives as defined in §63.3981, use the mass fraction of organic HAP that is emitted as determined using the method in appendix A to subpart PPPP of this part.

n = Number of different thinners and/or other additives used.

(3) Calculate the mass of organic HAP in the cleaning materials used in the controlled coating operation during the month, kg (lb), using Equation 1C of this section:

$$C_C = \sum_{k=1}^{p} \left(Vol_{s,k}\right)\left(D_{s,k}\right)\left(W_{s,k}\right) \qquad \text{(Eq. 1C)}$$

Where:

C_C = Total mass of organic HAP in the cleaning materials used in the controlled coating operation during the month, kg.

$Vol_{s,k}$ = Total volume of cleaning material, k, used during the month, liters.

$D_{s,k}$ = Density of cleaning material, k, kg per liter.

$W_{s,k}$ = Mass fraction of organic HAP in cleaning material, k, kg per kg.

p = Number of different cleaning materials used.

(4) Calculate the mass of organic HAP in the coatings, thinners and/or other additives, and cleaning materials used in the controlled coating operation during deviations specified in §63.3963(c) and (d), using Equation 1D of this section:

$$H_{UNC} = \sum_{h=1}^{q} \left(Vol_h\right)\left(D_h\right)\left(W_h\right) \qquad \text{(Eq. 1D)}$$

Where:

H_{UNC} = Total mass of organic HAP in the coatings, thinners and/or other additives, and cleaning materials used during all deviations specified in §63.3963(c) and (d) that occurred during the month in the controlled coating operation, kg.

Vol_h = Total volume of coating, thinner and/or other additive, or cleaning material, h, used in the controlled coating operation during deviations, liters.

sfrattini on LAPJZKW1R2 with $$_JOB
VerDate Sep<11>2014 09:16 Apr 04, 2023 Jkt 256165 PO 00000 Frm 00775 Fmt 8010 Sfmt 8010 Q:\40\256165.XXX PC31
ER02JA04.013</MATH> ER02JA04.014</MATH> ER02JA04.015</MATH>

D_h = Density of coating, thinner and/or other additives, or cleaning material, h, kg per liter.

W_h = Mass fraction of organic HAP in coating, thinner and/or other additives, or cleaning material, h, kg organic HAP per kg coating. For reactive adhesives as defined in § 63.3981, use the mass fraction of organic HAP that is emitted as determined using the method in appendix A to subpart PPPP of this part.

q = Number of different coatings, thinners and/or other additives, and cleaning materials used.

(i) [Reserved]

(j) *Calculate the organic HAP emission reduction for each controlled coating operation using liquid-liquid material balances.* For each controlled coating operation using a solvent recovery system for which you conduct liquid-liquid material balances, calculate the organic HAP emission reduction by applying the volatile organic matter collection and recovery efficiency to the mass of organic HAP contained in the coatings, thinners and/or other additives, and cleaning materials that are used in the coating operation controlled by the solvent recovery system during each month. Perform a liquid-liquid material balance for each month as specified in paragraphs (j)(1) through (6) of this section. Calculate the mass of organic HAP emission reduction by the solvent recovery system as specified in paragraph (j)(7) of this section.

(1) For each solvent recovery system, install, calibrate, maintain, and operate according to the manufacturer's specifications, a device that indicates the cumulative amount of volatile organic matter recovered by the solvent recovery system each month. The device must be initially certified by the manufacturer to be accurate to within ±2.0 percent of the mass of volatile organic matter recovered.

(2) For each solvent recovery system, determine the mass of volatile organic matter recovered for the month, based on measurement with the device required in paragraph (j)(1) of this section.

(3) Determine the mass fraction of volatile organic matter for each coating, thinner and/or other additive, and cleaning material used in the coating operation controlled by the solvent recovery system during the month, kg volatile organic matter per kg coating. You may determine the volatile organic matter mass fraction using EPA Method 24 of 40 CFR part 60, appendix A–7, ASTM D2369–10 (Reapproved 2015)[e] (incorporated by reference, *see* § 63.14), or an EPA approved alternative method, or you may use information provided by the manufacturer or supplier of the coating. In the event of any inconsistency between information provided by the manufacturer or supplier and the results of EPA Method 24 of 40 CFR part 60, appendix A–7, ASTM D2369–10 (Reapproved 2015)[e], or an approved alternative method, the test method results will take precedence unless, after consultation you demonstrate to the satisfaction of the enforcement agency that the formulation data are correct.

(4) Determine the density of each coating, thinner and/or other additive, and cleaning material used in the coating operation controlled by the solvent recovery system during the month, kg per liter, according to § 63.3951(c).

(5) Measure the volume of each coating, thinner and/or other additive, and cleaning material used in the coating operation controlled by the solvent recovery system during the month, liters.

(6) Each month, calculate the solvent recovery system's volatile organic matter collection and recovery efficiency, using Equation 2 of this section:

$$R_V = 100 \frac{M_{VR}}{\sum_{i=1}^{m} Vol_i D_i WV_{c,i} + \sum_{j=1}^{n} Vol_j D_j WV_{t,j} + \sum_{k=1}^{p} Vol_k D_k WV_{s,k}} \qquad \text{(Eq. 2)}$$

sfrattini on LAPJZKW1R2 with $$_JOB
VerDate Sep<11>2014 09:16 Apr 04, 2023 Jkt 256165 PO 00000 Frm 00776 Fmt 8010 Sfmt 8006 Q:\40\256165.XXX PC31
ER02JA04.016</MATH>

Where:

R_V = Volatile organic matter collection and recovery efficiency of the solvent recovery system during the month, percent.

M_{VR} = Mass of volatile organic matter recovered by the solvent recovery system during the month, kg.

Vol_i = Volume of coating, i, used in the coating operation controlled by the solvent recovery system during the month, liters.

D_i = Density of coating, i, kg per liter.

$WV_{c,i}$ = Mass fraction of volatile organic matter for coating, i, kg volatile organic matter per kg coating. For reactive adhesives as defined in §63.3981, use the mass fraction of organic HAP that is emitted as determined using the method in appendix A to subpart PPPP of this part.

Vol_j = Volume of thinner and/or other additive, j, used in the coating operation controlled by the solvent recovery system during the month, liters.

D_j = Density of thinner and/or other additive, j, kg per liter.

$WV_{t,j}$ = Mass fraction of volatile organic matter for thinner and/or other additive, j, kg volatile organic matter per kg thinner and/or other additive. For reactive adhesives as defined in §63.3981, use the mass fraction of organic HAP that is emitted as determined using the method in appendix A to subpart PPPP of this part.

Vol_k = Volume of cleaning material, k, used in the coating operation controlled by the solvent recovery system during the month, liters.

D_k = Density of cleaning material, k, kg per liter.

$WV_{s,k}$ = Mass fraction of volatile organic matter for cleaning material, k, kg volatile organic matter per kg cleaning material.

m = Number of different coatings used in the coating operation controlled by the solvent recovery system during the month.

n = Number of different thinners and/or other additives used in the coating operation controlled by the solvent recovery system during the month.

p = Number of different cleaning materials used in the coating operation controlled by the solvent recovery system during the month.

(7) Calculate the mass of organic HAP emission reduction for the coating operation controlled by the solvent recovery system during the month, using Equation 3 of this section and according to paragraphs (j)(7)(i) through (iii) of this section:

$$H_{CSR} = \left(A_{CSR} + B_{CSR} + C_{CSR}\right)\left(\frac{R_V}{100}\right) \qquad \text{(Eq. 3)}$$

Where:

H_{CSR} = Mass of organic HAP emission reduction for the coating operation controlled by the solvent recovery system using a liquid-liquid material balance during the month, kg.

A_{CSR} = Total mass of organic HAP in the coatings used in the coating operation controlled by the solvent recovery system, kg, calculated using Equation 3A of this section.

B_{CSR} = Total mass of organic HAP in the thinners and/or other additives used in the coating operation controlled by the solvent recovery system, kg, calculated using Equation 3B of this section.

C_{CSR} = Total mass of organic HAP in the cleaning materials used in the coating operation controlled by the solvent recovery system, kg, calculated using Equation 3C of this section.

R_V = Volatile organic matter collection and recovery efficiency of the solvent recovery system, percent, from Equation 2 of this section.

(i) Calculate the mass of organic HAP in the coatings used in the coating operation controlled by the solvent recovery system, kg, using Equation 3A of this section.

$$A_{CSR} = \sum_{i=1}^{m}\left(Vol_{c,i}\right)\left(D_{c,i}\right)\left(W_{c,i}\right) \qquad \text{(Eq. 3A)}$$

sfrattini on LAPJZKW1R2 with $$_JOB
VerDate Sep<11>2014 09:16 Apr 04, 2023 Jkt 256165 PO 00000 Frm 00777 Fmt 8010 Sfmt 8006 Q:\40\256165.XXX PC31
ER02JA04.017</MATH> ER02JA04.018</GPH>

Where:

A_{CSR} = Total mass of organic HAP in the coatings used in the coating operation controlled by the solvent recovery system during the month, kg.

$Vol_{c,i}$ = Total volume of coating, i, used during the month in the coating operation controlled by the solvent recovery system, liters.

$D_{c,i}$ = Density of coating, i, kg per liter.

$W_{c,i}$ = Mass fraction of organic HAP in coating, i, kg organic HAP per kg coating. For reactive adhesives as defined in § 63.3981, use the mass fraction of organic HAP that is emitted as determined using the method in appendix A to subpart PPPP of this part.

m = Number of different coatings used.

(ii) Calculate the mass of organic HAP in the thinners and/or other additives used in the coating operation controlled by the solvent recovery system, kg, using Equation 3B of this section:

$$B_{CSR} = \sum_{j-1}^{n} \left(Vol_{t,j}\right)\left(D_{t,j}\right)\left(W_{t,j}\right) \qquad \text{(Eq. 3B)}$$

Where:

B_{CSR} = Total mass of organic HAP in the thinners and/or other additives used in the coating operation controlled by the solvent recovery system during the month, kg.

$Vol_{t,j}$ = Total volume of thinner and/or other additive, j, used during the month in the coating operation controlled by the solvent recovery system, liters.

$D_{t,j}$ = Density of thinner and/or other additive, j, kg per liter.

$W_{t,j}$ = Mass fraction of organic HAP in thinner and/or other additive, j, kg lb organic HAP per kg thinner and/or other additive. For reactive adhesives as defined in § 63.3981, use the mass fraction of organic HAP that is emitted as determined using the method in appendix A to subpart PPPP of this part.

n = Number of different thinners and/or other additives used.

(iii) Calculate the mass of organic HAP in the cleaning materials used in the coating operation controlled by the solvent recovery system during the month, kg, using Equation 3C of this section:

$$C_{CSR} = \sum_{k=1}^{p} \left(Vol_{s,k}\right)\left(D_{s,k}\right)\left(W_{s,k}\right) \qquad \text{(Eq. 3C)}$$

Where:

C_{CSR} = Total mass of organic HAP in the cleaning materials used in the coating operation controlled by the solvent recovery system during the month, kg.

$Vol_{s,k}$ = Total volume of cleaning material, k, used during the month in the coating operation controlled by the solvent recovery system, liters.

$D_{s,k}$ = Density of cleaning material, k, kg per liter.

$W_{s,k}$ = Mass fraction of organic HAP in cleaning material, k, kg organic HAP per kg cleaning material.

p = Number of different cleaning materials used.

(k) *Calculate the total volume of coating solids used.* Determine the total volume of coating solids used, liters, which is the combined volume of coating solids for all the coatings used during each month in the coating operation or group of coating operations for which you use the emission rate with add-on controls option, using Equation 2 of § 63.3951.

(l) *Calculate the mass of organic HAP emissions for each month.* Determine the mass of organic HAP emissions, kg, during each month, using Equation 4 of this section:

sfrattini on LAPJZKW1R2 with $$_JOB
VerDate Sep<11>2014 09:16 Apr 04, 2023 Jkt 256165 PO 00000 Frm 00778 Fmt 8010 Sfmt 8010 Q:\40\256165.XXX PC31
ER02JA04.019</GPH> ER02JA04.020</GPH>

$$H_{HAP} = H_e - \sum_{i=1}^{q}\left(H_{c,i}\right) - \sum_{j=1}^{r}\left(H_{CSR,j}\right) \qquad \text{(Eq. 4)}$$

where:

H_{HAP} = Total mass of organic HAP emissions for the month, kg.

H_e = Total mass of organic HAP emissions before add-on controls from all the coatings, thinners and/or other additives, and cleaning materials used during the month, kg, determined according to paragraph (f) of this section.

$H_{C,i}$ = Total mass of organic HAP emission reduction for controlled coating operation, i, not using a liquid-liquid material balance, during the month, kg, from Equation 1 of this section.

$H_{CSR,j}$ = Total mass of organic HAP emission reduction for coating operation, j, controlled by a solvent recovery system using a liquid-liquid material balance, during the month, kg, from Equation 3 of this section.

q = Number of controlled coating operations not controlled by a solvent recovery system using a liquid-liquid material balance.

r = Number of coating operations controlled by a solvent recovery system using a liquid-liquid material balance.

(m) *Calculate the organic HAP emission rate for the compliance period.* Determine the organic HAP emission rate for the compliance period, kg (lb) of organic HAP emitted per liter (gal) coating solids used, using Equation 5 of this section:

$$H_{annual} = \frac{\sum_{y=1}^{n} H_{HAP,y}}{\sum_{y=1}^{n} V_{st,y}} \qquad \text{(Eq. 5)}$$

Where:

H_{annual} = Organic HAP emission rate for the compliance period, kg organic HAP emitted per liter coating solids used.

$H_{HAP,y}$ = Organic HAP emissions for month, y, kg, determined according to Equation 4 of this section.

$V_{st,y}$ = Total volume of coating solids used during month, y, liters, from Equation 2 of §63.3951.

y = Identifier for months.

n = Number of full or partial months in the compliance period (for the initial compliance period, n equals 12 if the compliance date falls on the first day of a month; otherwise n equals 13; for all following compliance periods, n equals 12).

(n) *Compliance demonstration.* The organic HAP emission rate for the initial compliance period, calculated using Equation 5 of this section, must be less than or equal to the applicable emission limit for each subcategory in §63.3890 or the predominant activity or facility-specific emission limit allowed in §63.3890(c). You must keep all records as required by §§63.3930 and 63.3931. As part of the notification of compliance status required by §63.3910, you must identify the coating operation(s) for which you used the emission rate with add-on controls option and submit a statement that the coating operation(s) was (were) in compliance with the emission limitations during the initial compliance period because the organic HAP emission rate was less than or equal to the applicable emission limit in §63.3890, and you achieved the operating limits required by §63.3892 and the work practice standards required by §63.3893.

[69 FR 157, Jan. 2, 2004, as amended at 85 FR 41143, July 8, 2020]

§63.3962 [Reserved]

§63.3963 How do I demonstrate continuous compliance with the emission limitations?

(a) To demonstrate continuous compliance with the applicable emission limit in §63.3890, the organic HAP emission rate for each compliance period, determined according to the procedures in §63.3961, must be equal to or less than the applicable emission limit in §63.3890. A compliance period consists of 12 months. Each month after the end of the initial compliance period described in §63.3960 is the end of a compliance period consisting of that month and the preceding 11 months. You must perform the calculations in §63.3961 on a monthly basis using data from the previous 12 months of operation. If you are complying with a facility-specific emission limit under

sfrattini on LAPJZKW1R2 with $$_JOB
VerDate Sep<11>2014 09:16 Apr 04, 2023 Jkt 256165 PO 00000 Frm 00779 Fmt 8010 Sfmt 8010 Q:\40\256165.XXX PC31
ER02JA04.021</GPH> ER02JA04.022</GPH>

§ 63.3890(c), you must also perform the calculation using Equation 1 in § 63.3890(c)(2) on a monthly basis using the data from the previous 12 months of operation.

(b) If the organic HAP emission rate for any 12-month compliance period exceeded the applicable emission limit in § 63.3890, this is a deviation from the emission limitation for that compliance period that must be reported as specified in §§ 63.3910(c)(6) and 63.3920(a)(7).

(c) You must demonstrate continuous compliance with each operating limit required by § 63.3892 that applies to you, as specified in Table 1 to this subpart, when the coating line is in operation.

(1) If an operating parameter is out of the allowed range specified in Table 1 to this subpart, this is a deviation from the operating limit that must be reported as specified in §§ 63.3910(c)(6) and 63.3920(a)(7).

(2) If an operating parameter deviates from the operating limit specified in Table 1 to this subpart, then you must assume that the emission capture system and add-on control device were achieving zero efficiency during the time period of the deviation, unless you have other data indicating the actual efficiency of the emission capture system and add-on control device and the use of these data is approved by the Administrator.

(d) You must meet the requirements for bypass lines in § 63.3968(b) for controlled coating operations for which you do not conduct liquid-liquid material balances. If any bypass line is opened and emissions are diverted to the atmosphere when the coating operation is running, this is a deviation that must be reported as specified in §§ 63.3910(c)(6) and 63.3920(a)(7). For the purposes of completing the compliance calculations specified in §§ 63.3961(h), you must treat the materials used during a deviation on a controlled coating operation as if they were used on an uncontrolled coating operation for the time period of the deviation as indicated in Equation 1 of § 63.3961.

(e) You must demonstrate continuous compliance with the work practice standards in § 63.3893. If you did not develop a work practice plan, or you did not implement the plan, or you did not keep the records required by § 63.3930(k)(8), this is a deviation from the work practice standards that must be reported as specified in §§ 63.3910(c)(6) and 63.3920(a)(7).

(f) As part of each semiannual compliance report required in § 63.3920, you must identify the coating operation(s) for which you used the emission rate with add-on controls option. If there were no deviations from the emission limits in § 63.3890, the operating limits in § 63.3892, and the work practice standards in § 63.3893, submit a statement that you were in compliance with the emission limitations during the reporting period because the organic HAP emission rate for each compliance period was less than or equal to the applicable emission limit in § 63.3890, and you achieved the operating limits required by § 63.3892 and the work practice standards required by § 63.3893 during each compliance period.

(g)–(h) [Reserved]

(i) On and after January 5, 2021, deviations that occur due to malfunction of the emission capture system, add-on control device, or coating operation that may affect emission capture or control device efficiency are required to operate in accordance with § 63.3900(b). The Administrator will determine whether the deviations are violations according to the provisions in § 63.3900(b).

(j) You must maintain records as specified in §§ 63.3930 and 63.3931.

[69 FR 157, Jan. 2, 2004, as amended at 71 FR 20465, Apr. 20, 2006; 85 FR 41143, July 8, 2020]

§ 63.3964 What are the general requirements for performance tests?

(a) Before January 5, 2021, you must conduct each performance test required by § 63.3960 according to the requirements in § 63.7(e)(1) and under the conditions in this section, unless you obtain a waiver of the performance test according to the provisions in § 63.7(h). On and after January 5, 2021, you must conduct each performance test required by § 63.3960 according to the requirements in this section unless you obtain a waiver of the performance test according to the provisions in § 63.7(h).

(1) *Representative coating operation operating conditions.* You must conduct

sfrattini on LAPJZKW1R2 with $$_JOB
VerDate Sep<11>2014 09:16 Apr 04, 2023 Jkt 256165 PO 00000 Frm 00780 Fmt 8010 Sfmt 8010 Q:\40\256165.XXX PC31

the performance test under representative operating conditions for the coating operation. Operations during periods of startup, shutdown, or periods of nonoperation do not constitute representative conditions for purposes of conducting a performance test. The owner or operator may not conduct performance tests during periods of malfunction. You must record the process information that is necessary to document operating conditions during the test and explain why the conditions represent normal operation. Upon request, you must make available to the Administrator such records as may be necessary to determine the conditions of performance tests.

(2) *Representative emission capture system and add-on control device operating conditions*. You must conduct the performance test when the emission capture system and add-on control device are operating at a representative flow rate, and the add-on control device is operating at a representative inlet concentration. You must record information that is necessary to document emission capture system and add-on control device operating conditions during the test and explain why the conditions represent normal operation.

(b) You must conduct each performance test of an emission capture system according to the requirements in § 63.3965. You must conduct each performance test of an add-on control device according to the requirements in § 63.3966.

[69 FR 157, Jan. 2, 2004, as amended at 85 FR 41143, July 8, 2020]

§ 63.3965 How do I determine the emission capture system efficiency?

You must use the procedures and test methods in this section to determine capture efficiency as part of each performance test required by § 63.3960.

(a) *Assuming 100 percent capture efficiency*. You may assume the capture system efficiency is 100 percent if both of the conditions in paragraphs (a)(1) and (2) of this section are met:

(1) The capture system meets the criteria in Method 204 of appendix M to 40 CFR part 51 for a PTE and directs all the exhaust gases from the enclosure to an add-on control device.

(2) All coatings, thinners and/or other additives, and cleaning materials used in the coating operation are applied within the capture system; coating solvent flash-off, curing, and drying occurs within the capture system; and the removal or evaporation of cleaning materials from the surfaces they are applied to occurs within the capture system. For example, this criterion is not met if parts enter the open shop environment when being moved between a spray booth and a curing oven.

(b) *Measuring capture efficiency*. If the capture system does not meet both of the criteria in paragraphs (a)(1) and (2) of this section, then you must use one of the three protocols described in paragraphs (c), (d), and (e) of this section to measure capture efficiency. The capture efficiency measurements use TVH capture efficiency as a surrogate for organic HAP capture efficiency. For the protocols in paragraphs (c) and (d) of this section, the capture efficiency measurement must consist of three test runs. Each test run must be at least 3 hours duration or the length of a production run, whichever is longer, up to 8 hours. For the purposes of this test, a production run means the time required for a single part to go from the beginning to the end of the production, which includes surface preparation activities and drying and curing time.

(c) *Liquid-to-uncaptured-gas protocol using a temporary total enclosure or building enclosure*. The liquid-to-uncaptured-gas protocol compares the mass of liquid TVH in materials used in the coating operation to the mass of TVH emissions not captured by the emission capture system. Use a temporary total enclosure or a building enclosure and the procedures in paragraphs (c)(1) through (6) of this section to measure emission capture system efficiency using the liquid-to-uncaptured-gas protocol.

(1) Either use a building enclosure or construct an enclosure around the coating operation where coatings, thinners and/or other additives, and cleaning materials are applied, and all areas where emissions from these applied coatings and materials subsequently occur, such as flash-off, curing, and drying areas. The areas of the coating

sfrattini on LAPJZKW1R2 with $$_JOB
VerDate Sep<11>2014 09:16 Apr 04, 2023 Jkt 256165 PO 00000 Frm 00781 Fmt 8010 Sfmt 8010 Q:\40\256165.XXX PC31

operation where capture devices collect emissions for routing to an add-on control device, such as the entrance and exit areas of an oven or spray booth, must also be inside the enclosure. The enclosure must meet the applicable definition of a temporary total enclosure or building enclosure in Method 204 of appendix M to 40 CFR part 51.

(2) Use Method 204A or 204F of appendix M to 40 CFR part 51 to determine the mass fraction of TVH liquid input from each coating, thinner and/or other additive, and cleaning material used in the coating operation during each capture efficiency test run. To make the determination, substitute TVH for each occurrence of the term VOC in the methods.

(3) Use Equation 1 of this section to calculate the total mass of TVH liquid input from all the coatings, thinners and/or other additives, and cleaning materials used in the coating operation during each capture efficiency test run:

$$TVH_{used} = \sum_{i=1}^{n} (TVH_i)(Vol_i)(D_i) \qquad \text{(Eq. 1)}$$

Where:

TVH_{used} = Mass of liquid TVH in materials used in the coating operation during the capture efficiency test run, kg.

TVH_i = Mass fraction of TVH in coating, thinner and/or other additive, or cleaning material, i, that is used in the coating operation during the capture efficiency test run, kg TVH per kg material.

Vol_i = Total volume of coating, thinner and/or other additive, or cleaning material, i, used in the coating operation during the capture efficiency test run, liters.

D_i = Density of coating, thinner and/or other additive, or cleaning material, i, kg material per liter material.

n = Number of different coatings, thinners and/or other additives, and cleaning materials used in the coating operation during the capture efficiency test run.

(4) Use Method 204D or 204E of appendix M to 40 CFR part 51 to measure the total mass, kg, of TVH emissions that are not captured by the emission capture system. They are measured as they exit the temporary total enclosure or building enclosure during each capture efficiency test run. To make the measurement, substitute TVH for each occurrence of the term VOC in the methods.

(i) Use Method 204D of appendix M to 40 CFR part 51 if the enclosure is a temporary total enclosure.

(ii) Use Method 204E of appendix M to 40 CFR 51 if the enclosure is a building enclosure. During the capture efficiency measurement, all organic compound emitting operations inside the building enclosure, other than the coating operation for which capture efficiency is being determined, must be shut down, but all fans and blowers must be operating normally.

(5) For each capture efficiency test run, determine the percent capture efficiency of the emission capture system using Equation 2 of this section:

$$CE = \frac{(TVH_{used} - TVH_{uncaptured})}{TVH_{used}} \times 100 \qquad \text{(Eq. 2)}$$

Where:

CE = Capture efficiency of the emission capture system vented to the add-on control device, percent.

TVH_{used} = Total mass of TVH liquid input used in the coating operation during the capture efficiency test run, kg.

$TVH_{uncaptured}$ = Total mass of TVH that is not captured by the emission capture system and that exits from the temporary total enclosure or building enclosure during the capture efficiency test run, kg.

(6) Determine the capture efficiency of the emission capture system as the

sfrattini on LAPJZKW1R2 with $$_JOB
VerDate Sep<11>2014 09:16 Apr 04, 2023 Jkt 256165 PO 00000 Frm 00782 Fmt 8010 Sfmt 8010 Q:\40\256165.XXX PC31
ER02JA04.023</GPH> ER02JA04.024</GPH>

average of the capture efficiencies measured in the three test runs.

(d) *Gas-to-gas protocol using a temporary total enclosure or a building enclosure*. The gas-to-gas protocol compares the mass of TVH emissions captured by the emission capture system to the mass of TVH emissions not captured. Use a temporary total enclosure or a building enclosure and the procedures in paragraphs (d)(1) through (5) of this section to measure emission capture system efficiency using the gas-to-gas protocol.

(1) Either use a building enclosure or construct an enclosure around the coating operation where coatings, thinners and/or other additives, and cleaning materials are applied, and all areas where emissions from these applied coatings and materials subsequently occur, such as flash-off, curing, and drying areas. The areas of the coating operation where capture devices collect emissions generated by the coating operation for routing to an add-on control device, such as the entrance and exit areas of an oven or a spray booth, must also be inside the enclosure. The enclosure must meet the applicable definition of a temporary total enclosure or building enclosure in Method 204 of appendix M to 40 CFR part 51.

(2) Use Method 204B or 204C of appendix M to 40 CFR part 51 to measure the total mass, kg, of TVH emissions captured by the emission capture system during each capture efficiency test run as measured at the inlet to the add-on control device. To make the measurement, substitute TVH for each occurrence of the term VOC in the methods.

(i) The sampling points for the Method 204B or 204C measurement must be upstream from the add-on control device and must represent total emissions routed from the capture system and entering the add-on control device.

(ii) If multiple emission streams from the capture system enter the add-on control device without a single common duct, then the emissions entering the add-on control device must be simultaneously measured in each duct and the total emissions entering the add-on control device must be determined.

(3) Use Method 204D or 204E of appendix M to 40 CFR part 51 to measure the total mass, kg, of TVH emissions that are not captured by the emission capture system; they are measured as they exit the temporary total enclosure or building enclosure during each capture efficiency test run. To make the measurement, substitute TVH for each occurrence of the term VOC in the methods.

(i) Use Method 204D of appendix M to 40 CFR part 51 if the enclosure is a temporary total enclosure.

(ii) Use Method 204E of appendix M to 40 CFR part 51 if the enclosure is a building enclosure. During the capture efficiency measurement, all organic compound emitting operations inside the building enclosure, other than the coating operation for which capture efficiency is being determined, must be shut down, but all fans and blowers must be operating normally.

(4) For each capture efficiency test run, determine the percent capture efficiency of the emission capture system using Equation 3 of this section:

$$CE = \frac{TVH_{captured}}{\left(TVH_{captured} + TVH_{uncaptured}\right)} \times 100 \qquad \text{(Eq. 3)}$$

Where:

CE = Capture efficiency of the emission capture system vented to the add-on control device, percent.

$TVH_{captured}$ = Total mass of TVH captured by the emission capture system as measured at the inlet to the add-on control device during the emission capture efficiency test run, kg.

$TVH_{uncaptured}$ = Total mass of TVH that is not captured by the emission capture system and that exits from the temporary total enclosure or building enclosure during the capture efficiency test run, kg.

sfrattini on LAPJZKW1R2 with $$_JOB
VerDate Sep<11>2014 09:16 Apr 04, 2023 Jkt 256165 PO 00000 Frm 00783 Fmt 8010 Sfmt 8010 Q:\40\256165.XXX PC31
ER02JA04.025</GPH>

(5) Determine the capture efficiency of the emission capture system as the average of the capture efficiencies measured in the three test runs.

(e) *Alternative capture efficiency protocol.* As an alternative to the procedures specified in paragraphs (c) and (d) of this section and subject to the approval of the Administrator, you may determine capture efficiency using any other capture efficiency protocol and test methods that satisfy the criteria of either the DQO or LCL approach as described in appendix A to subpart KK of this part.

[69 FR 157, Jan. 2, 2004, as amended at 85 FR 41143, July 8, 2020]

§ 63.3966 How do I determine the add-on control device emission destruction or removal efficiency?

You must use the procedures and test methods in this section to determine the add-on control device emission destruction or removal efficiency as part of the performance test required by § 63.3960. For each performance test, you must conduct three test runs as specified in § 63.7(e)(3) and each test run must last at least 1 hour. If the source is a magnet wire coating machine, you may use the procedures in section 3.0 of appendix A to this subpart as an alternative.

(a) For all types of add-on control devices, use the test methods specified in paragraphs (a)(1) through (5) of this section.

(1) Use Method 1 or 1A of appendix A to 40 CFR part 60, as appropriate, to select sampling sites and velocity traverse points.

(2) Use Method 2, 2A, 2C, 2D, 2F, or 2G of appendix A to 40 CFR part 60, as appropriate, to measure gas volumetric flow rate.

(3) Use Method 3, 3A, or 3B of appendix A to 40 CFR part 60, as appropriate, for gas analysis to determine dry molecular weight.

(4) Use Method 4 of appendix A to 40 CFR part 60, to determine stack gas moisture.

(5) Methods for determining gas volumetric flow rate, dry molecular weight, and stack gas moisture must be performed, as applicable, during each test run.

(b) Measure total gaseous organic mass emissions as carbon at the inlet and outlet of the add-on control device simultaneously, using either EPA Method 25 or 25A of appendix A–7 to 40 CFR part 60.

(1) Use EPA Method 25 of appendix A–7 to 40 CFR part 60 if the add-on control device is an oxidizer and you expect the total gaseous organic concentration as carbon to be more than 50 parts per million (ppm) at the control device outlet.

(2) Use EPA Method 25A of appendix A–7 to 40 CFR part 60 if the add-on control device is an oxidizer and you expect the total gaseous organic concentration as carbon to be 50 ppm or less at the control device outlet.

(3) Use EPA Method 25A of appendix A–7 to 40 CFR part 60 if the add-on control device is not an oxidizer.

(4) You may use EPA Method 18 of appendix A–6 to 40 CFR part 60 to subtract methane emissions from measured total gaseous organic mass emissions as carbon.

(c) If two or more add-on control devices are used for the same emission stream, then you must measure emissions at the outlet to the atmosphere of each device. For example, if one add-on control device is a concentrator with an outlet to the atmosphere for the high-volume dilute stream that has been treated by the concentrator, and a second add-on control device is an oxidizer with an outlet to the atmosphere for the low-volume concentrated stream that is treated with the oxidizer, you must measure emissions at the outlet of the oxidizer and the high volume dilute stream outlet of the concentrator.

(d) For each test run, determine the total gaseous organic emissions mass flow rates for the inlet and the outlet of the add-on control device, using Equation 1 of this section. If there is more than one inlet or outlet to the add-on control device, you must calculate the total gaseous organic mass flow rate using Equation 1 of this section for each inlet and each outlet and then total all of the inlet emissions and total all of the outlet emissions:

sfrattini on LAPJZKW1R2 with $$_JOB
VerDate Sep<11>2014 09:16 Apr 04, 2023 Jkt 256165 PO 00000 Frm 00784 Fmt 8010 Sfmt 8010 Q:\40\256165.XXX PC31

$$M_f = Q_{sd} C_c (12)\ (0.0416)\ \left(10^{-6}\right) \qquad \text{(Eq. 1)}$$

Where:

M_f = Total gaseous organic emissions mass flow rate, kg per hour (h).

C_c = Concentration of organic compounds as carbon in the vent gas, as determined by Method 25 or Method 25A, parts per million by volume (ppmv), dry basis.

Q_{sd} = Volumetric flow rate of gases entering or exiting the add-on control device, as determined by Method 2, 2A, 2C, 2D, 2F, or 2G, dry standard cubic meters/hour (dscm/h).

0.0416 = Conversion factor for molar volume, kg-moles per cubic meter (mol/m^3) (@ 293 Kelvin (K) and 760 millimeters of mercury (mmHg).

(e) For each test run, determine the add-on control device organic emissions destruction or removal efficiency, using Equation 2 of this section:

$$DRE = \frac{M_{fi} - M_{fo}}{M_{fi}} \times 100 \qquad \text{(Eq. 2)}$$

Where:

DRE = Organic emissions destruction or removal efficiency of the add-on control device, percent.

M_{fi} = Total gaseous organic emissions mass flow rate at the inlet(s) to the add-on control device, using Equation 1 of this section, kg/h.

M_{fo} = Total gaseous organic emissions mass flow rate at the outlet(s) of the add-on control device, using Equation 1 of this section, kg/h.

(f) Determine the emission destruction or removal efficiency of the add-on control device as the average of the efficiencies determined in the three test runs and calculated in Equation 2 of this section.

[69 FR 157, Jan. 2, 2004, as amended at 85 FR 41143, July 8, 2020]

§ 63.3967 How do I establish the emission capture system and add-on control device operating limits during the performance test?

During the performance test required by § 63.3960 and described in §§ 63.3964, 63.3965, and 63.3966, you must establish the operating limits required by § 63.3892 according to this section, unless you have received approval for alternative monitoring and operating limits under § 63.8(f) as specified in § 63.3892.

(a) *Thermal oxidizers.* If your add-on control device is a thermal oxidizer, establish the operating limits according to paragraphs (a)(1) and (2) of this section.

(1) During performance tests, you must monitor and record the combustion temperature at least once every 15 minutes during each of the three test runs. You must monitor the temperature in the firebox of the thermal oxidizer or immediately downstream of the firebox before any substantial heat exchange occurs.

(2) For each performance test, use the data collected during the performance test to calculate and record the average combustion temperature maintained during the performance test. This average combustion temperature is the minimum operating limit for your thermal oxidizer.

(b) *Catalytic oxidizers.* If your add-on control device is a catalytic oxidizer, establish the operating limits according to either paragraphs (b)(1) and (2) or paragraphs (b)(3) and (4) of this section. If the source is a magnet wire coating machine, you may use the procedures in section 3.0 of appendix A to this subpart as an alternative.

(1) During performance tests, you must monitor and record the temperature just before the catalyst bed and the temperature difference across the catalyst bed at least once every 15 minutes during each of the three test runs.

sfrattini on LAPJZKW1R2 with $$_JOB
VerDate Sep<11>2014 09:16 Apr 04, 2023 Jkt 256165 PO 00000 Frm 00785 Fmt 8010 Sfmt 8010 Q:\40\256165.XXX PC31
ER02JA04.026</MATH> ER02JA04.027</MATH>

(2) For each performance test, use the data collected during the performance test to calculate and record the average temperature just before the catalyst bed and the average temperature difference across the catalyst bed maintained during the performance test. These are the minimum operating limits for your catalytic oxidizer.

(3) You must monitor the temperature at the inlet to the catalyst bed and implement a site-specific inspection and maintenance plan for your catalytic oxidizer as specified in paragraph (b)(4) of this section. During the performance test, you must monitor and record the temperature just before the catalyst bed at least once every 15 minutes during each of the three test runs. For each performance test, use the data collected during the performance test to calculate and record the average temperature just before the catalyst bed during the performance test. This is the minimum operating limit for your catalytic oxidizer.

(4) You must develop and implement an inspection and maintenance plan for your catalytic oxidizer(s) for which you elect to monitor according to paragraph (b)(3) of this section. The plan must address, at a minimum, the elements specified in paragraphs (b)(4)(i) through (iii) of this section.

(i) Annual sampling and analysis of the catalyst activity (*i.e.*, conversion efficiency) following the manufacturer's or catalyst supplier's recommended procedures. If problems are found during the catalyst activity test, you must replace the catalyst bed or take other corrective action consistent with the manufacturer's recommendations.

(ii) Monthly external inspection of the catalytic oxidizer system, including the burner assembly and fuel supply lines for problems and, as necessary, adjust the equipment to assure proper air-to-fuel mixtures.

(iii) Annual internal inspection of the catalyst bed to check for channeling, abrasion, and settling. If problems are found during the annual internal inspection of the catalyst, you must replace the catalyst bed or take other corrective action consistent with the manufacturer's recommendations. If the catalyst bed is replaced and is not of like or better kind and quality as the old catalyst then you must conduct a new performance test to determine destruction efficiency according to § 63.3966. If a catalyst bed is replaced and the replacement catalyst is of like or better kind and quality as the old catalyst, then a new performance test to determine destruction efficiency is not required and you may continue to use the previously established operating limits for that catalytic oxidizer.

(c) *Regenerative carbon adsorbers*. If your add-on control device is a regenerative carbon adsorber, establish the operating limits according to paragraphs (c)(1) and (2) of this section.

(1) You must monitor and record the total regeneration desorbing gas (*e.g.*, steam or nitrogen) mass flow for each regeneration cycle, and the carbon bed temperature after each carbon bed regeneration and cooling cycle for the regeneration cycle either immediately preceding or immediately following the performance test.

(2) The operating limits for your regenerative carbon adsorber are the minimum total desorbing gas mass flow recorded during the regeneration cycle and the maximum carbon bed temperature recorded after the cooling cycle.

(d) *Condensers*. If your add-on control device is a condenser, establish the operating limits according to paragraphs (d)(1) and (2) of this section.

(1) During performance tests, you must monitor and record the condenser outlet (product side) gas temperature at least once every 15 minutes during each of the three test runs.

(2) For each performance test, use the data collected during the performance test to calculate and record the average condenser outlet (product side) gas temperature maintained during the performance test. This average condenser outlet gas temperature is the maximum operating limit for your condenser.

(e) *Concentrators*. If your add-on control device includes a concentrator, you must establish operating limits for the concentrator according to paragraphs (e)(1) through (4) of this section.

(1) During performance tests, you must monitor and record the desorption concentrate stream gas

sfrattini on LAPJZKW1R2 with $$_JOB
VerDate Sep<11>2014 09:16 Apr 04, 2023 Jkt 256165 PO 00000 Frm 00786 Fmt 8010 Sfmt 8010 Q:\40\256165.XXX PC31

temperature at least once every 15 minutes during each of the three runs of the performance test.

(2) For each performance test, use the data collected during the performance test to calculate and record the average temperature. This is the minimum operating limit for the desorption concentrate gas stream temperature.

(3) During performance tests, you must monitor and record the pressure drop of the dilute stream across the concentrator at least once every 15 minutes during each of the three runs of the performance test.

(4) For each performance test, use the data collected during the performance test to calculate and record the average pressure drop. This is the minimum operating limit for the dilute stream across the concentrator.

(f) *Emission capture systems.* For each capture device that is not part of a PTE that meets the criteria of § 63.3965(a), establish an operating limit for either the gas volumetric flow rate or duct static pressure, as specified in paragraphs (f)(1) and (2) of this section. The operating limit for a PTE is specified in Table 1 to this subpart. If the source is a magnet wire coating machine, you may use the procedures in section 2.0 of appendix A to this subpart as an alternative.

(1) During the capture efficiency determination required by § 63.3960 and described in §§ 63.3964 and 63.3965, you must monitor and record either the gas volumetric flow rate or the duct static pressure for each separate capture device in your emission capture system at least once every 15 minutes during each of the three test runs at a point in the duct between the capture device and the add-on control device inlet.

(2) Calculate and record the average gas volumetric flow rate or duct static pressure for the three test runs for each capture device. This average gas volumetric flow rate or duct static pressure is the minimum operating limit for that specific capture device.

[69 FR 157, Jan. 2, 2004, as amended at 85 FR 41144, July 8, 2020]

§ 63.3968 What are the requirements for continuous parameter monitoring system installation, operation, and maintenance?

(a) *General.* You must install, operate, and maintain each CPMS specified in paragraphs (c), (e), (f), and (g) of this section according to paragraphs (a)(1) through (6) of this section. You must install, operate, and maintain each CPMS specified in paragraphs (b) and (d) of this section according to paragraphs (a)(3) through (5) of this section.

(1) The CPMS must complete a minimum of one cycle of operation for each successive 15-minute period. You must have a minimum of four equally spaced successive cycles of CPMS operation in 1 hour.

(2) You must determine the average of all recorded readings for each successive 3-hour period of the emission capture system and add-on control device operation.

(3) You must record the results of each inspection, calibration, and validation check of the CPMS.

(4) Before January 5, 2021, you must maintain the CPMS at all times and have available necessary parts for routine repairs of the monitoring equipment. On and after January 5, 2021, you must maintain the CPMS at all times in accordance with § 63.3900(b) and keep necessary parts readily available for routine repairs of the monitoring equipment.

(5) Before January 5, 2021, you must operate the CPMS and collect emission capture system and add-on control device parameter data at all times that a controlled coating operation is operating, except during monitoring malfunctions, associated repairs, and required quality assurance or control activities (including, if applicable, calibration checks and required zero and span adjustments). On and after January 5, 2021, you must operate the CPMS and collect emission capture system and add-on control device parameter data at all times in accordance with § 63.3900(b).

(6) You must not use emission capture system or add-on control device

sfrattini on LAPJZKW1R2 with $$_JOB
VerDate Sep<11>2014 09:16 Apr 04, 2023 Jkt 256165 PO 00000 Frm 00787 Fmt 8010 Sfmt 8010 Q:\40\256165.XXX PC31

parameter data recorded during monitoring malfunctions, associated repairs, out-of-control periods, or required quality assurance or control activities when calculating data averages. You must use all the data collected during all other periods in calculating the data averages for determining compliance with the emission capture system and add-on control device operating limits.

(7) A monitoring malfunction is any sudden, infrequent, not reasonably preventable failure of the CPMS to provide valid data. Monitoring failures that are caused in part by poor maintenance or careless operation are not malfunctions. Before January 5, 2021, any period for which the monitoring system is out-of-control and data are not available for required calculations is a deviation from the monitoring requirements. On and after January 5, 2021, except for periods of required quality assurance or control activities, any period for which the CPMS fails to operate and record data continuously as required by paragraph (a)(5) of this section, or generates data that cannot be included in calculating averages as specified in (a)(6) of this section constitutes a deviation from the monitoring requirements.

(b) *Capture system bypass line.* You must meet the requirements of paragraphs (b)(1) and (2) of this section for each emission capture system that contains bypass lines that could divert emissions away from the add-on control device to the atmosphere.

(1) You must monitor or secure the valve or closure mechanism controlling the bypass line in a nondiverting position in such a way that the valve or closure mechanism cannot be opened without creating a record that the valve was opened. The method used to monitor or secure the valve or closure mechanism must meet one of the requirements specified in paragraphs (b)(1)(i) through (v) of this section.

(i) *Flow control position indicator.* Install, calibrate, maintain, and operate according to the manufacturer's specifications a flow control position indicator that takes a reading at least once every 15 minutes and provides a record indicating whether the emissions are directed to the add-on control device or diverted from the add-on control device. The time of occurrence and flow control position must be recorded, as well as every time the flow direction is changed. The flow control position indicator must be installed at the entrance to any bypass line that could divert the emissions away from the add-on control device to the atmosphere.

(ii) *Car-seal or lock-and-key valve closures.* Secure any bypass line valve in the closed position with a car-seal or a lock-and-key type configuration. You must visually inspect the seal or closure mechanism at least once every month to ensure that the valve is maintained in the closed position, and the emissions are not diverted away from the add-on control device to the atmosphere.

(iii) *Valve closure monitoring.* Ensure that any bypass line valve is in the closed (nondiverting) position through monitoring of valve position at least once every 15 minutes. You must inspect the monitoring system at least once every month to verify that the monitor will indicate valve position.

(iv) *Automatic shutdown system.* Use an automatic shutdown system in which the coating operation is stopped when flow is diverted by the bypass line away from the add-on control device to the atmosphere when the coating operation is running. You must inspect the automatic shutdown system at least once every month to verify that it will detect diversions of flow and shut down the coating operation.

(v) *Flow direction indicator.* Install, calibrate, maintain, and operate according to the manufacturer's specifications a flow direction indicator that takes a reading at least once every 15 minutes and provides a record indicating whether the emissions are directed to the add-on control device or diverted from the add-on control device. Each time the flow direction changes, the next reading of the time of occurrence and flow direction must be recorded. The flow direction indicator must be installed in each bypass line or air makeup supply line that could divert the emissions away from the add-on control device to the atmosphere.

(2) If any bypass line is opened, you must include a description of why the

sfrattini on LAPJZKW1R2 with $$_JOB
VerDate Sep<11>2014 09:16 Apr 04, 2023 Jkt 256165 PO 00000 Frm 00788 Fmt 8010 Sfmt 8010 Q:\40\256165.XXX PC31

bypass line was opened and the length of time it remained open in the semi-annual compliance reports required in § 63.3920.

(c) *Thermal oxidizers and catalytic oxidizers.* If you are using a thermal oxidizer or catalytic oxidizer as an add-on control device (including those used with concentrators or with carbon adsorbers to treat desorbed concentrate streams), you must comply with the requirements in paragraphs (c)(1) through (3) of this section:

(1) For a thermal oxidizer, install a gas temperature monitor in the firebox of the thermal oxidizer or in the duct immediately downstream of the firebox before any substantial heat exchange occurs.

(2) For a catalytic oxidizer, install gas temperature monitors upstream and/or downstream of the catalyst bed as required in § 63.3967(b).

(3) For all thermal oxidizers and catalytic oxidizers, you must meet the requirements in paragraphs (a) and (c)(3)(i) through (v) of this section for each gas temperature monitoring device. For the purposes of this paragraph (c)(3), a thermocouple is part of the temperature sensor.

(i) Locate the temperature sensor in a position that provides a representative temperature.

(ii) Use a temperature sensor with a measurement sensitivity of 5 degrees Fahrenheit or 1.0 percent of the temperature value, whichever is larger.

(iii) Before using the sensor for the first time or when relocating or replacing the sensor, perform a validation check by comparing the sensor output to a calibrated temperature measurement device or by comparing the sensor output to a simulated temperature.

(iv) Conduct an accuracy audit every quarter and after every deviation. Accuracy audit methods include comparisons of sensor output to redundant temperature sensors, to calibrated temperature measurement devices, or to temperature simulation devices.

(v) Conduct a visual inspection of each sensor every quarter if redundant temperature sensors are not used.

(d) *Regenerative carbon adsorbers.* If you are using a regenerative carbon adsorber as an add-on control device, you must monitor the total regeneration desorbing gas (*e.g.*, steam or nitrogen) mass flow for each regeneration cycle, the carbon bed temperature after each regeneration and cooling cycle, and comply with paragraphs (a)(3) through (5) and (d)(1) through (3) of this section.

(1) The regeneration desorbing gas mass flow monitor must be an integrating device having a measurement sensitivity of plus or minus 10 percent capable of recording the total regeneration desorbing gas mass flow for each regeneration cycle.

(2) The carbon bed temperature monitor must be capable of recording the temperature within 15 minutes of completing any carbon bed cooling cycle.

(3) For all regenerative carbon adsorbers, you must meet the requirements in paragraphs (c)(3)(i) through (v) of this section for each temperature monitoring device.

(e) *Condensers.* If you are using a condenser, you must monitor the condenser outlet (product side) gas temperature and comply with paragraphs (a) and (e)(1) and (2) of this section.

(1) The temperature monitor must provide a gas temperature record at least once every 15 minutes.

(2) For all condensers, you must meet the requirements in paragraphs (c)(3)(i) through (v) of this section for each temperature monitoring device.

(f) *Concentrators.* If you are using a concentrator, such as a zeolite wheel or rotary carbon bed concentrator, you must comply with the requirements in paragraphs (f)(1) and (2) of this section.

(1) You must install a temperature monitor in the desorption gas stream. The temperature monitor must meet the requirements in paragraphs (a) and (c)(3) of this section.

(2) You must install a device to monitor pressure drop across the zeolite wheel or rotary carbon bed. The pressure monitoring device must meet the requirements in paragraphs (a) and (g)(2) of this section.

(g) *Emission capture systems.* The capture system monitoring system must comply with the applicable requirements in paragraphs (g)(1) and (2) of this section. If the source is a magnet wire coating machine, you may use the procedures in section 2.0 of appendix A to this subpart as an alternative.

sfrattini on LAPJZKW1R2 with $$_JOB
VerDate Sep<11>2014 09:16 Apr 04, 2023 Jkt 256165 PO 00000 Frm 00789 Fmt 8010 Sfmt 8010 Q:\40\256165.XXX PC31

(1) For each flow measurement device, you must meet the requirements in paragraphs (a) and (g)(1)(i) through (vii) of this section.

(i) Locate a flow sensor in a position that provides a representative flow measurement in the duct from each capture device in the emission capture system to the add-on control device.

(ii) Use a flow sensor with an accuracy of at least 10 percent of the flow.

(iii) Perform an initial sensor calibration in accordance with the manufacturer's requirements.

(iv) Perform a validation check before initial use or upon relocation or replacement of a sensor. Validation checks include comparison of sensor values with electronic signal simulations or via relative accuracy testing.

(v) Conduct an accuracy audit every quarter and after every deviation. Accuracy audit methods include comparisons of sensor values with electronic signal simulations or via relative accuracy testing.

(vi) Perform leak checks monthly.

(vii) Perform visual inspections of the sensor system quarterly if there is no redundant sensor.

(2) For each pressure drop measurement device, you must comply with the requirements in paragraphs (a) and (g)(2)(i) through (vii) of this section.

(i) Locate the pressure sensor(s) in or as close to a position that provides a representative measurement of the pressure drop across each opening you are monitoring.

(ii) Use a pressure sensor with an accuracy of at least 0.5 inches of water column or 5 percent of the measured value, whichever is larger.

(iii) Perform an initial calibration of the sensor according to the manufacturer's requirements.

(iv) Conduct a validation check before initial operation or upon relocation or replacement of a sensor. Validation checks include comparison of sensor values to calibrated pressure measurement devices or to pressure simulation using calibrated pressure sources.

(v) Conduct accuracy audits every quarter and after every deviation. Accuracy audits include comparison of sensor values to calibrated pressure measurement devices or to pressure simulation using calibrated pressure sources.

(vi) Perform monthly leak checks on pressure connections. A pressure of at least 1.0 inches of water column to the connection must yield a stable sensor result for at least 15 seconds.

(vii) Perform a visual inspection of the sensor at least monthly if there is no redundant sensor.

[69 FR 157, Jan. 2, 2004, as amended at 85 FR 41144, July 8, 2020]

OTHER REQUIREMENTS AND INFORMATION

§ 63.3980 Who implements and enforces this subpart?

(a) This subpart can be implemented and enforced by us, the U.S. Environmental Protection Agency (EPA), or a delegated authority such as your State, local, or tribal agency. If the Administrator has delegated authority to your State, local, or tribal agency, then that agency (as well as the EPA) has the authority to implement and enforce this subpart. You should contact your EPA Regional Office to find out if implementation and enforcement of this subpart is delegated to your State, local, or tribal agency.

(b) In delegating implementation and enforcement authority of this subpart to a State, local, or tribal agency under subpart E of this part, the authorities contained in paragraph (c) of this section are retained by the Administrator and are not transferred to the State, local, or tribal agency.

(c) The authorities that will not be delegated to State, local, or tribal agencies are listed in paragraphs (c)(1) through (4) of this section:

(1) Approval of alternatives to the requirements in §§ 63.3881 through 3883 and 63.3890 through 3893.

(2) Approval of major alternatives to test methods under § 63.7(e)(2)(ii) and (f) and as defined in § 63.90.

(3) Approval of major alternatives to monitoring under § 63.8(f) and as defined in § 63.90.

(4) Approval of major alternatives to recordkeeping and reporting under § 63.10(f) and as defined in § 63.90.

sfrattini on LAPJZKW1R2 with $$_JOB
VerDate Sep<11>2014 09:16 Apr 04, 2023 Jkt 256165 PO 00000 Frm 00790 Fmt 8010 Sfmt 8010 Q:\40\256165.XXX PC31

§ 63.3981 What definitions apply to this subpart?

Terms used in this subpart are defined in the CAA, in 40 CFR 63.2, and in this section as follows:

Additive means a material that is added to a coating after purchase from a supplier (*e.g.*, catalysts, activators, accelerators).

Add-on control means an air pollution control device, such as a thermal oxidizer or carbon adsorber, that reduces pollution in an air stream by destruction or removal before discharge to the atmosphere.

Adhesive, *adhesive coating* means any chemical substance that is applied for the purpose of bonding two surfaces together. Products used on humans and animals, adhesive tape, contact paper, or any other product with an adhesive incorporated onto or in an inert substrate shall not be considered adhesives under this subpart.

Assembled on-road vehicle coating means any coating operation in which coating is applied to the surface of some component or surface of a fully assembled motor vehicle or trailer intended for on-road use including, but not limited to, components or surfaces on automobiles and light-duty trucks that have been repaired after a collision or otherwise repainted, fleet delivery trucks, and motor homes and other recreational vehicles (including camping trailers and fifth wheels). Assembled on-road vehicle coating includes the concurrent coating of parts of the assembled on-road vehicle that are painted off-vehicle to protect systems, equipment, or to allow full coverage. Assembled on-road vehicle coating does not include surface coating operations that meet the applicability criteria of the automobiles and light-duty trucks NESHAP. Assembled on-road vehicle coating also does not include the use of adhesives, sealants, and caulks used in assembling on-road vehicles.

Capture device means a hood, enclosure, room, floor sweep, or other means of containing or collecting emissions and directing those emissions into an add-on air pollution control device.

Capture efficiency or capture system efficiency means the portion (expressed as a percentage) of the pollutants from an emission source that is delivered to an add-on control device.

Capture system means one or more capture devices intended to collect emissions generated by a coating operation in the use of coatings or cleaning materials, both at the point of application and at subsequent points where emissions from the coatings and cleaning materials occur, such as flashoff, drying, or curing. As used in this subpart, multiple capture devices that collect emissions generated by a coating operation are considered a single capture system.

Cleaning material means a solvent used to remove contaminants and other materials, such as dirt, grease, oil, and dried or wet coating (*e.g.*, depainting or paint stripping), from a substrate before or after coating application or from equipment associated with a coating operation, such as spray booths, spray guns, racks, tanks, and hangers. Thus, it includes any cleaning material used on substrates or equipment or both.

Coating means a material applied to a substrate for decorative, protective, or functional purposes. Such materials include, but are not limited to, paints, sealants, liquid plastic coatings, caulks, inks, adhesives, and maskants. Decorative, protective, or functional materials that consist only of protective oils for metal, acids, bases, or any combination of these substances, or paper film or plastic film which may be pre-coated with an adhesive by the film manufacturer, are not considered coatings for the purposes of this subpart. A liquid plastic coating means a coating made from fine particle-size polyvinyl chloride (PVC) in solution (also referred to as a plastisol).

Coating operation means equipment used to apply cleaning materials to a substrate to prepare it for coating application (surface preparation) or to remove dried coating; to apply coating to a substrate (coating application) and to dry or cure the coating after application; or to clean coating operation equipment (equipment cleaning). A single coating operation may include any combination of these types of equipment, but always includes at least the point at which a given quantity of coating or cleaning material is applied

sfrattini on LAPJZKW1R2 with $$_JOB
VerDate Sep<11>2014 09:16 Apr 04, 2023 Jkt 256165 PO 00000 Frm 00791 Fmt 8010 Sfmt 8010 Q:\40\256165.XXX PC31

to a given part and all subsequent points in the affected source where organic HAP are emitted from the specific quantity of coating or cleaning material on the specific part. There may be multiple coating operations in an affected source. Coating application with handheld, non-refillable aerosol containers, touch-up markers, or marking pens is not a coating operation for the purposes of this subpart.

Coatings solids means the nonvolatile portion of the coating that makes up the dry film.

Continuous parameter monitoring system (CPMS) means the total equipment that may be required to meet the data acquisition and availability requirements of this subpart, used to sample, condition (if applicable), analyze, and provide a record of coating operation, or capture system, or add-on control device parameters.

Controlled coating operation means a coating operation from which some or all of the organic HAP emissions are routed through an emission capture system and add-on control device.

Deviation means:

(1) Before January 5, 2021, any instance in which an affected source subject to this subpart, or an owner or operator of such a source:

(i) Fails to meet any requirement or obligation established by this subpart including but not limited to, any emission limit or operating limit or work practice standard;

(ii) Fails to meet any term or condition that is adopted to implement an applicable requirement in this subpart and that is included in the operating permit for any affected source required to obtain such a permit; or

(iii) Fails to meet any emission limit, or operating limit, or work practice standard in this subpart during SSM, regardless of whether or not such failure is permitted by this subpart; and

(2) On and after January 5, 2021, any instance in which an affected source subject to this subpart or an owner or operator of such a source:

(i) Fails to meet any requirement or obligation established by this subpart including but not limited to any emission limit, operating limit, or work practice standard; or

(ii) Fails to meet any term or condition that is adopted to implement an applicable requirement in this subpart and that is included in the operating permit for any affected source required to obtain such a permit.

Emission limitation means the aggregate of all requirements associated with a compliance option including emission limit, operating limit, work practice standard, etc.

Enclosure means a structure that surrounds a source of emissions and captures and directs the emissions to an add-on control device.

Exempt compound means a specific compound that is not considered a VOC due to negligible photochemical reactivity. The exempt compounds are listed in 40 CFR 51.100(s).

Extreme performance fluoropolymer coating means coatings that are formulated systems based on fluoropolymer resins which often contain bonding matrix polymers dissolved in non-aqueous solvents as well as other ingredients. Extreme performance fluoropolymer coatings are typically used when one or more critical performance criteria are required including, but not limited to a nonstick low-energy surface, dry film lubrication, high resistance to chemical attack, extremely wide operating temperature, high electrical insulating properties, or that the surface comply with government (*e.g.*, USDA, FDA) or third party specifications for health, safety, reliability, or performance. Once applied to a substrate, extreme performance fluoropolymer coatings undergo a curing process that typically requires high temperatures, a chemical reaction, or other specialized technology.

Facility maintenance means the routine repair or renovation (including the surface coating) of the tools, equipment, machinery, and structures that comprise the infrastructure of the affected facility and that are necessary for the facility to function in its intended capacity.

General use coating means any material that meets the definition of coating but does not meet the definition of high performance coating, rubber-to-metal coating, magnet wire coating, or extreme performance fluoropolymer coating as defined in this section.

sfrattini on LAPJZKW1R2 with $$_JOB
VerDate Sep<11>2014 09:16 Apr 04, 2023 Jkt 256165 PO 00000 Frm 00792 Fmt 8010 Sfmt 8010 Q:\40\256165.XXX PC31

High performance architectural coating means any coating applied to architectural subsections which is required to meet the specifications of Architectural Aluminum Manufacturer's Association's publication number AAMA 605.2–2000.

High performance coating means any coating that meets the definition of high performance architectural coating or high temperature coating in this section.

High temperature coating means any coating applied to a substrate which during normal use must withstand temperatures of at least 538 degrees Celsius (1000 degrees Fahrenheit).

Hobby shop means any surface coating operation, located at an affected source, that is used exclusively for personal, noncommercial purposes by the affected source's employees or assigned personnel.

Magnet wire coatings, commonly referred to as magnet wire enamels, are applied to a continuous strand of wire which will be used to make turns (windings) in electrical devices such as coils, transformers, or motors. Magnet wire coatings provide high dielectric strength and turn-to-turn conductor insulation. This allows the turns of an electrical device to be placed in close proximity to one another which leads to increased coil effectiveness and electrical efficiency.

Magnet wire coating machine means equipment which applies and cures magnet wire coatings.

Manufacturer's formulation data means data on a material (such as a coating) that are supplied by the material manufacturer based on knowledge of the ingredients used to manufacture that material, rather than based on testing of the material with the test methods specified in §63.3941. Manufacturer's formulation data may include, but are not limited to, information on density, organic HAP content, volatile organic matter content, and coating solids content.

Mass fraction of organic HAP means the ratio of the mass of organic HAP to the mass of a material in which it is contained, expressed as kg of organic HAP per kg of material.

Month means a calendar month or a pre-specified period of 28 days to 35 days to allow for flexibility in recordkeeping when data are based on a business accounting period.

Non-HAP coating means, for the purposes of this subpart, a coating that contains no more than 0.1 percent by mass of any individual organic HAP that is listed in Table 5 to this subpart and no more than 1.0 percent by mass for any other individual HAP.

Organic HAP content means the mass of organic HAP emitted per volume of coating solids used for a coating calculated using Equation 2 of §63.3941. The organic HAP content is determined for the coating in the condition it is in when received from its manufacturer or supplier and does not account for any alteration after receipt. For reactive adhesives in which some of the HAP react to form solids and are not emitted to the atmosphere, organic HAP content is the mass of organic HAP that is emitted, rather than the organic HAP content of the coating as it is received.

Permanent total enclosure (PTE) means a permanently installed enclosure that meets the criteria of Method 204 of appendix M, 40 CFR part 51, for a PTE and that directs all the exhaust gases from the enclosure to an add-on control device.

Personal watercraft means a vessel (boat) which uses an inboard motor powering a water jet pump as its primary source of motive power and which is designed to be operated by a person or persons sitting, standing, or kneeling on the vessel, rather than in the conventional manner of sitting or standing inside the vessel.

Protective oil means an organic material that is applied to metal for the purpose of providing lubrication or protection from corrosion without forming a solid film. This definition of protective oil includes, but is not limited to, lubricating oils, evaporative oils (including those that evaporate completely), and extrusion oils. Protective oils used on miscellaneous metal parts and products include magnet wire lubricants and soft temporary protective coatings that are removed prior to installation or further assembly of a part or component.

Reactive adhesive means adhesive systems composed, in part, of volatile

sfrattini on LAPJZKW1R2 with $$_JOB
VerDate Sep<11>2014 09:16 Apr 04, 2023 Jkt 256165 PO 00000 Frm 00793 Fmt 8010 Sfmt 8010 Q:\40\256165.XXX PC31

monomers that react during the adhesive curing reaction, and, as a result, do not evolve from the film during use. These volatile components instead become integral parts of the adhesive through chemical reaction. At least 70 percent of the liquid components of the system, excluding water, react during the process.

Research or laboratory facility means a facility whose primary purpose is for research and development of new processes and products, that is conducted under the close supervision of technically trained personnel, and is not engaged in the manufacture of final or intermediate products for commercial purposes, except in a *de minimis* manner.

Responsible official means responsible official as defined in 40 CFR 70.2.

Rubber-to-metal coatings are coatings that contain heat-activated polymer systems in either solvent or water that, when applied to metal substrates, dry to a non-tacky surface and react chemically with the rubber and metal during a vulcanization process.

Startup, initial means the first time equipment is brought online in a facility.

Surface preparation means use of a cleaning material on a portion of or all of a substrate. This includes use of a cleaning material to remove dried coating, which is sometimes called depainting.

Temporary total enclosure means an enclosure constructed for the purpose of measuring the capture efficiency of pollutants emitted from a given source as defined in Method 204 of appendix M, 40 CFR part 51.

Thinner means an organic solvent that is added to a coating after the coating is received from the supplier.

Total volatile hydrocarbon (TVH) means the total amount of nonaqueous volatile organic matter determined according to Methods 204 and 204A through 204F of appendix M to 40 CFR part 51 and substituting the term TVH each place in the methods where the term VOC is used. The TVH includes both VOC and non-VOC.

Uncontrolled coating operation means a coating operation from which none of the organic HAP emissions are routed through an emission capture system and add-on control device.

Volatile organic compound (VOC) means any compound defined as VOC in 40 CFR 51.100(s).

Volume fraction of coating solids means the ratio of the volume of coating solids (also known as the volume of nonvolatiles) to the volume of a coating in which it is contained; liters (gal) of coating solids per liter (gal) of coating.

Wastewater means water that is generated in a coating operation and is collected, stored, or treated prior to being discarded or discharged.

[69 FR 157, Jan. 2, 2004, as amended at 85 FR 41144, July 8, 2020]

TABLE 1 TO SUBPART MMMM OF PART 63—OPERATING LIMITS IF USING THE EMISSION RATE WITH ADD-ON CONTROLS OPTION

If you are required to comply with operating limits by §63.3892(c), you must comply with the applicable operating limits in the following table:

For the following device . . .	You must meet the following operating limit . . .	And you must demonstrate continuous compliance with the operating limit by . . .
1. Thermal oxidizer	a. The average combustion temperature in any 3-hour period must not fall below the combustion temperature limit established according to §63.3967(a).	i. Collecting the combustion temperature data according to §63.3968(c); ii. Reducing the data to 3-hour block averages; and iii. Maintaining the 3-hour average combustion temperature at or above the temperature limit.
2. Catalytic oxidizer	a. The average temperature measured just before the catalyst bed in any 3-hour period must not fall below the limit established according to §63.3967(b) (for magnet wire coating machines, temperature can be monitored before or after the catalyst bed); and either	i. Collecting the temperature data according to §63.3968(c); ii. Reducing the data to 3-hour block averages; and iii. Maintaining the 3-hour average temperature before (or for magnet wire coating machines after) the catalyst bed at or above the temperature limit.

sfrattini on LAPJZKW1R2 with $$_JOB
VerDate Sep<11>2014 09:16 Apr 04, 2023 Jkt 256165 PO 00000 Frm 00794 Fmt 8010 Sfmt 8002 Q:\40\256165.XXX PC31

For the following device . . .	You must meet the following operating limit . . .	And you must demonstrate continuous compliance with the operating limit by . . .
	b. Ensure that the average temperature difference across the catalyst bed in any 3-hour period does not fall below the temperature difference limit established according to § 63.3967(b) (2); or	i. Collecting the temperature data according to § 63.3968(c); ii. Reducing the data to 3-hour block averages; and iii. Maintaining the 3-hour average temperature difference at or above the temperature difference limit.
	c. Develop and implement an inspection and maintenance plan according to § 63.3967(b)(4) or for magnet wire coating machines according to section 3.0 of appendix A to this subpart.	i. Maintaining and up-to-date inspection and maintenance plan, records of annual catalyst activity checks, records of monthly inspections of the oxidizer system, and records of the annual internal inspections of the catalyst bed. If a problem is discovered during a monthly or annual inspection required by § 63.3967(b)(4) or for magnet wire coating machines by section 3.0 of appendix A to this subpart, you must take corrective action as soon as practicable consistent with the manufacturer's recommendations.
3. Regenerative carbon adsorber.	a. The total regeneration desorbing gas (*e.g.,* steam or nitrogen) mass flow for each carbon bed regeneration cycle must not fall below the total regeneration desorbing gas mass flow limit established according to § 63.3967(c); and	i. Measuring the total regeneration desorbing gas (*e.g.,* steam or nitrogen) mass flow for each regeneration cycle according to § 63.3968(d); and ii. Maintaining the total regeneration desorbing gas mass flow at or above the mass flow limit.
	b. The temperature of the carbon bed, after completing each regeneration and any cooling cycle, must not exceed the carbon bed temperature limit established according to § 63.3967(c).	i. Measuring the temperature of the carbon bed after completing each regeneration and any cooling cycle according to § 63.3968(d); and ii. Operating the carbon beds such that each carbon bed is not returned to service until completing each regeneration and any cooling cycle until the recorded temperature of the carbon bed is at or below the temperature limit.
4. Condenser	a. The average condenser outlet (product side) gas temperature in any 3-hour period must not exceed the temperature limit established according to § 63.3967(d).	i. Collecting the condenser outlet (product side) gas temperature according to § 63.3968(e); ii. Reducing the data to 3-hour block averages; and iii. Maintaining the 3-hour average gas temperature at the outlet at or below the temperature limit.
5. Concentrators, including zeolite wheels and rotary carbon adsorbers.	a. The average gas temperature of the desorption concentrate stream in any 3-hour period must not fall below the limit established according to § 63.3967(e); and	i. Collecting the temperature data according to 63.3968(f); ii. Reducing the data to 3-hour block averages; and iii. Maintaining the 3-hour average temperature at or above the temperature limit.
	b. The average pressure drop of the dilute stream across the concentrator in any 3-hour period must not fall below the limit established according to § 63.3967(e).	i. Collecting the pressure drop data according to 63.3968(f); ii. Reducing the pressure drop data to 3-hour block averages; and iii. Maintaining the 3-hour average pressure drop at or above the pressure drop limit.
6. Emission capture system that is a PTE according to § 63.3965(a).	a. The direction of the air flow at all times must be into the enclosure; and either	i. Collecting the direction of air flow, and either the facial velocity of air through all natural draft openings according to § 63.3968(b)(1) or the pressure drop across the enclosure according to § 63.3968(g)(2); and ii. Maintaining the facial velocity of air flow through all natural draft openings or the pressure drop at or above the facial velocity limit or pressure drop limit, and maintaining the direction of air flow into the enclosure at all times.
	b. The average facial velocity of air through all natural draft openings in the enclosure must be at least 200 feet per minutes; or	i. See items 6.a.i and 6.a.ii.
	c. The pressure drop across the enclosure must be at least 0.007 inch H_2O, as established in Method 204 of appendix M to 40 CFR part 51.	i. See items 6.a.i and 6.a.ii.

sfrattini on LAPJZKW1R2 with $$_JOB
VerDate Sep<11>2014 09:16 Apr 04, 2023 Jkt 256165 PO 00000 Frm 00795 Fmt 8010 Sfmt 8002 Q:\40\256165.XXX PC31

For the following device . . .	You must meet the following operating limit . . .	And you must demonstrate continuous compliance with the operating limit by . . .
7. Emission capture system that is not a PTE according to § 63.3965(a).	a. The average gas volumetric flow rate or duct static pressure in each duct between a capture device and add-on control device inlet in any 3-hour period must not fall below the average volumetric flow rate or duct static pressure limit established for that capture device according to § 63.3967(f).	i. Collecting the gas volumetric flow rate or duct static pressure for each capture device according to § 63.3968(g); ii. Reducing the data to 3-hour block averages; and iii. Maintaining the 3-hour average gas volumetric flow rate or duct static pressure for each capture device at or above the gas volumetric flow rate or duct static pressure limited.

TABLE 2 TO SUBPART MMMM OF PART 63—APPLICABILITY OF GENERAL PROVISIONS TO SUBPART MMMM OF PART 63

You must comply with the applicable General Provisions requirements according to the following table:

Citation	Subject	Applicable to subpart MMMM	Explanation
§ 63.1(a)(1)–(14)	General Applicability	Yes.	
§ 63.1(b)(1)–(3)	Initial Applicability Determination	Yes	Applicability to subpart MMMM is also specified in § 63.3881.
§ 63.1(c)(1)	Applicability After Standard Established.	Yes.	
§ 63.1(c)(2)–(3)	Applicability of Permit Program for Area Sources.	No	Area sources are not subject to subpart MMMM.
§ 63.1(c)(4)–(5)	Extensions and Notifications	Yes.	
§ 63.1(c)(6)	Reclassification	Yes.	
§ 63.1(e)	Applicability of Permit Program Before Relevant Standard is Set.	Yes.	
§ 63.2	Definitions	Yes	Additional definitions are specified in § 63.3981.
§ 63.1(a)–(c)	Units and Abbreviations	Yes.	
§ 63.4(a)(1)–(5)	Prohibited Activities	Yes.	
§ 63.4(b)–(c)	Circumvention/Severability	Yes.	
§ 63.5(a)	Construction/Reconstruction	Yes.	
§ 63.5(b)(1)–(6)	Requirements for Existing Newly Constructed, and Reconstructed Sources.	Yes.	
§ 63.5(d)	Application for Approval of Construction/Reconstruction.	Yes.	
§ 63.5(e)	Approval of Construction/Reconstruction.	Yes.	
§ 63.5(f)	Approval of Construction/Reconstruction Based on Prior State Review.	Yes.	
§ 63.6(a)	Compliance With Standards and Maintenance Requirements—Applicability.	Yes.	
§ 63.6(b)(1)–(7)	Compliance Dates for New and Reconstructed Sources.	Yes	Section 63.3883 specifies the compliance dates.
§ 63.6(c)(1)–(5)	Compliance Dates for Existing Sources.	Yes	Section 63.3883 specifies the compliance dates.
§ 63.6(e)(1)–(2)	Operation and Maintenance	Yes before January 5, 2021. No on and after January 5, 2021.	*See* § 63.3900(b) for general duty requirement.
§ 63.6(e)(3)	SSMP	Yes before January 5, 2021. No on and after January 5, 2021.	
§ 63.6(f)(1)	Compliance Except During SSM	Yes before January 5, 2021. No on and after January 5, 2021.	
§ 63.6(f)(2)–(3)	Methods for Determining Compliance..	Yes.	
§ 63.6(g)(1)–(3)	Use of an Alternative Standard ..	Yes.	

sfrattini on LAPJZKW1R2 with $$_JOB
VerDate Sep<11>2014 09:16 Apr 04, 2023 Jkt 256165 PO 00000 Frm 00796 Fmt 8010 Sfmt 8002 Q:\40\256165.XXX PC31

Citation	Subject	Applicable to subpart MMMM	Explanation
§ 63.6(h)	Compliance With Opacity/Visible Emission Standards.	No	Subpart MMMM does not establish opacity standards and does not require continuous opacity monitoring systems (COMS).
§ 63.6(i)(1)–(16)	Extension of Compliance	Yes.	
§ 63.6(j)	Presidential Compliance Exemption.	Yes.	
§ 63.7(a)(1)	Performance Test Requirements—Applicability.	Yes	Applies to all affected sources. Additional requirements for performance testing are specified in §§ 63.3964, 63.3965, and 63.3966.
§ 63.7(a)(2)	Performance Test Requirements—Dates.	Yes	Applies only to performance tests for capture system and control device efficiency at sources using these to comply with the standard. Section 63.3960specifies the schedule for performance test requirements that are earlier than those specified in § 63.7(a)(2).
§ 63.7(a)(3)–(4)	Performance Tests Required By the Administrator, Force Majeure.	Yes.	
§ 63.7(b)–(d)	Performance Test Requirements—Notification, Quality Assurance, Facilities Necessary for Safe Testing, Conditions During Test.	Yes	Applies only to performance tests for capture system and add-on control device efficiency at sources using these to comply with the standard.
§ 63.7(e)(1)	Conduct of Performance Tests	Yes before January 5, 2021. No on and after January 5, 2021.	*See* §§ 63.3964.
§ 63.7(e)(2)–(4)	Conduct of Performance Tests	Yes.	
§ 63.7(f)	Performance Test Requirements—Use of Alternative Test Method.	Yes	Applies to all test methods except those used to determine capture system efficiency.
§ 63.7(g)–(h)	Performance Test Requirements—Data Analysis, Recordkeeping, Reporting, Waiver of Test.	Yes	Applies only to performance tests for capture system and add-on control device efficiency at sources using these to comply with the standard.
§ 63.8(a)(1)–(3)	Monitoring Requirements—Applicability.	Yes	Applies only to monitoring of capture system and add-on control device efficiency at sources using these to comply with the standard. Additional requirements for monitoring are specified in § 63.3968.
§ 63.8(a)(4)	Additional Monitoring Requirements.	No	Subpart MMMM does not have monitoring requirements for flares.
§ 63.8(b)	Conduct of Monitoring	Yes.	
§ 63.8(c)(1)	Continuous Monitoring System (CMS) Operation and Maintenance.	Yes before January 5, 2021. No on and after January 5, 2021.	Section 63.3968 specifies the requirements for the operation of CMS for capture systems and add-on control devices at sources using these to comply.
§ 63.8(c)(2)–(3)	CMS Operation and Maintenance.	Yes	Applies only to monitoring of capture system and add-on control device efficiency at sources using these to comply with the standard. Additional requirements for CMS operations and maintenance are specified in § 63.3968.

sfrattini on LAPJZKW1R2 with $$_JOB
VerDate Sep<11>2014 09:16 Apr 04, 2023 Jkt 256165 PO 00000 Frm 00797 Fmt 8010 Sfmt 8002 Q:\40\256165.XXX PC31

Citation	Subject	Applicable to subpart MMMM	Explanation
§ 63.8(c)(4)	CMS	No	§ 63.3968 specifies the requirements for the operation of CMS for capture systems and add-on control devices at sources using these to comply.
§ 63.8(c)(5)	COMS	No	Subpart MMMM does not have opacity or visible emission standards.
§ 63.8(c)(6)	CMS Requirements	No	Section 63.3968 specifies the requirements for monitoring systems for capture systems and add-on control devices at sources using these to comply.
§ 63.8(c)(7)	CMS Out-of-Control Periods	Yes.	
§ 63.8(c)(8)	CMS Out-of-Control Periods and Reporting.	No	§ 63.3920 requires reporting of CMS out-of-control periods.
§ 63.8(d)–(e)	Quality Control Program and CMS Performance Evaluation.	No	Subpart MMMM does not require the use of continuous emissions monitoring systems.
§ 63.8(f)(1)–(5)	Use of an Alternative Monitoring Method.	Yes.	
§ 63.8(f)(6)	Alternative to Relative Accuracy Test.	No	Subpart MMMM does not require the use of continuous emissions monitoring systems.
§ 63.8(g)(1)–(5)	Data Reduction	No	Sections 63.3967 and 63.3968 specify monitoring data reduction.
§ 63.9(a)–(d)	Notification Requirements	Yes.	
§ 63.9(e)	Notification of Performance Test	Yes	Applies only to capture system and add-on control device performance tests at sources using these to comply with the standard.
§ 63.9(f)	Notification of Visible Emissions/Opacity Test.	No	Subpart MMMM does not have opacity or visible emissions standards.
§ 63.9(g)(1)–(3)	Additional Notifications When Using CMS.	No	Subpart MMMM does not require the use of continuous emissions monitoring systems.
§ 63.9(h)	Notification of Compliance Status.	Yes	Section 63.3910 specifies the dates for submitting the notification of compliance status.
§ 63.9(i)	Adjustment of Submittal Deadlines.	Yes.	
§ 63.9(j)	Change in Previous Information	Yes.	
§ 63.9(k)	Electronic reporting procedures	Yes	Only as specified in § 63.9(j).
§ 63.10(a)	Recordkeeping/Reporting—Applicability and General Information.	Yes.	
§ 63.10(b)(1)	General Recordkeeping Requirements.	Yes	Additional requirements are specified in §§ 63.3930 and 63.3931.
§ 63.10(b)(2)(i)–(ii)	Recordkeeping of Occurrence and Duration of Startups and Shutdowns and of Failures to Meet Standards.	Yes before January 5, 2021. No on and after January 5, 2021.	*See* § 63.3930(j).
§ 63.10(b)(2)(iii)	Recordkeeping Relevant to Maintenance of Air Pollution Control and Monitoring Equipment.	Yes	§ 63.10(b)(2)(iii).
§ 63.10(b)(2)(iv)–(v)	Actions Taken to Minimize Emissions During SSM.	Yes before January 5, 2021. No on and after January 5, 2021.	*See* § 63.3930(j) for a record of actions taken to minimize emissions duration a deviation from the standard.
§ 63.10(b)(2)(vi)	Recordkeeping for CMS Malfunctions.	Yes before January 5, 2021. No on and after January 5, 2021.	*See* § 63.3930(j) for records of periods of deviation from the standard, including instances where a CMS is inoperative or out-of-control.
§ 63.10(b)(2)(xii)	Records	Yes.	

sfrattini on LAPJZKW1R2 with $$_JOB
VerDate Sep<11>2014 09:16 Apr 04, 2023 Jkt 256165 PO 00000 Frm 00798 Fmt 8010 Sfmt 8002 Q:\40\256165.XXX PC31

Citation	Subject	Applicable to subpart MMMM	Explanation
§ 63.10(b)(2)(xiii)		No	Subpart MMMM does not require the use of continuous emissions monitoring systems.
§ 63.10(b)(2)(xiv)		Yes.	
§ 63.10(b)(3)	Recordkeeping Requirements for Applicability Determinations.	Yes.	
§ 63.10(c)(1)–(6)	Additional Recordkeeping Requirements for Sources with CMS.	Yes.	
§ 63.10(c)(7)–(8)	Additional Recordkeeping Requirements for Sources with CMS.	No	*See* § 63.3930(j) for records of periods of deviation from the standard, including instances where a CMS is inoperative or out-of-control.
§ 63.10(c)(10)–(14)	Additional Recordkeeping Requirements for Sources with CMS.	Yes.	
§ 63.10(c)(15)	Records Regarding the SSMP	Yes before January 5, 2021. No on and after January 5, 2021.	
§ 63.10(d)(1)	General Reporting Requirements.	Yes	Additional requirements are specified in § 63.3920.
§ 63.10(d)(2)	Report of Performance Test Results.	Yes	Additional requirements are specified in § 63.3920(b) and (d).
§ 63.10(d)(3)	Reporting Opacity or Visible Emissions Observations.	No	Subpart MMMM does not require opacity or visible emissions observations.
§ 63.10(d)(4)	Progress Reports for Sources With Compliance Extensions.	Yes.	
§ 63.10(d)(5)	SSM Reports	Yes before January 5, 2021. No on and after January 5, 2021.	*See* § 63.3920 (a)(7) and (c).
§ 63.10(e)(1)–(2)	Additional CMS Reports	No	Subpart MMMM does not require the use of continuous emissions monitoring systems.
§ 63.10(e)(3)	Excess Emissions/CMS Performance Reports.	No	Section 63.3920(b) specifies the contents of periodic compliance reports.
§ 63.10(e)(4)	COMS Data Reports	No	Subpart MMMMM does not specify requirements for opacity or COMS.
§ 63.10(f)	Recordkeeping/Reporting Waiver.	Yes.	
§ 63.11	Control Device Requirements/Flares.	No	Subpart MMMM does not specify use of flares for compliance.
§ 63.12	State Authority and Delegations	Yes.	
§ 63.13	Addresses	Yes.	
§ 63.14	IBR	Yes.	
§ 63.15	Availability of Information/Confidentiality.	Yes.	

[85 FR 41145, July 8, 2020, as amended at 85 FR 73906, Nov. 19, 2020]

Table 3 to Subpart MMMM of Part 63—Default Organic HAP Mass Fraction for Solvents and Solvent Blends

You may use the mass fraction values in the following table for solvent blends for which you do not have test data or manufacturer's formulation data and which match either the solvent blend name or the chemical abstract series (CAS) number. If a solvent blend matches both the name and CAS number for an entry, that entry's organic HAP mass fraction must be used for that solvent blend. Otherwise, use the organic HAP mass fraction for the entry matching either the solvent blend name or CAS number, or use the organic HAP mass fraction from table 4 to this subpart if neither the name or CAS number match.

sfrattini on LAPJZKW1R2 with $$_JOB
VerDate Sep<11>2014 09:16 Apr 04, 2023 Jkt 256165 PO 00000 Frm 00799 Fmt 8010 Sfmt 8026 Q:\40\256165.XXX PC31

Solvent/solvent blend	CAS. No.	Average organic HAP mass fraction	Typical organic HAP, percent by mass
1. Toluene	108–88–3	1.0	Toluene.
2. Xylene(s)	1330–20–7	1.0	Xylenes, ethylbenzene.
3. Hexane	110–54–3	0.5	n-hexane.
4. n-Hexane	110–54–3	1.0	n-hexane.
5. Ethylbenzene	100–41–4	1.0	Ethylbenzene.
6. Aliphatic 140		0	None.
7. Aromatic 100		0.02	1% xylene, 1% cumene.
8. Aromatic 150		0.09	Naphthalene.
9. Aromatic naphtha	64742–95–6	0.02	1% xylene, 1% cumene.
10. Aromatic solvent	64742–94–5	0.1	Naphthalene.
11. Exempt mineral spirits	8032–32–4	0	None.
12. Ligroines (VM & P)	8032–32–4	0	None.
13. Lactol spirits	64742–89–6	0.15	Toluene.
14. Low aromatic white spirit	64742–82–1	0	None.
15. Mineral spirits	64742–88–7	0.01	Xylenes.
16. Hydrotreated naphtha	64742–48–9	0	None.
17. Hydrotreated light distillate	64742–47–8	0.001	Toluene.
18. Stoddard solvent	8052–41–3	0.01	Xylenes.
19. Super high-flash naphtha	64742–95–6	0.05	Xylenes.
20. Varsol® solvent	8052–49–3	0.01	0.5% xylenes, 0.5% ethylbenzene.
21. VM & P naphtha	64742–89–8	0.06	3% toluene, 3% xylene.
22. Petroleum distillate mixture	68477–31–6	0.08	4% naphthalene, 4% biphenyl.

Table 4 to Subpart MMMM of Part 63—Default Organic HAP Mass Fraction for Petroleum Solvent Groups [A]

You may use the mass fraction values in the following table for solvent blends for which you do not have test data or manufacturer's formulation data.

Solvent type	Average organic HAP mass fraction	Typical organic HAP, percent by mass
Aliphatic [b]	0.03	1% Xylene, 1% Toluene, and 1% Ethylbenzene.
Aromatic [c]	0.06	4% Xylene, 1% Toluene, and 1% Ethylbenzene.

[a] Use this table only if the solvent blend does not match any of the solvent blends in Table 3 to this subpart by either solvent blend name or CAS number and you only know whether the blend is aliphatic or aromatic.
[b] Mineral Spirits 135, Mineral Spirits 150 EC, Naphtha, Mixed Hydrocarbon, Aliphatic Hydrocarbon, Aliphatic Naphtha, Naphthol Spirits, Petroleum Spirits, Petroleum Oil, Petroleum Naphtha, Solvent Naphtha, Solvent Blend.
[c] Medium-flash Naphtha, High-flash Naphtha, Aromatic Naphtha, Light Aromatic Naphtha, Light Aromatic Hydrocarbons, Aromatic Hydrocarbons, Light Aromatic Solvent.

Table 5 to Subpart MMMM of Part 63—List of HAP That Must Be Counted Toward Total Organic HAP Content If Present at 0.1 Percent or More by Mass

Chemical Name	CAS No.
1,1,2,2-Tetrachloroethane	79–34–5
1,1,2-Trichloroethane	79–00–5
1,1-Dimethylhydrazine	57–14–7
1,2-Dibromo-3-chloropropane	96–12–8
1,2-Diphenylhydrazine	122–66–7
1,3-Butadiene	106–99–0
1,3-Dichloropropene	542–75–6
1,4-Dioxane	123–91–1
2,4,6-Trichlorophenol	88–06–2
2,4/2,6-Dinitrotoluene (mixture)	25321–14–6
2,4-Dinitrotoluene	121–14–2
2,4-Toluene diamine	95–80–7
2-Nitropropane	79–46–9
3,3′-Dichlorobenzidine	91–94–1
3,3′-Dimethoxybenzidine	119–90–4
3,3′-Dimethylbenzidine	119–93–7
4,4′-Methylene bis(2-chloroaniline)	101–14–4
Acetaldehyde	75–07–0
Acrylamide	79–06–1
Acrylonitrile	107–13–1
Allyl chloride	107–05–1

sfrattini on LAPJZKW1R2 with $$_JOB
VerDate Sep<11>2014 09:16 Apr 04, 2023 Jkt 256165 PO 00000 Frm 00800 Fmt 8010 Sfmt 8002 Q:\40\256165.XXX PC31

Chemical Name	CAS No.
alpha-Hexachlorocyclohexane (a-HCH)	319–84–6
Aniline	62–53–3
Benzene	71–43–2
Benzidine	92–87–5
Benzotrichloride	98–07–7
Benzyl chloride	100–44–7
beta-Hexachlorocyclohexane (b-HCH)	319–85–7
Bis(2-ethylhexyl)phthalate	117–81–7
Bis(chloromethyl)ether	542–88–1
Bromoform	75–25–2
Captan	133–06–2
Carbon tetrachloride	56–23–5
Chlordane	57–74–9
Chlorobenzilate	510–15–6
Chloroform	67–66–3
Chloroprene	126–99–8
Cresols (mixed)	1319–77–3
DDE	3547–04–4
Dichloroethyl ether	111–44–4
Dichlorvos	62–73–7
Epichlorohydrin	106–89–8
Ethyl acrylate	140–88–5
Ethylene dibromide	106–93–4
Ethylene dichloride	107–06–2
Ethylene oxide	75–21–8
Ethylene thiourea	96–45–7
Ethylidene dichloride (1,1-Dichloroethane)	75–34–3
Formaldehyde	50–00–0
Heptachlor	76–44–8
Hexachlorobenzene	118–74–1
Hexachlorobutadiene	87–68–3
Hexachloroethane	67–72–1
Hydrazine	302–01–2
Isophorone	78–59–1
Lindane (hexachlorocyclohexane, all isomers)	58–89–9
m-Cresol	108–39–4
Methylene chloride	75–09–2
Naphthalene	91–20–3
Nitrobenzene	98–95–3
Nitrosodimethylamine	62–75–9
o-Cresol	95–48–7
o-Toluidine	95–53–4
Parathion	56–38–2
p-Cresol	106–44–5
p-Dichlorobenzene	106–46–7
Pentachloronitrobenzene	82–68–8
Pentachlorophenol	87–86–5
Propoxur	114–26–1
Propylene dichloride	78–87–5
Propylene oxide	75–56–9
Quinoline	91–22–5
Tetrachloroethene	127–18–4
Toxaphene	8001–35–2
Trichloroethylene	79–01–6
Trifluralin	1582–09–8
Vinyl bromide	593–60–2
Vinyl chloride	75–01–4
Vinylidene chloride	75–35–4

[85 FR 41148, July 8, 2020]

Appendix A to Subpart MMMM of Part 63—Alternative Capture Efficiency and Destruction Efficiency Measurement and Monitoring Procedures for Magnet Wire Coating Operations

1.0 Introduction.

1.1 These alternative procedures for capture efficiency and destruction efficiency measurement and monitoring are intended principally for newer magnet wire coating machines where the control device is internal and integral to the oven so that it is difficult or infeasible to make gas measurements at the inlet to the control device.

1.2 In newer gas fired magnet wire ovens with thermal control (no catalyst), the burner tube serves as the control device (thermal

sfrattini on LAPJZKW1R2 with $$_JOB
VerDate Sep<11>2014 09:16 Apr 04, 2023 Jkt 256165 PO 00000 Frm 00801 Fmt 8010 Sfmt 8002 Q:\40\256165.XXX PC31

oxidizer) for the process. The combustion of solvents in the burner tube is the principal source of heat for the oven.

1.3 In newer magnet wire ovens with a catalyst there is either a burner tube (gas fired ovens) or a tube filled with electric heating elements (electric heated oven) before the catalyst. A large portion of the solvent is often oxidized before reaching the catalyst. The combustion of solvents in the tube and across the catalyst is the principal source of heat for the oven. The internal catalyst in these ovens cannot be accessed without disassembly of the oven. This disassembly includes removal of the oven insulation. Oven reassembly often requires the installation of new oven insulation.

1.4 Some older magnet wire ovens have external afterburners. A significant portion of the solvent is oxidized within these ovens as well.

1.5 The alternative procedure for destruction efficiency determines the organic carbon content of the volatiles entering the control device based on the quantity of coating used, the carbon content of the volatile portion of the coating and the efficiency of the capture system. The organic carbon content of the control device outlet (oven exhaust for ovens without an external afterburner) is determined using Method 25 or 25A.

1.6 When it is difficult or infeasible to make gas measurements at the inlet to the control device, measuring capture efficiency with a gas-to-gas protocol (see §63.3965(d)) which relies on direct measurement of the captured gas stream will also be difficult or infeasible. In these situations, capture efficiency measurement is more appropriately done with a procedure which does not rely on direct measurement of the captured gas stream.

1.7 Magnet wire ovens are relatively small compared to many other coating ovens. The exhaust rate from an oven is low and varies as the coating use rate and solvent loading rate change from job to job. The air balance in magnet wire ovens is critical to product quality. Magnet wire ovens must be operated under negative pressure to avoid smoke and odor in the workplace, and the exhaust rate must be sufficient to prevent over heating within the oven.

1.8 The liquid and gas measurements needed to determine capture efficiency and control device efficiency using these alternative procedures may be made simultaneously.

1.9 Magnet wire facilities may have many (*e.g.*, 20 to 70 or more) individual coating lines each with its own capture and control system. With approval, representative capture efficiency and control device efficiency testing of one magnet wire coating machine out of a group of identical or very similar magnet wire coating machines may be performed rather than testing every individual magnet wire coating machine. The operating parameters must be established for each tested magnet wire coating machine during each capture efficiency test and each control device efficiency test. The operating parameters established for each tested magnet wire coating machine also serve as the operating parameters for untested or very similar magnet wire coating machines represented by a tested magnet wire coating machine.

2.0 Capture Efficiency.

2.1 If the capture system is a permanent total enclosure as described in §63.3965(a), then its capture efficiency may be assumed to be 100 percent.

2.2 If the capture system is not a permanent total enclosure, then capture efficiency must be determined using the liquid-to-uncaptured-gas protocol using a temporary total enclosure or building enclosure in §63.3965(c), or an alternative capture efficiency protocol (see §63.3965(e)) which does not rely on direct measurement of the captured gas stream.

2.3 As an alternative to establishing and monitoring the capture efficiency operating parameters in §63.3967(f), the monitoring described in either section 2.4 or 2.5, and the monitoring described in sections 2.6 and 2.7 may be used for magnet wire coating machines.

2.4 Each magnet wire oven must be equipped with an interlock mechanism which will stop or prohibit the application of coating either when any exhaust fan for that oven is not operating or when the oven experiences an over limit temperature condition.

2.5 Each magnet wire oven must be equipped with an alarm which will be activated either when any oven exhaust fan is not operating or when the oven experiences an over limit temperature condition.

2.6 If the interlock in 2.4 or the alarm in 2.5 is monitoring for over limit temperature conditions, then the temperature(s) that will trigger the interlock or the alarm must be included in the start-up, shutdown and malfunction plan and the interlock or alarm must be set to be activated when the oven reaches that temperature.

2.7 Once every 6 months, each magnet wire oven must be checked using a smoke stick or equivalent approach to confirm that the oven is operating at negative pressure compared to the surrounding atmosphere.

3.0 Control Device Efficiency.

3.1 Determine the weight fraction carbon content of the volatile portion of each coating, thinner, additive, or cleaning material used during each test run using either the procedure in section 3.2 or 3.3.

3.2 Following the procedures in Method 204F, distill a sample of each coating, thinner, additive, or cleaning material used during each test run to separate the volatile

sfrattini on LAPJZKW1R2 with $$_JOB
VerDate Sep<11>2014 09:16 Apr 04, 2023 Jkt 256165 PO 00000 Frm 00802 Fmt 8010 Sfmt 8002 Q:\40\256165.XXX PC31

portion. Determine the weight fraction carbon content of each distillate using ASTM Method D5291–02, ''Standard Test Methods for Instrumental Determination of Carbon, Hydrogen, and Nitrogen in Petroleum Products and Lubricants'' (incorporated by reference, see §63.14).

3.3 Analyze each coating, thinner, additive or cleaning material used during each test run using Method 311. For each volatile compound detected in the gas chromatographic analysis of each coating, thinner, additive, or cleaning material calculate the weight fraction of that whole compound in the coating, thinner, additive, or cleaning material. For each volatile compound detected in the gas chromatographic analysis of each coating, thinner, additive, or cleaning material calculate the weight fraction of the carbon in that compound in the coating, thinner, additive, or cleaning material. Calculate the weight fraction carbon content of each coating, thinner, additive, or cleaning material as the ratio of the sum of the carbon weight fractions divided by the sum of the whole compound weight fractions.

3.4 Determine the mass fraction of total volatile hydrocarbon (TVH_i) in each coating, thinner, additive, or cleaning material, i, used during each test run using Method 24. The mass fraction of total volatile hydrocarbon equals the weight fraction volatile matter (W_v in Method 24) minus the weight fraction water (W_w in Method 24), if any, present in the coating. The ASTM Method D6053–00, ''Standard Test Method for Determination of Volatile Organic Compound (VOC) Content of Electrical Insulating Varnishes'' (incorporated by reference, see §63.14), may be used as an alternative to Method 24 for magnet wire enamels. The specimen size for testing magnet wire enamels with ASTM Method D6053–00 must be 2.0 ±0.1 grams.

3.5 Determine the volume (VOL_i) or mass ($MASS_i$) of each coating, thinner, additive, or cleaning material, i, used during each test run.

3.6 Calculate the total volatile hydrocarbon input ($TVHC_{inlet}$) to the control device during each test run, as carbon, using Equation 1:

$$TVHC_{inlet} = \sum_{i=1}^{n} (TVH_i \times VOL_i \times D_i \times CD_i) \qquad \text{(Eq. 1)}$$

where:

TVH_i = Mass fraction of TVH in coating, thinner, additive, or cleaning material, i, used in the coating operation during the test run.

VOL_i = Volume of coating, thinner, additive, or cleaning material, i, used in the coating operation during the test run, liters.

D_i = Density of coating, thinner, additive, or cleaning material, i, used in the coating operation during the test run, kg per liter.

CD_i = Weight fraction carbon content of the distillate from coating, thinner, additive, or cleaning material, i, used in the coating operation during the test run, percent.

n = Number of coating, thinner, additive, and cleaning materials used in the coating operation during the test run.

3.7 If the mass, $MASS_i$, of each coating, solvent, additive, or cleaning material, i, used during the test run is measured directly then $MASS_i$ can be substituted for $VOL_i \times D_i$ in Equation 1 in section 3.6.

3.8 Determine the TVHC output ($TVHC_{outlet}$) from the control device, as carbon, during each test run using the methods in §63.3966(a) and the procedure for determining M_{fo} in §63.3966(d). $TVHC_{outlet}$ equals M_{fo} times the length of the test run in hours.

3.9 Determine the control device efficiency (DRE) for each test run using Equation 2:

$$DRE = \frac{(TVHC_{inlet} - TVHC_{outlet})}{TVHC_{inlet}} \times 100 \qquad \text{(Eq. 2)}$$

3.10 The efficiency of the control device is the average of the three individual test run values determined in section 3.9.

3.11 As an alternative to establishing and monitoring the destruction efficiency operating parameters for catalytic oxidizers in §63.3967(b), the monitoring described in sections 3.12 and 3.13 may be used for magnet wire coating machines equipped with catalytic oxidizers.

sfrattini on LAPJZKW1R2 with $$_JOB
VerDate Sep<11>2014 09:16 Apr 04, 2023 Jkt 256165 PO 00000 Frm 00803 Fmt 8010 Sfmt 8002 Q:\40\256165.XXX PC31
ER02JA04.028</MATH> ER02JA04.029</MATH>

3.12 During the performance test, you must monitor and record the temperature either just before or just after the catalyst bed at least once every 15 minutes during each of the three test runs. Use the data collected during the performance test to calculate and record the average temperature either just before or just after the catalyst bed during the performance test. This is the minimum operating limit for your catalytic oxidizer and for the catalytic oxidizers in identical or very similar magnet wire coating machines represented by the tested magnet wire coating machine.

3.13 You must develop and implement an inspection and maintenance plan for your catalytic oxidizer(s). The plan must address, at a minimum, the elements specified in sections 3.14 and 3.15, and the elements specified in either (a) section 3.16 or (b) sections 3.17 and 3.18.

3.14 You must conduct a monthly external inspection of each catalytic oxidizer system, including the burner assembly and fuel supply lines for problems and, as necessary, adjust the equipment to assure proper air-to-fuel mixtures.

3.15 You must conduct an annual internal inspection of each accessible catalyst bed to check for channeling, abrasion, and settling. If problems are found, you must replace the catalyst bed or take corrective action consistent with the manufacturer's recommendations. This provision does not apply to internal catalysts which cannot be accessed without disassembling the magnet wire oven.

3.16 You must take a sample of each catalyst bed and perform an analysis of the catalyst activity (*i.e.*, conversion efficiency) following the manufacturer's or catalyst supplier's recommended procedures. This sampling and analysis must be done within the time period shown in Table 1 below of the most recent of the last catalyst activity test or the last catalyst replacement. For example, if the warranty for the catalyst is 3 years and the catalyst was more recently replaced then the sampling and analysis must be done within the earlier of 26,280 operating hours or 5 calendar years of the last catalyst replacement. If the warranty for the catalyst is 3 years and the catalyst was more recently tested then the sampling and analysis must be done within the earlier of 13,140 operating hours or 3 calendar years of the last catalyst activity test. If problems are found during the catalyst activity test, you must replace the catalyst bed or take corrective action consistent with the manufacturer's recommendations.

TABLE 1—CATALYST MONITORING REQUIREMENTS

If the catalyst was last (more recently) replaced and the warranty period is . . .	Then the time between catalyst replacement and the next catalyst activity test cannot exceed the earlier of . . .	And the catalyst was more recently tested, then the time between catalyst activity tests cannot exceed the earlier of . . .
1 year	8,760 operating hours or 5 calendar years.	8,760 operating hours or 3 calendar years.
2 years	15,520 operating hours or 5 calendar years.	8,760 operating hours or 3 calendar years.
3 years	26,280 operating hours or 5 calendar years.	13,100 operating hours or 3 calendar years.
4 years	35,040 operating hours or 5 calendar years.	17,520 operating hours or 3 calendar years.
5 or more years	43,800 operating hours or 5 calendar years.	21,900 operating hours or 3 calendar years.

3.17 During the performance test, you must determine the average concentration of organic compounds as carbon in the magnet wire oven exhaust stack gases (C_c in Equation 1 in §63.3966(d)) and the destruction efficiency of the catalytic oxidizer, and calculate the operating limit for oven exhaust stack gas concentration as follows. You must identify the highest organic HAP content coating used on this magnet wire coating machine or any identical or very similar magnet wire coating machines to which the same destruction efficiency test results will be applied. Calculate the percent emission reduction necessary to meet the magnet wire coating emission limit when using this coating. Calculate the average concentration of organic compounds as carbon in the magnet wire oven exhaust stack gases that would be equivalent to exactly meeting the magnet wire coating emissions limit when using the highest organic HAP content coating. The maximum operating limit for oven exhaust stack gas concentration equals 90 percent of this calculated concentration.

3.18 For each magnet wire coating machine equipped with a catalytic oxidizer you must perform an annual 10 minute test of the oven exhaust stack gases using EPA Method 25A. This test must be performed under steady state operating conditions similar to those at which the last destruction efficiency test for equipment of that type (either the specific magnet wire coating

sfrattini on LAPJZKW1R2 with $$_JOB
VerDate Sep<11>2014 09:16 Apr 04, 2023 Jkt 256165 PO 00000 Frm 00804 Fmt 8010 Sfmt 8002 Q:\40\256165.XXX PC31

machine or an identical or very similar magnet wire coating machine) was conducted. If the average exhaust stack gas concentration during the annual test of a magnet wire coating machine equipped with a catalytic oxidizer is greater than the operating limit established in section 3.17 then that is a deviation from the operating limit for that catalytic oxidizer. If problems are found during the annual 10-minute test of the oven exhaust stack gases, you must replace the catalyst bed or take other corrective action consistent with the manufacturer's recommendations.

3.19 If a catalyst bed is replaced and the replacement catalyst is not of like or better kind and quality as the old catalyst, then you must conduct a new performance test to determine destruction efficiency according to §63.3966 and establish new operating limits for that catalytic oxidizer unless destruction efficiency test results and operating limits for an identical or very similar unit (including consideration of the replacement catalyst) are available and approved for use for the catalytic oxidizer with the replacement catalyst.

3.20 If a catalyst bed is replaced and the replacement catalyst is of like or better kind and quality as the old catalyst, then a new performance test to determine destruction efficiency is not required and you may continue to use the previously established operating limits for that catalytic oxidizer.

Subpart NNNN—National Emission Standards for Hazardous Air Pollutants: Surface Coating of Large Appliances

SOURCE: 67 FR 48262, July 23, 2002, unless otherwise noted.

WHAT THIS SUBPART COVERS

§63.4080 What is the purpose of this subpart?

This subpart establishes national emission standards for hazardous air pollutants for large appliance surface coating facilities. This subpart also establishes requirements to demonstrate initial and continuous compliance with the emission limitations.

§63.4081 Am I subject to this subpart?

(a) You are subject to this subpart if you own or operate a facility that applies coatings to large appliance parts or products, and is a major source, is located at a major source, or is part of a major source of emissions of hazardous air pollutants (HAP), except as provided in paragraph (d) of this section. A major source of HAP emissions is any stationary source or group of stationary sources located within a contiguous area and under common control that emits or has the potential to emit any single HAP at a rate of 9.07 megagrams (Mg) (10 tons) or more per year or any combination of HAP at a rate of 22.68 Mg (25 tons) or more per year. You are not subject to this subpart if your large appliance surface coating facility is located at, or is part of, an area source of HAP emissions. An area source of HAP emissions is any stationary source or group of stationary sources located within a contiguous area and under common control that is not a major source.

(b) The large appliance surface coating source category includes any facility engaged in the surface coating of a large appliance part or product. Large appliance parts and products include but are not limited to cooking equipment; refrigerators, freezers, and refrigerated cabinets and cases; laundry equipment; dishwashers, trash compactors, and water heaters; and heating, ventilation, and air-conditioning (HVAC) units, air-conditioning (except motor vehicle) units, air-conditioning and heating combination units, comfort furnaces, and electric heat pumps. Specifically excluded are heat transfer coils and large commercial and industrial chillers.

(c) The large appliance surface coating activities and equipment to which this subpart applies are listed in paragraphs (c)(1) through (9) of this section:

(1) Surface preparation of large appliance parts and products;

(2) Preparation of a coating for application (e.g., mixing in thinners and other components);

(3) Application of a coating to large appliance parts and products using, for example, spray guns or dip tanks;

(4) Application of porcelain enamel, powder coating, and asphalt interior soundproofing coating;

(5) Flash-off, drying, or curing following the coating application operation;

(6) Cleaning of equipment used in coating operations (e.g., application equipment, hangers, racks);

sfrattini on LAPJZKW1R2 with $$_JOB
VerDate Sep<11>2014 09:16 Apr 04, 2023 Jkt 256165 PO 00000 Frm 00805 Fmt 8010 Sfmt 8010 Q:\40\256165.XXX PC31

(7) Storage of coatings, thinners, and cleaning materials;

(8) Conveying of coatings, thinners, and cleaning materials from storage areas to mixing areas or coating application areas, either manually (e.g., in buckets) or by automated means (e.g., transfer through pipes using pumps); and

(9) Handling and conveying of waste materials generated by coating operations.

(d) This subpart does not apply to surface coating that meets any of the criteria of paragraphs (d)(1) through (5) of this section.

(1) The surface coating of large appliance parts such as metal or plastic handles, hinges, or fasteners that have a wider use beyond large appliances is not subject to this subpart.

(2) The surface coating of large appliances conducted for the purpose of repairing or maintaining large appliances used by a facility and not for commerce is not subject to this subpart unless organic HAP emissions from the surface coating itself are as high as the rates specified in paragraph (a) of this section.

(3) The surface coating of heat transfer coils or large commercial and industrial chillers.

(4) The provisions of this subpart do not apply to research or laboratory facilities; janitorial, building, and facility maintenance operations; hobby shops operated for noncommercial purposes or coating applications using hand-held non-refillable aerosol containers.

(5) The provisions of this subpart do not apply to processes involving metal plating or phosphating of a substrate.

(e) If you own or operate an affected source that is subject to this subpart and at the same affected source you also perform surface coating subject to any other subparts in this part, you may choose for the affected source to comply with only one subpart. In order to choose this alternative, the total mass of organic HAP emissions from all surface coating operations in the affected source must be less than or equal to the total mass of organic HAP emissions that would result if it complied separately with all applicable subparts. You must make this comparison for the initial compliance period and report it in the Notification of Compliance Status as required in § 63.4110(b)(10) and in the Notification of Compliance Status required by the other subparts. If you choose this alternative, your demonstration of compliance with the other subpart constitutes compliance with this subpart.

§ 63.4082 What parts of my plant does this subpart cover?

(a) This subpart applies to each new, reconstructed, and existing affected source.

(b) The affected source is the collection of all of the items listed in paragraphs (b)(1) through (4) of this section that are part of the large appliance surface coating facility:

(1) All coating operations as defined in § 63.4181;

(2) All storage containers and mixing vessels in which coatings, thinners, and cleaning materials are stored or mixed;

(3) All manual and automated equipment and containers used for conveying coatings, thinners, and cleaning materials; and

(4) All storage containers and all manual and automated equipment and containers used for conveying waste materials generated by a coating operation.

(c) An affected source is a new affected source if you commenced its construction after July 23, 2002, and the construction is of a completely new large appliance surface coating facility where previously no large appliance surface coating facility had existed.

(d) An affected source is reconstructed if you meet the criteria as defined in § 63.2.

(e) An affected source is existing if it is not new or reconstructed.

§ 63.4083 When do I have to comply with this subpart?

The date by which you must comply with this subpart is called the compliance date. The compliance date for each type of affected source is specified in paragraphs (a) through (c) of this section. The compliance date begins the initial compliance period during which you conduct the initial compliance demonstration described in §§ 63.4140, 63.4150, and 63.4160.

sfrattini on LAPJZKW1R2 with $$_JOB
VerDate Sep<11>2014 09:16 Apr 04, 2023 Jkt 256165 PO 00000 Frm 00806 Fmt 8010 Sfmt 8010 Q:\40\256165.XXX PC31

(a) For a new or reconstructed affected source, the compliance date is the applicable date in paragraph (a)(1) or (2) of this section.

(1) If the initial startup of your new or reconstructed affected source is before July 23, 2002, the compliance date is July 23, 2002.

(2) If the initial startup of your new or reconstructed affected source occurs after July 23, 2002, the compliance date is the date of initial startup of your affected source.

(b) For an existing affected source, the compliance date is July 25, 2005.

(c) For an area source that increases its emissions or its potential to emit such that it becomes a major source of HAP emissions, the compliance date is specified in paragraphs (c)(1) and (2) of this section.

(1) For any portion of the source that becomes a new or reconstructed affected source subject to this subpart, the compliance date is the date of initial startup of the affected source, or the date the area source becomes a major source, or July 23, 2002, whichever is latest.

(2) For any portion of the source that becomes an existing affected source subject to this subpart, the compliance date is the date 1 year after the area source becomes a major source or July 25, 2005, whichever is later.

(d) You must meet the notification requirements in §63.4110 according to the dates specified in that section and in subpart A of this part. Some of the notifications must be submitted before the compliance dates described in paragraphs (a) through (c) of this section.

EMISSION LIMITATIONS

§63.4090 What emission limits must I meet?

(a) For an existing affected source, you must limit organic HAP emissions to the atmosphere to no more than 0.13 kilogram per liter (kg/liter) (1.1 pound per gallon (lb/gal)) of coating solids used during each compliance period.

(b) For a new or reconstructed affected source, you must limit organic HAP emissions to the atmosphere to no more than 0.022 kg/liter (0.18 lb/gal) of coating solids used during each compliance period.

§63.4091 What are my options for meeting the emission limits?

You must include all coatings, thinners, and cleaning materials used in the affected source when determining whether the organic HAP emission rate is equal to or less than the applicable emission limit in §63.4090. To make this determination, you must use at least one of the three compliance options listed in paragraphs (a) through (c) of this section. You may apply any of the compliance options to an individual coating operation or to multiple coating operations as a group or to the entire affected source. You may use different compliance options for different coating operations or at different times on the same coating operation. However, you may not use different compliance options at the same time on the same coating operation. If you switch between compliance options for any coating operation or group of coating operations, you must document this switch as required by §63.4130(c), and you must report it in the next semiannual compliance report required in §63.4120.

(a) *Compliant material option*. Demonstrate that the organic HAP content of each coating used in the coating operation(s) is less than or equal to the applicable emission limit in §63.4090, and that each thinner and each cleaning material used contains no organic HAP. You must meet all the requirements of §§63.4140, 63.4141, and 63.4142 to demonstrate compliance with the emission limit using this option.

(b) *Emission rate without add-on controls option*. Demonstrate that, based on data on the coatings, thinners, and cleaning materials used in the coating operation(s), the organic HAP emission rate for the coating operation(s) is less than or equal to the applicable emission limit in §63.4090. You must meet all the requirements of §§63.4150, 63.4151, and 63.4152 to demonstrate compliance with the emission limit using this option.

(c) *Emission rate with add-on controls option*. Demonstrate that, based on data on the coatings, thinners, and cleaning materials used in the coating operation(s) and the emission reductions achieved by emission capture and

sfrattini on LAPJZKW1R2 with $$_JOB
VerDate Sep<11>2014 09:16 Apr 04, 2023 Jkt 256165 PO 00000 Frm 00807 Fmt 8010 Sfmt 8010 Q:\40\256165.XXX PC31

add-on controls, the organic HAP emission rate for the coating operation(s) is less than or equal to the applicable emission limit in § 63.4090. If you use this compliance option, you must also demonstrate that all emission capture systems and add-on control devices for the coating operation(s) meet the operating limits required in § 63.4092, except for solvent recovery systems for which you conduct liquid-liquid material balances according to § 63.4161(h), and that you meet the work practice standards required in § 63.4093. You must meet all the requirements of §§ 63.4160 through 63.4168 to demonstrate compliance with the emission limits, operating limits, and work practice standards using this option.

§ 63.4092 What operating limits must I meet?

(a) For any coating operation(s) on which you use the compliant material option or the emission rate without add-on controls option, you are not required to meet any operating limits.

(b) For any controlled coating operation(s) on which you use the emission rate with add-on controls option, except those for which you use a solvent recovery system and conduct a liquid-liquid material balance according to § 63.4161(h), you must meet the operating limits specified in Table 1 to this subpart. These operating limits apply to the emission capture and control systems on the coating operation(s) for which you use this option, and you must establish the operating limits during the performance test according to the requirements in § 63.4167. You must meet the operating limits at all times after you establish them.

(c) If you use an add-on control device other than those listed in Table 1 to this subpart or wish to monitor an alternative parameter and comply with a different operating limit, you must apply to the U.S. Environmental Protection Agency (EPA) Administrator for approval of alternative monitoring under § 63.8(f).

§ 63.4093 What work practice standards must I meet?

(a) For any coating operation(s) on which you use the compliant material option or the emission rate without add-on controls option, you are not required to meet any work practice standards.

(b) If you use the emission rate with add-on controls option, you must develop and implement a work practice plan to minimize organic HAP emissions from the storage, mixing, and conveying of coatings, thinners, and cleaning materials used in, and waste materials generated by, the coating operation(s) for which you use this option; or you must meet an alternative standard as provided in paragraph (c) of this section. The plan must specify practices and procedures to ensure that, at a minimum, the elements specified in paragraphs (b)(1) through (5) of this section are implemented.

(1) All organic-HAP-containing coatings, thinners, cleaning materials, and waste materials must be stored in closed containers.

(2) Spills of organic-HAP-containing coatings, thinners, cleaning materials, and waste materials must be minimized.

(3) Organic-HAP-containing coatings, thinners, cleaning materials, and waste materials must be conveyed from one location to another in closed containers or pipes.

(4) Mixing vessels which contain organic-HAP-containing coatings and other materials must be closed except when adding to, removing, or mixing the contents.

(5) Emissions of organic HAP must be minimized during cleaning of storage, mixing, and conveying equipment.

(c) As provided in § 63.6(g), we, the EPA, may choose to grant you permission to use an alternative to the work practice standards in this section.

General Compliance Requirements

§ 63.4100 What are my general requirements for complying with this subpart?

(a) You must be in compliance with the emission limitations in this subpart as specified in paragraphs (a)(1) and (2) of this section.

(1) Any coating operation(s) for which you use the compliant material option or the emission rate without add-on controls option, as specified in

sfrattini on LAPJZKW1R2 with $$_JOB
VerDate Sep<11>2014 09:16 Apr 04, 2023 Jkt 256165 PO 00000 Frm 00808 Fmt 8010 Sfmt 8010 Q:\40\256165.XXX PC31

§63.4091(a) and (b), must be in compliance with the applicable emission limit in §63.4090 at all times.

(2) Any coating operation(s) for which you use the emission rate with add-on controls option, as specified in §63.4091(c), must be in compliance with the applicable emission limit in §63.4090 and work practice standards in §63.4093 at all times. Each controlled coating operation must be in compliance with the operating limits for emission capture systems and add-on control devices required by §63.4092 at all times, except for solvent recovery systems for which you conduct liquid-liquid material balances according to §63.4161(h).

(b) Before September 12, 2019, you must always operate and maintain your affected source, including all air pollution control and monitoring equipment you use for purposes of complying with this subpart, according to the provisions in §63.6(e)(1)(i). On and after September 12, 2019, at all times, the owner or operator must operate and maintain any affected source, including associated air pollution control equipment and monitoring equipment, in a manner consistent with safety and good air pollution control practices for minimizing emissions. The general duty to minimize emissions does not require the owner or operator to make any further efforts to reduce emissions if levels required by the applicable standard have been achieved. Determination of whether a source is operating in compliance with operation and maintenance requirements will be based on information available to the Administrator that may include, but is not limited to, monitoring results, review of operation and maintenance procedures, review of operation and maintenance records, and inspection of the affected source.

(c) If your affected source uses an emission capture system and add-on control device, you must maintain a log detailing the operation and maintenance of the emission capture system, add-on control device, and continuous parameter monitors during the period between the compliance date specified for your affected source in §63.4083 and the date when the initial emission capture system and add-on control device performance tests have been completed as specified in §63.4160. This requirement does not apply to a solvent recovery system for which you conduct a liquid-liquid material balance according to §63.4161(h) in lieu of conducting performance tests.

(d) Before September 12, 2019, if your affected source uses an emission capture system and add-on control device, you must develop a written startup, shutdown, and malfunction plan according to the provisions in §63.6(e)(3). The plan must address the startup, shutdown, and corrective actions in the event of a malfunction of the emission capture system or the add-on control device. The plan must also address any coating operation equipment that may cause increased emissions or that would affect capture efficiency if the process equipment malfunctions, such as conveyors that move parts among enclosures. A startup, shutdown, and malfunction plan is not required on and after September 12, 2019.

[67 FR 48262, July 23, 2002, as amended at 71 FR 20465, Apr. 20, 2006; 84 FR 9611, Mar. 15, 2019]

§63.4101 What parts of the General Provisions apply to me?

Table 2 to this subpart shows which parts of the General Provisions in §§63.1 through 63.15 apply to you.

NOTIFICATIONS, REPORTS, AND RECORDS

§63.4110 What notifications must I submit?

(a) You must submit the notifications in §§63.7(b) and (c), 63.8(f)(4), and 63.9(b) through (e) and (h) that apply to you by the dates specified in those sections, except as provided in paragraphs (a)(1) and (2) of this section.

(1) You must submit the Initial Notification required by §63.9(b) for an existing affected source no later than July 23, 2003, or no later than 120 days after the source becomes subject to this subpart. For a new or reconstructed affected source, you must submit the Initial Notification no later than 120 days after initial startup, November 20, 2002, or no later than 120 days after the source becomes subject to this subpart, whichever is later.

sfrattini on LAPJZKW1R2 with $$_JOB
VerDate Sep<11>2014 09:16 Apr 04, 2023 Jkt 256165 PO 00000 Frm 00809 Fmt 8010 Sfmt 8010 Q:\40\256165.XXX PC31

(2) You must submit the Notification of Compliance Status required by § 63.9(h) no later than 30 calendar days following the end of the initial compliance period described in § 63.4140, § 63.4150, or § 63.4160 that applies to your affected source.

(b) The Notification of Compliance Status must contain the information specified in paragraphs (b)(1) through (10) of this section and the applicable information specified in § 63.9(h).

(1) Company name and address.

(2) Statement by a responsible official with that official's name, title, and signature certifying the truth, accuracy, and completeness of the content of the report.

(3) Date of the report and beginning and ending dates of the reporting period. The reporting period is the initial compliance period described in § 63.4140, § 63.4150, or § 63.4160 that applies to your affected source.

(4) Identification of the compliance option or options specified in § 63.4091 that you used on each coating operation in the affected source during the initial compliance period.

(5) Statement of whether or not the affected source achieved the emission limitations for the initial compliance period.

(6) If you had a deviation, include the information in paragraphs (b)(6)(i) and (ii) of this section.

(i) A description of and statement of the cause of the deviation.

(ii) If you failed to meet the applicable emission limit in § 63.4090, include all the calculations you used to determine the kg organic HAP emitted per liter of coating solids used. You do not need to submit information provided by the materials suppliers or manufacturers or test reports.

(7) For each of the data items listed in paragraphs (b)(7)(i) through (iv) of this section that is required by the compliance option(s) you used to demonstrate compliance with the emission limit, include an example of how you determined the value, including calculations and supporting data. Supporting data can include a copy of the information provided by the supplier or manufacturer of the example coating or material or a summary of the results of testing conducted according to § 63.4141(a), (b), or (c). You do not need to submit copies of any test reports.

(i) Mass fraction of organic HAP for one coating, for one thinner, and for one cleaning material.

(ii) Volume fraction of coating solids for one coating.

(iii) Density for one coating, one thinner, and one cleaning material, except that if you use the compliant material option, only the example coating density is required.

(iv) The amount of waste materials and the mass of organic HAP contained in the waste materials for which you are claiming an allowance in Equation 1 of § 63.4151.

(8) The determination of kg organic HAP emitted per liter of coating solids used for the compliance option(s) you use, as specified in paragraphs (b)(8)(i) through (iii) of this section.

(i) For the compliant material option, provide an example determination of the organic HAP content for one coating, according to § 63.4141(d).

(ii) For the emission rate without add-on controls option, provide the calculation of the total mass of organic HAP emissions; the calculation of the total volume of coating solids used; and the calculation of the organic HAP emission rate, using Equations 1, 1A through 1C, 2, and 3, respectively, of § 63.4151.

(iii) For the emission rate with add-on controls option, provide the calculation of the total mass of organic HAP emissions for the coatings, thinners, and cleaning materials used, using Equations 1 and 1A through 1C of § 63.4151; the calculation of the total volume of coating solids used, using Equation 2 of § 63.4151; the calculation of the mass of organic HAP emission reduction by emission capture systems and add-on control devices, using Equations 1, 1A through 1C, 2, 3, and 3A through 3C of § 63.4161, as applicable; and the calculation of the organic HAP emission rate, using Equation 4 of § 63.4161.

(9) For the emission rate with add-on controls option, you must include the information specified in paragraphs (b)(9)(i) through (v) of this section, except that the requirements in paragraphs (b)(9)(i) through (iii) of this section do not apply to solvent recovery

sfrattini on LAPJZKW1R2 with $$_JOB
VerDate Sep<11>2014 09:16 Apr 04, 2023 Jkt 256165 PO 00000 Frm 00810 Fmt 8010 Sfmt 8010 Q:\40\256165.XXX PC31

systems for which you conduct liquid-liquid material balances according to § 63.4161(h).

(i) For each emission capture system, a summary of the data and copies of the calculations supporting the determination that the emission capture system is a permanent total enclosure (PTE) or a measurement of the emission capture system efficiency. Include a description of the protocol followed for measuring capture efficiency, summaries of any capture efficiency tests conducted, and any calculations supporting the capture efficiency determination. If you use the data quality objective (DQO) or lower confidence limit (LCL) approach, you must also include the statistical calculations to show you meet the DQO or LCL criteria in appendix A to subpart KK of this part. You do not need to submit complete test reports.

(ii) A summary of the results of each add-on control device performance test. You do not need to submit complete test reports.

(iii) A list of each emission capture system's and add-on control device's operating limits and a summary of the data used to calculate those limits.

(iv) A statement of whether or not you developed and implemented the work practice plan required by § 63.4093.

(v) Before September 12, 2019, a statement of whether or not you developed the startup, shutdown, and malfunction plan required by § 63.4100(d). This statement is not required on and after September 12, 2019.

(10) If you have chosen for your affected source to comply with the requirements of another subpart in lieu of the requirements of this subpart, as allowed in § 63.4081(d), your Notification of Compliance Status must include a statement certifying your intent, as well as documentation and supporting materials showing that, during the initial compliance period, your affected source's total organic HAP emissions were equal to or less than the organic HAP emissions that would have resulted from complying separately with each applicable subpart.

[67 FR 48262, July 23, 2002, as amended at 71 FR 20465, Apr. 20, 2006; 84 FR 9611, Mar. 15, 2019; 85 FR 73906, Nov. 19, 2020]

§ 63.4120 What reports must I submit?

You must submit semiannual compliance reports for each affected source according to the requirements of this section. The semiannual compliance reporting requirements of this section may be satisfied by reports required under other parts of the Clean Air Act (CAA), as specified in paragraph (a)(5) of this section.

(a) Unless the Administrator has approved a different schedule for submission of reports under § 63.10(a), you must prepare and submit each semiannual compliance report according to the dates specified in paragraphs (a)(1) through (4) of this section.

(1) The first semiannual compliance report must cover the first semiannual reporting period which begins the day after the end of the initial compliance period described in § 63.4140, § 63.4150, or § 63.4160 that applies to your affected source and ends on June 30 or December 31, whichever date is the first date following the end of the initial compliance period.

(2) Each subsequent semiannual compliance report must cover the subsequent semiannual reporting period from January 1 through June 30 or the semiannual reporting period from July 1 through December 31.

(3) Each semiannual compliance report must be postmarked or delivered no later than July 31 or January 31, whichever date is the first date following the end of the semiannual reporting period.

(4) For each affected source that is subject to permitting regulations pursuant to 40 CFR part 70 or 40 CFR part 71, and if the permitting authority has established dates for submitting semiannual reports pursuant to 40 CFR 70.6(a)(3)(iii)(A) or 40 CFR 71.6(a)(3)(iii)(A), you may submit the first and subsequent semiannual compliance reports according to the dates the permitting authority has established instead of the date specified in paragraph (a)(3) of this section.

(5) Each affected source that has obtained a title V operating permit pursuant to 40 CFR part 70 or 40 CFR part 71 must report all deviations as defined in this subpart in the semiannual monitoring report required by 40 CFR 70.6(a)(3)(iii)(A) or 40 CFR

sfrattini on LAPJZKW1R2 with $$_JOB
VerDate Sep<11>2014 09:16 Apr 04, 2023 Jkt 256165 PO 00000 Frm 00811 Fmt 8010 Sfmt 8010 Q:\40\256165.XXX PC31

71.6(a)(3)(iii)(A). If an affected source submits a semiannual compliance report pursuant to this section along with, or as part of, the semiannual monitoring report required by 40 CFR 70.6(a)(3)(iii)(A) or 40 CFR 71.6(a)(3)(iii)(A), and the semiannual compliance report includes all required information concerning deviations from any emission limitation in this subpart, its submission shall be deemed to satisfy any obligation to report the same deviations in the semiannual monitoring report. However, submission of a semiannual compliance report shall not otherwise affect any obligation the affected source may have to report deviations from permit requirements to the permitting authority.

(b) The semiannual compliance report must contain the information specified in paragraphs (b)(1) through (4) of this section and the information specified in paragraphs (c) through (j) of this section that is applicable to your affected source.

(1) Company name and address.

(2) Statement by a responsible official with that official's name, title, and signature certifying the truth, accuracy, and completeness of the content of the report.

(3) Date of report and beginning and ending dates of the reporting period. The reporting period is the 6-month period ending on June 30 or December 31.

(4) Identification of the compliance option or options specified in § 63.4091 that you used on each coating operation during the reporting period. If you switched between compliance options during the reporting period, you must report the beginning and ending dates you used each option.

(c) If there were no deviations from the emission limitations in §§ 63.4090, 63.4092, and 63.4093 that apply to you, the semiannual compliance report must include a statement that there were no deviations from the emission limitations during the reporting period.

(d) If you use the compliant material option and there was a deviation from the applicable emission limit in § 63.4090, the semiannual compliance report must contain the information in paragraph (d)(1) or (2) of this section, as applicable.

(1) Before September 12, 2019, the information in paragraphs (d)(1)(i) through (iv) of this section.

(i) Identification of each coating used that deviated from the emission limit, each thinner and cleaning material used that contained organic HAP, and the dates and time periods each was used.

(ii) The determination of the organic HAP content, according to § 63.4141(d), for each coating identified in paragraph (d)(1)(i) of this section. You do not need to submit background data supporting this calculation, for example, information provided by coating suppliers or manufacturers or test reports.

(iii) The determination of mass fraction of organic HAP for each thinner and cleaning material identified in paragraph (d)(1)(i) of this section. You do not need to submit background data supporting this calculation, for example, information provided by material suppliers or manufacturers or test reports.

(iv) A statement of the cause of each deviation.

(2) On and after September 12, 2019, if there was a deviation from the applicable emission limit in § 63.4090, the semiannual compliance report must contain the information in paragraphs (d)(2)(i) through (v) of this section.

(i) Identification of each coating used that deviated from the emission limit, each thinner and cleaning material used that contained organic HAP, and the date, time, and duration each was used.

(ii) The determination of the organic HAP content, according to § 63.4141(d), for each coating identified in paragraph (d)(2)(i) of this section. You do not need to submit background data supporting this calculation, for example, information provided by coating suppliers or manufacturers or test reports.

(iii) The determination of mass fraction of organic HAP for each thinner and cleaning material identified in paragraph (d)(2)(i) of this section. You do not need to submit background data supporting this calculation, for example, information provided by material suppliers or manufacturers or test reports.

sfrattini on LAPJZKW1R2 with $$_JOB
VerDate Sep<11>2014 09:16 Apr 04, 2023 Jkt 256165 PO 00000 Frm 00812 Fmt 8010 Sfmt 8010 Q:\40\256165.XXX PC31

(iv) A statement of the cause of each deviation (including unknown cause, if applicable).

(v) The number of deviations and, for each deviation, a list of the affected source or equipment, an estimate of the quantity of each regulated pollutant emitted over any emission limit in §63.4090, and a description of the method used to estimate the emissions.

(e) If you use the emission rate without add-on controls option and there was a deviation from the applicable emission limitation in §63.4090, the semiannual compliance report must contain the information in paragraph (e)(1) or (2), as applicable.

(1) Before September 12, 2019, the information in paragraphs (e)(1)(i) through (iii) of this section.

(i) The beginning and ending dates of each compliance period during which the organic HAP emission rate exceeded the emission limit.

(ii) The calculations used to determine the organic HAP emission rate for the compliance period in which the deviation occurred. You must provide the calculations for Equations 1, 1A through 1C, 2, and 3 in §63.4151; and, if applicable, the calculation used to determine the organic HAP in waste materials according to §63.4151(e)(4). You do not need to submit background data supporting these calculations, for example, information provided by materials suppliers or manufacturers or test reports.

(iii) A statement of the cause of each deviation.

(2) On and after September 12, 2019, if there was a deviation from the applicable emission limit in §63.4090, the semiannual compliance report must contain the information in paragraphs (e)(2)(i) through (iv) of this section.

(i) The beginning and ending dates of each compliance period during which the organic HAP emission rate exceeded the emission limit.

(ii) The calculations used to determine the organic HAP emission rate for the compliance period in which the deviation occurred. You must provide the calculations for Equations 1, 1A through 1C, 2, and 3 in §63.4151; and, if applicable, the calculation used to determine the organic HAP in waste materials according to §63.4151(e)(4). You do not need to submit background data supporting these calculations, for example, information provided by materials suppliers or manufacturers or test reports.

(iii) A statement of the cause of each deviation (including unknown cause, if applicable).

(iv) The number of deviations, a list of the affected source or equipment, an estimate of the quantity of each regulated pollutant emitted over any emission limit in §63.4090, and a description of the method used to estimate the emissions.

(f) If you use the emission rate with add-on controls option and there were no periods during which the continuous parameter monitoring systems (CPMS) were out-of-control as specified in §63.8(c)(7), the semiannual compliance report must include a statement that there were no periods during which the CPMS were out-of-control during the reporting period.

(g) If you use the emission rate with add-on controls option and there was a deviation from an emission limitation (including any periods when emissions bypassed the add-on control device and were diverted to the atmosphere), the semiannual compliance report must contain the information in paragraph (g)(1) or (2) of this section, as applicable.

(1) Before September 12, 2019, the information in paragraphs (g)(1)(i) through (xiv) of this section. This includes periods of startup, shutdown, and malfunction during which deviations occurred.

(i) The beginning and ending dates of each compliance period, during which the organic HAP emission rate exceeded the applicable emission limit in §63.4090.

(ii) The calculations used to determine the organic HAP emission rate for each compliance period in which a deviation occurred. You must provide the calculation of the total mass of organic HAP emissions for the coatings, thinners, and cleaning materials used during the compliance period, using Equations 1, 1A through 1C, and 2 of §63.4151 and, if applicable, the calculation used to determine the mass of organic HAP in waste materials according to §63.4151(e)(4); the calculation of

sfrattini on LAPJZKW1R2 with $$_JOB
VerDate Sep<11>2014 09:16 Apr 04, 2023 Jkt 256165 PO 00000 Frm 00813 Fmt 8010 Sfmt 8010 Q:\40\256165.XXX PC31

the total volume of coating solids used during the compliance period, using Equation 2 of § 63.4151; the calculation of the mass of organic HAP emission reduction during the compliance period by emission capture systems and add-on control devices, using Equations 1, 1A through 1C, 2, 3, and 3A through 3C of § 63.4161; and the calculation of the organic HAP emission rate, using Equation 4 of § 63.4161. You do not need to submit the background data supporting these calculations, for example, information provided by materials suppliers or manufacturers or test reports.

(iii) The date and time that each malfunction started and stopped.

(iv) A brief description of the CPMS.

(v) The date of the latest CPMS certification or audit.

(vi) The date and time that each CPMS was inoperative, except for zero (low-level) and high-level checks.

(vii) The date, time, and duration that each CPMS was out-of-control, including the information in § 63.8(c)(8).

(viii) The date and time period of each deviation from an operating limit in Table 1 to this subpart; date and time period of any bypass of the add-on control device; and whether each deviation occurred during a period of start-up, shutdown, or malfunction or during another period.

(ix) A summary of the total duration of each deviation from an operating limit in Table 1 to this subpart and bypass of the add-on control device during the semiannual reporting period and the total duration as a percent of the total source operating time during that semiannual reporting period.

(x) A breakdown of the total duration of the deviations from the operating limits in Table 1 to this subpart and bypasses of the add-on control device during the semiannual reporting period into those that were due to startup, shutdown, control equipment problems, process problems, other known causes, and other unknown causes.

(xi) A summary of the total duration of CPMS downtime during the semiannual reporting period and the total duration of CPMS downtime as a percent of the total source operating time during that semiannual reporting period.

(xii) A description of any changes in the CPMS, coating operation, emission capture system, or add-on control device since the last semiannual reporting period.

(xiii) For each deviation from the work practice standards, a description of the deviation, the date and time period of the deviation, and the actions you took to correct the deviation.

(xiv) A statement of the cause of each deviation.

(2) On and after September 12, 2019, the information in paragraphs (g)(2)(i) through (xii), (xiv), and (xv) of this section if there was a deviation from the applicable emission limit in § 63.4090 or the applicable operating limit(s) in Table 1 to this subpart (including any periods when emissions bypassed the add-on control device and were diverted to the atmosphere) and the information in paragraph (g)(2)(xiii) of this section if there was a deviation from the work practice standards in § 63.4093(b).

(i) The beginning and ending dates of each compliance period during which the organic HAP emission rate exceeded the applicable emission limit in § 63.4090.

(ii) The calculations used to determine the organic HAP emission rate for each compliance period in which a deviation occurred. You must provide the calculation of the total mass of organic HAP emissions for the coatings, thinners, and cleaning materials used during the compliance period, using Equations 1, 1A through 1C, and 2 of § 63.4151 and, if applicable, the calculation used to determine the mass of organic HAP in waste materials according to § 63.4151(e)(4); the calculation of the total volume of coating solids used during the compliance period, using Equation 2 of § 63.4151; the calculation of the mass of organic HAP emission reduction during the compliance period by emission capture systems and add-on control devices, using Equations 1, 1A through 1C, 2, 3, and 3A through 3C of § 63.4161; and the calculation of the organic HAP emission rate, using Equation 4 of § 63.4161. You do not need to submit the background data supporting these calculations, for example, information provided by materials

sfrattini on LAPJZKW1R2 with $$_JOB
VerDate Sep<11>2014 09:16 Apr 04, 2023 Jkt 256165 PO 00000 Frm 00814 Fmt 8010 Sfmt 8010 Q:\40\256165.XXX PC31

suppliers or manufacturers or test reports.

(iii) The date and time that each malfunction of the capture system or add-on control devices started and stopped.

(iv) A brief description of the CPMS.

(v) The date of the latest CPMS certification or audit.

(vi) For each instance that the CPMS was inoperative, except for zero (low-level) and high-level checks, the date, time, and duration that the CPMS was inoperative; the cause (including unknown cause) for the CPMS being inoperative; and descriptions of corrective actions taken.

(vii) For each instance that the CPMS was out-of-control, as specified in §63.8(c)(7), the date, time, and duration that the CPMS was out-of-control; the cause (including unknown cause) for the CPMS being out-of-control; and descriptions of corrective actions taken.

(viii) The date, time, and duration of each deviation from an operating limit in Table 1 to this subpart; and the date, time, and duration of any bypass of the add-on control device.

(ix) A summary of the total duration of each deviation from an operating limit in Table 1 to this subpart and bypass of the add-on control device during the semiannual reporting period and the total duration as a percent of the total source operating time during that semiannual reporting period.

(x) A breakdown of the total duration of the deviations from the operating limits in Table 1 to this subpart and bypasses of the add-on control device during the semiannual reporting period into those that were due to control equipment problems, process problems, other known causes, and other unknown causes.

(xi) A summary of the total duration of CPMS downtime during the semiannual reporting period and the total duration of CPMS downtime as a percent of the total source operating time during that semiannual reporting period.

(xii) A description of any changes in the CPMS, coating operation, emission capture system, or add-on control device since the last semiannual reporting period.

(xiii) For deviations from the work practice standards in §63.4093(b), the number of deviations and, for each deviation:

(A) A description of the deviation; the date, time, and duration of the deviation; and the actions you took to minimize emissions in accordance with §63.4100(b).

(B) The description required in paragraph (g)(2)(xiii)(A) of this section must include a list of the affected sources or equipment for which a deviation occurred and the cause of the deviation (including unknown cause, if applicable).

(xiv) For deviations from an emission limit in §63.4090 or operating limit in Table 1 to this subpart, a statement of the cause of each deviation (including unknown cause, if applicable).

(xv) For each deviation from an emission limit in §63.4090 or operating limit in Table 1 to this subpart, a list of the affected sources or equipment for which a deviation occurred, an estimate of the quantity of each regulated pollutant emitted over any emission limit in §63.4090, and a description of the method used to estimate the emissions.

(h) If you use the emission rate with add-on controls option, you must submit reports of performance test results for emission capture systems and add-on control devices no later than 60 days after completing the tests as specified in §63.10(d)(2).

(i) [Reserved]

(j) Before September 12, 2019, if you use the emission rate with add-on controls option and you have a startup, shutdown, or malfunction during the semiannual reporting period, you must submit the reports specified in paragraphs (j)(1) and (2) of this section. The reports specified in paragraphs (j)(1) and (2) of this section are not required on and after September 12, 2019.

(1) If your actions were consistent with your startup, shutdown, and malfunction plan (SSMP), you must include the information specified in §63.10(d)(5) in the semiannual compliance report required by paragraph (a) of this section.

(2) If your actions were not consistent with your SSMP, you must submit an immediate startup, shutdown,

sfrattini on LAPJZKW1R2 with $$_JOB
VerDate Sep<11>2014 09:16 Apr 04, 2023 Jkt 256165 PO 00000 Frm 00815 Fmt 8010 Sfmt 8010 Q:\40\256165.XXX PC31

and malfunction report as described in paragraphs (j)(2)(i) and (ii) of this section.

(i) You must describe the actions taken during the event in a report delivered by facsimile (fax), telephone, or other means to the Administrator within 2 working days after starting actions that are inconsistent with the plan.

(ii) You must submit a letter to the Administrator within 7 working days after the end of the event, unless you have made alternative arrangements with the Administrator as specified in § 63.10(d)(5)(ii). The letter must contain the information specified in § 63.10(d)(5)(ii).

[67 FR 48262, July 23, 2002, as amended at 84 FR 9611, Mar. 15, 2019]

§ 63.4121 What are my electronic reporting requirements?

(a) Beginning no later than June 13, 2019, you must submit the results of the performance test required in § 63.4120(h) following the procedure specified in paragraphs (a)(1) through (3) of this section.

(1) For data collected using test methods supported by the EPA's Electronic Reporting Tool (ERT) as listed on the EPA's ERT website (*https://www.epa.gov/electronic-reporting-air-emissions/electronic-reporting-tool-ert*) at the time of the test, you must submit the results of the performance test to the EPA via the Compliance and Emissions Data Reporting Interface (CEDRI). The CEDRI interface can be accessed through the EPA's Central Data Exchange (CDX) (*https://cdx.epa.gov/*). Performance test data must be submitted in a file format generated through the use of the EPA's ERT or an alternate electronic file format consistent with the extensible markup language (XML) schema listed on the EPA's ERT website.

(2) For data collected using test methods that are not supported by the EPA's ERT as listed on the EPA's ERT website at the time of the test, you must submit the results of the performance test to the Administrator at the appropriate address listed in § 63.13, unless the Administrator agrees to or specifies an alternate reporting method.

(3) If you claim that some of the performance test information being submitted under paragraph (a)(1) of this section is confidential business information (CBI), you must submit a complete file generated through the use of the EPA's ERT or an alternate electronic file consistent with the XML schema listed on the EPA's ERT website, including information claimed to be CBI, on a compact disc, flash drive or other commonly used electronic storage medium to the EPA. The electronic medium must be clearly marked as CBI and mailed to U.S. EPA/OAQPS/CORE CBI Office, Attention: Group Leader, Measurement Policy Group, MD C404–02, 4930 Old Page Rd., Durham, NC 27703. The same ERT or alternate file with the CBI omitted must be submitted to the EPA via the EPA's CDX as described in paragraph (a)(1) of this section.

(b) Beginning on March 15, 2021, the owner or operator shall submit the initial notifications required in § 63.9(b) and the notification of compliance status required in § 63.9(h) and § 63.4110(a)(2) and (b) to the EPA via CEDRI. The CEDRI can be accessed through the EPA's CDX (*https://cdx.epa.gov*). The owner or operator must upload to CEDRI an electronic copy of each applicable notification in portable document format (PDF). The applicable notification must be submitted by the deadline specified in this subpart, regardless of the method in which the reports are submitted. Owners or operators who claim that some of the information required to be submitted via CEDRI is CBI shall submit a complete report generated using the appropriate form in CEDRI or an alternate electronic file consistent with the XML schema listed on the EPA's CEDRI website, including information claimed to be CBI, on a compact disc, flash drive, or other commonly used electronic storage medium to the EPA. The electronic medium shall be clearly marked as CBI and mailed to U.S. EPA/OAQPS/CORE CBI Office, Attention: Group Leader, Measurement Policy Group, MD C404–02, 4930 Old Page Rd., Durham, NC 27703. The same file with the CBI omitted shall be submitted to the EPA via the EPA's CDX as described earlier in this paragraph.

sfrattini on LAPJZKW1R2 with $$_JOB
VerDate Sep<11>2014 09:16 Apr 04, 2023 Jkt 256165 PO 00000 Frm 00816 Fmt 8010 Sfmt 8010 Q:\40\256165.XXX PC31

(c) Beginning on March 15, 2021, or once the reporting template has been available on the CEDRI website for 1 year, whichever date is later, the owner or operator shall submit the semiannual compliance report required in §63.4120 to the EPA via CEDRI. The CEDRI interface can be accessed through the EPA's CDX (*https://cdx.epa.gov*). The owner or operator must use the appropriate electronic template on the CEDRI website for this subpart or an alternate electronic file format consistent with the XML schema listed on the CEDRI website (*https://www.epa.gov/electronic-reporting-air-emissions/compliance-and-emissions-data-reporting-interface-cedri*). The date report templates become available will be listed on the CEDRI website. If the reporting form for the semiannual compliance report specific to this subpart is not available in CEDRI at the time that the report is due, you must submit the report to the Administrator at the appropriate addresses listed in §63.13. Once the form has been available in CEDRI for 1 year, you must begin submitting all subsequent reports via CEDRI. The reports must be submitted by the deadlines specified in this subpart, regardless of the method in which the reports are submitted. Owners or operators who claim that some of the information required to be submitted via CEDRI is CBI shall submit a complete report generated using the appropriate form in CEDRI or an alternate electronic file consistent with XML schema listed on the EPA's CEDRI website, including information claimed to be CBI, on a compact disc, flash drive, or other commonly used electronic storage medium to the EPA. The electronic medium shall be clearly marked as CBI and mailed to U.S. EPA/OAQPS/CORE CBI Office, Attention: Group Leader, Measurement Policy Group, MD C404–02, 4930 Old Page Rd., Durham, NC 27703. The same file with the CBI omitted shall be submitted to the EPA via the EPA's CDX as described earlier in this paragraph.

(d) If you are required to electronically submit a report through CEDRI in the EPA's CDX, and due to a planned or actual outage of either the EPA's CEDRI or CDX systems within the period of time beginning 5 business days prior to the date that the submission is due, you will be or are precluded from accessing CEDRI or CDX and submitting a required report within the time prescribed, you may assert a claim of EPA system outage for failure to timely comply with the reporting requirement. You must submit notification to the Administrator in writing as soon as possible following the date you first knew, or through due diligence should have known, that the event may cause or caused a delay in reporting. You must provide to the Administrator a written description identifying the date, time and length of the outage; a rationale for attributing the delay in reporting beyond the regulatory deadline to the EPA system outage; describe the measures taken or to be taken to minimize the delay in reporting; and identify a date by which you propose to report, or if you have already met the reporting requirement at the time of the notification, the date you reported. In any circumstance, the report must be submitted electronically as soon as possible after the outage is resolved. The decision to accept the claim of EPA system outage and allow an extension to the reporting deadline is solely within the discretion of the Administrator.

(e) If you are required to electronically submit a report through CEDRI in the EPA's CDX and a force majeure event is about to occur, occurs, or has occurred or there are lingering effects from such an event within the period of time beginning 5 business days prior to the date the submission is due, the owner or operator may assert a claim of force majeure for failure to timely comply with the reporting requirement. For the purposes of this section, a force majeure event is defined as an event that will be or has been caused by circumstances beyond the control of the affected facility, its contractors, or any entity controlled by the affected facility that prevents you from complying with the requirement to submit a report electronically within the time period prescribed. Examples of such events are acts of nature (*e.g.*, hurricanes, earthquakes, or floods), acts of war or terrorism, or equipment failure or safety hazard beyond the control of

sfrattini on LAPJZKW1R2 with $$_JOB
VerDate Sep<11>2014 09:16 Apr 04, 2023 Jkt 256165 PO 00000 Frm 00817 Fmt 8010 Sfmt 8010 Q:\40\256165.XXX PC31

the affected facility (*e.g.*, large scale power outage). If you intend to assert a claim of force majeure, you must submit notification to the Administrator in writing as soon as possible following the date you first knew, or through due diligence should have known, that the event may cause or caused a delay in reporting. You must provide to the Administrator a written description of the force majeure event and a rationale for attributing the delay in reporting beyond the regulatory deadline to the force majeure event; describe the measures taken or to be taken to minimize the delay in reporting; and identify a date by which you propose to report, or if you have already met the reporting requirement at the time of the notification, the date you reported. In any circumstance, the reporting must occur as soon as possible after the force majeure event occurs. The decision to accept the claim of force majeure and allow an extension to the reporting deadline is solely within the discretion of the Administrator.

[84 FR 9613, Mar. 15, 2019]

§ 63.4130 What records must I keep?

You must collect and keep records of the data and information specified in this section. Failure to collect and keep these records is a deviation from the applicable standard.

(a) A copy of each notification and report that you submitted to comply with this subpart and the documentation supporting each notification and report.

(b) A current copy of information provided by materials suppliers or manufacturers such as manufacturer's formulation data or test data used to determine the mass fraction of organic HAP and density for each coating, thinner, and cleaning material and the volume fraction of coating solids for each coating. If you conducted testing to determine mass fraction of organic HAP, density, or volume fraction of coating solids, you must keep a copy of the complete test report. If you use information provided to you by the manufacturer or supplier of the material that was based on testing, you must keep the summary sheet of results provided to you by the manufacturer or supplier. You are not required to obtain the test report or other supporting documentation from the manufacturer or supplier.

(c) For each compliance period, a record of the time periods (beginning and ending dates and times) and the coating operations at which each compliance option was used and a record of all determinations of kg organic HAP per liter of coating solids for the compliance option(s) you used, as specified in paragraphs (c)(1) through (3) of this section.

(1) For the compliant material option, a record of the determination of the organic HAP content for each coating, according to § 63.4141(d).

(2) For the emission rate without add-on controls option, a record of the calculation of the total mass of organic HAP emissions for the coatings, thinners, and cleaning materials used each month, using Equations 1 and 1A through 1C of § 63.4151 and, if applicable, the calculations used to determine the mass of organic HAP in waste materials according to § 63.4151(e)(4); the calculation of the total volume of coating solids used each month, using Equation 2 of § 63.4151; and the calculation of the organic HAP emission rate, using Equation 3 of § 63.4151.

(3) For the emission rate with add-on controls option, a record of the calculation of the total mass of organic HAP emissions for the coatings, thinners, and cleaning materials used each month, using Equations 1 and 1A through 1C of § 63.4151 and, if applicable, the calculation used to determine mass of organic HAP in waste materials according to § 63.4151(e)(4); the calculation of the total volume of coating solids used each month, using Equation 2 of § 63.4151; the calculation of the mass of organic HAP emission reduction by emission capture systems and add-on control devices, using Equations 1, 1A through 1C, 2, 3, and 3A through 3C of § 63.4161, as applicable; and the calculation of the organic HAP emission rate, using Equation 4 of § 63.4161.

(d) A record of the name and volume of each coating, thinner, and cleaning material used during each compliance period.

(e) A record of the mass fraction of organic HAP for each coating, thinner,

sfrattini on LAPJZKW1R2 with $$_JOB
VerDate Sep<11>2014 09:16 Apr 04, 2023 Jkt 256165 PO 00000 Frm 00818 Fmt 8010 Sfmt 8010 Q:\40\256165.XXX PC31

and cleaning material used during each compliance period.

(f) A record of the volume fraction of coating solids for each coating used during each compliance period except for zero-HAP coatings for which volume solids determination is not required as allowed in §63.4141.

(g) A record of the density for each coating used during each compliance period except for zero-HAP coatings for which volume solids determination is not required as allowed in §63.4141 and, if you use either the emission rate without add-on controls or the emission rate with add-on controls compliance option, a record of the density for each thinner and cleaning material used during each compliance period.

(h) If you use an allowance in Equation 1 of §63.4151 for organic HAP contained in waste materials sent to or designated for shipment to a treatment, storage, and disposal facility (TSDF) according to §63.4151(e)(4), you must keep records of the information specified in paragraphs (h)(1) through (3) of this section.

(1) The name and address of each TSDF to which you sent waste materials for which you use an allowance in Equation 1 of §63.4151, a statement of which subparts under 40 CFR parts 262, 264, 265, and 266 apply to the facility, and the date of each shipment.

(2) Identification of the coating operations producing waste materials included in each shipment and the month or months in which you used the allowance for these materials in Equation 1 of §63.4151.

(3) The methodology used in accordance with §63.4151(e)(4) to determine the total amount of waste materials sent to or the amount collected, stored, and designated for transport to a TSDF each month; and the methodology to determine the mass of organic HAP contained in these waste materials. This must include the sources for all data used in the determination, methods used to generate the data, frequency of testing or monitoring, and supporting calculations and documentation, including the waste manifest for each shipment.

(i) [Reserved]

(j) Before September 12, 2019, you must keep records of the date, time, and duration of each deviation. On and after September 12, 2019, for each deviation from an emission limitation reported under §63.4120(d), (e), and (g), a record of the information specified in paragraphs (j)(1) through (4) of this section, as applicable.

(1) The date, time, and duration of the deviation, as reported under §63.4120(d), (e), and (g).

(2) A list of the affected sources or equipment for which the deviation occurred and the cause of the deviation, as reported under §63.4120(d), (e), and (g).

(3) An estimate of the quantity of each regulated pollutant emitted over any applicable emission limit in §63.4090 or any applicable operating limit in Table 1 to this subpart, and a description of the method used to calculate the estimate, as reported under §63.4120(d), (e), and (g).

(4) A record of actions taken to minimize emissions in accordance with §63.4100(b) and any corrective actions taken to return the affected unit to its normal or usual manner of operation.

(k) If you use the emission rate with add-on controls option, you must also keep the records specified in paragraphs (k)(1) through (8) of this section.

(1) Before September 12, 2019, for each deviation, a record of whether the deviation occurred during a period of startup, shutdown, or malfunction. The record in this paragraph (k)(1) is not required on and after September 12, 2019.

(2) Before September 12, 2019, the records in §63.6(e)(3)(iii) through (v) related to startup, shutdown, and malfunction. The records in this paragraph (k)(2) are not required on and after September 12, 2019.

(3) The records required to show continuous compliance with each operating limit specified in Table 1 to this subpart that applies to you.

(4) For each capture system that is a PTE, the data and documentation you used to support a determination that the capture system meets the criteria in Method 204 of appendix M to 40 CFR part 51 for a PTE and has a capture efficiency of 100 percent, as specified in §63.4165(a).

sfrattini on LAPJZKW1R2 with $$_JOB
VerDate Sep<11>2014 09:16 Apr 04, 2023 Jkt 256165 PO 00000 Frm 00819 Fmt 8010 Sfmt 8010 Q:\40\256165.XXX PC31

(5) For each capture system that is not a PTE, the data and documentation you used to determine capture efficiency according to the requirements specified in §§ 63.4164 and 63.4165(b) through (e) including the records specified in paragraphs (k)(5)(i) through (iii) of this section that apply to you.

(i) *Records for a liquid-to-uncaptured-gas protocol using a temporary total enclosure or building enclosure.* Records of the mass of total volatile hydrocarbon (TVH) as measured by Method 204A or F of appendix M to 40 CFR part 51 for each material used in the coating operation, and the total TVH for all materials used during each capture efficiency test run, including a copy of the test report. Records of the mass of TVH emissions not captured by the capture system that exited the temporary total enclosure or building enclosure during each capture efficiency test run, as measured by Method 204D or E of appendix M to 40 CFR part 51, including a copy of the test report. Records documenting that the enclosure used for the capture efficiency test met the criteria in Method 204 of appendix M to 40 CFR part 51 for either a temporary total enclosure or a building enclosure.

(ii) *Records for a gas-to-gas protocol using a temporary total enclosure or a building enclosure.* Records of the mass of TVH emissions captured by the emission capture system as measured by Method 204B or C of appendix M to 40 CFR part 51 at the inlet to the add-on control device, including a copy of the test report. Records of the mass of TVH emissions not captured by the capture system that exited the temporary total enclosure or building enclosure during each capture efficiency test run, as measured by Method 204D or E of appendix M to 40 CFR part 51, including a copy of the test report. Records documenting that the enclosure used for the capture efficiency test met the criteria in Method 204 of appendix M to 40 CFR part 51 for either a temporary total enclosure or a building enclosure.

(iii) *Records for an alternative protocol.* Records needed to document a capture efficiency determination using an alternative method or protocol as specified in § 63.4165(e), if applicable.

(6) The records specified in paragraphs (k)(6)(i) and (ii) of this section for each add-on control device organic HAP destruction or removal efficiency determination as specified in § 63.4166.

(i) Records of each add-on control device performance test conducted according to §§ 63.4164 and 63.4166.

(ii) Records of the coating operation conditions during the add-on control device performance test showing that the performance test was conducted under representative operating conditions.

(7) Records of the data and calculations you used to establish the emission capture and add-on control device operating limits as specified in § 63.4167 and to document compliance with the operating limits as specified in Table 1 of this subpart.

(8) A record of the work practice plan required by § 63.4093, and documentation that you are implementing the plan on a continuous basis.

[67 FR 48262, July 23, 2002, as amended at 84 FR 9614, Mar. 15, 2019]

§ 63.4131 In what form and for how long must I keep my records?

(a) Your records must be in a form suitable and readily available for expeditious review, according to § 63.10(b)(1). Where appropriate, the records may be maintained as electronic spreadsheets or as a data base. Any records required to be maintained by this subpart that are in reports that were submitted electronically via the EPA's CEDRI may be maintained in electronic format. This ability to maintain electronic copies does not affect the requirement for facilities to make records, data, and reports available upon request to a delegated air agency or the EPA as part of an on-site compliance evaluation.

(b) As specified in § 63.10(b)(1), you must keep each record for 5 years following the date of each occurrence, measurement, maintenance, corrective action, report, or record.

(c) You must keep each record on site for at least 2 years after the date of each occurrence, measurement, maintenance, corrective action, report, or record, according to § 63.10(b)(1). You

sfrattini on LAPJZKW1R2 with $$_JOB
VerDate Sep<11>2014 09:16 Apr 04, 2023 Jkt 256165 PO 00000 Frm 00820 Fmt 8010 Sfmt 8010 Q:\40\256165.XXX PC31

may keep the records off site for the remaining 3 years.

[67 FR 48262, July 23, 2002, as amended at 84 FR 9615, Mar. 15, 2019]

COMPLIANCE REQUIREMENTS FOR THE COMPLIANT MATERIAL OPTION

§63.4140 By what date must I conduct the initial compliance demonstration?

You must complete the initial compliance demonstration for the initial compliance period according to the requirements in §63.4141. The initial compliance period begins on the applicable compliance date specified in §63.4083 and ends on the last day of the first full month after the compliance date. If the compliance date occurs on any day other than the first day of a month, then the initial compliance period extends through the end of that month plus the next month. The initial compliance demonstration includes the determination according to §63.4141 and supporting documentation showing that, during the initial compliance period, you used no coating with an organic HAP content that exceeded the applicable emission limit in §63.4090, and that you used no thinners or cleaning materials that contained organic HAP.

§63.4141 How do I demonstrate initial compliance with the emission limitations?

You may use the compliant material option for any individual coating operation, for any group of coating operations in the affected source, or for all the coating operations in the affected source. You must use either the emission rate without add-on controls option or the emission rate with add-on controls option for any coating operation(s) in the affected source for which you do not use this option. To demonstrate initial compliance using the compliant material option, the coating operation or group of coating operations must use no coating with an organic HAP content that exceeds the applicable emission limit in §63.4090 and must use no thinner or cleaning material that contains organic HAP, as determined according to this section during the initial compliance period. Any coating operation(s) for which you use the compliant material option is not required to meet the operating limits or work practice standards required in §§63.4092 and 63.4093, respectively. To demonstrate initial compliance with the emission limitations using the compliant material option, you must meet all the requirements of this section for the coating operation(s) using this option. Use the procedures in this section on each coating, thinner, and cleaning material in the condition it is in when it is received from its manufacturer or supplier and prior to any alteration. You do not need to redetermine the HAP content of coatings, thinners, or cleaning materials that have been reclaimed onsite and reused in the coating operation(s) for which you use the compliant material option, provided these materials in their condition as received were demonstrated to comply with the compliant material option. If the mass fraction of organic HAP of a coating equals zero, determined according to paragraph (a) of this section, and you use the compliant material option, you are not required to comply with paragraphs (b) and (c) of this section for that coating.

(a) *Determine the mass fraction of organic HAP for each material used.* You must determine the mass fraction of organic HAP for each coating, thinner, and cleaning material used during the compliance period by using one of the options in paragraphs (a)(1) through (5) of this section.

(1) *Method 311 (appendix A to 40 CFR part 63).* You may use Method 311 for determining the mass fraction of organic HAP. Use the procedures specified in paragraphs (a)(1)(i) and (ii) of this section when performing a Method 311 test.

(i) Count each organic HAP in Table 5 to this subpart that is measured to be present at 0.1 percent by mass or more and at 1.0 percent by mass or more for other organic HAP compounds. For example, if toluene (not listed in Table 5 to this subpart) is measured to be 0.5 percent of the material by mass, you do not have to count it. Express the mass fraction of each organic HAP you count as a value truncated to four places after the decimal point (for example, 0.3791).

sfrattini on LAPJZKW1R2 with $$_JOB
VerDate Sep<11>2014 09:16 Apr 04, 2023 Jkt 256165 PO 00000 Frm 00821 Fmt 8010 Sfmt 8010 Q:\40\256165.XXX PC31

(ii) Calculate the total mass fraction of organic HAP in the test material by adding up the individual organic HAP mass fractions and truncating the result to three places after the decimal point (for example, 0.763).

(2) *Method 24 in appendix A–7 of part 60.* For coatings, you may use Method 24 to determine the mass fraction of nonaqueous volatile matter and use that value as a substitute for mass fraction of organic HAP. As an alternative to using Method 24, you may use ASTM D2369–10 (R2015), ''Test Method for Volatile Content of Coatings'' (incorporated by reference, *see* § 63.14).

(3) *Alternative method.* You may use an alternative test method for determining the mass fraction of organic HAP once the Administrator has approved it. You must follow the procedure in § 63.7(f) to submit an alternative test method for approval.

(4) *Information from the supplier or manufacturer of the material.* You may rely on information other than that generated by the test methods specified in paragraphs (a)(1) through (3) of this section, such as manufacturer's formulation data if they represent each organic HAP in Table 5 to this subpart that is present at 0.1 percent by mass or more and at 1.0 percent by mass or more for other organic HAP compounds. For example, if toluene (not listed in Table 5 to this subpart) is 0.5 percent of the material by mass, you do not have to count it. If there is a disagreement between such information and results of a test conducted according to paragraphs (a)(1) through (3) of this section, then the test method results will take precedence.

(5) *Solvent blends.* Solvent blends may be listed as single components for some materials in data provided by manufacturers or suppliers. Solvent blends may contain organic HAP which must be counted toward the total organic HAP mass fraction of the materials. When test data and manufacturer's data for solvent blends are not available, you may use the default values for mass fraction of organic HAP in these solvent blends listed in Table 3 or 4 of this subpart. If you use the tables, you must use the values in Table 3 for all solvent blends that match Table 3 entries, and you may only use Table 4 if the solvent blends in the materials you use do not match any of the solvent blends in Table 3, and you only know whether the blend is aliphatic or aromatic. However, if the results of a Method 311 test indicate higher values than those listed on Table 3 or 4 of this subpart, the Method 311 results will take precedence.

(b) *Determine the volume fraction of coating solids for each coating.* You must determine the volume fraction of coating solids (liters of coating solids per liter of coating) for each coating used during the compliance period by a test, by information provided by the supplier or the manufacturer of the material, or by calculation as specified in paragraphs (b)(1) through (3) of this section.

(1) *ASTM D2697–03 (R2014) or D6093–97 (R2016). You may* use ASTM D2697–03 (R2014), ''Standard Test Method for Volume Nonvolatile Matter in Clear or Pigmented Coatings,'' or D6093–97 (R2016), ''Standard Test Method for Percent Volume Nonvolatile Matter in Clear or Pigmented Coatings Using a Helium Gas Pycnometer'' (incorporated by reference, *see* § 63.14) to determine the volume fraction of coating solids for each coating. Divide the nonvolatile volume percent obtained with the methods by 100 to calculate volume fraction of coating solids.

(2) *Information from the supplier or manufacturer of the material.* You may obtain the volume fraction of coating solids for each coating from the supplier or manufacturer.

(3) *Calculation of volume fraction of coating solids.* If the volume fraction of coating solids cannot be determined using the options in paragraphs (b)(1) and (2) of this section, you must determine it using Equation 1 of this section:

$$V_s = 1 - \frac{m_{volatiles}}{D_{avg}} \qquad \text{(Eq. 1)}$$

Where:

V_s = volume fraction of coating solids, liters coating solids per liter coating.

$m_{volatiles}$ = total volatile matter content of the coating, including HAP, volatile organic compounds (VOC), water, and exempt compounds, determined according to Method 24 in appendix A–7 of part 60, or according to ASTM D2369–10 (R2015)

sfrattini on LAPJZKW1R2 with $$_JOB
VerDate Sep<11>2014 09:16 Apr 04, 2023 Jkt 256165 PO 00000 Frm 00822 Fmt 8010 Sfmt 8010 Q:\40\256165.XXX PC31
ER23JY02.018

Standard Test Method for Volatile Content of Coatings (incorporated by reference, *see* §63.14), grams volatile matter per liter coating.

D_{avg} = average density of volatile matter in the coating, grams volatile matter per liter volatile matter, determined from test results using ASTM D1475–13, ''Standard Test Method for Density of Liquid Coatings, Inks, and Related Products,'' ASTM D2111–10 (R2015), ''Standard Test Methods for Specific Gravity of Halogenated Organic Solvents and Their Admixtures'' (both incorporated by reference, *see* §63.14); if you use this method, the specific gravity must be corrected to a standard temperature, information from the supplier or manufacturer of the material, or reference sources providing density or specific gravity data for pure materials. If there is disagreement between ASTM D1475–13 or ASTM D2111–10 (R2015) test results and other information sources, the test results will take precedence.

(c) *Determine the density of each coating*. Determine the density of each coating used during the compliance period from test results using ASTM D1475–13, ''Standard Test Method for Density of Liquid Coatings, Inks, and Related Products, ASTM D2111–10 (R2015), ''Standard Test Methods for Specific Gravity of Halogenated Organic Solvents and Their Admixtures''(both incorporated by reference, *see* §63.14); if you use this method, the specific gravity must be corrected to a standard temperature, information from the supplier or manufacturer of the material, or reference sources providing density or specific gravity data for pure materials. If there is disagreement between test results from ASTM D1475–13 or ASTM D2111–10 (R2015) and the supplier's or manufacturer's information, the test results will take precedence.

(d) Determine the organic HAP content of each coating. Determine the organic HAP content, kg organic HAP per liter coating solids, of each coating used during the compliance period, using Equation 2 of this section, except that if the mass fraction of organic HAP equals zero, then the organic HAP content also equals zero and you are not required to use Equation 2 to calculate the organic HAP content:

$$H_c = (D_c)(W_c) / V_s \qquad \text{(Eq. 2)}$$

Where:

H_c = organic HAP content of the coating, kg organic HAP per liter coating solids.

D_c = density of coating, kg coating per liter coating, determined according to paragraph (c) of this section.

W_c = mass fraction of organic HAP in the coating, kg organic HAP per kg coating, determined according to paragraph (a) of this section.

V_s = volume fraction of coating solids, liters coating solids per liter coating, determined according to paragraph (b) of this section.

(e) The organic HAP content for each coating used during the initial compliance period must be less than or equal to the applicable emission limit in §63.4090; and each thinner and cleaning material used during the initial compliance period must contain no organic HAP, determined according to paragraph (a) of this section. You must keep all records required by §§63.4130 and 63.4131. As part of the Notification of Compliance Status required in §63.4110, you must identify the coating operation(s) for which you used the compliant material option and submit a statement that the coating operation(s) was (were) in compliance with the emission limitations during the initial compliance period because you used no coatings for which the organic HAP content exceeds the applicable emission limit in §63.4090, and you used no thinners or cleaning materials that contain organic HAP, determined according to paragraph (a) of this section.

[67 FR 48262, July 23, 2002, as amended at 84 FR 9615, Mar. 15, 2019]

§63.4142 How do I demonstrate continuous compliance with the emission limitations?

(a) For each compliance period, to demonstrate continuous compliance, you must use no coating for which the organic HAP content, determined according to §63.4141(d), exceeds the applicable emission limit in §63.4090, and use no thinner or cleaning material that contains organic HAP, determined according to §63.4141(a). Each month following the initial compliance period described in §63.4140 is a compliance period.

sfrattini on LAPJZKW1R2 with $$_JOB
VerDate Sep<11>2014 09:16 Apr 04, 2023 Jkt 256165 PO 00000 Frm 00823 Fmt 8010 Sfmt 8010 Q:\40\256165.XXX PC31
ER23JY02.019</MATH>

(b) If you choose to comply with the emission limitations by using the compliant material option, the use of any coating, thinner, or cleaning material that does not meet the criteria specified in paragraph (a) of this section is a deviation from the emission limitations that must be reported as specified in §§ 63.4110(b)(6) and 63.4120(d).

(c) As part of each semiannual compliance report required by § 63.4120, you must submit a statement that you were in compliance with the emission limitations during the reporting period because, during the compliance period, you used no thinners or cleaning materials that contained organic HAP, and you used no coatings for which the organic HAP content exceeded the applicable emission limit in § 63.4090.

(d) You must maintain records as specified in §§ 63.4130 and 63.4131.

[67 FR 48262, July 23, 2002, as amended at 84 FR 9616, Mar. 15, 2019]

COMPLIANCE REQUIREMENTS FOR THE EMISSION RATE WITHOUT ADD-ON CONTROLS OPTION

§ 63.4150 By what date must I conduct the initial compliance demonstration?

You must complete the initial compliance demonstration for the initial compliance period according to the requirements of § 63.4151. The initial compliance period begins on the applicable compliance date specified in § 63.4083 and ends on the last day of the first full month after the compliance date. If the compliance date occurs on any day other than the first day of a month, then the initial compliance period extends through the end of that month plus the next month. The initial compliance demonstration includes the calculations according to § 63.4151 and supporting documentation showing that the organic HAP emission rate for the initial compliance period was equal to or less than the applicable emission limit in § 63.4090.

§ 63.4151 How do I demonstrate initial compliance with the emission limitations?

You may use the emission rate without add-on controls option for any individual coating operation, for any group of coating operations in the affected source, or for all of the coating operations in the affected source. You must use either the compliant material option or the emission rate with add-on controls option for any coating operation(s) in the affected source for which you do not use this option. To demonstrate initial compliance using the emission rate without add-on controls option, the coating operation(s) must meet the applicable emission limit in § 63.4090 but not the operating limits or work practice standards in §§ 63.4092 and 63.4093, respectively, during the initial compliance period. You must meet all of the requirements of this section to demonstrate initial compliance with the applicable emission limit in § 63.4090 for the coating operation(s). When calculating the organic HAP emission rate according to this section, do not include any coatings, thinners, or cleaning materials used on coating operations for which you use the compliant material option or the emission rate with add-on controls option. You do not need to redetermine the mass of organic HAP in coatings, thinners, or cleaning materials that have been reclaimed onsite and reused in the coating operation(s) for which you use the emission rate without add-on controls option.

(a) *Determine the mass fraction of organic HAP for each material.* Determine the mass fraction of organic HAP for each coating, thinner, and cleaning material used during the compliance period according to the requirements in § 63.4141(a).

(b) *Determine the volume fraction of coating solids for each coating.* Determine the volume fraction of coating solids for each coating used during the compliance period according to the requirements in § 63.4141(b).

(c) *Determine the density of each material.* Determine the density of each coating, thinner, and cleaning material used during the compliance period according to the requirements in § 63.4141(c).

(d) *Determine the volume of each material used during the compliance period.* Determine the volume (liters) of each coating, thinner, and cleaning material used during the compliance period by measurement or usage records.

sfrattini on LAPJZKW1R2 with $$_JOB
VerDate Sep<11>2014 09:16 Apr 04, 2023 Jkt 256165 PO 00000 Frm 00824 Fmt 8010 Sfmt 8010 Q:\40\256165.XXX PC31

(e) *Calculate the mass of organic HAP emissions during the compliance period.* The mass of organic HAP emissions is the combined mass of organic HAP contained in all coatings, thinners, and cleaning materials used during the compliance period minus the organic HAP in certain waste materials. Calculate it using Equation 1 of this section.

$$H_e = A + B + C - R_w \qquad \text{(Eq. 1)}$$

Where:

H_e = total mass of organic HAP emissions during the compliance period, kg.

A = total mass of organic HAP in the coatings used during the compliance period, kg, as calculated in Equation 1A of this section.

B = total mass of organic HAP in the thinners used during the compliance period, kg, as calculated in Equation 1B of this section.

C = total mass of organic HAP in the cleaning materials used during the compliance period, kg, as calculated in Equation 1C of this section.

R_w = total mass of organic HAP in waste materials sent or designated for shipment to a hazardous waste TSDF for treatment or disposal during the compliance period, kg, determined according to paragraph (e)(4) of this section. (You may assign a value of zero to R_w if you do not wish to use this allowance.)

(1) Calculate the kg organic HAP in the coatings used during the compliance period, using Equation 1A of this section:

$$A = \sum_{i=1}^{m} \left(Vol_{c,i}\right)\left(D_{c,i}\right)\left(W_{c,i}\right) \qquad \text{(Eq. 1A)}$$

Where:

A = total mass of organic HAP in the coatings used during the compliance period, kg.

$Vol_{c,i}$ = total volume of coating, i, used during the compliance period, liters.

$D_{c,i}$ = density of coating, i, kg coating per liter coating.

$W_{c,i}$ = mass fraction of organic HAP in coating, i, kg organic HAP per kg coating.

m = number of different coatings used during the compliance period.

(2) Calculate the kg of organic HAP in the thinners used during the compliance period, using Equation 1B of this section:

$$B = \sum_{j=i}^{n} \left(Vol_{t,j}\right)\left(D_{t,j}\right)\left(W_{t,j}\right) \qquad \text{(Eq. 1B)}$$

Where:

B = total mass or organic HAP in the thinners used during the compliance period, kg.

$Vol_{t,j}$ = total volume of thinner, j, used during the compliance period, liters.

$D_{t,j}$ = density of thinner, j, kg thinner per liter thinner.

$W_{t,j}$ = mass fraction of organic HAP in thinner, j, kg organic HAP per kg thinner.

n = number of different thinners used during the compliance period.

(3) Calculate the kg organic HAP in the cleaning materials used during the compliance period, using Equation 1C of this section:

$$C = \sum_{k=1}^{P} \left(Vol_{s,k}\right)\left(D_{s,k}\right)\left(W_{s,k}\right) \qquad \text{(Eq. 1C)}$$

Where:

C = total mass of organic HAP in the cleaning materials used during the compliance period, kg.

$Vol_{s,k}$ = total volume of cleaning material, k, used during the compliance period, liters.

$D_{s,k}$ = density of cleaning material, k, kg cleaning material per liter cleaning material.

$W_{s,k}$ = mass fraction of organic HAP in cleaning material, k, kg organic HAP per kg material.

p = number of different cleaning materials used during the compliance period.

(4) Determine the mass of organic HAP contained in waste materials sent to a TSDF. If you choose to account for the mass of organic HAP contained in waste materials sent or designated for shipment to a hazardous waste TSDF in the calculation of the mass of organic HAP emissions (Equation 1 of this section), then you must determine it according to paragraphs (e)(4)(i) through (v) of this section.

(i) You may include in the determination of organic HAP in waste materials only the waste materials that are generated by coating operations for which you use Equation 1 of this section and that will be treated or disposed of by a facility that is regulated as a TSDF under 40 CFR part 262, 264, 265, or 266. The TSDF may be either off-site or on-site. You may not include

sfrattini on LAPJZKW1R2 with $$_JOB
VerDate Sep<11>2014 09:16 Apr 04, 2023 Jkt 256165 PO 00000 Frm 00825 Fmt 8010 Sfmt 8010 Q:\40\256165.XXX PC31
ER23JY02.000</GPH> ER23JY02.001</GPH> ER23JY02.002</GPH> ER23JY02.003</GPH>

in the determination the organic HAP contained in wastewater.

(ii) You must determine either the amount of waste materials sent to a TSDF during the compliance period or the amount collected and stored during the compliance period and designated for future transport to a TSDF. Do not include in your determination any waste materials sent to a TSDF during a compliance period if you have already included them in the amount collected and stored during that compliance period or a previous compliance period.

(iii) Determine the total mass of organic HAP contained in the waste materials specified in paragraph (e)(4)(ii) of this section.

(iv) You must document your methodology to determine the amount of waste materials and the total mass of organic HAP they contain, as required in § 63.4130(h).

(v) To the extent that waste manifests include this information, they may be used as part of the documentation of the amount of waste materials and mass of organic HAP contained in them.

(f) *Calculate the total volume of coating solids used during the compliance period.* Determine the total volume of coating solids used, liters, which is the combined volume of coating solids for all of the coatings used during the compliance period, using Equation 2 of this section.

$$V_{st} = \sum_{i=1}^{m} \left(Vol_{c,i}\right)\left(V_{s,i}\right) \qquad \text{(Eq. 2)}$$

Where:

V_{st} = total volume of coating solids used during the compliance period, liters.

$Vol_{c,i}$ = total volume of coating, i, used during the compliance period, liters.

$V_{s,i}$ = volume fraction of coating solids for coating, i, liters solids per liter coating, determined according to § 63.4141(b).

m = number of coatings used during the compliance period.

(g) Calculate the organic HAP emission rate, kg organic HAP per liter coating solids used, using Equation 3 of this section:

$$H_{avg} = \frac{H_e}{V_{st}} \qquad \text{(Eq. 3)}$$

Where:

H_{avg} = organic HAP emission rate for the compliance period, kg organic HAP per liter coating solids.

H_e = total mass organic HAP emissions from all materials used during the compliance period, kg, as calculated by Equation 1 of this section.

V_{st} = total volume coating solids used during the compliance period, liters, as calculated by Equation 2 of this section.

(h) The organic HAP emission rate for the initial compliance period must be less than or equal to the applicable emission limit in § 63.4090. You must keep all records as required by §§ 63.4130 and 63.4131. As part of the Notification of Compliance Status required by § 63.4110, you must identify the coating operation(s) for which you used the emission rate without add-on controls option and, if there were no deviations from the emission limitations, submit a statement that the coating operation(s) was (were) in compliance with the emission limitations during the initial compliance period because the organic HAP emission rate was less than or equal to the applicable emission limit in § 63.4090.

[67 FR 48262, July 23, 2002, as amended at 84 FR 9616, Mar. 15, 2019]

§ 63.4152 How do I demonstrate continuous compliance with the emission limitations?

(a) To demonstrate continuous compliance, for the compliance period, the organic HAP emission rate determined according to § 63.4151(a) through (g) must be less than or equal to the applicable emission limit in § 63.4090. Each month following the initial compliance period described in § 63.4150 is a compliance period.

(b) If the organic HAP emission rate for any compliance period exceeded the applicable emission limit in § 63.4090, this is a deviation from the emission limitations for that compliance period and must be reported as specified in §§ 63.4110(b)(6) and 63.4120(e).

(c) As part of each semiannual compliance report required by § 63.4120, if there were no deviations from the emission limitations, you must submit

sfrattini on LAPJZKW1R2 with $$_JOB
VerDate Sep<11>2014 09:16 Apr 04, 2023 Jkt 256165 PO 00000 Frm 00826 Fmt 8010 Sfmt 8010 Q:\40\256165.XXX PC31
ER23JY02.004</GPH> ER23JY02.005</GPH>

a statement that you were in compliance with the emission limitations during the reporting period because, during the compliance period, the organic HAP emission rate was less than or equal to the applicable emission limit in §63.4090.

(d) You must maintain records as specified in §§63.4130 and 63.4131.

[67 FR 48262, July 23, 2002, as amended at 84 FR 9616, Mar. 15, 2019]

COMPLIANCE REQUIREMENTS FOR THE EMISSION RATE WITH ADD-ON CONTROLS OPTION

§63.4160 By what date must I conduct initial performance tests and other initial compliance demonstrations?

(a) *Existing affected sources.* For an existing affected source, you must meet the requirements of paragraphs (a)(1) through (3) of this section.

(1) All emission capture systems, add-on control devices, and CPMS you use to demonstrate compliance must be installed and operating no later than the applicable compliance date specified in §63.4083. Except for solvent recovery systems for which you conduct liquid-liquid material balances according to §63.4161(h), you must conduct a performance test of each capture system and add-on control device according to the procedures in §§63.4164, 63.4165, and 63.4166, and establish the operating limits required by §63.4092 no later than the compliance date specified in §63.4083. For a solvent recovery system for which you conduct liquid-liquid material balances according to §63.4161(h), you must initiate the first material balance no later than the compliance date specified in §63.4083.

(2) You must develop and begin implementing the work practice plan required by §63.4093 no later than the compliance date specified in §63.4083.

(3) You must complete the compliance demonstration for the initial compliance period according to the requirements of §63.4161. The initial compliance period begins on the applicable compliance date specified in §63.4083 and ends on the last day of the first full month after the compliance date. If the compliance date occurs on any day other than the first day of a month, then the initial compliance period extends through the end of that month plus the next month. The initial compliance demonstration includes the results of emission capture system and add-on control device performance tests conducted according to §§63.4164, 63.4165, and 63.4166; results of liquid-liquid material balances conducted according to §63.4161(h); calculations according to §63.4161 and supporting documentation showing that, during the initial compliance period, the organic HAP emission rate was equal to or less than the emission limit in §63.4090(a); the operating limits established during the performance tests and the results of the continuous parameter monitoring required by §63.4168; and documentation of whether you developed and implemented the work practice plan required by §63.4093.

(b) *New and reconstructed affected sources.* For a new or reconstructed affected source, you must meet the requirements of paragraphs (b)(1) through (4) this section.

(1) All emission capture systems, add-on control devices, and CPMS you use to demonstrate compliance must be installed and operating no later than the applicable compliance date specified in §63.4083. Except for solvent recovery systems for which you conduct liquid-liquid material balances according to §63.4161(h), you must conduct a performance test of each capture system and add-on control device according to the procedures in §§63.4164, 63.4165, and 63.4166, and establish the operating limits required by §63.4092 no later than 180 days after the applicable compliance date specified in §63.4083. For a solvent recovery system for which you conduct liquid-liquid material balances according to §63.4161(h), you must initiate the first material balance no later than 180 days after the applicable compliance date specified in §63.4083.

(2) You must develop and begin implementing the work practice plan required by §63.4093 no later than the compliance date specified in §63.4083.

(3) You must complete the compliance demonstration for the initial compliance period according to the requirements of §63.4161. The initial compliance period begins on the applicable compliance date specified in §63.4083

sfrattini on LAPJZKW1R2 with $$_JOB
VerDate Sep<11>2014 09:16 Apr 04, 2023 Jkt 256165 PO 00000 Frm 00827 Fmt 8010 Sfmt 8010 Q:\40\256165.XXX PC31

and ends on the last day of the first full month after the compliance date, or the date you conduct the performance tests of the emission capture systems and add-on control devices, or initiate the first liquid-liquid material balance for a solvent recovery system; whichever is later. The initial compliance demonstration includes the results of emission capture system and add-on control device performance tests conducted according to §§ 63.4164, 63.4165, and 63.4166; results of liquid-liquid material balances conducted according to § 63.4161(h); calculations according to § 63.4161 and supporting documentation showing that, during the initial compliance period, the organic HAP emission rate was equal to or less than the emission limit in § 63.4090(b); the operating limits established during the performance tests and the results of the continuous parameter monitoring required by § 63.4168; and documentation of whether you developed and implemented the work practice plan required by § 63.4093.

(4) You do not need to comply with the operating limits for the emission capture system and add-on control device required by § 63.4092 until after you have completed the performance tests specified in paragraph (b)(1) of this section. Instead, you must maintain a log detailing the operation and maintenance of the emission capture system, add-on control device, and continuous parameter monitors during the period between the compliance date and the performance test. You must begin complying with the operating limits for your affected source on the date you complete the performance tests specified in paragraph (b)(1) of this section. This requirement does not apply to solvent recovery systems for which you conduct liquid-liquid material balances according to § 63.4161(h).

[67 FR 48262, July 23, 2002, as amended at 84 FR 9616, Mar. 15, 2019]

§ 63.4161 How do I demonstrate initial compliance?

You may use the emission rate with add-on controls option for any coating operation, for any group of coating operations in the affected source, or for all of the coating operations in the affected source. You may include both controlled and uncontrolled coating operations in a group for which you use this option. You must use either the compliant material option or the emission rate without add-on controls option for any coating operation(s) in the affected source for which you do not use this option. To demonstrate initial compliance, the coating operation(s) for which you use the emission rate with add-on controls option must meet the applicable emission limit in § 63.4090 and the work practice standards required in § 63.4093; and each controlled coating operation must meet the operating limits required in § 63.4092. You must meet all the requirements of this section to demonstrate initial compliance with the emission limitations. When calculating the organic HAP emission rate according to this section, do not include any coatings, thinners, or cleaning materials used on coating operations for which you use the compliant material option or the emission rate without add-on controls option. You do not need to redetermine the mass of organic HAP in coatings, thinners, or cleaning materials that have been reclaimed onsite and reused in the coating operation(s) for which you use the emission rate with add-on controls option.

(a) Except as provided in § 63.4160(b)(4) and except for solvent recovery systems for which you conduct liquid-liquid material balances according to the requirements of § 63.4161(h), you must establish and demonstrate continuous compliance during the initial compliance period with the operating limits required by § 63.4092, using the procedures specified in §§ 63.4167 and 63.4168.

(b) You must develop, implement, and document your implementation of the work practice plan required by § 63.4093 during the initial compliance period as specified in § 63.4130.

(c) You must follow the procedures in paragraphs (d) through (l) of this section to demonstrate compliance with the applicable emission limit in § 63.4090.

(d) *Determine the mass fraction of organic HAP, density, volume used, and volume fraction of coating solids.* Follow the procedures specified in § 63.4151(a)

sfrattini on LAPJZKW1R2 with $$_JOB
VerDate Sep<11>2014 09:16 Apr 04, 2023 Jkt 256165 PO 00000 Frm 00828 Fmt 8010 Sfmt 8010 Q:\40\256165.XXX PC31

through (d) to determine the mass fraction of organic HAP, density, and volume of each coating, thinner, and cleaning material used during the compliance period, and the volume fraction of coating solids for each coating used during the compliance period.

(e) *Calculate the total mass of organic HAP emissions before add-on controls.* Using Equation 1 of §63.4151, calculate the total mass of organic HAP emissions before add-on controls from all coatings, thinners, and cleaning materials used during the compliance period in the coating operation or group of coating operations for which you use the emission rate with add-on controls option.

(f) *Calculate the organic HAP emission reduction for each controlled coating operation.* Determine the mass of organic HAP emissions reduced for each controlled coating operation during the compliance period. The emissions reduction determination quantifies the total organic HAP emissions that pass through the emission capture system and are destroyed or removed by the add-on control device. Use the procedures in paragraph (g) of this section to calculate the mass of organic HAP emissions reduction for each controlled coating operation using an emission capture system and add-on control device other than a solvent recovery system for which you conduct liquid-liquid material balances. For each controlled coating operation using a solvent recovery system for which you conduct a liquid-liquid material balance, use the procedures in paragraph (h) of this section to calculate the organic HAP emissions reduction.

(g) *Calculate the organic HAP emissions reduction for controlled coating operations not using liquid-liquid material balance.* For each controlled coating operation using an emission capture system and add-on control device other than a solvent recovery system for which you conduct liquid-liquid material balances, calculate organic HAP emissions reduction, using Equation 1 of this section, by applying the emission capture system efficiency and add-on control device efficiency to the mass of organic HAP contained in the coatings, thinners, and cleaning materials that are used in the coating operation served by the emission capture system and add-on control device during the compliance period. For any period of time a deviation specified in §63.4163(c) or (d) occurs in the controlled coating operation, you must assume zero efficiency for the emission capture system and add-on control device. For the purposes of completing the compliance calculations, you must treat the materials used during a deviation on a controlled coating operation as if they were used on an uncontrolled coating operation for the time period of the deviation. You must not include those materials in the calculations of organic HAP emissions reduction in Equation 1 of this section.

$$H_c = \left(A_I + B_I + C_I\right)\left(\frac{CE}{100} \times \frac{DRE}{100}\right) \qquad (Eq.\ 1)$$

Where:

H_C = mass of organic HAP emissions reduction for the controlled coating operation during the compliance period, kg.

A_I = total mass of organic HAP in the coatings used in the controlled coating operation, kg, as calculated in Equation 1A of this section.

B_I = total mass of organic HAP in the thinners used in the controlled coating operation, kg, as calculated in Equation 1B of this section.

C_I = total mass of organic HAP in the cleaning materials used in the controlled coating operation during the compliance period, kg, as calculated in Equation 1C of this section.

CE = capture efficiency of the emission capture system vented to the add-on control device, percent. Use the test methods and procedures specified in §§63.4164 and 63.4165 to measure and record capture efficiency.

DRE = organic HAP destruction or removal efficiency of the add-on control device, percent. Use the test methods and procedures in §§63.4164 and 63.4166 to measure

sfrattini on LAPJZKW1R2 with $$_JOB
VerDate Sep<11>2014 09:16 Apr 04, 2023 Jkt 256165 PO 00000 Frm 00829 Fmt 8010 Sfmt 8010 Q:\40\256165.XXX PC31
ER15MR19.000</GPH>

and record the organic HAP destruction or removal efficiency.

(1) Calculate the kg of organic HAP in the coatings used in the controlled coating operation, using Equation 1A of this section:

$$A_I = \sum_{i=1}^{m} \left(Vol_{c,i}\right)\left(D_{c,i}\right)\left(W_{c,i}\right) \qquad \text{(Eq. 1A)}$$

Where:

A_I = mass of organic HAP in the coatings used in the controlled coating operation, kg.

$Vol_{c,i}$ = total volume of coating, i, used, liters.

$D_{c,i}$ = density of coating, i, kg per liter.

$W_{c,i}$ = mass fraction of organic HAP in coating, i, kg per kg.

m = number of different coatings used.

(2) Calculate the kg of organic HAP in the thinners used in the controlled coating operation, using Equation 1B of this section:

$$B_I = \sum_{j=1}^{n} \left(Vol_{t,j}\right)\left(D_{t,j}\right)\left(W_{t,j}\right) \qquad \text{(Eq. 1B)}$$

Where:

B_I = mass of organic HAP in the thinners used in the controlled coating operation, kg.

$Vol_{t,j}$ = total volume of thinner, j, used, liters.

$D_{t,j}$ = density of thinner, j, kg per liter.

$W_{t,j}$ = mass fraction of organic HAP in thinner, j, kg per kg.

n = number of different thinners used.

(3) Calculate the kg of organic HAP in the cleaning materials used in the controlled coating operation during the compliance period, using Equation 1C of this section:

$$C_I = \sum_{k=1}^{P} \left(Vol_{s,k}\right)\left(D_{s,k}\right)\left(W_{s,k}\right) \qquad \text{(Eq. 1C)}$$

Where:

C_I = mass of organic HAP in the cleaning materials used in the controlled coating operation, kg.

$Vol_{s,k}$ = total volume of cleaning material, k, used, liters.

$D_{s,k}$ = density of cleaning material, k, kg per liter.

$W_{s,k}$ = mass fraction of organic HAP in cleaning material, k, kg per kg.

p = number of different cleaning materials used.

(h) *Calculate the organic HAP emissions reduction for controlled coating operations using liquid-liquid material balance.* For each controlled coating operation using a solvent recovery system for which you conduct liquid-liquid material balances, calculate the organic HAP emissions reduction by applying the volatile organic matter collection and recovery efficiency to the mass of organic HAP contained in the coatings, thinners, and cleaning materials that are used in the coating operation controlled by the solvent recovery system during the compliance period. Perform a liquid-liquid material balance for each compliance period as specified in paragraphs (h)(1) through (6) of this section. Calculate the mass of organic HAP emission reduction by the solvent recovery system as specified in paragraph (h)(7) of this section.

(1) For each solvent recovery system, install, calibrate, maintain, and operate according to the manufacturer's specifications, a device that indicates the cumulative amount of volatile organic matter recovered by the solvent recovery system each compliance period. The device must be initially certified by the manufacturer to be accurate to within ±2.0 percent of the mass of volatile organic matter recovered.

(2) For each solvent recovery system, determine the mass of volatile organic matter recovered for the compliance period, kg, based on measurement with the device required in paragraph (h)(1) of this section.

(3) Determine the mass fraction of volatile organic matter for each coating used in the coating operation controlled by the solvent recovery system during the compliance period, kg volatile organic matter per kg coating. You may determine the volatile organic matter mass fraction using Method 24 in appendix A–7 of part 60, ASTM D2369–10 (R2015), ''Test Method for Volatile Content of Coatings'' (incorporated by reference, *see* § 63.14), or an EPA approved alternative method. Alternatively, you may use information provided by the manufacturer or supplier of the coating. In the event of any inconsistency between information provided by the manufacturer or supplier and the results of Method 24, ASTM D2369–10 (R2015), or an approved

sfrattini on LAPJZKW1R2 with $$_JOB
VerDate Sep<11>2014 09:16 Apr 04, 2023 Jkt 256165 PO 00000 Frm 00830 Fmt 8010 Sfmt 8010 Q:\40\256165.XXX PC31
ER23JY02.007</MATH> ER23JY02.008</MATH> ER23JY02.009</MATH>

alternative method, the test method results will govern.

(4) Determine the density of each coating, thinner, and cleaning material used in the coating operation controlled by the solvent recovery system during the compliance period, kg per liter, according to §63.4151(c).

(5) Measure the volume of each coating, thinner, and cleaning material used in the coating operation controlled by the solvent recovery system during the compliance period, liters.

(6) Calculate the solvent recovery system's volatile organic matter collection and recovery efficiency, using Equation 2 of this section:

$$R_v = 100 \frac{M_{VR}}{\sum_{i=1}^{m} Vol_i D_i C_{Vi} + \sum_{j=1}^{n} Vol_j D_j + \sum_{k=1}^{p} Vol_k D_k} \quad \text{(Eq. 2)}$$

Where:

R_V = volatile organic matter collection and recovery efficiency of the solvent recovery system during the compliance period, percent.

M_{VR} = mass of volatile organic matter recovered by the solvent recovery system during the compliance period, kg.

Vol_i = volume of coating, i, used in the coating operation controlled by the solvent recovery system during the compliance period, liters.

D_i = density of coating, i, kg coating per liter coating.

C_{Vi} = mass fraction of volatile organic matter for coating, i, kg volatile organic matter per kg coating.

Vol_j = volume of thinner, j, used in the coating operation controlled by the solvent recovery system during the compliance period, liters.

D_j = density of thinner, j, kg thinner per liter thinner.

Vol_k = volume of cleaning material, k, used in the coating operation controlled by the solvent recovery system during the compliance period, liters.

D_k = density of cleaning material, k, kg cleaning material per liter cleaning material

m = number of different coatings used in the coating operation controlled by the solvent recovery system during the compliance period.

n = number of different thinners used in the coating operation controlled by the solvent recovery system during the compliance period.

p = number of different cleaning materials used in the coating operation controlled by the solvent recovery system during the compliance period.

(7) Calculate the mass of organic HAP emissions reduction for the coating operation controlled by the solvent recovery system during the compliance period, using Equation 3 of this section:

$$H_{CSR} = \left(A_I + B_I + C_I\right)\left(\frac{R_V}{100}\right) \quad \text{(Eq. 3)}$$

Where:

H_{CSR} = mass of organic HAP emissions reduction for the coating operation controlled by the solvent recovery system using a liquid-liquid material balance during the compliance period, kg.

A_I = total mass of organic HAP in the coatings used in the coating operation controlled by the solvent recovery system, kg, calculated using Equation 1A of this section.

B_I = total mass of organic HAP in the thinners used in the coating operation controlled by the solvent recovery system, kg, calculated using Equation 1B of this section.

C_I = total mass of organic HAP in the cleaning materials used in the coating operation controlled by the solvent recovery system, kg, calculated using Equation 1C of this section.

R_V = volatile organic matter collection and recovery efficiency of the solvent recovery system, percent, from Equation 2 of this section.

(i) [Reserved]

(j) *Calculate the total volume of coating solids used.* Determine the total volume of coating solids used, liters, which is the combined volume of coating solids for all the coatings used during the compliance period, using Equation 2 of §63.4151.

(k) *Calculate the organic HAP emission rate.* Determine the organic HAP emission rate to the atmosphere, kg organic

sfrattini on LAPJZKW1R2 with $$_JOB
VerDate Sep<11>2014 09:16 Apr 04, 2023 Jkt 256165 PO 00000 Frm 00831 Fmt 8010 Sfmt 8010 Q:\40\256165.XXX PC31
ER23JY02.010</MATH> ER23JY02.011</MATH>

HAP per liter coating solids used during the compliance period, using Equation 4 of this section.

$$H_{HAP} = \frac{H_e - \sum_{i=1}^{q}\left(H_{C,i}\right) - \sum_{j=1}^{r}\left(H_{CSR,j}\right)}{V_{st}} \qquad \text{(Eq. 4)}$$

Where:

H_{HAP} = organic HAP emission rate to the atmosphere during the compliance period, kg organic HAP per liter coating solids used.

H_e = total mass of organic HAP emissions before add-on controls from all the coatings, thinners, and cleaning materials used during the compliance period, kg, determined according to paragraph (e) of this section.

$H_{C,i}$ = total mass of organic HAP emissions reduction for controlled coating operation, i, during the compliance period, kg, from Equation 1 of this section.

$H_{CSR,j}$ = total mass of organic HAP emissions reduction for controlled coating operation, j, during the compliance period, kg, from Equation 3 of this section.

V_{st} = total volume of coating solids used during the compliance period, liters, from Equation 2 of § 63.4151.

q = number of controlled coating operations except those controlled with a solvent recovery system.

r = number of coating operations controlled with a solvent recovery system.

(l) To demonstrate initial compliance with the emission limit, calculated using Equation 4 of this section, must be less than or equal to the applicable emission limit in § 63.4090. You must keep all records as required by §§ 63.4130 and 63.4131. As part of the Notification of Compliance Status required by § 63.4110, you must identify the coating operation(s) for which you used the emission rate with add-on controls option and submit a statement that the coating operation(s) was (were) in compliance with the emission limitations during the initial compliance period because the organic HAP emission rate was less than or equal to the applicable emission limit in § 63.4090, and you achieved the operating limits required by § 63.4092 and the work practice standards required by § 63.4093.

[67 FR 48262, July 23, 2002, as amended at 84 FR 9616, Mar. 15, 2019]

§ 63.4162 [Reserved]

§ 63.4163 How do I conduct periodic performance tests and demonstrate continuous compliance with the emission limitations?

(a) To demonstrate continuous compliance with the applicable emission limit in § 63.4090, the organic HAP emission rate for each compliance period determined according to the procedures in § 63.4161 must be equal to or less than the applicable emission limit in § 63.4090. Each month following the initial compliance period described in § 63.4160 is a compliance period.

(b) If the organic HAP emission rate for any compliance period exceeded the applicable emission limit in § 63.4090, this is a deviation from the emission limitation for that compliance period and must be reported as specified in §§ 63.4110(b)(6) and 63.4120(g).

(c) You must demonstrate continuous compliance with each operating limit required by § 63.4092 that applies to you as specified in Table 1 to this subpart, and you must conduct periodic performance tests as specified in paragraph (c)(3) of this section.

(1) If an operating parameter is out of the allowed range specified in Table 1 to this subpart, this is a deviation from the operating limit that must be reported as specified in §§ 63.4110(b)(6) and 63.4120(g).

(2) If an operating parameter deviates from the operating limit specified in Table 1 to this subpart, then you must assume that the emission capture system and add-on control device were achieving zero efficiency during the

sfrattini on LAPJZKW1R2 with $$_JOB
VerDate Sep<11>2014 09:16 Apr 04, 2023 Jkt 256165 PO 00000 Frm 00832 Fmt 8010 Sfmt 8010 Q:\40\256165.XXX PC31
ER23JY02.012</MATH>

time period of the deviation. For the purposes of completing the compliance calculations specified in §63.4161, you must treat the materials used during a deviation on a controlled coating operation as if they were used on an uncontrolled coating operation for the time period of the deviation. You must not include those materials in the calculation of organic HAP emissions reductions in Equation 1 of §63.4161.

(3) Except for solvent recovery systems for which you conduct liquid-liquid material balances according to §63.4161(h), you must conduct according to the procedures in §§63.4164, 63.4165, and 63.4166 periodic performance tests of each capture system and add-on control device used to demonstrate compliance, and you must establish the operating limits required by §63.4092. You must conduct the first periodic performance test and establish the operating limits required by §63.4092 before March 15, 2022, unless you are already required to complete periodic performance tests as a requirement of renewing your facility's operating permit under 40 CFR part 70 or 40 CFR part 71 and have conducted a performance test on or after March 15, 2017. Thereafter you must conduct a performance test no later than 5 years following the previous performance test. Operating limits must be confirmed or reestablished during each performance test.

(d) You must meet the requirements for bypass lines in §63.4168(b). If any bypass line is opened and emissions are diverted to the atmosphere when the coating operation is running, this is a deviation that must be reported as specified in §§63.4110(b)(6) and 63.4120(g). For the purposes of completing the compliance calculations specified in §63.4161, you must treat the materials used during a deviation on a controlled coating operation as if they were used on an uncontrolled coating operation for the time period of the deviation. You must not include those materials in the calculation of organic HAP emissions reductions in Equation 1 of §63.4161.

(e) You must demonstrate continuous compliance with the work practice standards in §63.4093. If you did not develop a work practice plan, did not implement the plan, or did not keep the records required by §63.4130(k)(8), this is a deviation from the work practice standards that must be reported as specified in §§63.4110(b)(6) and 63.4120(g).

(f) As part of each semiannual compliance report required in §63.4120, you must submit a statement that you were in compliance with the emission limitations during the reporting period because the organic HAP emission rate for each compliance period was less than or equal to the applicable emission limit in §63.4090, and you achieved the operating limits required by §63.4092 and the work practice standards required by §63.4093 during each compliance period.

(g) [Reseved]

(h) Before September 12, 2019, consistent with §§63.6(e) and 63.7(e)(1), deviations that occur during a period of startup, shutdown, or malfunction of the emission capture system, add-on control device, or coating operation that may affect emission capture or control device efficiency are not violations if you demonstrate to the Administrator's satisfaction that you were operating in accordance with §63.6(e). The Administrator will determine whether deviations that occur during a period of startup, shutdown, or malfunction are violations according to the provisions in §63.6(e). On and after September 12, 2019, as specified in §63.4100(b), at all times, the owner or operator must operate and maintain any affected source, including associated air pollution control equipment and monitoring equipment, in a manner consistent with safety and good air pollution control practices for minimizing emissions, and determination of whether a source is operating in compliance with operation and maintenance requirements will be based on information available to the Administrator.

(i) [Reserved]

(j) You must maintain records as specified in §§63.4130 and 63.4131.

[67 FR 48262, July 23, 2002, as amended at 71 FR 20465, Apr. 20, 2006; 84 FR 9617, Mar. 15, 2019]

sfrattini on LAPJZKW1R2 with $$_JOB
VerDate Sep<11>2014 09:16 Apr 04, 2023 Jkt 256165 PO 00000 Frm 00833 Fmt 8010 Sfmt 8010 Q:\40\256165.XXX PC31

§ 63.4164 What are the general requirements for performance tests?

(a) You must conduct each performance test required by § 63.4160 according to the requirements in this section unless you obtain a waiver of the performance test according to the provisions in § 63.7(h).

(1) *Representative coating operation operating conditions.* You must conduct the performance test under representative operating conditions for the coating operation. Operations during periods of startup, shutdown, or nonoperation do not constitute representative conditions for purposes of conducting a performance test. The owner or operator may not conduct performance tests during periods of malfunction. You must record the process information that is necessary to document operating conditions during the test and explain why the conditions represent normal operation. Upon request, you must make available to the Administrator such records as may be necessary to determine the conditions of performance tests.

(2) *Representative emission capture system and add-on control device operating conditions.* You must conduct the performance test when the emission capture system and add-on control device are operating at a representative flow rate, and the add-on control device is operating at a representative inlet concentration. You must record information that is necessary to document emission capture system and add-on control device operating conditions during the test and explain why the conditions represent normal operation.

(b) You must conduct each performance test of an emission capture system according to the requirements in § 63.4165 and of an add-on control device according to the requirements in § 63.4166.

(c) The performance test to determine add-on control device organic HAP destruction or removal efficiency must consist of three runs as specified in § 63.7(e)(3) and each run must last at least 1 hour.

[67 FR 48262, July 23, 2002, as amended at 84 FR 9617, Mar. 15, 2019]

§ 63.4165 How do I determine the emission capture system efficiency?

You must use the procedures and test methods in this section to determine capture efficiency as part of the performance test required by § 63.4160.

(a) You may assume the capture system efficiency is 100 percent if both of the conditions in paragraphs (a)(1) and (2) of this section are met:

(1) The capture system meets the criteria in Method 204 of appendix M to 40 CFR part 51 for a PTE and directs all the exhaust gases from the enclosure to an add-on control device.

(2) All coatings, thinners, and cleaning materials used in the coating operation are applied within the capture system; coating solvent flash-off and coating, curing, and drying occurs within the capture system and the removal or evaporation of cleaning materials from the surfaces they are applied to occurs within the capture system. For example, this criterion is not met if parts enter the open shop environment when being moved between a spray booth and a curing oven.

(b) If the capture system does not meet both of the criteria in paragraphs (a)(1) and (2) of this section, then you must use one of the three protocols described in paragraphs (c), (d), and (e) of this section to measure capture efficiency. The capture efficiency measurements use TVH capture efficiency as a surrogate for organic HAP capture efficiency. For the protocols in paragraphs (c) and (d) of this section, the capture efficiency measurement must consist of three test runs. Each test run must be at least 3 hours duration or the length of a production run, whichever is longer, up to 8 hours. For the purposes of this test, a production run means the time required for a single part to go from the beginning to the end of production which includes surface preparation activities and drying or curing time.

(c) *Liquid-to-uncaptured-gas protocol using a temporary total enclosure or building enclosure.* The liquid-to-uncaptured-gas protocol compares the mass of liquid TVH in materials used in the coating operation, to the mass of TVH emissions not captured by the

sfrattini on LAPJZKW1R2 with $$_JOB
VerDate Sep<11>2014 09:16 Apr 04, 2023 Jkt 256165 PO 00000 Frm 00834 Fmt 8010 Sfmt 8010 Q:\40\256165.XXX PC31

emission capture system. Use a temporary total enclosure or a building enclosure and the procedures in paragraphs (c)(1) through (6) of this section to measure emission capture system efficiency using the liquid-to-uncaptured-gas protocol.

(1) Either use a building enclosure or construct an enclosure around the coating operation where coatings, thinners, and cleaning materials are applied, and all areas where emissions from these applied coatings and materials subsequently occur, such as flash-off, curing, and drying areas. The areas of the coating operation where capture devices collect emissions for routing to an add-on control device, such as the entrance and exit areas of an oven or spray booth, must also be inside the enclosure. The enclosure must meet the applicable definition of a temporary total enclosure or building enclosure in Method 204 of appendix M to 40 CFR part 51.

(2) Use Method 204A or 204F of appendix M to 40 CFR part 51 to determine the mass fraction of TVH liquid input from each coating, thinner, and cleaning material used in the coating operation during each capture efficiency test run. To make the determination, substitute TVH for each occurrence of the term VOC in the methods.

(3) Use Equation 1 of this section to calculate the total mass of TVH liquid input from all the coatings, thinners, and cleaning materials used in the coating operation during each capture efficiency test run.

$$TVH_{used} = \sum_{i=1}^{n} (TVH_i)(Vol_i)(D_i) \qquad \text{(Eq. 1)}$$

Where:

TVH_{used} = total mass of TVH liquid input from all coatings, thinners, and cleaning materials used in the coating operation during the capture efficiency test run, kg.

TVH_i = mass fraction of TVH in coating, thinner, or cleaning material, i, that is used in the coating operation during the capture efficiency test run, kg TVH per kg material.

Vol_i = total volume of coating, thinner, or cleaning material, i, used in the coating operation during the capture efficiency test run, liters.

D_i = density of coating, thinner, or cleaning material, i, kg material per liter material.

n = number of different coatings, thinners, and cleaning materials used in the coating operation during the capture efficiency test run.

(4) Use Method 204D or E of appendix M to 40 CFR part 51 to measure the total mass, kg, of TVH emissions that are not captured by the emission capture system; they are measured as they exit the temporary total enclosure or building enclosure during each capture efficiency test run. To make the measurement substitute TVH for each occurrence of the term VOC in the methods.

(i) Use Method 204D if the enclosure is a temporary total enclosure.

(ii) Use Method 204E if the enclosure is a building enclosure. During the capture efficiency measurement, all organic compound emitting operations inside the building enclosure, other than the coating operation for which capture efficiency is being determined must be shut down, but all fans and blowers must be operating normally.

(5) For each capture efficiency test run, determine the percent capture efficiency of the emission capture system, using Equation 2 of this section:

$$CE = \frac{(TVH_{used} - TVH_{uncaptured})}{TVH_{used}} \times 100 \qquad \text{(Eq. 2)}$$

sfrattini on LAPJZKW1R2 with $$_JOB
VerDate Sep<11>2014 09:16 Apr 04, 2023 Jkt 256165 PO 00000 Frm 00835 Fmt 8010 Sfmt 8006 Q:\40\256165.XXX PC31
ER23JY02.013</MATH> ER23JY02.014</MATH>

Where:

CE = capture efficiency of the emission capture system vented to the add-on control device, percent.

TVH_{used} = total mass of TVH liquid input used in the coating operation during the capture efficiency test run, kg.

$TVH_{uncaptured}$ = total mass of TVH that is not captured by the emission capture system and that exits from the temporary total enclosure or building enclosure during the capture efficiency test run, kg.

(6) Determine the capture efficiency of the emission capture system as the average of the capture efficiencies measured in the three test runs.

(d) *Gas-to-gas protocol using a temporary total enclosure or a building enclosure.* The gas-to-gas protocol compares the mass of TVH emissions captured by the emission capture system to the mass of TVH emissions not captured. Use a temporary total enclosure or a building enclosure and the procedures in paragraphs (d)(1) through (5) of this section to measure emission capture system efficiency using the gas-to-gas protocol.

(1) Either use a building enclosure or construct an enclosure around the coating operation where coatings, thinners, and cleaning materials are applied and all areas where emissions from these applied coatings and materials subsequently occur such as flash-off, curing, and drying areas. The areas of the coating operation where capture devices collect emissions generated by the coating operation for routing to an add-on control device, such as the entrance and exit areas of an oven or a spray booth, must also be inside the enclosure. The enclosure must meet the applicable definition of a temporary total enclosure or building enclosure in Method 204 of appendix M to 40 CFR part 51.

(2) Use Method 204B or 204C of appendix M to 40 CFR part 51 to measure the total mass, kg, of TVH emissions captured by the emission capture system during each capture efficiency test run as measured at the inlet to the add-on control device. To make the measurement, substitute TVH for each occurrence of the term VOC in the methods.

(i) The sampling points for the Method 204B or 204C measurement must be upstream from the add-on control device and must represent total emissions routed from the capture system and entering the add-on control device.

(ii) If multiple emission streams from the capture system enter the add-on control device without a single common duct, then the emissions entering the add-on control device must be simultaneously measured in each duct, and the total emissions entering the add-on control device must be determined.

(3) Use Method 204D or 204E of appendix M to 40 CFR part 51 to measure the total mass, kg, of TVH emissions that are not captured by the emission capture system; they are measured as they exit the temporary total enclosure or building enclosure during each capture efficiency test run. To make the measurement, substitute TVH for each occurrence of the term VOC in the methods.

(i) Use Method 204D if the enclosure is a temporary total enclosure.

(ii) Use Method 204E if the enclosure is a building enclosure. During the capture efficiency measurement, all organic compound emitting operations inside the building enclosure other than the coating operation for which capture efficiency is being determined must be shut down, but all fans and blowers must be operating normally.

(4) For each capture efficiency test run, determine the percent capture efficiency of the emission capture system, using Equation 3 of this section:

$$CE = \frac{TVH_{captured}}{\left(TVH_{captured} + TVH_{uncaptured}\right)} \times 100 \qquad \text{(Eq. 3)}$$

Where:

CE = capture efficiency of the emission capture system vented to the add-on control device, percent.

sfrattini on LAPJZKW1R2 with $$_JOB
VerDate Sep<11>2014 09:16 Apr 04, 2023 Jkt 256165 PO 00000 Frm 00836 Fmt 8010 Sfmt 8010 Q:\40\256165.XXX PC31
ER23JY02.015</MATH>

$TVH_{captured}$ = total mass of TVH captured by the emission capture system as measured at the inlet to the add-on control device during the emission capture efficiency test run, kg.

$TVH_{uncaptured}$ = total mass of TVH that is not captured by the emission capture system and that exits from the temporary total enclosure or building enclosure during the capture efficiency test run, kg.

(5) Determine the capture efficiency of the emission capture system as the average of the capture efficiencies measured in the three test runs.

(e) *Alternative capture efficiency protocol.* As an alternative to the procedures specified in paragraphs (c) and (d) of this section, you may determine capture efficiency using any other capture efficiency protocol and test methods that satisfy the criteria of either the DQO or LCL approach as described in appendix A to subpart KK of this part.

§63.4166 How do I determine the add-on control device emission destruction or removal efficiency?

(a) For all types of add-on control devices, use the test methods as specified in paragraphs (a)(1) through (5) of this section.

(1) Use Method 1 or 1A in appendix A–1 of part 60, as appropriate, to select sampling sites and velocity traverse points.

(2) Use Method 2, 2A, 2C, 2D, or 2F in appendix A–1, or Method 2G in appendix A–2, of part 60, as appropriate, to measure gas volumetric flow rate.

(3) Use Method 3, 3A, or 3B in appendix A–2 of part 60, as appropriate, for gas analysis to determine dry molecular weight. You may also use as an alternative to Method 3B, the manual method for measuring the oxygen, carbon dioxide, and carbon monoxide content of exhaust gas in ANSI/ASME, PTC 19.10–1981, ''Flue and Exhaust Gas Analyses'' (incorporated by reference, *see* §63.14).

(4) Use Method 4 in appendix A–3 of part 60 to determine stack gas moisture.

(5) Methods for determining gas volumetric flow rate, dry molecular weight, and stack gas moisture must be performed, as applicable, during each test run.

(b) Measure total gaseous organic mass emissions as carbon at the inlet and outlet of the add-on control device simultaneously, using either Method 25 or 25A in appendix A–7 of part 60, as specified in paragraphs (b)(1) through (3) of this section. You must use the same method for both the inlet and outlet measurements. You may use Method 18 in appendix A–6 of part 60 to subtract methane emissions from measured total gaseous organic mass emissions as carbon.

(1) Use Method 25 if the add-on control device is an oxidizer and you expect the total gaseous organic concentration as carbon to be more than 50 parts per million (ppm) at the control device outlet.

(2) Use Method 25A if the add-on control device is an oxidizer and you expect the total gaseous organic concentration as carbon to be 50 ppm or less at the control device outlet.

(3) Use Method 25A if the add-on control device is not an oxidizer.

(c) If two or more add-on control devices are used for the same emission stream, then you must measure emissions at the outlet of each device. For example, if one add-on control device is a concentrator with an outlet for the high-volume, dilute stream that has been treated by the concentrator, and a second add-on control device is an oxidizer with an outlet for the low-volume, concentrated stream that is treated with the oxidizer, you must measure emissions at the outlet of the oxidizer and the high-volume dilute stream outlet of the concentrator.

(d) For each test run, determine the total gaseous organic emissions mass flow rates for the inlet and the outlet of the add-on control device, using Equation 1 of this section. If there is more than one inlet or outlet to the add-on control device, you must calculate the total gaseous organic mass flow rate using Equation 1 of this section for each inlet and each outlet and then total all of the inlet emissions and total all of the outlet emissions.

$$M_f = Q_{sd} C_c [12][0.0416]\left[10^{-6}\right] \quad \text{(Eq. 1)}$$

Where:

M_f = total gaseous organic emissions mass flow rate, kg/per hour (h).

sfrattini on LAPJZKW1R2 with $$_JOB
VerDate Sep<11>2014 09:16 Apr 04, 2023 Jkt 256165 PO 00000 Frm 00837 Fmt 8010 Sfmt 8010 Q:\40\256165.XXX PC31
ER23JY02.016</MATH>

C_c = concentration of organic compounds as carbon in the vent gas, as determined by Method 25 or Method 25A, parts per million by volume (ppmv), dry basis.

Q_{sd} = volumetric flow rate of gases entering or exiting the add-on control device, as determined by Method 2, 2A, 2C, 2D, 2F, or 2G, dry standard cubic meters/hour (dscm/h).

0.0416 = conversion factor for molar volume, kg-moles per cubic meter (mol/m^3) (@ 293 Kelvin (K) and 760 millimeters of mercury (mm Hg)).

(e) For each test run, determine the add-on control device organic emissions destruction or removal efficiency, using Equation 2 of this section.

$$DRE = \frac{M_{fi} - M_{fo}}{M_{fi}} \times 100 \qquad \text{(Eq. 2)}$$

Where:

DRE = add-on control device organic emissions destruction or removal efficiency, percent.

M_{fi} = total gaseous organic emissions mass flow rate at the inlet(s) to the add-on control device, using Equation 1 of this section, kg/h.

M_{fo} = total gaseous organic emissions mass flow rate at the outlet(s) of the add-on control device, using Equation 1 of this section, kg/h.

(f) Determine the emission destruction or removal efficiency of the add-on control device as the average of the efficiencies determined in the three test runs and calculated in Equation 2 of this section.

[67 FR 48262, July 23, 2002, as amended at 84 FR 9617, Mar. 15, 2019]

§ 63.4167 How do I establish the emission capture system and add-on control device operating limits during performance tests?

During the performance tests required by §§ 63.4160 and 63.4163, and described in §§ 63.4164, 63.4165, and 63.4166, you must establish the operating limits required by § 63.4092 according to this section unless you have received approval for alternative monitoring and operating limits under § 63.8(f) as specified in § 63.4092.

(a) *Thermal oxidizers.* If your add-on control device is a thermal oxidizer, establish the operating limits according to paragraphs (a)(1) and (2) of this section.

(1) During the performance test, you must monitor and record the combustion temperature at least once every 15 minutes during each of the three test runs. You must monitor the temperature in the firebox of the thermal oxidizer or immediately downstream of the firebox before any substantial heat exchange occurs.

(2) Use the data collected during the performance test to calculate and record the average combustion temperature maintained during the performance test. This average combustion temperature is the minimum operating limit for your thermal oxidizer.

(b) *Catalytic oxidizers.* If your add-on control device is a catalytic oxidizer, establish the operating limits according to either paragraphs (b)(1) and (2) or paragraphs (b)(3) and (4) of this section.

(1) During the performance test, you must monitor and record the temperature just before the catalyst bed and the temperature difference across the catalyst bed at least once every 15 minutes during each of the three test runs.

(2) Use the data collected during the performance test to calculate and record the average temperature just before the catalyst bed and the average temperature difference across the catalyst bed maintained during the performance test. These are the minimum operating limits for your catalytic oxidizer.

(3) As an alternative to monitoring the temperature difference across the catalyst bed, you may monitor the temperature just before the catalyst bed and implement a site-specific inspection and maintenance plan for your catalytic oxidizer as specified in paragraph (b)(4) of this section. During the performance test, you must monitor and record the temperature just before the catalyst bed at least once every 15 minutes during each of the three test runs. Use the data collected during the performance test to calculate and record the average temperature just before the catalyst bed during the performance test. This is the minimum operating limit for your catalytic oxidizer.

(4) You must develop and implement an inspection and maintenance plan for your catalytic oxidizer(s) for which you

sfrattini on LAPJZKW1R2 with $$_JOB
VerDate Sep<11>2014 09:16 Apr 04, 2023 Jkt 256165 PO 00000 Frm 00838 Fmt 8010 Sfmt 8010 Q:\40\256165.XXX PC31
ER23JY02.017

elect to monitor according to paragraph (b)(3) of this section. The plan must address, at a minimum, the elements specified in paragraphs (b)(4)(i) through (iii) of this section.

(i) Annual sampling and analysis of the catalyst activity (*i.e.*, conversion efficiency) following the manufacturer's or catalyst supplier's recommended procedures.

(ii) Monthly inspection of the oxidizer system including the burner assembly and fuel supply lines for problems and, as necessary, adjusting the equipment to assure proper air-to-fuel mixtures.

(iii) Annual internal and monthly external visual inspection of the catalyst bed to check for channeling, abrasion, and settling. If problems are found, you must take corrective action consistent with the manufacturer's recommendations and conduct a new performance test to determine destruction efficiency according to §63.4166.

(c) *Carbon adsorbers.* If your add-on control device is a carbon absorber, establish the operating limits according to paragraphs (c)(1) and (2) of this section.

(1) You must monitor and record the total regeneration desorbing gas (e.g., steam or nitrogen) mass flow for each regeneration cycle and the carbon bed temperature after each carbon bed regeneration and cooling cycle for the regeneration cycle either immediately preceding or immediately following the performance test.

(2) The operating limits for your carbon absorber are the minimum total desorbing gas mass flow recorded during the regeneration cycle and the maximum carbon bed temperature recorded after the cooling cycle.

(d) *Condensers.* If your add-on control device is a condenser, establish the operating limits according to paragraphs (d)(1) and (2) of this section.

(1) During the performance test, you must monitor and record the condenser outlet (product side) gas temperature at least once every 15 minutes during each of the three test runs.

(2) Use the data collected during the performance test to calculate and record the average condenser outlet (product side) gas temperature maintained during the performance test. This average condenser outlet gas temperature is the maximum operating limit for your condenser.

(e) *Concentrators.* If your add-on control device includes a concentrator, you must establish operating limits for the concentrator according to paragraphs (e)(1) through (4) of this section.

(1) During the performance test, you must monitor and record the desorption concentrate stream gas temperature at least once every 15 minutes during each of the three runs of the performance test.

(2) Use the data collected during the performance test to calculate and record the average temperature. This is the minimum operating limit for the desorption concentrate gas stream temperature.

(3) During the performance test, you must monitor and record the pressure drop of the dilute stream across the concentrator at least once every 15 minutes during each of the three runs of the performance test.

(4) Use the data collected during the performance test to calculate and record the average pressure drop. This is the maximum operating limit for the dilute stream across the concentrator.

(f) *Emission capture system.* For each capture device that is not part of a PTE that meets the criteria of §63.4165(a), establish an operating limit for either the gas volumetric flow rate or duct static pressure as specified in paragraphs (f)(1) and (2) of this section. The operating limit for a PTE is specified in Table 1 to this subpart.

(1) During the capture efficiency determination required by §§63.4160 and 63.4163, and described in §§63.4164 and 63.4165, you must monitor and record either the gas volumetric flow rate or the duct static pressure for each separate capture device in your emission capture system at least once every 15 minutes during each of the three test runs at a point in the duct between the capture device and the add-on control device inlet.

(2) Calculate and record the average gas volumetric flow rate or duct static pressure for the three test runs for each capture device. This average gas volumetric flow rate or duct static

sfrattini on LAPJZKW1R2 with $$_JOB
VerDate Sep<11>2014 09:16 Apr 04, 2023 Jkt 256165 PO 00000 Frm 00839 Fmt 8010 Sfmt 8010 Q:\40\256165.XXX PC31

pressure is the minimum operating limit for that specific capture device.

[67 FR 48262, July 23, 2002, as amended at 84 FR 9618, Mar. 15, 2019]

§ 63.4168 What are the requirements for continuous parameter monitoring system installation, operation, and maintenance?

(a) *General.* You must install, operate, and maintain each CPMS specified in paragraphs (c), (e), (f), and (g) of this section according to paragraphs (a)(1) through (6) of this section. You must install, operate, and maintain each CPMS specified in paragraphs (b) and (d) of this section according to paragraphs (a)(3) through (5) of this section.

(1) The CPMS must complete a minimum of one cycle of operation for each successive 15-minute period. You must have a minimum of four equally spaced successive cycles of CPMS operation in 1 hour.

(2) You must determine the average of all recorded readings for each successive 3-hour period of the emission capture system and add-on control device operation except as specified in paragraph (a)(6) of this section.

(3) You must record the results of each inspection, calibration, and validation check of the CPMS.

(4) You must maintain the CPMS at all times in accordance with § 63.4100(b) and have readily available necessary parts for routine repairs of the monitoring equipment.

(5) Before September 12, 2019, you must operate the CPMS and collect emission capture system and add-on control device parameter data at all times that a controlled coating operation is operating except during monitoring malfunctions, associated repairs, and required quality assurance or control activities (including, if applicable, calibration checks and required zero and span adjustments). On and after September 12, 2019, you must operate the CPMS and collect emission capture system and add-on control device parameter data at all times in accordance with § 63.4100(b).

(6) You must not use emission capture system or add-on control device parameter data recorded during monitoring malfunctions, associated repairs, out-of-control periods, or required quality assurance or control activities when calculating data averages. You must use all the data collected during all other periods in calculating the data averages for determining compliance with the emission capture system and add-on control device operating limits.

(7) A monitoring malfunction is any sudden, infrequent, not reasonably preventable failure of the CPMS to provide valid data. Monitoring failures that are caused in part by poor maintenance or careless operation are not malfunctions. Except for periods of required quality assurance or control activities, any period during which the CPMS fails to operate and record data continuously as required by paragraph (a)(1) of this section, or generates data that cannot be included in calculating averages as specified in paragraph (a)(6) of this section, is a deviation from the monitoring requirements.

(b) *Capture system bypass line.* You must comply with the requirements of paragraphs (a)(3) through (5) and (b)(1) and (2) of this section for each emission capture system that contains bypass lines that could divert emissions away from the add-on control device to the atmosphere.

(1) You must monitor or secure the valve or closure mechanism controlling the bypass line in a nondiverting position in such a way that the valve or closure mechanism cannot be opened without creating a record that the valve was opened. The method used to monitor or secure the valve or closure mechanism must meet one of the requirements specified in paragraphs (b)(1)(i) through (iv) of this section.

(i) *Flow control position indicator.* Install, calibrate, maintain, and operate according to the manufacturer's specifications a flow control position indicator that takes a reading at least once every 15 minutes and provides a record indicating whether the emissions are directed to the add-on control device or diverted from the add-on control device. The time of occurrence and flow control position must be recorded, as well as every time the flow direction is

sfrattini on LAPJZKW1R2 with $$_JOB
VerDate Sep<11>2014 09:16 Apr 04, 2023 Jkt 256165 PO 00000 Frm 00840 Fmt 8010 Sfmt 8010 Q:\40\256165.XXX PC31

changed. The flow control position indicator must be installed at the entrance to any bypass line that could divert the emissions away from the add-on control device to the atmosphere.

(ii) *Car-seal or lock-and-key valve closures.* Secure any bypass line valve in the closed position with a car-seal or a lock-and-key type configuration. You must visually inspect the seal or closure mechanism at least once every month to ensure that the valve is maintained in the closed position and the emissions are not diverted away from the add-on control device to the atmosphere.

(iii) *Valve closure monitoring.* Ensure that any bypass line valve is in the closed (non-diverting) position through monitoring of valve position at least once every 15 minutes. You must inspect the monitoring system at least once every month to verify that the monitor will indicate valve position.

(iv) *Automatic shutdown system.* Use an automatic shutdown system in which the coating operation is stopped when flow is diverted by the bypass line away from the add-on control device to the atmosphere when the coating operation is running. You must inspect the automatic shutdown system at least once every month to verify that it will detect diversions of flow and shutdown the coating operation.

(2) If any bypass line is opened, you must include a description of why the bypass line was opened and the length of time it remained open in the semiannual compliance reports required in §63.4120.

(c) *Thermal oxidizers and catalytic oxidizers.* If you are using a thermal oxidizer or catalytic oxidizer as an add-on control device (including those used with concentrators or with carbon adsorbers to treat desorbed concentrate streams), you must comply with the requirements in paragraphs (a) and (c)(1) through (3) of this section:

(1) For a thermal oxidizer, install a gas temperature monitor in the firebox of the thermal oxidizer or in the duct immediately downstream of the firebox before any substantial heat exchange occurs.

(2) For a catalytic oxidizer, install a gas temperature monitor in the gas stream immediately before the catalyst bed, and if you establish operating limits according to §63.4167(b)(1) and (2), also install a gas temperature monitor in the gas stream immediately after the catalyst bed.

(3) For each gas temperature monitoring device, you must comply with the requirements in paragraphs (c)(3)(i) through (vii) of this section. For the purposes of this paragraph (c)(3), a thermocouple is part of the temperature sensor.

(i) Locate the temperature sensor in a position that provides a representative temperature.

(ii) Use a temperature sensor with a measurement sensitivity of 4 degrees Fahrenheit or 0.75 percent of the temperature value, whichever is larger.

(iii) Shield the temperature sensor system from electromagnetic interference and chemical contaminants.

(iv) If a gas temperature chart recorder is used, it must have a measurement sensitivity in the minor division of at least 20 degrees Fahrenheit.

(v) Perform an electronic calibration at least semiannually according to the procedures in the manufacturer's owner's manual. Following the electronic calibration, you must conduct a temperature sensor validation check in which a second or redundant temperature sensor placed nearby the process temperature sensor must yield a reading within 30 degrees Fahrenheit of the process temperature sensor's reading.

(vi) Any time the sensor exceeds the manufacturer's specified maximum operating temperature range, either conduct calibration and validation checks or install a new temperature sensor.

(vii) At least monthly, inspect components for integrity and electrical connections for continuity, oxidation, and galvanic corrosion.

(d) *Carbon adsorbers.* If you are using a carbon adsorber as an add-on control device, you must monitor the total regeneration desorbing gas (e.g., steam or nitrogen) mass flow for each regeneration cycle, the carbon bed temperature after each regeneration and cooling cycle, and comply with paragraphs (a)(3) through (5) and (d)(1) and (2) of this section.

(1) The regeneration desorbing gas mass flow monitor must be an integrating device having a measurement

sfrattini on LAPJZKW1R2 with $$_JOB
VerDate Sep<11>2014 09:16 Apr 04, 2023 Jkt 256165 PO 00000 Frm 00841 Fmt 8010 Sfmt 8010 Q:\40\256165.XXX PC31

sensitivity of plus or minus 10 percent, capable of recording the total regeneration desorbing gas mass flow for each regeneration cycle.

(2) The carbon bed temperature monitor must have a measurement sensitivity of 1 percent of the temperature recorded or 1 degree Fahrenheit, whichever is greater, and must be capable of recording the temperature within 15 minutes of completing any carbon bed cooling cycle.

(e) *Condensers*. If you are using a condenser, you must monitor the condenser outlet (product side) gas temperature and comply with paragraphs (a) and (e)(1) and (2) of this section.

(1) The gas temperature monitor must have a measurement sensitivity of 1 percent of the temperature recorded or 1 degree Fahrenheit, whichever is greater.

(2) The temperature monitor must provide a gas temperature record at least once every 15 minutes.

(f) *Concentrators*. If you are using a concentrator, such as a zeolite wheel or rotary carbon bed concentrator, you must comply with the requirements in paragraphs (a) and (f)(1) and (2) of this section.

(1) You must install a temperature monitor in the desorption gas stream. The temperature monitor must meet the requirements in paragraphs (a) and (c)(3) of this section.

(2) You must install a device to monitor pressure drop across the zeolite wheel or rotary carbon bed. The pressure monitoring device must meet the requirements in paragraphs (a) and (f)(2)(i) through (vii) of this section.

(i) Locate the pressure sensor(s) in or as close to a position that provides a representative measurement of the pressure.

(ii) Minimize or eliminate pulsating pressure, vibration, and internal and external corrosion.

(iii) Use a gauge with a minimum tolerance of 0.5 inch of water or a transducer with a minimum tolerance of 1 percent of the pressure range.

(iv) Check the pressure tap daily.

(v) Using a manometer, check gauge calibration quarterly and transducer calibration monthly.

(vi) Conduct calibration checks anytime the sensor exceeds the manufacturer's specified maximum operating pressure range or install a new pressure sensor.

(vii) At least monthly, inspect components for integrity, electrical connections for continuity, and mechanical connections for leakage.

(g) *Emission capture systems*. The capture system monitoring system must comply with the requirements in paragraph (a) of this section and the applicable requirements in paragraphs (g)(1) and (2) of this section.

(1) For each flow measurement device, you must meet the requirements in paragraphs (a) and (g)(1)(i) through (iv) of this section.

(i) Locate a flow sensor in a position that provides a representative flow measurement in the duct from each capture device in the emission capture system to the add-on control device.

(ii) Reduce swirling flow or abnormal velocity distributions due to upstream and downstream disturbances.

(iii) Conduct a flow sensor calibration check at least semiannually.

(iv) At least monthly, inspect components for integrity, electrical connections for continuity, and mechanical connections for leakage.

(2) For each pressure drop measurement device, you must comply with the requirements in paragraphs (a) and (g)(2)(i) through (vi) of this section.

(i) Locate the pressure sensor(s) in or as close to a position that provides a representative measurement of the pressure drop across each opening you are monitoring.

(ii) Minimize or eliminate pulsating pressure, vibration, and internal and external corrosion.

(iii) Check pressure tap pluggage daily.

(iv) Using an inclined manometer with a measurement sensitivity of 0.0002 inch water, check gauge calibration quarterly and transducer calibration monthly.

(v) Conduct calibration checks any time the sensor exceeds the manufacturer's specified maximum operating pressure range or install a new pressure sensor.

sfrattini on LAPJZKW1R2 with $$_JOB
VerDate Sep<11>2014 09:16 Apr 04, 2023 Jkt 256165 PO 00000 Frm 00842 Fmt 8010 Sfmt 8010 Q:\40\256165.XXX PC31

(vi) At least monthly, inspect components for integrity, electrical connections for continuity, and mechanical connections for leakage.

[67 FR 48262, July 23, 2002, as amended at 84 FR 9618, Mar. 15, 2019; 85 FR 41149, July 8, 2020]

OTHER REQUIREMENTS AND INFORMATION

§63.4180 Who implements and enforces this subpart?

(a) This subpart can be implemented and enforced by us, the EPA, or a delegated authority such as your State, local, or tribal agency. If the EPA Administrator has delegated authority to your State, local, or tribal agency, then that agency (as well as the EPA) has the authority to implement and enforce this subpart. You should contact your EPA Regional Office to find out if implementation and enforcement of this subpart is delegated to your State, local, or tribal agency.

(b) In delegating implementation and enforcement authority of this subpart to a State, local, or tribal agency under subpart E of this part, the authorities contained in paragraph (c) of this section are retained by the EPA Administrator and are not transferred to the State, local, or tribal agency.

(c) The authorities that will not be delegated to State, local, or tribal agencies are listed in paragraphs (c)(1) through (4) of this section.

(1) Approval of alternatives to the work practice standards in §63.4093 under §63.6(g).

(2) Approval of major alternatives to test methods under §63.7(e)(2)(ii) and (f) and as defined in §63.90.

(3) Approval of major alternatives to monitoring under §63.8(f) and as defined in §63.90.

(4) Approval of major alternatives to recordkeeping and reporting under §63.10(f) and as defined in §63.90.

§63.4181 What definitions apply to this subpart?

Terms used in this subpart are defined in the CAA, in 40 CFR 63.2, the General Provisions of this part, and in this section as follows:

Add-on control device means an air pollution control device, such as a thermal oxidizer or carbon absorber, that reduces pollution in an air stream by destruction or removal before discharge to the atmosphere.

Adhesive means any chemical substance that is applied for the purpose of bonding two surfaces together.

Capture device means a hood, enclosure, room, floor sweep, or other means of containing or collecting emissions and directing those emissions into an add-on control device.

Capture efficiency or *capture system efficiency* means the portion (expressed as a percentage) of the pollutants from an emission source that is delivered to an add-on control device.

Capture system means one or more capture devices intended to collect emissions generated by a coating operation in the use of coatings and cleaning materials, both at the point of application and at subsequent points where emissions from the coatings and cleaning materials occur, such as flashoff, drying, or curing. As used in this subpart, multiple capture devices that collect emissions generated by a coating operation are considered a single capture system.

Cleaning material means a solvent used to remove contaminants and other materials such as dirt, grease, oil, and dried or wet coating (e.g., depainting) from a substrate before or after coating application or from equipment associated with a coating operation such as spray booths, spray guns, racks, tanks, and hangers. Thus, it includes cleaning materials used for substrates or equipment or both.

Coating means a material applied to a substrate for decorative, protective, or functional purposes. For the purposes of this subpart, coatings include paints, porcelain enamels, sealants, caulks, inks, adhesives, and maskants. Decorative, protective, or functional materials that consist only of protective oils, acids, bases, or any combination of these substances are not considered coatings for the purposes of this subpart.

Coating operation means equipment used to apply cleaning materials to a substrate to prepare it for coating application or to remove dried coating (surface preparation), to apply coating to a substrate (coating application) and

sfrattini on LAPJZKW1R2 with $$_JOB
VerDate Sep<11>2014 09:16 Apr 04, 2023 Jkt 256165 PO 00000 Frm 00843 Fmt 8010 Sfmt 8010 Q:\40\256165.XXX PC31

to dry or cure the coating after application, or to clean coating operation equipment (equipment cleaning). A single coating operation may include any combination of these types of equipment but always includes at least the point at which a coating or cleaning material is applied and all subsequent points in the affected source where organic HAP emissions from that coating or cleaning material occur. There may be multiple coating operations in an affected source. Applications of coatings using hand-held, nonrefillable aerosol containers, touchup markers, or marking pens are not coating operations for the purposes of this subpart.

Coating solids means the nonvolatile portion of the coating that makes up the dry film.

Continuous parameter monitoring system means the total equipment that may be required to meet the data acquisition and availability requirements of this subpart used to sample, condition (if applicable), analyze, and provide a record of coating operation, capture system, or add-on control device parameters.

Controlled coating operation means a coating operation from which some or all of the organic HAP emissions are routed through an emission capture system and add-on control device.

Deviation means:

(1) Before September 12, 2019, any instance in which an affected source subject to this subpart or an owner or operator of such a source:

(i) Fails to meet any requirement or obligation established by this subpart including but not limited to any emission limit, or operating limit, or work practice standard;

(ii) Fails to meet any term or condition that is adopted to implement an applicable requirement in this subpart and that is included in the operating permit for any affected source required to obtain such a permit; or

(iii) Fails to meet any emission limit, or operating limit, or work practice standard in this subpart during startup, shutdown, or malfunction regardless of whether or not such failure is permitted by this subpart; and

(2) On and after September 12, 2019, any instance in which an affected source subject to this subpart or an owner or operator of such a source:

(i) Fails to meet any requirement or obligation established by this subpart including but not limited to any emission limit, or operating limit, or work practice standard; or

(ii) Fails to meet any term or condition that is adopted to implement an applicable requirement in this subpart and that is included in the operating permit for any affected source required to obtain such a permit.

Emission limitation means an emission limit, operating limit, or work practice standard.

Enclosure means a structure that surrounds a source of emissions and captures and directs the emissions to an add-on control device.

Exempt compound means a specific compound that is not considered a VOC due to negligible photochemical reactivity. The exempt compounds are listed in 40 CFR 51.100(s).

Facility maintenance means the routine repair or refurbishing (including surface coating) of the tools, equipment, machinery, and structures that comprise the infrastructure of the facility or that are necessary for the facility to function in its intended capacity. It does not mean cleaning of equipment that is part of a large appliances coating operation.

Heat transfer coil means a tube-and-fin assembly used in large appliance products to remove heat from a circulating fluid.

Large appliance part means a component of a large appliance product except for the wider use parts excluded under § 63.4081(d)(1).

Large appliance product means, but is not limited to, any of the following products (except as provided under § 63.4081(d)(3)) manufactured for household, recreational, institutional, commercial, or industrial use:

(1) Cooking equipment (ovens, ranges, and microwave ovens but not including toasters, counter-top grills, and similar small products);

(2) Refrigerators, freezers, and refrigerated cabinets and cases;

(3) Laundry equipment (washers, dryers, drycleaning machines, and pressing machines);

sfrattini on LAPJZKW1R2 with $$_JOB
VerDate Sep<11>2014 09:16 Apr 04, 2023 Jkt 256165 PO 00000 Frm 00844 Fmt 8010 Sfmt 8010 Q:\40\256165.XXX PC31

(4) Dishwashers, trash compactors, and water heaters; and

(5) HVAC units, air-conditioning (except motor vehicle) units, air-conditioning and heating combination units, comfort furnaces, and electric heat pumps.

Specifically excluded are heat transfer coils and large commercial and industrial chillers.

Large commercial and industrial chillers means, for the purposes of this subpart, equipment designed to produce chilled water for use in commercial or industrial HVAC systems.

Manufacturer's formulation data means data on a material (such as a coating) that are supplied by the material manufacturer based on knowledge of the ingredients used to manufacture that material, rather than based on testing of the material with the test methods specified in §63.4141. Manufacturer's formulation data may include, but are not limited to, information on density, organic HAP content, volatile organic matter content, and coating solids content.

Mass fraction of organic HAP means the ratio of the mass of organic HAP to the mass of a material in which it is contained, expressed as kg organic HAP per kg of material.

Month means a calendar month or a pre-specified period of 28 to 35 days to allow for flexibility in recordkeeping when data are based on a business accounting period.

Organic HAP content means the mass of organic HAP per volume of coating solids for a coating, calculated using Equation 2 of §63.4141. The organic HAP content is determined for the coating in the condition it is in when received from its manufacturer or supplier and does not account for any alteration after receipt.

Permanent total enclosure (PTE) means a permanently installed enclosure that meets the criteria of Method 204 of appendix M, 40 CFR part 51, for a PTE and that directs all the exhaust gases from the enclosure to an add-on control device.

Protective oil means an organic material that is applied to a substrate for the purpose of providing lubrication or protection from corrosion without forming a solid film. This definition of protective oils includes, but is not limited to, lubricating oils, evaporative oils (including those that evaporate completely), and extrusion oils.

Research or laboratory facility means a facility whose primary purpose is for research and development of new processes and products conducted under the close supervision of technically trained personnel and is not engaged in the manufacture of final or intermediate products for commercial purposes, except in a de minimis manner.

Responsible official means responsible official as defined in 40 CFR 70.2.

Startup, initial means the first time equipment is brought online in a facility.

Surface preparation means use of a cleaning material on a portion of or all of a substrate including use of cleaning material to remove dried coating which is sometimes called ''depainting.''

Temporary total enclosure means an enclosure constructed for the purpose of measuring the capture efficiency of pollutants emitted from a given source as defined in Method 204 of appendix M, 40 CFR part 51.

Thinner means an organic solvent that is added to a coating after the coating is received from the supplier.

Total volatile hydrocarbon (TVH) means the total amount of nonaqueous volatile organic matter determined according to Methods 204 and 204A through 204F of appendix M to 40 CFR part 51 and substituting the term TVH each place in the methods where the term VOC is used. The TVH includes both VOC and non-VOC.

Uncontrolled coating operation means a coating operation from which no organic HAP emissions are routed through an emission capture system and add-on control device.

Volatile organic compound (VOC) means any compound defined as VOC in 40 CFR 51.100(s).

Volume fraction of coating solids means the ratio of the volume of coating solids (also known as volume of nonvolatiles) to the volume of coating, expressed as liters of coating solids per liter of coating.

Wastewater means water that is generated in a coating operation and is

sfrattini on LAPJZKW1R2 with $$_JOB
VerDate Sep<11>2014 09:16 Apr 04, 2023 Jkt 256165 PO 00000 Frm 00845 Fmt 8010 Sfmt 8010 Q:\40\256165.XXX PC31

collected, stored, or treated prior to being discarded or discharged.

[67 FR 48262, July 23, 2002, as amended at 84 FR 9618, Mar. 15, 2019]

TABLE 1 TO SUBPART NNNN OF PART 63—OPERATING LIMITS IF USING THE EMISSION RATE WITH ADD-ON CONTROLS OPTION

If you are required to comply with operating limits by § 63.4092, you must comply with the applicable operating limits in the following table:

For following device . . .	You must meet the following operating limit . . .	And you must demonstrate continuous compliance with the operating limit by . . .
1. thermal oxidizer	a. the average combustion temperature in any 3-hour period must not fall below the combustion temperature limit established according to § 63.4167(a).	i. collecting the combustion temperature data according to § 63.4168(c); ii. reducing the data to 3-hour block averages; and iii. maintaining the 3-hour average combustion temperature at or above the combustion temperature limit.
2. catalytic oxidizer	a. the average temperature measured just before the catalyst bed in any 3-hour period must not fall below the limit established according to § 63.4167(b); and either.	i. collecting the temperature data according to § 63.4168(c); ii. reducing the data to 3-hour block before the averages; and iii. maintaining the 3-hour average temperature before the catalyst bed at or above the temperature limit.
	b. ensure that average temperature difference across the catalyst bed in any 3-hour period does not fall below the temperature difference limit established according to § 63.4167(b)(2); or.	i. collecting the temperature data according to § 63.4168(c); ii. reducing the data to 3-hour block difference across averages; and iii. maintaining the 3-hour average temperature difference at or above the temperature difference limit.
	c. develop and implement an inspection and maintenance plan according to § 63.4167(b)(4).	i. maintaining an up-to-date inspection and maintenance plan, records of annual catalyst activity checks, records monthly inspections of the oxidizer system, and records of the annual internal inspections of the catalyst bed. If a problem is discovered during a monthly or annual inspection required by § 63.4167(b)(4), you must take corrective action as soon as practicable consistent with the manufacturer's recommendations.
3. carbon adsorber	a. the total regeneration desorbing gas (e.g., steam or nitrogen) mass flow for each carbon bed regeneration cycle must not fall below the total regeneration desorbing gas mass flow limit established according to § 63.4167(c).	i. measuring the total regeneration desorbing gas (e.g., steam or nitrogen) mass flow for each regeneration cycle according to § 63.4168(d); and ii. maintaining the total regeneration desorbing gas mass flow at or above the mass flow limit.
	b. the temperature of the carbon bed, after completing each regeneration and any cooling cycle, must not exceed the carbon bed temperature limit established according to § 63.4167(c).	i. measuring the temperature of the carbon bed after completing each regeneration and any cooling cycle according to § 63.4168(d); and ii. operating the carbon beds such that each carbon bed is not returned to service until the recorded temperature of the carbon bed is at or below the temperature limit.
4. condenser	a. the average condenser outlet (product side) gas temperature in any 3-hour period must not exceed the temperature limit established according to § 63.4167(d).	i. collecting the condenser outlet (product side) gas temperature according to § 63.4168(e); ii. reducing the data to 3-hour block averages; and iii. maintaining the 3-hour average gas exceed the temperature at the outlet at or below the temperature limit.
5. concentrators, including zeolite wheels and rotary carbon adsorbers.	a. the average gas temperature of the desorption concentrate stream in any 3-hour period must not fall below the limit established according to § 63.4167(e).	i. collecting the temperature data according to 63.4168(f); ii. reducing the data to 3-hour block averaged; and iii. maintaining the 3-hour average temperature at or above the temperature limit.

sfrattini on LAPJZKW1R2 with $$_JOB
VerDate Sep<11>2014 09:16 Apr 04, 2023 Jkt 256165 PO 00000 Frm 00846 Fmt 8010 Sfmt 8002 Q:\40\256165.XXX PC31

For following device . . .	You must meet the following operating limit . . .	And you must demonstrate continuous compliance with the operating limit by . . .
	b. the average pressure drop of the dilute stream across the concentrator in any 3-hour period must not fall below the limit established according to § 63.4167(e).	i. collecting the pressure drop data according to 63.4168(f); and ii. reducing the pressure drop data to across the 3-hour block averages; and iii. maintaining the 3-hour average pressure drop at or above the pressure drop limit.
6. emission capture system that is a PTE according to § 63.4165(a).	a. the direction of the air flow at all times must be into the enclosure; and either.	i. collecting the direction of air flow, and either the facial velocity of air through all natural draft openings according to § 63.4168(g)(1) or the pressure drop across the enclosure according to § 63.4168(g)(2); and ii. maintaining the facial velocity of air flow through all natural draft openings or the pressure drop at or above the facial velocity limit or pressure drop limit, and maintaining the direction of air flow into the enclosure at all times.
	b. the average facial velocity of air through all natural draft openings in the enclosure must be at least 200 feet per minute; or.	See item 6.a. of this table.
	c. the pressure drop across the enclosure must be at least 0.007 inch H2O, as established in Method 204 of appendix M to 40 CFR part 51.	See item 6.a. of this table.
7. emission capture system that is not a PTE according to § 63.4165(a).	a. the average gas volumetric flow rate or duct static pressure in each duct between a capture device and add-on control device inlet in any 3-hour period must not fall below the average volumetric flow rate or duct static pressure limit established for that capture device according to § 63.4167(f).	i. collecting the gas volumetric flow rate or duct static pressure for each capture device according to § 63.4168(g); ii. reducing the data to 3-hour block averages; and iii. maintaining the 3-hour average gas volumetric flow rate or duct static pressure for each capture device at or above the gas volumetric flow rate or duct static pressure limit.

Table 2 to Subpart NNNN of Part 63—Applicability of General Provisions to Subpart NNNN

[You must comply with the applicable General Provisions requirements according to the following table:]

Citation	Subject	Applicable to subpart NNNN	Explanation
§ 63.1(a)(1)–(12)	General Applicability	Yes.	
§ 63.1(b)(1)–(3)	Initial Applicability Determination	Yes	Applicability to subpart NNNN is also specified in § 63.4081.
§ 63.1(c)(1)	Applicability After Standard Established.	Yes.	
§ 63.1(c)(2)–(3)	Applicability of Permit Program for Area Sources.	No	Area sources are not subject to subpart NNNN.
§ 63.1(c)(4)–(5)	Extensions and Notifications	Yes.	
§ 63.1(c)(6)	Reclassification	Yes.	
§ 63.1(e)	Applicability of Permit Program Before Relevant Standard is Set.	Yes.	
§ 63.2	Definitions	Yes	Additional definitions are specified in § 63.4181.
§ 63.3(a)–(c)	Units and Abbreviations	Yes.	
§ 63.4(a)(1)–(5)	Prohibited Activities	Yes.	
§ 63.4(b)–(c)	Circumvention/Severability	Yes.	
§ 63.5(a)	Construction/Reconstruction	Yes.	
§ 63.5(b)(1)–(6)	Requirements for Existing, Newly Constructed, and Reconstructed Sources.	Yes.	
§ 63.5(d)	Application for Approval of Construction/Reconstruction.	Yes.	
§ 63.5(e)	Approval of Construction/Reconstruction.	Yes.	
§ 63.5(f)	Approval of Construction/Reconstruction Based on Prior State Review.	Yes.	
§ 63.6(a)	Compliance With Standards and Maintenance Requirements—Applicability.	Yes.	

sfrattini on LAPJZKW1R2 with $$_JOB
VerDate Sep<11>2014 09:16 Apr 04, 2023 Jkt 256165 PO 00000 Frm 00847 Fmt 8010 Sfmt 8002 Q:\40\256165.XXX PC31

[You must comply with the applicable General Provisions requirements according to the following table:]

Citation	Subject	Applicable to subpart NNNN	Explanation
§ 63.6(b)(1)–(7)	Compliance Dates for New and Reconstructed Sources.	Yes	Section 63.4083 specifies the compliance dates.
§ 63.6(c)(1)–(5)	Compliance Dates for Existing Sources.	Yes	Section 63.4083 specifies the compliance dates.
§ 63.6(e)(1)(i)	Operation and Maintenance	Yes, before September 12, 2019. No on and after September 12, 2019.	*See* § 63.4100(b) for general duty requirement.
§ 63.6(e)(1)(ii)	Operation and Maintenance	Yes, before September 12, 2019. No on and after September 12, 2019.	
§ 63.6(e)(1)(iii)	Operation and Maintenance	Yes.	
§ 63.6(e)(3)	Startup, shutdown, malfunction plan (SSMP).	Yes, before September 12, 2019. No on and after September 12, 2019.	
§ 63.6(f)(1)	Compliance Except During Startup, Shutdown, and Malfunction.	Yes, before September 12, 2019. No on and after September 12, 2019.	
§ 63.6(f)(2)–(3)	Methods for Determining Compliance.	Yes.	
§ 63.6(g)(1)–(3)	Use of an Alternative Standard	Yes.	
§ 63.6(h)	Compliance With Opacity/Visible Emission standards.	No	Subpart NNNN does not establish opacity standards and does not require continuous opacity monitoring systems (COMS).
§ 63.6(i)(1)–(16)	Extension of Compliance	Yes.	
§ 63.6(j)	Presidential Compliance Exemption.	Yes.	
§ 63.7(a)(1)	Performance Test Requirements—Applicability.	Yes	Applies to all affected sources. Additional requirements for performance testing are specified in §§ 63.4164, 63.4165, and 63.4166.
§ 63.7(a)(2)	Performance Test Requirements—Dates.	Yes	Applies only to performance tests for capture system and control device efficiency at sources using these to comply with the standards. Section 63.4160specifies the schedule for performance test requirements that are earlier than those specified in § 63.7(a)(2).
§ 63.7(a)(3)	Performance Tests Required By the Administrator.	Yes.	
§ 63.7(b)–(d)	Performance Test Requirements—Notification, Quality Assurance Facilities Necessary for Safe Testing, Conditions During Test.	Yes	Applies only to performance tests for capture system and add-on control device efficiency at sources using these to comply with the standard.
§ 63.7(e)(1)	Conduct of performance tests	Yes, before September 12, 2019. No on and after September 12, 2019.	*See* § 63.4164(a)(1).
§ 63.7(e)(2)–(4)	Conduct of performance tests	Yes.	
§ 63.7(f)	Performance Test Requirements—Use of Alternative Test Method.	Yes	Applies to all test methods except those used to determine capture system efficiency.
§ 63.7(g)–(h)	Performance Test Requirements—Data Analysis, Recordkeeping, Reporting, Waiver of Test.	Yes	Applies only to performance tests for capture system and add-on control device efficiency at sources using these to comply with the standard.

sfrattini on LAPJZKW1R2 with $$_JOB
VerDate Sep<11>2014 09:16 Apr 04, 2023 Jkt 256165 PO 00000 Frm 00848 Fmt 8010 Sfmt 8002 Q:\40\256165.XXX PC31

[You must comply with the applicable General Provisions requirements according to the following table:]

Citation	Subject	Applicable to subpart NNNN	Explanation
§ 63.8(a)(1)–(3)	Monitoring Requirements—Applicability.	Yes	Applies only to monitoring of capture system and add-on control device efficiency at sources using these to comply with the standard. Additional requirementsfor monitoring are specified in § 63.4168.
§ 63.8(a)(4)	Additional Monitoring Requirements.	No	Subpart NNNN does not have monitoring requirements for flares.
§ 63.8(b)	Conduct of Monitoring	Yes.	
§ 63.8(c)(1)	Continuous Monitoring Systems (CMS) Operation and Maintenance.	Yes, before September 12, 2019. No on and after September 12, 2019.	
§ 63.8(c)(2)–(3)	Continuous Monitoring Systems (CMS) Operation and Maintenance.	Yes	Applies only to monitoring of capture system and add-on control device efficiency at sources using these to comply with the standard. Additional requirementsfor CMS operations and maintenance are specified in § 63.4168.
§ 63.8(c)(4)	CMS	No	Section 63.4168 specifies the requirements for the operation of CMS for capture systems and add-on control devices at sources using these to comply.
§ 63.8(c)(5)	COMS	No	Subpart NNNN does not have opacity or visible emission standards.
§ 63.8(c)(6)	CMS Requirements	No	Section 63.4168 specifies the requirements for monitoring systems for capture systems and add-on control devices at sources using these to comply.
§ 63.8(c)(7)	CMS Out-of-Control Periods	Yes.	
§ 63.8(c)(8)	CMS Out-of-Control Periods and Reporting.	No	Section 63.4120 requires reporting of CMS out-of-control periods.
§ 63.8(d)–(e)	Quality Control Program and CMS Performance Evaluation.	No	Subpart NNNN does not require the use of CEMS.
§ 63.8(f)(1)–(5)	Use of an Alternative Monitoring Method.	Yes.	
§ 63.8(f)(6)	Alternative to Relative Accuracy Test.	No	Subpart NNNN does not require the use of CEMS.
§ 63.8(g)(1)–(5)	Data Reduction	No	Sections 63.4167 and 63.4168 specify monitoring data reduction.
§ 63.9(a)–(d)	Notification Requirements	Yes.	
§ 63.9(e)	Notification of Performance Test	Yes	Applies only to capture system and add-on control device performance tests at sources using these to comply with the standard.
§ 63.9(f)	Notification of Visible Emissions/Opacity Test.	No	Subpart NNNN does not have opacity or visible emission standards.
§ 63.9(g)(1)–(3)	Additional Notifications When Using CMS.	No	Subpart NNNN does not require the use of CEMS.
§ 63.9(h)	Notification of Compliance Status	Yes	Section 63.4110 specifies the dates for submitting the notification of compliance status.
§ 63.9(i)	Adjustment of Submittal Deadlines.	Yes.	
§ 63.9(j)	Change in Previous Information	Yes.	
§ 63.9(k)	Electronic reporting procedures	Yes	Only as specified in § 63.9(j).
§ 63.10(a)	Recordkeeping/Reporting—Applicability and General Information.	Yes.	

sfrattini on LAPJZKW1R2 with $$_JOB
VerDate Sep<11>2014 09:16 Apr 04, 2023 Jkt 256165 PO 00000 Frm 00849 Fmt 8010 Sfmt 8002 Q:\40\256165.XXX PC31

[You must comply with the applicable General Provisions requirements according to the following table:]

Citation	Subject	Applicable to subpart NNNN	Explanation
§ 63.10(b)(1)	General Recordkeeping Requirements.	Yes	Additional requirements are specified in §§ 63.4130 and 63.4131.
§ 63.10(b)(2)(i)	Recordkeeping of Occurrence and Duration of Startups and Shutdowns.	Yes, before September 12, 2019. No on and after September 12, 2019.	*See* § 63.4130(j).
§ 63.10(b)(2)(ii)	Recordkeeping of Failures to Meet Standards.	Yes, before September 12, 2019. No on and after September 12, 2019.	*See* § 63.4130(j).
§ 63.10(b)(2)(iii)	Recordkeeping Relevant to Maintenance of Air Pollution Control and Monitoring Equipment.	Yes.	
§ 63.10(b)(2)(iv)–(v)	Actions Taken to Minimize Emissions During SSM.	Yes, before September 12, 2019. No, on and after September 12, 2019.	*See* § 63.4130(j)(4) for a record of actions taken to minimize emissions during a deviation from the standard.
§ 63.10(b)(2)(vi)	Records for CMS malfunctions	Yes, before September 12, 2019. No, on and after September 12, 2019.	*See* § 63.4130(j) for records of periods of deviation from the standard, including instances where a CMS is inoperative or out-of-control.
§ 63.10(b)(2)(vii)–(xi)	Records	Yes.	
§ 63.10(b)(2)(xii)	Records	Yes.	
§ 63.10(b)(2)(xiii)		No	Subpart NNNN does not require the use of CEMS.
§ 63.10(b)(2)(xiv)		Yes.	
§ 63.10(b)(3)	Recordkeeping Requirements for Applicability Determinations.	Yes.	
§ 63.10(c)(1)–(6)	Additional Recordkeeping Requirements for Sources with CMS.	Yes.	
§ 63.10(c)(7)–(8)	Additional Recordkeeping Requirements for Sources with CMS.	No	*See* § 63.4130(j)(1) for records of periods of deviation from the standard, including instances where a CMS is inoperative or out-of-control.
§ 63.10(c)(10)–(14)	Additional Recordkeeping Requirements for Sources with CMS.	Yes.	
§ 63.10(c)(15)	Records Regarding the SSMP	Yes, before September 12, 2019. No, on and after September 12, 2019.	
§ 63.10(d)(1)	General Reporting Requirements	Yes	Additional requirements are specified in § 63.4120.
§ 63.10(d)(2)	Report of Performance Test Results.	Yes	Additional requirements are specified in § 63.4120(h).
§ 63.10(d)(3)	Reporting Opacity or Visible Emissions Observations.	No	Subpart NNNN does not require opacity or visible emissions observations.
§ 63.10(d)(4)	Progress Reports for Sources With Compliance Extensions.	Yes.	
§ 63.10(d)(5)	Startup, Shutdown, and Malfunction Reports.	Yes, before September 12, 2019. No, on and after September 12, 2019.	*See* § 63.4120(g).
§ 63.10(e)(1)–(2)	Additional CMS Reports	No	Subpart NNNN does not require the use of CEMS.
§ 63.10(e)(3)	Excess Emissions/CMS Performance Reports.	No	Section 63.4120(g) specifies the contents of periodic compliance reports.
§ 63.10(e)(4)	COMS Data Reports	No	Subpart NNNN does not specify requirements for opacity or COMS.
§ 63.10(f)	Recordkeeping/Reporting Waiver	Yes.	

sfrattini on LAPJZKW1R2 with $$_JOB
VerDate Sep<11>2014 09:16 Apr 04, 2023 Jkt 256165 PO 00000 Frm 00850 Fmt 8010 Sfmt 8002 Q:\40\256165.XXX PC31

[You must comply with the applicable General Provisions requirements according to the following table:]

Citation	Subject	Applicable to subpart NNNN	Explanation
§ 63.11	Control Device Requirements/Flares.	No	Subpart NNNN does not specify use of flares for compliance.
§ 63.12	State Authority and Delegations	Yes.	
§ 63.13	Addresses	Yes.	
§ 63.14	Incorporation by Reference	Yes.	
§ 63.15	Availability of Information/Confidentiality.	Yes.	

[84 FR 9618, Mar. 15, 2019, as amended at 85 FR 73906, Nov. 19, 2020]

TABLE 3 TO SUBPART NNNN OF PART 63—DEFAULT ORGANIC HAP MASS FRACTION FOR SOLVENTS AND SOLVENT BLENDS

You may use the mass fraction values in the following table for solvent blends for which you do not have test data or manufacturer's formulation data.

Solvent/solvent blend	CAS. No.	Average organic HAP mass fraction	Typical organic HAP, percent by mass
1. Toluene	108–88–3	1.0	Toluene.
2. Xylene(s)	1330–20–7	1.0	Xylenes, ethylbenzene.
3. Hexane	110–54–3	0.5	n-hexane.
4. n-Hexane	110–54–3	1.0	n-hexane.
5. Ethylbenzene	100–41–4	1.0	Ethylbenzene.
6. Aliphatic 140		0	None.
7. Aromatic 100		0.02	1% xylene, 1% cumene.
8. Aromatic 150		0.09	Naphthalene.
9. Aromatic naphtha	64742–95–6	0.02	1% xylene, 1% cumene.
10. Aromatic solvent	64742–94–5	0.1	Naphthalene.
11. Exempt mineral spirits	8032–32–4	0	None.
12. Ligroines (VM & P)	8032–32–4	0	None.
13. Lactol spirits	64742–89–6	0.15	Toluene.
14. Low aromatic white spirit	64742–82–1	0	None.
15. Mineral spirits	64742–88–7	0.01	Xylenes.
16. Hydrotreated naphtha	64742–48–9	0	None.
17. Hydrotreated light distillate	64742–47–8	0.001	Toluene.
18. Stoddard solvent	8052–41–3	0.01	Xylenes.
19. Super high-flash naphtha	64742–95–6	0.05	Xylenes.
20. Varsol® solvent	8052–49–3	0.01	0.5% xylenes, 0.5% ethylbenzene.
21. VM & P naphtha	64742–89–8	0.06	3% toluene, 3% xylene.
22. Petroleum distillate mixture	68477–31–6	0.08	4% naphthalene, 4% biphenyl.

TABLE 4 TO SUBPART NNNN OF PART 63—DEFAULT ORGANIC HAP MASS FRACTION FOR PETROLEUM SOLVENT GROUPS [A]

You may use the mass fraction values in the following table for solvent blends for which you do not have test data or manufacturer's formulation data.

Solvent type	Average organic HAP mass fraction	Typical organic HAP, percent by mass
Aliphatic [b]	0.03	1% Xylene, 1% Toluene, and 1% Ethylbenzene.
Aromatic [c]	0.06	4% Xylene, 1% Toluene, and 1% Ethylbenzene.

[a] Use this table only if the solvent blend does not match any of the solvent blends in Table 3 to this subpart and you only know whether the blend is aliphatic or aromatic.

[b] e.g., Mineral Spirits 135, Mineral Spirits 150 EC, Naphtha, Mixed Hydrocarbon, Aliphatic Hydrocarbon, Aliphatic Naphtha, Naphthol Spirits, Petroleum Spirits, Petroleum Oil, Petroleum Naphtha, Solvent Naphtha, Solvent Blend.

[c] e.g., Medium-flash Naphtha, High-flash Naphtha, Aromatic Naphtha, Light Aromatic Naphtha, Light Aromatic Hydrocarbons, Aromatic Hydrocarbons, Light Aromatic Solvent.

sfrattini on LAPJZKW1R2 with $$_JOB
VerDate Sep<11>2014 09:16 Apr 04, 2023 Jkt 256165 PO 00000 Frm 00851 Fmt 8010 Sfmt 8002 Q:\40\256165.XXX PC31

TABLE 5 TO SUBPART NNNN OF PART 63—LIST OF HAZARDOUS AIR POLLUTANTS THAT MUST BE COUNTED TOWARD TOTAL ORGANIC HAP CONTENT IF PRESENT AT 0.1 PERCENT OR MORE BY MASS

Chemical name	CAS No.
1,1,2,2-Tetrachloroethane	79–34–5
1,1,2-Trichloroethane	79–00–5
1,1-Dimethylhydrazine	57–14–7
1,2-Dibromo-3-chloropropane	96–12–8
1,2-Diphenylhydrazine	122–66–7
1,3-Butadiene	106–99–0
1,3-Dichloropropene	542–75–6
1,4-Dioxane	123–91–1
2,4,6-Trichlorophenol	88–06–2
2,4/2,6-Dinitrotoluene (mixture)	25321–14–6
2,4-Dinitrotoluene	121–14–2
2,4-Toluene diamine	95–80–7
2-Nitropropane	79–46–9
3,3′-Dichlorobenzidine	91–94–1
3,3′-Dimethoxybenzidine	119–90–4
3,3′-Dimethylbenzidine	119–93–7
4,4′-Methylene bis(2-chloroaniline)	101–14–4
Acetaldehyde	75–07–0
Acrylamide	79–06–1
Acrylonitrile	107–13–1
Allyl chloride	107–05–1
alpha-Hexachlorocyclohexane (a-HCH)	319–84–6
Aniline	62–53–3
Benzene	71–43–2
Benzidine	92–87–5
Benzotrichloride	98–07–7
Benzyl chloride	100–44–7
beta-Hexachlorocyclohexane (b-HCH)	319–85–7
Bis(2-ethylhexyl)phthalate	117–81–7
Bis(chloromethyl)ether	542–88–1
Bromoform	75–25–2
Captan	133–06–2
Carbon tetrachloride	56–23–5
Chlordane	57–74–9
Chlorobenzilate	510–15–6
Chloroform	67–66–3
Chloroprene	126–99–8
Cresols (mixed)	1319–77–3
DDE	3547–04–4
Dichloroethyl ether	111–44–4
Dichlorvos	62–73–7
Epichlorohydrin	106–89–8
Ethyl acrylate	140–88–5
Ethylene dibromide	106–93–4
Ethylene dichloride	107–06–2
Ethylene oxide	75–21–8
Ethylene thiourea	96–45–7
Ethylidene dichloride (1,1-Dichloroethane)	75–34–3
Formaldehyde	50–00–0
Heptachlor	76–44–8
Hexachlorobenzene	118–74–1
Hexachlorobutadiene	87–68–3
Hexachloroethane	67–72–1
Hydrazine	302–01–2
Isophorone	78–59–1
Lindane (hexachlorocyclohexane, all isomers)	58–89–9
m-Cresol	108–39–4
Methylene chloride	75–09–2
Naphthalene	91–20–3
Nitrobenzene	98–95–3
Nitrosodimethylamine	62–75–9
o-Cresol	95–48–7
o-Toluidine	95–53–4
Parathion	56–38–2
p-Cresol	106–44–5
p-Dichlorobenzene	106–46–7
Pentachloronitrobenzene	82–68–8
Pentachlorophenol	87–86–5
Propoxur	114–26–1
Propylene dichloride	78–87–5
Propylene oxide	75–56–9
Quinoline	91–22–5
Tetrachloroethene	127–18–4
Toxaphene	8001–35–2
Trichloroethylene	79–01–6
Trifluralin	1582–09–8
Vinyl bromide	593–60–2
Vinyl chloride	75–01–4
Vinylidene chloride	75–35–4

[84 FR 9621, Mar. 15, 2019]

Subpart OOOO—National Emission Standards for Hazardous Air Pollutants: Printing, Coating, and Dyeing of Fabrics and Other Textiles

SOURCE: 68 FR 32189, May 29, 2003, unless otherwise noted.

WHAT THIS SUBPART COVERS

§ 63.4280 What is the purpose of this subpart?

This subpart establishes national emission standards for hazardous air pollutants (NESHAP) for fabric and other textiles printing, coating and dyeing operations. This subpart also establishes requirements to demonstrate initial and continuous compliance with the emission limitations.

§ 63.4281 Am I subject to this subpart?

(a) Except as provided in paragraphs (c) and (d) of this section, the source category to which this subpart applies is the printing, coating, slashing, dyeing or finishing of fabric and other textiles, and it includes the subcategories listed in paragraphs (a)(1) through (3) of this section.

(1) The coating and printing subcategory includes any operation that coats or prints fabric or other textiles. Coating and printing operations are defined in § 63.4371. Coated and printed substrates are used in products including, but not limited to, architectural structures, apparel, flexible hoses, hot-air balloons, lightweight liners, luggage, military fabric, rainwear, sheets, tents, threads and V-belts. The coating and printing subcategory includes any

sfrattini on LAPJZKW1R2 with $$_JOB
VerDate Sep<11>2014 09:16 Apr 04, 2023 Jkt 256165 PO 00000 Frm 00852 Fmt 8010 Sfmt 8010 Q:\40\256165.XXX PC31

fabric or other textile web coating line that also performs coating on another substrate unless such coating is specifically excluded from this subpart by another NESHAP in this part or is exempted from the requirements of this subpart based on the criteria in paragraph (e) of this section. Web coating lines exclusively dedicated to coating or printing fabric and other textiles are subject to this subpart.

(2) The slashing subcategory includes any operation with slashing operations as defined in §63.4371. In the slashing process, sizing compounds are applied to warp yarn to bind the fiber together and stiffen the yarn to provide abrasion resistance during weaving.

(3) The dyeing and finishing subcategory includes any operation that dyes or finishes a fabric or other textiles. Dyeing and finishing operations are defined in §63.4371. Dyed and finished textiles are used in a wide range of products including, but not limited to, apparel, carpets, high-performance industrial fabrics, luggage, military fabrics, outer wear, sheets, towels, and threads.

(b) You are subject to this subpart if you own or operate a new, reconstructed, or existing affected source, as defined in §63.4282, that is a major source, is located at a major source, or is part of a major source of hazardous air pollutants (HAP). Major source is defined in §63.2 of this part.

(c) This subpart does not apply to coating, printing, slashing, dyeing, or finishing operations that meet any of the criteria of paragraphs (c)(1) through (5) of this section.

(1) Coating and printing, slashing, or dyeing and finishing operations conducted at a source that uses only regulated materials that contain no organic HAP as defined in §63.4371.

(2) Coating, printing, slashing, dyeing, or finishing that occurs at research or laboratory operations or that is part of janitorial, building, and facility maintenance operations.

(3) Coating, printing, slashing, dyeing, or finishing operations used by a facility and not for commerce, unless organic HAP emissions from the coating, printing, slashing, dyeing or finishing operations are as high as the major source HAP emissions specified in paragraph (b) of this section.

(4) Fabric and other textile substrate web coating or printing operations conducted at ambient temperatures that do not involve drying or curing equipment such as ovens, tenter frames, steam cans, or dryers.

(5) Coating, printing, slashing, dyeing, or finishing operations performed on-site at installations owned or operated by the Armed Forces of the United States (including the Coast Guard and the National Guard of any State).

(d) Web coating lines specified in paragraphs (d)(1) through (4) of this section are not part of the affected source of this subpart.

(1) Any web coating operation that is part of the affected source of subpart JJJJ of this part (national emission standards for hazardous air pollutants for paper and other web coating). This would include any web coating line that coats both a paper and other web substrate and a fabric or other textile substrate for use in flexible packaging, pressure sensitive tape and abrasive materials, or any web coating line laminating a fabric substrate to paper.

(2) Any web coating operation that is part of the affected source of subpart XXXX of this part (NESHAP for tire manufacturing). This would include any web coating line that applies coatings to both tire cord and to textile cord used in the production of belts and hoses.

(3) Coating, slashing, dyeing, or finishing operations at a synthetic fiber manufacturing facility where the fibers are the final product of the facility.

(4) Any web coating line that coats or prints fabric or other textiles for use in flexible packaging and that is included in an affected source under subpart KK of this part (National Emission Standards for the Printing and Publishing Industry).

(e) Any web coating line that coats both fabric and other textiles, and another substrate such as paper, must comply with the subpart of this part that applies to the predominant activity conducted on the affected source. Predominant activity for this subpart is 90 percent of the mass of substrate coated during the compliance period. (For example, a web coating line that

sfrattini on LAPJZKW1R2 with $$_JOB
VerDate Sep<11>2014 09:16 Apr 04, 2023 Jkt 256165 PO 00000 Frm 00853 Fmt 8010 Sfmt 8010 Q:\40\256165.XXX PC31

coats 90 percent or more of a paper substrate, and 10 percent or less of a fabric or other textile substrate, would be subject to 40 CFR 63, subpart JJJJ.)

[68 FR 32189, May 29, 2003, as amended at 69 FR 47005, Aug. 4, 2004; 71 FR 29805, May 24, 2006]

§ 63.4282 What parts of my plant does this subpart cover?

(a) This subpart applies to each new, reconstructed, and existing affected source within each of the three subcategories listed in § 63.4281(a).

(b) The affected source for the web coating and printing subcategory is the collection of all of the items listed in paragraphs (b)(1) through (5) of this section that are used in fabric and other textiles web coating and printing operations. The regulated materials for the web coating and printing subcategory are the coating, printing, thinning and cleaning materials used in the affected source.

(1) All web coating and printing equipment used to apply cleaning materials to a substrate on the coating or printing line to prepare it for coating or printing material application, to apply coating or printing materials to a substrate and to dry or cure the coating or printing materials, or equipment used to clean web coating/printing operation equipment;

(2) All containers used for storage and vessels used for mixing coating, printing, thinning, or cleaning materials;

(3) All equipment and containers used for conveying coating, printing, thinning, or cleaning materials;

(4) All containers used for storage, and all equipment and containers used for conveying waste materials generated by a coating or printing operation; and

(5) All equipment, structures, and/or devices(s) used to convey, treat, or dispose of wastewater streams or residuals generated by a coating or printing operation.

(c) The affected source for the slashing subcategory is the collection of all of the items listed in paragraphs (c)(1) through (5) of this section that are used in slashing operations. The regulated materials for the slashing subcategory are the slashing materials used in the affected source.

(1) All slashing equipment used to apply and dry size on warp yarn;

(2) All containers used for storage and vessels used for mixing slashing materials;

(3) All equipment and containers used for conveying slashing materials;

(4) All containers used for storage and all equipment and containers used for conveying waste materials generated by a slashing operation; and

(5) All equipment, structures, and/or devices(s) used to convey, treat, or dispose of wastewater streams or residuals generated by a slashing operation.

(d) The affected source for the dyeing and finishing subcategory is the collection of all of the items listed in paragraphs (d)(1) through (5) of this section that are used in dyeing and finishing operations. The regulated materials for the dyeing and finishing subcategory are the dyeing and finishing materials used in the affected source.

(1) All dyeing and finishing equipment used to apply dyeing or finishing materials, to fix dyeing materials to the substrate, to rinse the textile substrate, or to dry or cure the dyeing or finishing materials;

(2) All containers used for storage and vessels used for mixing dyeing or finishing materials;

(3) All equipment and containers used for conveying dyeing or finishing materials;

(4) All containers used for storage, and all equipment and containers used for conveying, waste materials generated by a dyeing or finishing operation; and

(5) All equipment, structures, and/or devices(s) used to convey, treat, or dispose of wastewater streams or residuals generated by a dyeing or finishing operation.

(e) An affected source is a new source if it meets the criteria in paragraph (e)(1) of this section and the criteria in either paragraph (e)(2) or (3) of this section.

(1) You commenced the construction of the source after July 11, 2002.

(2) The web coating and printing, slashing, or dyeing and finishing operation is performed at a source where no web coating and printing, slashing, or

sfrattini on LAPJZKW1R2 with $$_JOB
VerDate Sep<11>2014 09:16 Apr 04, 2023 Jkt 256165 PO 00000 Frm 00854 Fmt 8010 Sfmt 8010 Q:\40\256165.XXX PC31

dyeing and finishing operation was previously performed.

(3) The web coating and printing, slashing, or dyeing and finishing operation is performed in a subcategory in which no web coating and printing, slashing, or dyeing and finishing operation was previously performed.

(f) An affected source is reconstructed if you meet the criteria as defined in §63.2.

(g) An affected source is existing if it is not new or reconstructed.

§63.4283 When do I have to comply with this subpart?

The date by which you must comply with this subpart is called the compliance date. The compliance date for each type of affected source is specified in paragraphs (a) through (c) of this section. The compliance date begins the initial compliance period during which you conduct the initial compliance demonstration described in §§63.4320, 63.4330, 63.4340, and 63.4350.

(a) For a new or reconstructed affected source, the compliance date is the applicable date in paragraph (a)(1) or (2) of this section:

(1) If the initial startup of your new or reconstructed affected source is before May 29, 2003, the compliance date is May 29, 2003.

(2) If the initial startup of your new or reconstructed affected source occurs after May 29, 2003, the compliance date is the date of initial startup of your affected source.

(b) For an existing affected source, the compliance date is the date 3 years after May 29, 2003.

(c) For an area source that increases its emissions or its potential to emit such that it becomes a major source of HAP emissions, the compliance date is specified in paragraphs (c)(1) and (2) of this section.

(1) For any portion of the source that becomes a new or reconstructed affected source subject to this subpart, the compliance date is the date of initial startup of the affected source or May 29, 2003, whichever is later.

(2) For any portion of the source that becomes an existing affected source subject to this subpart, the compliance date is the date 1 year after the area source becomes a major source or 3 years after May 29, 2003, whichever is later.

(d) You must meet the notification requirements in §63.4310 according to the dates specified in that section and in subpart A of this part. Some of the notifications must be submitted before the compliance dates described in paragraphs (a) through (c) of this section.

EMISSION LIMITATIONS

§63.4290 What emission limits must I meet?

You must meet the emission limit for the subcategory or subcategories present in your facility. The three subcategories are: Web coating and printing, slashing, and dyeing and finishing. Table 1 to this subpart presents the emission limits for a new or reconstructed affected source and for an existing affected source in each subcategory.

§63.4291 What are my options for meeting the emission limits?

You must include all regulated materials (as defined in §63.4371) used in the affected source when determining whether the organic HAP emission rate is equal to or less than the applicable emission limit in Table 1 to this subpart. To make this determination, you must use at least one of the compliance options for the subcategory listed in paragraphs (a) through (c) of this section.

(a) *Web coating and printing.* You may apply any one of the compliance options in paragraphs (a)(1) through (5) of this section to an individual web coating/printing operation, or to multiple web coating/printing operations in the affected source as a group, or to the entire affected source in the web coating and printing subcategory. You may use different compliance options for different web coating/printing operations or at different times on the same web coating/printing operation. However, you may not use different compliance options at the same time on the same web coating/printing operation. If you switch between compliance options for any web coating/printing operation or group of operations, you must document this switch as required by §63.4312(c), and you must report it in

sfrattini on LAPJZKW1R2 with $$_JOB
VerDate Sep<11>2014 09:16 Apr 04, 2023 Jkt 256165 PO 00000 Frm 00855 Fmt 8010 Sfmt 8010 Q:\40\256165.XXX PC31

the next semiannual compliance report required in § 63.4311.

(1) *Compliant material option.* Demonstrate that the organic HAP content, as purchased, of each coating and printing material applied in the web coating/printing operation(s) is less than or equal to the applicable emission limit in Table 1 to this subpart, and that each thinning and cleaning material as purchased contains no organic HAP (as defined in § 63.4371). You must meet all the requirements of §§ 63.4320, 63.4321, and 63.4322 to demonstrate compliance with the applicable emission limit using this option.

(2) *Emission rate without add-on controls option.* Demonstrate that, based on the regulated materials applied in the web coating/printing operation(s), the organic HAP emission rate for the web coating/printing operation(s) is less than or equal to the applicable emission limit in Table 1 to this subpart, calculated as a rolling 12-month average emission rate. You must meet all the requirements of §§ 63.4330, 63.4331, and 63.4332 to demonstrate compliance with the applicable emission limit using this option.

(3) *Emission rate with add-on controls option.* Demonstrate that, based on the regulated materials applied in the web coating/printing operation(s) and the organic HAP emissions reductions achieved by emission capture systems and add-on controls, the organic HAP emission rate for the web coating/printing operation(s) is less than or equal to the applicable emission limit in Table 1 to this subpart, calculated as a rolling 12-month average emission rate. If you use this compliance option, you must also demonstrate that all capture systems and control devices for the web coating/printing operation(s) meet the operating limits required in § 63.4292, except for solvent recovery systems for which you conduct liquid-liquid material balances according to § 63.4341(e)(5), and that you meet the work practice standards required in § 63.4293. You must meet all the requirements of §§ 63.4340 through 63.4342 and 63.4360 through 63.4364 to demonstrate compliance with the emission limits, operating limits, and work practice standards using this option.

(4) *Organic HAP overall control efficiency option.* Demonstrate that, based on the organic HAP emission capture and add-on control efficiencies achieved, the organic HAP overall control efficiency is greater than or equal to the applicable organic HAP overall control efficiency limit in Table 1 to this subpart. If you use this compliance option, you must also demonstrate that all capture systems and control devices for the web coating/printing operation(s) meet the operating limits required in § 63.4292, except for solvent recovery systems for which you conduct liquid-liquid material balances according to § 63.4351(d)(5), and that you meet the work practice standards required in § 63.4293. You must meet all the requirements of §§ 63.4350 through 63.4352 and 63.4360 through 63.4364 to demonstrate compliance with the applicable emission limits, operating limits, and work practice standards using this option.

(5) *Oxidizer outlet organic HAP concentration limit.* If you use an oxidizer to control organic HAP emissions, demonstrate that the oxidizer is operated such that the outlet organic HAP concentration is no greater than 20 parts per million by volume (ppmv) on a dry basis, and that the efficiency of the capture system is 100 percent. If you use this compliance option, you must also demonstrate that all capture systems and oxidizers for the web coating/printing operation(s) meet the operating limits required in § 63.4292, and that you meet the work practice standards required in § 63.4293. You must meet all the requirements of §§ 63.4350 through 63.4352 and 63.4360 through 63.4364 to demonstrate compliance with the applicable emission limits, operating limits, and work practice standards using this option.

(b) *Slashing.* You must use the compliant material option to demonstrate that the mass fraction of organic HAP in each slashing material as purchased for the slashing operation(s) is less than or equal to the applicable emission limit in Table 1 to this subpart. You must meet all the requirements of §§ 63.4320, 63.4321, and 63.4322 to demonstrate compliance with the applicable emission limit.

sfrattini on LAPJZKW1R2 with $$_JOB
VerDate Sep<11>2014 09:16 Apr 04, 2023 Jkt 256165 PO 00000 Frm 00856 Fmt 8010 Sfmt 8010 Q:\40\256165.XXX PC31

(c) *Dyeing and finishing*. You may apply any one of the compliance options in paragraphs (c)(1) through (3) of this section to an individual dyeing/finishing operation, or to multiple dyeing/finishing operations in the affected source as a group, or to the entire affected source in the dyeing and finishing subcategory. You may use different compliance options for different dyeing/finishing operations or at different times on the same dyeing/finishing operation. However, you may not use different compliance options at the same time on the same dyeing/finishing operation. If you switch between compliance options for any dyeing/finishing operation or group of operations, you must document this switch as required by § 63.4312(c), and you must report it in the next semiannual compliance report required in § 63.4311. If you choose to apply the compliance option in paragraph (c)(4) to your dyeing/finishing operations, it must be applied to the entire affected source in the dyeing and finishing subcategory. You may not apply any of the compliance options in paragraphs (c)(1) through (3) of this section to any dyeing/finishing operation in the affected source if you use the equivalent emission rate limit in paragraph (c)(4) for your dyeing/finishing affected source.

(1) *Compliant material option*. Demonstrate that the mass fraction of organic HAP, as purchased, of each dyeing and finishing material applied in the dyeing/finishing operation(s) is less than or equal to the applicable emission limit in Table 1 to this subpart. You must meet all the requirements of §§ 63.4320, 63.4321, and 63.4322 to demonstrate compliance with the applicable emission limit using this option.

(2) *Emission rate without add-on controls option*. Demonstrate that, based on the dyeing and finishing materials applied in the dyeing/finishing operation(s), the organic HAP emission rate for the dyeing operation(s), the organic HAP emission rate for the finishing operation(s) or the combined organic HAP emission rate for dyeing and finishing is less than or equal to the applicable emission limit(s) in Table 1 to this subpart, calculated as a rolling 12-month average emission rate. You must meet all the requirements of §§ 63.4330, 63.4331, and 63.4332 to demonstrate compliance with the applicable emission limit(s) using this option.

(3) *Emission rate with add-on controls option*. Demonstrate that, based on the dyeing and finishing materials applied in the dyeing/finishing operation(s) and the organic HAP emissions reductions achieved by emission capture systems and add-on controls, the organic HAP emission rate for the dyeing/finishing operation(s) is less than or equal to the applicable emission limit in Table 1 to this subpart, calculated as a rolling 12-month average emission rate. If you use this compliance option, you must also demonstrate that all capture systems and control devices for the dyeing/finishing operation(s) meet the operating limits required in § 63.4292, except for solvent recovery systems for which you conduct liquid-liquid material balances according to § 63.4341(f)(5), and that you meet the work practice standards required in § 63.4293. You must meet all the requirements of §§ 63.4340 through 63.4342 and 63.4360 through 63.4364 to demonstrate compliance with the emission limits, operating limits, and work practice standards using this option.

(4) *Equivalent emission rate option*. Demonstrate that the dyeing and finishing affected source meets all the requirements of paragraphs (4)(i) through (iv) of this paragraph.

(i) The fraction of organic HAP applied in your dyeing/finishing affected source that is discharged to the wastewater is at least 90 percent, determined according to § 63.4331(d).

(ii) The wastewater is discharged to a POTW or onsite secondary wastewater treatment.

(iii) The total organic HAP emissions from your dyeing/finishing affected source are less than 10 tons per year, as calculated in Equation 4 of § 63.4331.

(iv) You must meet the applicable requirements of § 63.4330 and maintain records in accordance with § 63.4312(c)(2)(iv) to demonstrate compliance with the equivalent emission rate option.

§ 63.4292 What operating limits must I meet?

(a) For any web coating/printing operation, slashing operation, or dyeing/

sfrattini on LAPJZKW1R2 with $$_JOB
VerDate Sep<11>2014 09:16 Apr 04, 2023 Jkt 256165 PO 00000 Frm 00857 Fmt 8010 Sfmt 8010 Q:\40\256165.XXX PC31

finishing operation on which you use the compliant material option; web coating/printing operation or dyeing/finishing operation on which you use the emission rate without add-on controls option; or dyeing/finishing affected source on which you use the equivalent emission rate limit option, you are not required to meet any operating limits.

(b) For any controlled web coating/printing operation or dyeing/finishing operation on which you use the emission rate with add-on controls option, or controlled web coating/printing operation on which you use the organic HAP overall control efficiency option or the oxidizer outlet organic HAP concentration option, except those web coating/printing operations for which you use a solvent recovery system and conduct a liquid-liquid material balance according to § 63.4341(e)(5) and those dyeing/finishing operations for which you use a solvent recovery system and conduct a liquid-liquid material balance according to § 63.4341(f)(5), you must meet the operating limits specified in Table 2 of this subpart. These operating limits apply to the emission capture and control systems on the web coating/printing operation(s) and dyeing/finishing operations for which you use this option, and you must establish the operating limits during the performance test according to the procedures in § 63.4363. You must meet the operating limits at all times after you establish them.

(c) If you use an add-on control device other than those listed in Table 2 of this subpart, or wish to monitor an alternative parameter and comply with a different operating limit, you must apply to the Administrator for approval of alternative monitoring under § 63.8(f).

§ 63.4293 What work practice standards must I meet?

(a) For any slashing operation, you are not required to meet any work practice standards. For any web coating/printing operation(s) or dyeing/finishing operation(s) on which you use the compliant material option or the emission rate without add-on controls option, you are not required to meet any work practice standards. For any dyeing/finishing affected source on which you use the equivalent emission rate option, you are not required to meet any work practice standards.

(b) If you use either the emission rate with add-on controls option, the organic HAP overall control efficiency option, or the oxidizer outlet organic HAP concentration option for a web coating/printing operation; or you use the emission rate with add-on controls option for a dyeing/finishing operation; you must develop and implement a work practice plan to minimize organic HAP emissions from the storage, mixing, and conveying of regulated materials used in, and waste materials generated by, the coating/printing or dyeing/finishing operations for which you use this option; or you must meet an alternative standard as provided in paragraph (c) of this section. The plan must specify practices and procedures to ensure that, at a minimum, the elements specified in paragraphs (b)(1) through (5) of this section are implemented.

(1) All organic-HAP-containing regulated materials and waste materials must be stored in closed containers.

(2) Spills of organic-HAP-containing regulated materials, and waste materials must be minimized.

(3) Organic-HAP-containing regulated materials and waste materials must be conveyed from one location to another in closed containers or pipes.

(4) Mixing vessels which contain organic-HAP-containing regulated materials must be closed except when adding to, removing, or mixing the contents.

(5) Emissions of organic HAP must be minimized during cleaning of web coating/printing or dyeing/finishing storage, mixing, and conveying equipment.

(c) As provided in § 63.6(g), you may request approval from the Administrator to use an alternative to the work practice standards in this section.

sfrattini on LAPJZKW1R2 with $$_JOB
VerDate Sep<11>2014 09:16 Apr 04, 2023 Jkt 256165 PO 00000 Frm 00858 Fmt 8010 Sfmt 8010 Q:\40\256165.XXX PC31

GENERAL COMPLIANCE REQUIREMENTS

§ 63.4300 What are my general requirements for complying with this subpart?

(a) You must be in compliance with the emission limitations in this subpart as specified in paragraphs (a)(1) through (4) of this section.

(1) Any web coating/printing, slashing, or dyeing/finishing operation(s) for which you use the compliant material option, as specified in § 63.4291(a)(1), (b), or (c)(1) must be in compliance with the applicable emission limit in Table 1 to this subpart at all times.

(2) Any web coating/printing or dyeing/finishing operation(s) for which you use the emission rate without add-on controls option, as specified in § 63.4291(a)(2) or (c)(2), must be in compliance with the applicable emission limit in Table 1 to this subpart for all compliance periods.

(3) Any web coating/printing or dyeing/finishing operation(s) for which you use the emission rate with add-on controls option, as specified in § 63.4291(a)(3) or (c)(3), and any web coating/printing operation(s) for which you use either the organic HAP overall control efficiency option, as specified in § 63.4291(a)(4), or the oxidizer outlet organic HAP concentration option, as specified in § 63.4291(a)(5), must be in compliance with the emission limitations as specified in paragraphs (a)(3)(i) through (iii) of this section.

(i) Before September 12, 2019, the web coating/printing or dyeing/finishing operation(s) must be in compliance with the applicable emission limit in Table 1 to this subpart or minimize emissions at all times as required by § 63.6(e)(1). On and after September 12, 2019, the web coating/printing or dyeing/finishing operation(s) must be in compliance with the applicable emission limit in Table 1 to this subpart at all times.

(ii) Each controlled web coating/printing or dyeing/finishing operation must be in compliance with the operating limits for emission capture systems and add-on control devices required by § 63.4292 for all averaging time periods except for solvent recovery systems for which you conduct liquid-liquid material balances according to § 63.4341(e)(5) or (f)(5) or § 63.4351(d)(5).

(iii) Each controlled web coating/printing or dyeing/finishing operation must be in compliance with the work practice standards in § 63.4293 at all times.

(4) Any dyeing/finishing affected source for which you use the equivalent emission rate option, as specified in § 63.4291(c)(4), must operate within the operating scenarios, as defined in § 63.4371, for which you determined the fraction of organic HAP applied in your dyeing/finishing affected source that is discharged to wastewater according to § 63.4331(d) at all times.

(b) Before September 12, 2019, you must always operate and maintain your affected source, including air pollution control and monitoring equipment, according to the provisions in § 63.6(e)(1)(i). On and after September 12, 2019, at all times, the owner or operator must operate and maintain any affected source, including associated air pollution control equipment and monitoring equipment, in a manner consistent with safety and good air pollution control practices for minimizing emissions. The general duty to minimize emissions does not require the owner or operator to make any further efforts to reduce emissions if levels required by the applicable standard have been achieved. Determination of whether a source is operating in compliance with operation and maintenance requirements will be based on information available to the Administrator that may include, but is not limited to, monitoring results, review of operation and maintenance procedures, review of operation and maintenance records, and inspection of the affected source.

(c) Before September 12, 2019, if your affected source uses an emission capture system and add-on control device, you must develop a written startup, shutdown, and malfunction plan according to the provisions in § 63.6(e)(3). The plan must address the startup, shutdown, and corrective actions in the event of a malfunction of the emission capture system or the add-on control device. The plan must also address any web coating/printing or dyeing/finishing operation equipment such as

sfrattini on LAPJZKW1R2 with $$_JOB
VerDate Sep<11>2014 09:16 Apr 04, 2023 Jkt 256165 PO 00000 Frm 00859 Fmt 8010 Sfmt 8010 Q:\40\256165.XXX PC31

conveyors that move the substrate among enclosures that may cause increased emissions or that would affect capture efficiency if the process equipment malfunctions. A startup, shutdown, and malfunction plan is not required on and after September 12, 2019.

[68 FR 32189, May 29, 2003, as amended at 71 FR 20465, Apr. 20, 2006; 84 FR 9623, Mar. 15, 2019]

§ 63.4301 What parts of the General Provisions apply to me?

Table 3 to this subpart shows which parts of the General Provisions in §§ 63.1 through 63.15 apply to you.

NOTIFICATIONS, REPORTS, AND RECORDS

§ 63.4310 What notifications must I submit?

(a) You must submit the notifications in §§ 63.7(b) and (c), 63.8(f)(4), and 63.9(b) through (e) and (h) that apply to you by the dates specified in those sections, except as provided in paragraphs (b) and (c) of this section.

(b) *Initial Notification.* You must submit the Initial Notification required by § 63.9(b) for a new or reconstructed affected source no later than 120 days after initial startup, 120 days after May 29, 2003, or no later than 120 days after the source becomes subject to this subpart, whichever is later. For an existing affected source, you must submit the Initial Notification no later than 1 year after May 29, 2003, or no later than 120 days after the source becomes subject to this subpart, whichever is later.

(c) *Notification of Compliance Status.* You must submit the Notification of Compliance Status required by § 63.9(h) no later than 30 calendar days following the end of the initial compliance period described in § 63.4320, § 63.4330, § 63.4340, or § 63.4350 that applies to your affected source. The Notification of Compliance Status must contain the information specified in paragraphs (c)(1) through (9) of this section and in § 63.9(h).

(1) Company name and address.

(2) Statement by a responsible official with that official's name, title, and signature, certifying the truth, accuracy, and completeness of the content of the report.

(3) Date of the report and beginning and ending dates of the reporting period. The reporting period is the initial compliance period described in § 63.4320, § 63.4330, § 63.4340, or § 63.4350 that applies to your affected source.

(4) Identification of the compliance option or options specified in § 63.4291 that you used during the initial compliance period on each web coating/printing operation in each web coating/printing affected source, on each slashing operation in each slashing affected source, and on each dyeing/finishing operation in each dyeing/finishing affected source.

(5) Statement of whether or not the affected source achieved the emission limitations for the initial compliance period.

(6) If you had a deviation, include the information in paragraphs (c)(6)(i) and (ii) of this section.

(i) A description, and statement of the cause of, the deviation.

(ii) If you failed to meet the applicable emission limit in Table 1 to this subpart, include all the calculations you used to determine the kilogram (kg) organic HAP emitted per kg of solids applied in coating and printing material or the weight percent organic HAP compounds in slashing, dyeing or finishing material to demonstrate your failure to meet the applicable emission limit. You do not need to submit information provided by the materials suppliers or manufacturers or test reports.

(7) For each of the data items listed in paragraphs (c)(7)(i) through (iii) of this section that is required by the compliance option(s) you used to demonstrate compliance with the emission limit, include an example of how you determined the value, including calculations and supporting data. Supporting data can include a copy of the information provided by the supplier or manufacturer of the example regulated material or a summary of the results of testing conducted according to § 63.4321(e)(1) or (2). You do not need to submit copies of any test reports.

(i) Mass fraction of organic HAP and mass fraction of solids for one coating or printing formulation including thinning materials, mass fraction of organic HAP for one cleaning material and mass fraction of organic HAP for

sfrattini on LAPJZKW1R2 with $$_JOB
VerDate Sep<11>2014 09:16 Apr 04, 2023 Jkt 256165 PO 00000 Frm 00860 Fmt 8010 Sfmt 8010 Q:\40\256165.XXX PC31

all of the regulated materials as purchased used in one slashing operation or dyeing/ finishing operation.

(ii) Mass of coating or printing formulation used in web coating/printing operation or of dyeing and finishing materials used in the dyeing/finishing operation during the compliance period.

(iii) The amount of waste materials and the mass of organic HAP contained in the waste materials for which you are claiming an allowance in Equation 1 or 4 of §63.4331.

(iv) The mass of organic HAP in the dyeing and finishing materials applied during the compliance period and the mass of organic HAP in wastewater discharged to a POTW or receiving onsite secondary treatment for which you are claiming an allowance in Equation 4 of §63.4331.

(8) The calculation of kg organic HAP per kg of coating and printing solids applied and of kg organic HAP per kg of dyeing and finishing material as purchased for the compliance option(s) you use, as specified in paragraphs (c)(8)(i) through (vii) of this section.

(i) For the compliant material option as specified in §63.4291(a)(1) for web coating/printing operations, provide an example calculation of the organic HAP content for one coating and one printing material, as appropriate, using Equation 1 of §63.4321.

(ii) For the emission rate without add-on controls option as specified in §63.4291(a)(2) for web coating/printing operations, provide the calculation of the total mass of organic HAP emissions; the calculation of the total mass of coating and printing solids applied; and the calculation of the organic HAP emission rate, using Equations 1, 2, and 3, respectively, of §63.4331.

(iii) For the emission rate without add-on controls option as specified in §63.4291(c)(2) for dyeing/finishing operations, provide the calculation of the total mass of organic HAP emissions; the calculation of the total mass of dyeing and finishing materials applied; and the calculation of the organic HAP emission rate, using Equations 4, 5, and 6, respectively, of §63.4331.

(iv) For the emission rate with add-on controls option as specified in §63.4291(a)(3) for web coating/printing operations, provide the calculation of the total mass of organic HAP emissions before add-on controls using Equation 1 of §63.4331, and the calculation of the organic HAP emission rate using Equation 4 of §63.4341.

(v) For the emission rate with add-on controls option as specified in §63.4291(c)(3) for dyeing/finishing operations, provide the calculation of the mass of organic HAP emissions before add-on controls using Equation 4 of §63.4331, and the calculation of the organic HAP emission rate using Equation 8 of §63.4341.

(vi) For the organic HAP overall control efficiency option as specified in §63.4291(a)(4), provide the calculation of the total mass of organic HAP emissions before add-on controls using Equation 1 of §63.4331 and the calculation of the organic HAP overall control efficiency using Equation 1 of §63.4351.

(vii) For the equivalent emission rate option as specified in §63.4291(c)(4), provide the calculation of the fraction of organic HAP applied in affected processes that is discharged to wastewater according to §63.4331(d), the calculation of the total organic HAP emissions from your dyeing/finishing affected source using Equation 4 of §63.4331, and documentation that organic HAP containing wastewater is either discharged to a POTW or treated onsite in a treatment system that includes at least secondary treatment.

(9) For the emission rate with add-on controls option as specified in §63.4291(a)(3) and (c)(3), the organic HAP overall control efficiency option as specified in §63.4291(a)(4), and the oxidizer outlet organic HAP concentration option as specified in §63.4291(a)(5), for each controlled web coating/printing or dyeing/finishing operation using an emission capture system and add-on control device other than a solvent recovery system for which you conduct liquid-liquid material balances according to §63.4341(e)(5) or (f)(5) or §63.4351(d)(5), you must include the information specified in paragraphs (c)(9)(i) through (v) of this section.

(i) For each emission capture system, a summary of the data and copies of the calculations supporting the determination that the emission capture system is a permanent total enclosure

sfrattini on LAPJZKW1R2 with $$_JOB
VerDate Sep<11>2014 09:16 Apr 04, 2023 Jkt 256165 PO 00000 Frm 00861 Fmt 8010 Sfmt 8010 Q:\40\256165.XXX PC31

(PTE) or a measurement of the emission capture system efficiency. If you are demonstrating compliance with the oxidizer outlet organic HAP concentration option, the emission capture system must be a PTE. Include a description of the protocol followed for measuring capture efficiency, summaries of any capture efficiency tests conducted, and any calculations supporting the capture efficiency determination. If you use the data quality objective (DQO) or lower confidence limit (LCL) approach, you must also include the statistical calculations to show you meet the DQO or LCL criteria in appendix A to subpart KK of this part. You do not need to submit complete test reports.

(ii) A summary of the results of each add-on control device performance test. You do not need to submit complete test reports.

(iii) A list of each emission capture system's and add-on control device's operating limits and a summary of the data used to calculate those limits.

(iv) A statement of whether or not you developed and implemented the work practice plan required by § 63.4293.

(v) Before September 12, 2019, a statement of whether or not you developed the startup, shutdown, and malfunction plan required by § 63.4300(c). This statement is not required on and after September 12, 2019.

[68 FR 32189, May 29, 2003, as amended at 71 FR 20465, Apr. 20, 2006; 84 FR 9623, Mar. 15, 2019; 85 FR 73907, Nov. 19, 2020]

§ 63.4311 What reports must I submit?

(a) *Semiannual compliance reports.* You must submit semiannual compliance reports for each affected source according to the requirements of paragraphs (a)(1) through (8) of this section. The semiannual compliance reporting requirements of this section may be satisfied by reports required under other parts of the Clean Air Act (CAA), as specified in paragraph (a)(2) of this section.

(1) *Dates.* Unless the Administrator has approved a different schedule for submission of reports under § 63.10(a), you must prepare and submit each semiannual compliance report according to the dates specified in paragraphs (a)(1)(i) through (iv) of this section.

(i) The first semiannual compliance report must cover the first semiannual reporting period which begins the day after the end of the initial compliance period described in § 63.4320, § 63.4330, § 63.4340, or § 63.4350 that applies to your affected source and ends on June 30 or December 31, whichever date is the first date at least 6 months after the end of the initial compliance period.

(ii) Each subsequent semiannual compliance report must cover the subsequent semiannual reporting period from January 1 through June 30 or the semiannual reporting period from July 1 through December 31.

(iii) Each semiannual compliance report must be postmarked or delivered no later than July 31 or January 31, whichever date is the first date following the end of the semiannual reporting period.

(iv) For each affected source that is subject to permitting regulations pursuant to 40 CFR part 70 or 40 CFR part 71, and if the permitting authority has established dates for submitting semiannual reports pursuant to 40 CFR 70.6(a)(3)(iii)(A) or 40 CFR 71.6(a)(3)(iii)(A), you may submit the first and subsequent compliance reports according to the dates the permitting authority has established instead of according to the date specified in paragraph (a)(1)(iii) of this section.

(2) *Inclusion with title V report.* Each affected source that has obtained a title V operating permit pursuant to 40 CFR part 70 or 40 CFR part 71 must report all deviations as defined in this subpart in the semiannual monitoring report required by 40 CFR 70.6(a)(3)(iii)(A) or 40 CFR 71.6(a)(3)(iii)(A). If an affected source submits a semiannual compliance report pursuant to this section along with, or as part of, the semiannual monitoring report required by 40 CFR 70.6(a)(3)(iii)(A) or 40 CFR 71.6(a)(3)(iii)(A), and the semiannual compliance report includes all required information concerning deviations from any emission limitation in this subpart, its submission shall be deemed to satisfy any obligation to report the same deviations in the semiannual monitoring report. However, submission of a semiannual compliance report

sfrattini on LAPJZKW1R2 with $$_JOB
VerDate Sep<11>2014 09:16 Apr 04, 2023 Jkt 256165 PO 00000 Frm 00862 Fmt 8010 Sfmt 8010 Q:\40\256165.XXX PC31

shall not otherwise affect any obligation the affected source may have to report deviations from permit requirements to the permitting authority.

(3) *General requirements.* The semiannual compliance report must contain the information specified in paragraphs (a)(3)(i) through (v) of this section, and the information specified in paragraphs (a)(4) through (8) and (c)(1) of this section that is applicable to your affected source. If your affected source is a slashing operation(s), you are only required to report the information in paragraphs (a)(3)(i) through (iii) of this section and the information in paragraph (a)(4) or (a)(5) of this section, as applicable.

(i) Company name and address.

(ii) Statement by a responsible official with that official's name, title, and signature, certifying the truth, accuracy, and completeness of the content of the report.

(iii) Date of report and beginning and ending dates of the reporting period. The reporting period is the 6-month period ending on June 30 or December 31.

(iv) Identification of the compliance option or options specified in §63.4291 that you used on each web coating/printing and dyeing/finishing operation during the reporting period. If you switched between compliance options during the reporting period, you must report the beginning and ending dates you used each option.

(v) If you used the emission rate without add-on controls, the emission rate with add-on controls, or the organic HAP overall control efficiency compliance option for web coating/printing operations (§63.4291(a)(2), (3), or (4)), or the emission rate without add-on controls or the emission rate with add-on controls compliance option for dyeing/finishing operations (§63.4291(c)(2) or (c)(3)), the calculation results for each compliance period ending each month during the 6-month reporting period.

(4) *No deviations.* If there were no deviations from the emission limitations in Table 1 to this subpart and §§63.4292, and 63.4293 that apply to you, the semiannual compliance report must include a statement that there were no deviations from the emission limitations during the reporting period. If you use the emission rate with add-on controls option, the organic HAP overall control efficiency option, or the oxidizer outlet organic HAP concentration option and there were no periods during which the continuous parameter monitoring systems (CPMS) were out-of-control as specified in §63.8(c)(7), the semiannual compliance report must include a statement that there were no periods during which the CPMS were out-of-control during the reporting period.

(5) *Deviations: Compliant material option.* If you use the compliant material option, and there was a deviation from the applicable organic HAP content requirements in Table 1 to this subpart, the semiannual compliance report must contain the information in paragraph (a)(5)(i) or (ii) of this section, as applicable.

(i) Before September 12, 2019, the information in paragraph (a)(5)(i)(A) through (D) of this section.

(A) Identification of each coating, printing, slashing, dyeing or finishing material applied that deviated from the emission limit and each thinning or cleaning material applied in web coating/printing operations that contained organic HAP, and the dates and time periods each was applied.

(B) The calculation of the organic HAP content using Equation 1 of §63.4321 for each coating or printing material identified in paragraph (a)(5)(i)(A) of this section. You do not need to submit background data supporting this calculation (*e.g.*, information provided by material suppliers or manufacturers, or test reports).

(C) The determination of mass fraction of organic HAP for each regulated material identified in paragraph (a)(5)(i)(A) of this section. You do not need to submit background data supporting this calculation (*e.g.*, information provided by material suppliers or manufacturers, or test reports).

(D) A statement of the cause of each deviation.

(ii) On and after September 12, 2019, the information in paragraphs (a)(5)(ii)(A) through (E) of this section.

(A) Identification of each coating, printing, slashing, dyeing or finishing material applied that deviated from the emission limit and each thinning

sfrattini on LAPJZKW1R2 with $$_JOB
VerDate Sep<11>2014 09:16 Apr 04, 2023 Jkt 256165 PO 00000 Frm 00863 Fmt 8010 Sfmt 8010 Q:\40\256165.XXX PC31

or cleaning material applied in web coating/printing operations that contained organic HAP, and the date, time, and duration each was applied.

(B) The calculation of the organic HAP content using Equation 1 of § 63.4321 for each coating or printing material identified in paragraph (a)(5)(ii)(A) of this section. You do not need to submit background data supporting this calculation (*e.g.*, information provided by material suppliers or manufacturers, or test reports).

(C) The determination of mass fraction of organic HAP for each regulated material identified in paragraph (a)(5)(ii)(A) of this section. You do not need to submit background data supporting this calculation (*e.g.*, information provided by material suppliers or manufacturers, or test reports).

(D) A statement of the cause of each deviation (including unknown cause, if applicable).

(E) The number of deviations and, for each deviation, a list of the affected source or equipment, an estimate of the quantity of each regulated pollutant emitted over any emission limit in Table 1 to this subpart, and a description of the method used to estimate the emissions.

(6) *Deviations: Emission rate without add-on controls option.* If you use the emission rate without add-on controls option and there was a deviation from the applicable emission limit in Table 1 to this subpart, the semiannual compliance report must contain the information in paragraph (a)(6)(i) or (ii) of this section, as applicable.

(i) Before September 12, 2019, the information in paragraphs (a)(6)(i)(A) through (C) of this section.

(A) The beginning and ending dates of each compliance period during which the organic HAP emission rate exceeded the applicable emission limit in Table 1 to this subpart.

(B) The calculations used to determine the organic HAP emission rate for the compliance period in which the deviation occurred. You must submit the calculations for Equations 1, 1A and 1B, 2, and 3 in § 63.4331 for web coating/printing operations; and for Equations 4, 4A, 5, and 6 in § 63.4331 for dyeing/finishing operations; and if applicable, the calculation used to determine mass of organic HAP in waste materials according to § 63.4331(a)(4)(iii) or (b)(3)(ii); and, for dyeing/finishing operations, if applicable, the mass of organic HAP in wastewater streams calculation for Equation 7 in § 63.4331. You do not need to submit background data supporting these calculations (*e.g.*, information provided by materials suppliers or manufacturers, or test reports).

(C) A statement of the cause of each deviation.

(ii) On and after September 12, 2019, the information in paragraphs (a)(6)(ii)(A) through (D) of this section.

(A) The beginning and ending dates of each compliance period, during which the organic HAP emission rate exceeded the applicable emission limit in Table 1 to this subpart.

(B) The calculations used to determine the organic HAP emission rate for the compliance period in which the deviation occurred. You must submit the calculations for Equations 1, 1A and 1B, 2, and 3 in § 63.4331 for web coating/printing operations; and for Equations 4, 4A, 5, and 6 in § 63.4331 for dyeing/finishing operations; and if applicable, the calculation used to determine mass of organic HAP in waste materials according to § 63.4331(a)(4)(iii) or (b)(3)(ii); and, for dyeing/finishing operations, if applicable, the mass of organic HAP in wastewater streams calculation for Equation 7 in § 63.4331. You do not need to submit background data supporting these calculations (*e.g.*, information provided by materials suppliers or manufacturers, or test reports).

(C) A statement of the cause of each deviation (including unknown cause, if applicable).

(D) The number of deviations, a list of the affected source or equipment, an estimate of the quantity of each regulated pollutant emitted over any emission limit in Table 1 to this subpart, and a description of the method used to estimate the emissions.

(7) *Deviations: Add-on controls options.* If you use one of the add-on controls options in § 63.4291(a) or (c) and there was a deviation from an emission limitation (including any periods when emissions bypassed the add-on control

sfrattini on LAPJZKW1R2 with $$_JOB
VerDate Sep<11>2014 09:16 Apr 04, 2023 Jkt 256165 PO 00000 Frm 00864 Fmt 8010 Sfmt 8010 Q:\40\256165.XXX PC31

device and were diverted to the atmosphere), the semiannual compliance report must contain the information in paragraph (a)(7)(i) or (ii) of this section, as applicable.

(i) Before September 12, 2019, the information in paragraphs (a)(7)(i)(A) through (O) of this section. This includes periods of startup, shutdown, and malfunction during which deviations occurred.

(A) The beginning and ending dates of each compliance period during which the organic HAP emission rate exceeded the applicable emission limit in Table 1 to this subpart.

(B) If you use the emission rate option, the calculations used to determine the organic HAP emission rate for each compliance period in which a deviation occurred. You must submit the calculations that apply to you, including Equations 1, 1A, 1B, and 2 of §63.4331 and Equations 1, 1A, 1B, 1C, 2, 3, 3A and 3B and 4 of §63.4341 for web coating/printing operations; and Equations 4, 4A, 5, 6, and 7 of §63.4331 and Equations 5, 5A, 5B, 6, 7, and 8 of §63.4341 for dyeing/finishing operations. You do not need to submit the background data supporting these calculations (*e.g.*, information provided by materials suppliers or manufacturers, or test reports).

(C) If you use the organic HAP overall control efficiency option, the calculations used to determine the organic HAP overall control efficiency for each compliance period in which a deviation occurred. You must submit the calculations that apply to you, including Equations 1, 1A, and 1B of §63.4331; Equations 1, 1A, 1B, 1C, 2, 3, 3A, and 3B of §63.4341; and Equation 1 of §63.4351. You do not need to submit the background data supporting these calculations (*e.g.*, test reports).

(D) The date and time that each malfunction started and stopped.

(E) A brief description of the CPMS.

(F) The date of the latest CPMS certification or audit.

(G) The date and time that each CPMS was inoperative, except for zero (low-level) and high-level checks.

(H) The date, time, and duration that each CPMS was out-of-control, including the information in §63.8(c)(8).

(I) The date and time period of each deviation from an operating limit in table 2 to this subpart, date and time period of any bypass of the add-on control device, and whether each deviation occurred during a period of startup, shutdown, or malfunction or during another period.

(J) A summary of the total duration of each deviation from an operating limit in table 2 to this subpart and each bypass of the add-on control device during the semiannual reporting period and the total duration as a percent of the total source operating time during that semiannual reporting period.

(K) A breakdown of the total duration of the deviations from the operating limits in Table 2 to this subpart and bypasses of the add-on control device during the semiannual reporting period into those that were due to startup, shutdown, control equipment problems, process problems, other known causes, and other unknown causes.

(L) A summary of the total duration of CPMS downtime during the semiannual reporting period and the total duration of CPMS downtime as a percent of the total source operating time during that semiannual reporting period.

(M) A description of any changes in the CPMS, web coating/printing or dyeing/finishing operation, emission capture system, or add-on control device since the last semiannual reporting period.

(N) For each deviation from the work practice standards, a description of the deviation, the date and time period duration of the deviation, and the actions you took to correct the deviation.

(O) A statement of the cause of each deviation.

(ii) On and after September 12, 2019, the information in paragraphs (a)(7)(ii)(A) through (M), (O), and (P) of this section if there was a deviation from the applicable emission limit in Table 1 to this subpart or the applicable operating limit(s) in Table 2 to this subpart (including any periods when emissions bypassed the add-on control device and were diverted to the atmosphere), and the information in paragraph (a)(7)(ii)(N) of this section if

sfrattini on LAPJZKW1R2 with $$_JOB
VerDate Sep<11>2014 09:16 Apr 04, 2023 Jkt 256165 PO 00000 Frm 00865 Fmt 8010 Sfmt 8010 Q:\40\256165.XXX PC31

there was a deviation from the applicable work practice standards in § 63.4293(b).

(A) The beginning and ending dates of each compliance period during which the organic HAP emission rate exceeded the applicable emission limit in Table 1 to this subpart.

(B) If you use the emission rate option, the calculations used to determine the organic HAP emission rate for each compliance period in which a deviation occurred. You must submit the calculations that apply to you, including Equations 1, 1A, 1B, and 2 of § 63.4331 and Equations 1, 1A, 1B, 1C, 2, 3, 3A and 3B and 4 of § 63.4341 for web coating/printing operations; and Equations 4, 4A, 5, 6, and 7 of § 63.4331 and Equations 5, 5A, 5B, 6, 7, and 8 of § 63.4341 for dyeing/finishing operations. You do not need to submit the background data supporting these calculations (*e.g.*, information provided by materials suppliers or manufacturers, or test reports).

(C) If you use the organic HAP overall control efficiency option, the calculations used to determine the organic HAP overall control efficiency for each compliance period in which a deviation occurred. You must submit the calculations that apply to you, including Equations 1, 1A, and 1B of § 63.4331; Equations 1, 1A, 1B, 1C, 2, 3, 3A, and 3B of § 63.4341; and Equation 1 of § 63.4351. You do not need to submit the background data supporting these calculations (*e.g.*, test reports).

(D) The date and time that each malfunction of the capture system or add-on control devices started and stopped.

(E) A brief description of the CPMS.

(F) The date of the latest CPMS certification or audit.

(G) For each instance that the CPMS was inoperative, except for zero (low-level) and high-level checks, the date, time, and duration that the CPMS was inoperative; the cause (including unknown cause) for the CPMS being inoperative; and descriptions of corrective actions taken.

(H) For each instance that the CPMS was out-of-control, as specified in § 63.8(c)(7), the date, time, and duration that the CPMS was out-of-control; the cause (including unknown cause) for the CPMS being out-of-control; and descriptions of corrective actions taken.

(I) The date, time, and duration of each deviation from an operating limit in Table 2 to this subpart, and the date, time, and duration of any bypass of the add-on control device.

(J) A summary of the total duration of each deviation from an operating limit in Table 2 to this subpart and each bypass of the add-on control device during the semiannual reporting period and the total duration as a percent of the total source operating time during that semiannual reporting period.

(K) A breakdown of the total duration of the deviations from the operating limits in Table 2 to this subpart and bypasses of the add-on control device during the semiannual reporting period into those that were due to control equipment problems, process problems, other known causes, and other unknown causes.

(L) A summary of the total duration of CPMS downtime during the semiannual reporting period and the total duration of CPMS downtime as a percent of the total source operating time during that semiannual reporting period.

(M) A description of any changes in the CPMS, web coating/printing or dyeing/finishing operation, emission capture system, or add-on control device since the last semiannual reporting period.

(N) For deviations from the work practice standards, the number of deviations, and, for each deviation, a description of the deviation; the date, time, and duration of the deviation; and the actions you took to minimize emissions in accordance with § 63.4300(b). The description of the deviation must include a list of the affected sources or equipment for which the deviation occurred and the cause of the deviation (including unknown cause, if applicable).

(O) For deviations from an emission limit in Table 1 to this subpart or operating limit in Table 2 to this subpart, a statement of the cause of each deviation (including unknown cause, if applicable).

(P) For each deviation from an emission limit in Table 1 to this subpart or

sfrattini on LAPJZKW1R2 with $$_JOB
VerDate Sep<11>2014 09:16 Apr 04, 2023 Jkt 256165 PO 00000 Frm 00866 Fmt 8010 Sfmt 8010 Q:\40\256165.XXX PC31

operating limit in Table 2 to this subpart, a list of the affected sources or equipment for which a deviation occurred, an estimate of the quantity of each regulated pollutant emitted over any emission limit in Table 1 to this subpart, and a description of the method used to estimate the emissions.

(8) *Deviations: Equivalent Emission Rate Option*. If you use the equivalent emission rate option, and there was a deviation from the operating scenarios, as defined in §63.4371, used to demonstrate initial compliance, the semiannual compliance report must contain the information in paragraphs (a)(8)(i) through (iv) of this section.

(i) Before September 12, 2019, the beginning and ending dates of each compliance period during which the deviation occurred. On and after September 12, 2019, the beginning and ending dates of each compliance period during which the deviation occurred, the number of deviations during the compliance period, and, for each deviation, the date, time, and duration of the deviation; a list of the affected sources or equipment; and a statement of the cause of the deviation (including an unknown cause, if applicable).

(ii) If the deviation consisted of failure to treat the organic HAP containing wastewater by a biological treatment process, an explanation of the deviation, the duration of the deviation, and the determination of the mass of organic HAP that was discharged in the wastewater that was not treated by a biological treatment process.

(iii) The determination of the fraction of organic HAP applied in your dyeing/finishing affected source that is discharged to the wastewater according to §63.4331(d).

(iv) The calculation of the total organic HAP emissions from your dyeing/finishing affected source using Equation 4 of §63.4331.

(b) *Performance test reports*. If you use one of the add-on control options in §63.4291(a) or (c), you must submit reports of performance test results for emission capture systems and add-on control devices no later than 60 days after completing the tests as specified in §63.10(d)(2).

(c) Before September 12, 2019, if you use one of the add-on control options in §63.4291(a) or (c) and you have a startup, shutdown, or malfunction during the semiannual reporting period, you must submit the reports specified in paragraphs (c)(1) and (2) of this section. The reports specified in paragraphs (c)(1) and (2) of this section are not required on and after September 12, 2019.

(1) If your actions were consistent with your startup, shutdown, and malfunction plan, you must include the information specified in §63.10(d) in the semiannual compliance report.

(2) If your actions were not consistent with your startup, shutdown, and malfunction plan, you must submit an immediate startup, shutdown, and malfunction report as described in paragraphs (c)(2)(i) and (ii) of this section as required by paragraph (a) of this section.

(i) You must describe the actions taken during the event in a report delivered by facsimile, telephone, or other means to the Administrator within 2 working days after starting actions that are inconsistent with the plan.

(ii) You must submit a letter to the Administrator within 7 working days after the end of the event, unless you have made alternative arrangements with the Administrator as specified in §63.10(d)(5)(ii). The letter must contain the information specified in §63.10(d)(5)(ii).

(d) Beginning no later than June 13, 2019, you must submit the results of the performance test required in paragraph (b) of this section following the procedure specified in paragraphs (d)(1) through (3) of this section.

(1) For data collected using test methods supported by the EPA's Electronic Reporting Tool (ERT) as listed on the EPA's ERT website (*https://www.epa.gov/electronic-reporting-air-emissions/electronic-reporting-tool-ert*) at the time of the test, you must submit the results of the performance test to the EPA via the Compliance and Emissions Data Reporting Interface (CEDRI). The CEDRI interface can be accessed through the EPA's Central Data Exchange (CDX) (*https://cdx.epa.gov/*). Performance test data

sfrattini on LAPJZKW1R2 with $$_JOB
VerDate Sep<11>2014 09:16 Apr 04, 2023 Jkt 256165 PO 00000 Frm 00867 Fmt 8010 Sfmt 8010 Q:\40\256165.XXX PC31

must be submitted in a file format generated through the use of the EPA's ERT or an alternate electronic file format consistent with the extensible markup language (XML) schema listed on the EPA's ERT website.

(2) For data collected using test methods that are not supported by the EPA's ERT as listed on the EPA's ERT website at the time of the test, you must submit the results of the performance test to the Administrator at the appropriate address listed in § 63.13, unless the Administrator agrees to or specifies an alternate reporting method.

(3) If you claim that some of the performance test information being submitted under paragraph (d)(1) of this section is confidential business information (CBI), you must submit a complete file generated through the use of the EPA's ERT or an alternate electronic file consistent with the XML schema listed on the EPA's ERT website, including information claimed to be CBI, on a compact disc, flash drive, or other commonly used electronic storage medium to the EPA. The electronic medium must be clearly marked as CBI and mailed to U.S. EPA/OAPQS/CORE CBI Office, Attention: Group Leader, Measurement Policy Group, MD C404–02, 4930 Old Page Rd., Durham, NC 27703. The same ERT or alternate file with the CBI omitted must be submitted to the EPA via the EPA's CDX as described in paragraph (d)(1) of this section.

(e) Beginning on March 15, 2021, the owner or operator shall submit the initial notifications required in § 63.9(b) and the notification of compliance status required in § 63.9(h) and § 63.4310(c) to the EPA via CEDRI. The CEDRI interface can be accessed through the EPA's CDX (*https://cdx.epa.gov*). The owner or operator must upload to CEDRI an electronic copy of each applicable notification in portable document format (PDF). The applicable notification must be submitted by the deadline specified in this subpart, regardless of the method in which the reports are submitted. Owners or operators who claim that some of the information required to be submitted via CEDRI is CBI shall submit a complete report generated using the appropriate form in CEDRI or an alternate electronic file consistent with the extensible markup language (XML) schema listed on the EPA's CEDRI website, including information claimed to be CBI, on a compact disc, flash drive, or other commonly used electronic storage medium to the EPA. The electronic medium shall be clearly marked as CBI and mailed to U.S. EPA/OAQPS/CORE CBI Office, Attention: Group Leader, Measurement Policy Group, MD C404–02, 4930 Old Page Rd., Durham, NC 27703. The same file with the CBI omitted shall be submitted to the EPA via the EPA's CDX as described earlier in this paragraph.

(f) Beginning on March 15, 2021, or once the reporting template has been available on the CEDRI website for 1 year, whichever date is later, the owner or operator shall submit the semiannual compliance report required in paragraph (a) of this section to the EPA via CEDRI. The CEDRI interface can be accessed through the EPA's CDX (*https://cdx.epa.gov*). The owner or operator must use the appropriate electronic template on the CEDRI website for this subpart or an alternate electronic file format consistent with the XML schema listed on the CEDRI website (*https://www.epa.gov/electronic-reporting-air-emissions/compliance-and-emissions-data-reporting-interface-cedri*). The date report templates become available will be listed on the CEDRI website. If the reporting form for the semiannual compliance report specific to this subpart is not available in CEDRI at the time that the report is due, you must submit the report to the Administrator at the appropriate addresses listed in § 63.13. Once the form has been available in CEDRI for 1 year, you must begin submitting all subsequent reports via CEDRI. The reports must be submitted by the deadlines specified in this subpart, regardless of the method in which the reports are submitted. Owners or operators who claim that some of the information required to be submitted via CEDRI is CBI shall submit a complete report generated using the appropriate form in CEDRI or an alternate electronic file consistent with the XML schema listed on the EPA's CEDRI website, including information claimed to be CBI,

sfrattini on LAPJZKW1R2 with $$_JOB
VerDate Sep<11>2014 09:16 Apr 04, 2023 Jkt 256165 PO 00000 Frm 00868 Fmt 8010 Sfmt 8010 Q:\40\256165.XXX PC31

on a compact disc, flash drive, or other commonly used electronic storage medium to the EPA. The electronic medium shall be clearly marked as CBI and mailed to U.S. EPA/OAQPS/CORE CBI Office, Attention: Group Leader, Measurement Policy Group, MD C404–02, 4930 Old Page Rd., Durham, NC 27703. The same file with the CBI omitted shall be submitted to the EPA via the EPA's CDX as described earlier in this paragraph.

(g) If you are required to electronically submit a report through CEDRI in the EPA's CDX, and due to a planned or actual outage of either the EPA's CEDRI or CDX systems within the period of time beginning 5 business days prior to the date that the submission is due, you will be or are precluded from accessing CEDRI or CDX and submitting a required report within the time prescribed, you may assert a claim of EPA system outage for failure to timely comply with the reporting requirement. You must submit notification to the Administrator in writing as soon as possible following the date you first knew, or through due diligence should have known, that the event may cause or caused a delay in reporting. You must provide to the Administrator a written description identifying the date, time and length of the outage; a rationale for attributing the delay in reporting beyond the regulatory deadline to the EPA system outage; describe the measures taken or to be taken to minimize the delay in reporting; and identify a date by which you propose to report, or if you have already met the reporting requirement at the time of the notification, the date you reported. In any circumstance, the report must be submitted electronically as soon as possible after the outage is resolved. The decision to accept the claim of EPA system outage and allow an extension to the reporting deadline is solely within the discretion of the Administrator.

(h) If you are required to electronically submit a report through CEDRI in the EPA's CDX and a force majeure event is about to occur, occurs, or has occurred or there are lingering effects from such an event within the period of time beginning 5 business days prior to the date the submission is due, the owner or operator may assert a claim of force majeure for failure to timely comply with the reporting requirement. For the purposes of this section, a force majeure event is defined as an event that will be or has been caused by circumstances beyond the control of the affected facility, its contractors, or any entity controlled by the affected facility that prevents you from complying with the requirement to submit a report electronically within the time period prescribed. Examples of such events are acts of nature *(e.g.*, hurricanes, earthquakes, or floods), acts of war or terrorism, or equipment failure or safety hazard beyond the control of the affected facility (*e.g.*, large scale power outage). If you intend to assert a claim of force majeure, you must submit notification to the Administrator in writing as soon as possible following the date you first knew, or through due diligence should have known, that the event may cause or caused a delay in reporting. You must provide to the Administrator a written description of the force majeure event and a rationale for attributing the delay in reporting beyond the regulatory deadline to the force majeure event; describe the measures taken or to be taken to minimize the delay in reporting; and identify a date by which you propose to report, or if you have already met the reporting requirement at the time of the notification, the date you reported. In any circumstance, the reporting must occur as soon as possible after the force majeure event occurs. The decision to accept the claim of force majeure and allow an extension to the reporting deadline is solely within the discretion of the Administrator.

[68 FR 32189, May 29, 2003, as amended at 84 FR 9623, Mar. 15, 2019]

§63.4312 What records must I keep?

You must collect and keep a record of the data and information specified in this section. Failure to collect and keep these records is a deviation from the applicable standard.

(a) A copy of each notification and report that you submitted to comply with this subpart, and the documentation supporting each notification and report.

sfrattini on LAPJZKW1R2 with $$_JOB
VerDate Sep<11>2014 09:16 Apr 04, 2023 Jkt 256165 PO 00000 Frm 00869 Fmt 8010 Sfmt 8010 Q:\40\256165.XXX PC31

(b) A current copy of information provided by materials suppliers or manufacturers, such as manufacturer's formulation data or test data used to determine the mass fraction of organic HAP for coating, printing, slashing, dyeing, finishing, thinning, and cleaning materials; and the mass fraction of solids for coating and printing materials. If you conducted testing to determine mass fraction of organic HAP of coating materials or the mass fraction of solids of coating materials, you must keep a copy of the complete test report. If you use information provided to you by the manufacturer or supplier of the material that was based on testing, you must keep the summary sheet of results provided to you by the manufacturer or supplier. You are not required to obtain the test report or other supporting documentation from the manufacturer or supplier.

(c) For each compliance period, the records specified in paragraph (c)(1) of this section for web coating/printing operations and the records specified in paragraph (c)(2) of this section for dyeing/finishing operations.

(1) A record of the web coating/printing operations on which you used each compliance option and the time periods (beginning and ending dates) you used each option. For each month, a record of all required calculations for the compliance option(s) you used, as specified in paragraphs (c)(1)(i) through (iv) of this section.

(i) For the compliant material option, a record of the calculation of the organic HAP content, as purchased, for each coating and printing material applied, using Equation 1 of § 63.4321.

(ii) For the emission rate without add-on controls option, a record of the calculation of the total mass of organic HAP emissions for the coating, printing, thinning and cleaning materials applied each compliance period using Equations 1, 1A, and 1B of § 63.4331 and, if applicable, the calculation used to determine the mass of organic HAP in waste materials according to § 63.4331(a)(4)(iii); the calculation of the total mass of the solids contained in all coating and printing materials applied each compliance period using Equation 2 of § 63.4331; and the calculation of the organic HAP emission rate for each compliance period using Equation 3 of § 63.4331.

(iii) For the emission rate with add-on controls option, a record of the calculation of the total mass of organic HAP emissions before add-on controls for the coating, printing, thinning and cleaning materials applied each compliance period using Equations 1, 1A, and 1B of § 63.4331 and, if applicable, the calculation used to determine the mass of organic HAP in waste materials according to § 63.4331(a)(4)(iii); the calculation of the total mass of the solids contained in all coating and printing materials applied each compliance period using Equation 2 of § 63.4331; the calculation of the mass of organic HAP emission reduction by emission capture systems and add-on control devices using Equations 1, 1A, 1B, and 1C of § 63.4341 and Equations 2, 3, 3A, and 3B of § 63.4341, as applicable; and the calculation of the organic HAP emission rate for each compliance period using Equation 4 of § 63.4341.

(iv) For the organic HAP overall control efficiency option or the oxidizer outlet organic HAP concentration option, the records specified in paragraph (j) of this section.

(2) A record of the dyeing/finishing operations on which you used each compliance option and the time periods (beginning and ending dates) you used each option. For each month, a record of all required calculations for the compliance option(s) you used, as specified in paragraphs (c)(2)(i) through (iv) of this section.

(i) For the compliant material option, a purchase record of the mass fraction of organic HAP for each dyeing, and finishing material applied, according to § 63.4321(e)(1)(iv).

(ii) For the emission rate without add-on controls option, the calculation for the total mass of organic HAP emissions for the dyeing and finishing materials applied each compliance period using Equations 4 and 4A of § 63.4331 and, if applicable, the calculations used to determine the mass of organic HAP in waste materials according to § 63.4331(b)(3)(ii) and the mass of organic HAP contained in wastewater discharged to a POTW or treated onsite prior to discharge according to § 63.4331(b)(3)(iii); the calculation of the

sfrattini on LAPJZKW1R2 with $$_JOB
VerDate Sep<11>2014 09:16 Apr 04, 2023 Jkt 256165 PO 00000 Frm 00870 Fmt 8010 Sfmt 8010 Q:\40\256165.XXX PC31

total mass of dyeing and finishing materials applied each compliance period using Equation 5 of §63.4331; and the calculation of the organic HAP emission rate for each compliance period using Equation 6 of §63.4331.

(iii) For the emission rate with add-on controls option, a record of the calculation of the total mass of organic HAP emissions before add-on controls for the dyeing and finishing materials applied each compliance period using Equations 4 and 4A of §63.4331 and, if applicable, the calculation used to determine the mass of organic HAP in waste materials according to §63.4331(b)(3)(ii) and the determination of the mass of organic HAP contained in wastewater discharged to a POTW or treated onsite prior to discharge according to §63.4331(b)(3)(iii); the calculation of the total mass of dyeing and finishing materials applied each compliance period using Equation 5 of §63.4331; the calculation of the mass of organic HAP emission reduction by emission capture systems and add-on control devices using Equations 5, 5A, and 5B of §63.4341 and Equations 6, 7, and 7A of §63.4341, as applicable; and the calculation of the organic HAP emission rate for each compliance period using Equation 8 of §63.4341.

(iv) For the equivalent emission rate option, a record that your dyeing/finishing affected source operated within the operating scenarios used to demonstrate initial compliance, documentation that affected wastewater was either discharged to a POTW or to onsite secondary treatment, and the calculation of the total organic HAP emissions from your dyeing/finishing affected source for each compliance period using Equation 4 of §63.4331.

(d) A record of the name and mass of each regulated material applied in the web coating and printing subcategory and the dyeing and finishing subcategory during each compliance period. If you are using the compliant material option for all regulated materials at the source, you may maintain purchase records for each material used rather than a record of the mass used.

(e) A record of the mass fraction of organic HAP for each regulated material applied during each compliance period.

(f) A record of the mass fraction of coating and printing solids for each coating and printing material applied during each compliance period.

(g) If you use an allowance in Equation 1 or 4 of §63.4331 for organic HAP contained in waste materials sent to, or designated for shipment to, a treatment, storage, and disposal facility (TSDF) according to §63.4331(a)(4)(iii) or (b)(3)(ii), you must keep records of the information specified in paragraphs (g)(1) through (3) of this section.

(1) The name and address of each TSDF to which you sent waste materials for which you used an allowance in Equation 1 or 4 of §63.4331, a statement of which subparts under 40 CFR parts 262, 264, 265, and 266 apply to the facility, and the date of each shipment.

(2) Identification of the web coating/printing or dyeing/finishing operations producing waste materials included in each shipment and the compliance period(s) in which you used the allowance for these materials in Equation 1 or 4, respectively, of §63.4331.

(3) The methodology used in accordance with §63.4331(a)(3)(iii) or (b)(4)(ii) to determine the total amount of waste materials sent to or the amount collected, stored, and designated for transport to a TSDF each compliance period; and the methodology to determine the mass of organic HAP contained in these waste materials. This must include the sources for all data used in the determination, methods used to generate the data, frequency of testing or monitoring, and supporting calculations and documentation, including the waste manifest for each shipment.

(h) If you use an allowance in Equation 4 of §63.4331 for organic HAP contained in wastewater discharged to a POTW or treated onsite prior to discharge according to §63.4331(c), you must keep records of the information specified in paragraphs (h)(1) and (2) of this section.

(1) Documentation that the wastewater was either discharged to a POTW or onsite secondary wastewater treatment.

sfrattini on LAPJZKW1R2 with $$_JOB
VerDate Sep<11>2014 09:16 Apr 04, 2023 Jkt 256165 PO 00000 Frm 00871 Fmt 8010 Sfmt 8010 Q:\40\256165.XXX PC31

(2) Calculation of the allowance, WW, using the fraction of organic HAP applied in affected processes that is discharged to the wastewater determined from the most recent performance test and the mass of organic HAP in the dyeing and finishing materials applied during the compliance period, A, calculated in Equation 4 of § 63.4331.

(i) Before September 12, 2019, you must keep records of the date, time, and duration of each deviation. On and after September 12, 2019, for each deviation from an emission limitation reported under § 63.4311(a)(5) through (8), a record of the information specified in paragraphs (i)(1) through (4) of this section, as applicable.

(1) The date, time, and duration of the deviation, as reported under § 63.4311(a)(5) through (8).

(2) A list of the affected sources or equipment for which the deviation occurred and the cause of the deviation, as reported under § 63.4311(a)(5) through (8).

(3) An estimate of the quantity of each regulated pollutant emitted over any applicable emission limit in Table 1 to this subpart or any applicable operating limit in Table 2 to this subpart, and a description of the method used to calculate the estimate, as reported under § 63.4311(a)(5) through (8). If you use the equivalent emission rate option to comply with this subpart, a record of the applicable information specified in § 63.4311(a)(8)(ii) through (iv) satisfies the recordkeeping requirement in this paragraph (i)(3).

(4) A record of actions taken to minimize emissions in accordance with § 63.4300(b) and any corrective actions taken to return the affected unit to its normal or usual manner of operation.

(j) If you use the emission rate with add-on controls option, the organic HAP overall control efficiency option, or the oxidizer outlet organic HAP concentration option, you must also keep the records specified in paragraphs (j)(1) through (8) of this section.

(1) Before September 12, 2019, for each deviation, a record of whether the deviation occurred during a period of startup, shutdown, or malfunction. The record in this paragraph (j)(1) is not required on and after September 12, 2019.

(2) Before September 12, 2019, the records in § 63.6(e)(3)(iii) through (v) related to startup, shutdown, and malfunction. The records in this paragraph (j)(2) are not required on and after September 12, 2019.

(3) The records required to show continuous compliance with each operating limit specified in Table 2 to this subpart that applies to you.

(4) For each capture system that is a PTE, the data and documentation you used to support a determination that the capture system meets the criteria in Method 204 of appendix M to 40 CFR part 51 for a PTE and has a capture efficiency of 100 percent, as specified in § 63.4361(a).

(5) For each capture system that is not a PTE, the data and documentation you used to determine capture efficiency according to the requirements specified in §§ 63.4360 and 63.4361(b) through (e) including the records specified in paragraphs (j)(5)(i) through (iii) of this section that apply to you.

(i) *Records for a liquid-to-fugitive protocol using a temporary total enclosure or building enclosure.* Records of the mass of total volatile hydrocarbon (TVH) as measured by Method 204A or F of appendix M to 40 CFR part 51 for each regulated material applied in the web coating/printing or dyeing/finishing operation, and the total TVH for all materials applied during each capture efficiency test run, including a copy of the test report. Records of the mass of TVH emissions not captured by the capture system that exited the temporary total enclosure or building enclosure during each capture efficiency test run, as measured by Method 204D or E of appendix M to 40 CFR part 51, including a copy of the test report. Records documenting that the enclosure used for the capture efficiency test met the criteria in Method 204 of appendix M to 40 CFR part 51 for either a temporary total enclosure or a building enclosure.

(ii) *Records for a gas-to-gas protocol using a temporary total enclosure or a building enclosure.* Records of the mass of TVH emissions captured by the emission capture system as measured by Method 204B or C of appendix M to 40 CFR part 51 at the inlet to the add-on control device, including a copy of

sfrattini on LAPJZKW1R2 with $$_JOB
VerDate Sep<11>2014 09:16 Apr 04, 2023 Jkt 256165 PO 00000 Frm 00872 Fmt 8010 Sfmt 8010 Q:\40\256165.XXX PC31

the test report. Records of the mass of TVH emissions not captured by the capture system that exited the temporary total enclosure or building enclosure during each capture efficiency test run as measured by Method 204D or E of appendix M to 40 CFR part 51, including a copy of the test report. Records documenting that the enclosure used for the capture efficiency test met the criteria in Method 204 of appendix M to 40 CFR part 51 for either a temporary total enclosure or a building enclosure.

(iii) *Records for an alternative protocol.* Records needed to document a capture efficiency determination using an alternative method or protocol as specified in § 63.4361(e), if applicable.

(6) The records specified in paragraphs (j)(6)(i) and (ii) of this section for each add-on control device organic HAP destruction or removal efficiency determination or oxidizer outlet organic HAP concentration determination as specified in § 63.4362.

(i) Records of each add-on control device performance test conducted according to §§ 63.4360 and 63.4362.

(ii) Records of the web coating/printing or dyeing/finishing operation conditions during the add-on control device performance test showing that the performance test was conducted under representative operating conditions.

(7) Records of the data and calculations you used to establish the emission capture and add-on control device operating limits as specified in § 63.4363 and to document compliance with the operating limits as specified in Table 2 to this subpart.

(8) A record of the work practice plan required by § 63.4293 and documentation that you are implementing the plan on a continuous basis.

[68 FR 32189, May 29, 2003, as amended at 84 FR 9626, Mar. 15, 2019]

§ 63.4313 In what form and for how long must I keep my records?

(a) Your records must be in a form suitable and readily available for expeditious review, according to § 63.10(b)(1). Where appropriate, the records may be maintained as electronic spreadsheets or as a database. Any records required to be maintained by this subpart that are in reports that were submitted electronically via the EPA's CEDRI may be maintained in electronic format. This ability to maintain electronic copies does not affect the requirement for facilities to make records, data, and reports available upon request to a delegated air agency or the EPA as part of an on-site compliance evaluation.

(b) As specified in § 63.10(b)(1), you must keep each record for 5 years following the date of each occurrence, measurement, maintenance, corrective action, report, or record.

(c) You must keep each record on site for at least 2 years after the date of each occurrence, measurement, maintenance, corrective action, report, or record, according to § 63.10(b)(1). You may keep the records off site for the remaining 3 years.

[68 FR 32189, May 29, 2003, as amended at 84 FR 9627, Mar. 15, 2019]

COMPLIANCE REQUIREMENTS FOR THE COMPLIANT MATERIAL OPTION

§ 63.4320 By what date must I conduct the initial compliance demonstration?

You must complete the compliance demonstration for the initial compliance period according to the requirements in § 63.4321. The initial compliance period begins on the applicable compliance date specified in § 63.4283 and ends on the last day of the first full month after the compliance date. The initial compliance demonstration includes the calculations according to § 63.4321 and supporting documentation showing that, during the initial compliance period, the organic HAP content of each coating and printing material you applied and the mass fraction of organic HAP in each slashing, dyeing, and finishing material you applied did not exceed the applicable limit in Table 1 to this subpart, and documentation that in web coating/printing operations you applied only thinners and cleaners that contained no organic HAP as defined in § 63.4371.

sfrattini on LAPJZKW1R2 with $$_JOB
VerDate Sep<11>2014 09:16 Apr 04, 2023 Jkt 256165 PO 00000 Frm 00873 Fmt 8010 Sfmt 8010 Q:\40\256165.XXX PC31

§ 63.4321 How do I demonstrate initial compliance with the emission limitations?

(a) You may use the compliant material option for any individual web coating/printing operation, for any group of web coating/printing operations in the affected source, or for all the web coating/printing operations in the affected source. You must use either the emission rate without add-on controls option, the emission rate with add-on controls option, the organic HAP overall control efficiency option, or the oxidizer outlet organic HAP concentration option for any web coating/printing operation(s) in the affected source for which you do not use this option. For a web coating/printing affected source to demonstrate initial compliance using the compliant material option, the web coating/printing operation or group of web coating/printing operations must apply no coating or printing material with an organic HAP content that exceeds the applicable emission limit in Table 1 to this subpart and must apply only thinning or cleaning material that contains no organic HAP, as defined in § 63.4371.

(b) You must use the compliant material option for each slashing affected source, as required in Table 1 to this subpart. For a slashing affected source to demonstrate initial compliance using the compliant material option, the slashing operation or group of slashing operations must apply only slashing material with no organic HAP as defined in § 63.4371.

(c) You may use the compliant material option for any individual dyeing/finishing operation, for any group of dyeing/finishing operations in the affected source, or for all the dyeing/finishing operations in the affected source. You must use either the emission rate without add-on controls option or the emission rate with add-on controls option for any dyeing/finishing operations in the affected source for which you do not use this option. You may not use the compliant material option for any dyeing/finishing operation in a dyeing/finishing affected source for which you use the equivalent emission rate option. For a dyeing/finishing affected source to demonstrate initial compliance using the compliant material option, the dyeing/finishing operation or group of dyeing/finishing operations must apply no dyeing or finishing material with a mass fraction of organic HAP that exceeds the applicable emission limit in Table 1 to this subpart.

(d) Any web coating/printing operation, slashing operation, or dyeing/finishing operation for which you use the compliant material option is not required to meet the operating limits or work practice standards required in §§ 63.4292 and 63.4293, respectively.

(e) To demonstrate initial compliance with the emission limitations using the compliant material option, you must meet all the requirements of this section for any web coating/printing operation, slashing operation, or dyeing/finishing operation using this option. Use the applicable procedures in this section on each regulated material in the condition it is in when it is received from its manufacturer or supplier and prior to any alteration. You do not need to redetermine the organic HAP content of regulated materials that are reclaimed onsite and reused in the web coating/printing operation, slashing operation, or dyeing/finishing operation for which you use the compliant material option, provided these regulated materials in their condition as received were demonstrated to comply with the compliant material option.

(1) *Determine the mass fraction of organic HAP for each material.* You must determine the mass fraction of organic HAP for each regulated material applied during the compliance period by using one of the options in paragraphs (e)(1)(i) through (v) of this section. You must use the option in paragraph (e)(1)(iv) of this section for each printing, slashing, dyeing, or finishing material applied during the compliance period.

(i) *Method 311 (appendix A to 40 CFR part 63).* You may use Method 311 for determining the mass fraction of organic HAP. Use the procedures specified in paragraphs (e)(1)(i)(A) and (B) of this section when performing a Method 311 test.

(A) Count each organic HAP in Table 6 to this subpart that is measured to be present at 0.1 percent by mass or more

sfrattini on LAPJZKW1R2 with $$_JOB
VerDate Sep<11>2014 09:16 Apr 04, 2023 Jkt 256165 PO 00000 Frm 00874 Fmt 8010 Sfmt 8010 Q:\40\256165.XXX PC31

and at 1.0 percent by mass or more for other compounds. For example, if toluene (not listed in Table 6 to this subpart) is measured to be 0.5 percent of the material by mass, you don't have to count it. Express the mass fraction of each organic HAP you count as a value truncated to no more than four places after the decimal point (*e.g.*, 0.3791).

(B) Calculate the total mass fraction of organic HAP in the regulated material being tested by adding up the individual organic HAP mass fractions and truncating the result to no more than three places after the decimal point (*e.g.*, 0.763).

(ii) *Method 24 in appendix A–7 of part 60*. You may use Method 24 to determine the mass fraction of nonaqueous volatile matter and use that value as a substitute for mass fraction of organic HAP. As an alternative to using Method 24, you may use ASTM D2369–10 (R2015), ''Test Method for Volatile Content of Coatings'' (incorporated by reference, *see* §63.14). For a multi-component coating with reactive chemicals, you may use Method 24 or ASTM D2369–10 (R2015) on the coating as applied to determine the mass fraction of nonaqueous volatile matter and use that value as a substitute for the mass fraction of organic HAP determined from the sum of organic HAP in each component.

(iii) *Alternative method*. You may use an alternative test method for determining the mass fraction of organic HAP, mass fraction of solids, or fraction of organic HAP emitted from a reactive coating once the Administrator has approved it. You must follow the procedure in §63.7(f) to submit an alternative test method for approval.

(iv) *Information from the supplier or manufacturer of the material*. You may rely on information other than that generated by the test methods specified in paragraphs (e)(1)(i) through (iii) of this section, such as manufacturer's formulation data, if it represents each organic HAP in Table 6 to this subpart that is present at 0.1 percent by mass or more and at 1.0 percent by mass or more for other compounds. For example, if toluene (not listed in Table 6 to this subpart) is 0.5 percent of the material by mass, you do not have to count it. If there is a disagreement between such information and results of a test conducted according to paragraphs (e)(1)(i) through (iii) of this section on coating, thinning, or cleaning material, then the test method results will take precedence. Information from the supplier or manufacturer of the printing, slashing, dyeing, or finishing material is sufficient for determining the mass fraction of organic HAP.

(v) *Solvent blends*. Solvent blends may be listed as single components for some materials in data provided by manufacturers or suppliers. Solvent blends may contain organic HAP which must be counted toward the total organic HAP mass fraction of the materials. When test data and manufacturer's data for solvent blends are not available, you may use the default values for the mass fraction of organic HAP in these solvent blends listed in Table 4 or 5 to this subpart. If you use the tables, you must use the values in Table 4 for all solvent blends that match Table 4 entries, and you may only use Table 5 if the solvent blends in the materials you use do not match any of the solvent blends in Table 4 and you only know whether the blend is aliphatic or aromatic. However, if the results of a Method 311 test indicate higher values than those listed on Table 4 or 5 to this subpart, the Method 311 results will take precedence.

(2) *Determine the mass fraction of solids for each coating and printing material*. You must determine the mass fraction of solids (kg of solids per kg of coating or printing material) for each coating material applied during the compliance period by a test or by information provided by the supplier or the manufacturer of the material, as specified in paragraphs (e)(2)(i) through (iii) of this section. If test results obtained according to paragraph (e)(2)(i) or (ii) of this section for a coating material do not agree with the information obtained under paragraph (e)(2)(iii) of this section, the test results will take precedence. To determine mass fraction of solids for each printing material applied during the compliance period, you should use information provided by the supplier or manufacturer of the material, as specified in paragraph (e)(2)(iii) of this section.

sfrattini on LAPJZKW1R2 with $$_JOB
VerDate Sep<11>2014 09:16 Apr 04, 2023 Jkt 256165 PO 00000 Frm 00875 Fmt 8010 Sfmt 8010 Q:\40\256165.XXX PC31

(i) *Method 24 in appendix A–7 of part 60*. You may use Method 24 for determining the mass fraction of solids of coating materials. As an alternative to using Method 24, you may use ASTM D2369–10 (R2015), ''Test Method for Volatile Content of Coatings'' (incorporated by reference, *see* § 63.14).

(ii) *Alternative method*. You may use an alternative test method for determining solids content of each coating material once the Administrator has approved it. You must follow the procedure in § 63.7(f) to submit an alternative test method for approval.

(iii) *Information from the supplier or manufacturer of the material*. You may obtain the mass fraction of solids for each coating and printing material from the supplier or manufacturer. If there is disagreement between such information and the test method results for a coating material, then the test method results will take precedence.

(3) *Calculate the organic HAP content of each coating or printing material*. Calculate the organic HAP content, kg organic HAP per kg of solids, of each coating and printing material applied during the compliance period, using Equation 1 of this section:

$$H_c = (W_c)/(W_f) \qquad \text{(Eq. 1)}$$

Where:

H_c = Organic HAP content of the coating or printing material, kg organic HAP per kg solids in the coating or printing material.

W_c = Mass fraction of organic HAP in the coating or printing material, kg organic HAP per kg material, determined according to paragraph (e)(1) of this section.

W_f = Mass fraction of solids in coating or printing material, kg solids per kg of coating or printing material, determined according to paragraph (e)(2) of this section.

(4) *Compliance demonstration*. The calculated organic HAP content for each coating and printing material applied during the initial compliance period must be less than or equal to the applicable emission limit in Table 1 to this subpart, and each thinning and cleaning material applied during the initial compliance period must contain no organic HAP as defined in § 63.4371. Each slashing material applied during the initial compliance period must contain no organic HAP as defined in § 63.4371. The mass fraction of organic HAP for each dyeing and finishing material applied during the initial compliance period, determined according to paragraph (e)(1)(iv) of this section, must be less than or equal to the applicable emission limit in Table 1 to this subpart. You must keep all records required by §§ 63.4312 and 63.4313. As part of the Notification of Compliance Status required in § 63.4310, you must:

(i) Identify any web coating/printing operation, slashing operation, and dyeing/finishing operation for which you used the compliant material option;

(ii) Submit a statement that the web coating/printing operation(s) was (were) in compliance with the emission limitations during the initial compliance period because you applied no coating and printing material for which the organic HAP content exceeds the applicable emission limit in Table 1 to this subpart, and you applied only thinning materials and cleaning materials that contained no organic HAP, as defined in § 63.4371;

(iii) Submit a statement that the slashing operation(s) was (were) in compliance with the emission limitations during the initial compliance period because you applied only slashing materials that contained no organic HAP, as defined in § 63.4371; and

(iv) Submit a statement that the dyeing/finishing operation(s) was (were) in compliance with the emission limitations during the initial compliance period because you applied no dyeing and finishing material for which the mass fraction of organic HAP exceeds the applicable emission limit in Table 1 to this subpart.

[68 FR 32189, May 29, 2003, as amended at 84 FR 9627, Mar. 15, 2019]

§ 63.4322 How do I demonstrate continuous compliance with the emission limitations?

(a) For each compliance period, to demonstrate continuous compliance, you must apply no coating or printing material for which the organic HAP content determined using Equation 1 of § 63.4321, exceeds the applicable emission limit in Table 1 to this subpart. For each compliance period, to demonstrate continuous compliance, you

sfrattini on LAPJZKW1R2 with $$_JOB
VerDate Sep<11>2014 09:16 Apr 04, 2023 Jkt 256165 PO 00000 Frm 00876 Fmt 8010 Sfmt 8010 Q:\40\256165.XXX PC31
ER29MY03.000<.MATH>

must apply only slashing material that contains no organic HAP as defined in § 63.4371. For each compliance period, to demonstrate continuous compliance, you must apply no dyeing or finishing material for which the mass fraction of organic HAP, determined according to the requirements of § 63.4321(e)(1)(iv), exceeds the applicable emission limit in Table 1 to this subpart. For each compliance period, you must apply only thinning or cleaning materials that contain no organic HAP (as defined in § 63.4371) in a coating/printing affected source. Each month following the initial compliance period described in § 63.4320 is a compliance period.

(b) If you choose to comply with the emission limitations by using the compliant material option, the application of any regulated material that does not meet the criteria specified in paragraph (a) of this section is a deviation from the emission limitations that must be reported as specified in §§ 63.4310(c)(6) and 63.4311(a)(5).

(c) As part of each semiannual compliance report required by § 63.4311, you must identify any web coating/printing operation, slashing operation, or dyeing/finishing operation for which you used the compliant material option. If there were no deviations from the applicable emission limit in Table 1 to this subpart, submit a statement that, as appropriate, the web coating/printing operations were in compliance with the emission limitations during the reporting period because you applied no coating or printing material for which the organic HAP content exceeded the applicable emission limit in Table 1 to this subpart, and you applied only thinning and cleaning materials that contained no organic HAP (as defined in § 63.4371) in a web coating/printing affected source; the slashing operations were in compliance with the emission limitations during the reporting period because you applied only slashing materials with no organic HAP (as defined in § 63.4371) in a slashing affected source; and the dyeing/finishing operations were in compliance with the emission limitations during the reporting period because you applied no dyeing or finishing material for which the mass fraction of organic HAP exceeded the applicable emission limit in Table 1 to this subpart.

(d) You must maintain records as specified in §§ 63.4312 and 63.4313.

COMPLIANCE REQUIREMENTS FOR THE EMISSION RATE WITHOUT ADD-ON CONTROLS OPTION

§ 63.4330 By what date must I conduct the initial compliance demonstration?

You must complete the compliance demonstration for the initial compliance period according to the requirements of § 63.4331. The initial compliance period begins on the applicable compliance date specified in § 63.4283 and ends on the last day of the 12th full month after the compliance date. The initial compliance demonstration includes the calculations according to § 63.4331 and supporting documentation showing that for web coating/printing operations, the organic HAP emission rate for the initial compliance period was equal to or less than the applicable emission limit in Table 1 to this subpart and for dyeing/finishing operations, the mass fraction of organic HAP for the initial compliance period was less than or equal to the applicable emission limit in Table 1 to this subpart.

§ 63.4331 How do I demonstrate initial compliance with the emission limitations?

(a) For web coating/printing operations, you may use the emission rate without add-on controls option for any individual web coating/printing operation, for any group of web coating/printing operations in the affected source, or for all the web coating/printing operations as a group in the affected source. You must use either the compliant material option, the emission rate with add-on controls option, the organic HAP overall control efficiency option, or the oxidizer outlet organic HAP concentration option for any web coating/printing operation in the affected source for which you do not use this option. To demonstrate initial compliance using the emission rate without add-on controls option, the web coating/printing operation or

sfrattini on LAPJZKW1R2 with $$_JOB
VerDate Sep<11>2014 09:16 Apr 04, 2023 Jkt 256165 PO 00000 Frm 00877 Fmt 8010 Sfmt 8010 Q:\40\256165.XXX PC31

group of web coating/printing operations must meet the applicable emission limit in Table 1 to this subpart but is not required to meet the operating limits or work practice standards in §§ 63.4292 and 63.4293, respectively. You must meet all the requirements of paragraphs (a)(1) through (7) of this section to demonstrate initial compliance with the applicable emission limit in Table 1 to this subpart for the web coating/printing operation(s). When calculating the organic HAP emission rate according to this section, do not include any coating, printing, thinning, or cleaning materials applied on web coating/printing operations for which you use the compliant material option, the emission rate with add-on controls option, the organic HAP overall control efficiency option, or the oxidizer outlet organic HAP concentration option. Use the procedures in this section on each regulated material in the condition it is in when it is received from its manufacturer or supplier and prior to any alteration.

(1) *Determine the mass fraction of organic HAP for each material.* Determine the mass fraction of organic HAP for each coating, printing, thinning, and cleaning material applied during the compliance period according to the requirements in § 63.4321(e)(1).

(2) *Determine the mass fraction of solids for each material.* Determine the mass fraction of solids (kg of solids per kg of coating or printing material) for each coating and printing material applied during the compliance period according to the requirements in § 63.4321(e)(2).

(3) *Determine the mass of each material.* Determine the mass (kg) of each coating, printing, thinning, or cleaning material applied during the compliance period by measurement or usage records.

(4) *Calculate the mass of organic HAP emissions.* The mass of organic HAP emissions is the combined mass of organic HAP contained in all coating, printing, thinning, and cleaning materials applied during the compliance period minus the organic HAP in certain waste materials. Calculate the mass of organic HAP emissions using Equation 1 of this section:

$$H_e = A + B - R_w \qquad \text{(Eq. 1)}$$

Where:

H_e = Mass of organic HAP emissions during the compliance period, kg.

A = Total mass of organic HAP in the coating and printing materials applied during the compliance period, kg, as calculated in Equation 1A of this section.

B = Total mass of organic HAP in the thinning and cleaning materials applied during the compliance period, kg, as calculated in Equation 1B of this section.

R_w = Total mass of organic HAP in waste materials sent or designated for shipment to a hazardous waste TSDF for treatment or disposal during the compliance period, kg, determined according to paragraph (a)(4)(iii) of this section. (You may assign a value of zero to R_w if you do not wish to use this allowance.)

(i) Calculate the kg organic HAP in the coating and printing materials applied during the compliance period using Equation 1A of this section:

$$A = \sum_{i=1}^{m} \left(M_{c,i}\right)\left(W_{c,i}\right) \qquad \text{(Eq. 1A)}$$

Where:

A = Total mass of organic HAP in the coating and printing materials applied during the compliance period, kg.

$M_{c,\ i}$ = Total mass of coating or printing material, i, applied during the compliance period, kg.

$W_{c,\ i}$ = Mass fraction of organic HAP in coating or printing material, i, kg organic HAP per kg of material.

m = Number of different coating and printing, materials applied during the compliance period.

(ii) Calculate the kg of organic HAP in the thinning and cleaning materials applied during the compliance period using Equation 1B of this section:

$$B = \sum_{j=1}^{n} \left(M_{t,j}\right)\left(W_{t,j}\right) \qquad \text{(Eq. 1B)}$$

Where:

B = Total mass of organic HAP in the thinning and cleaning materials applied during the compliance period, kg.

$M_{t,\ j}$ = Total mass of thinning or cleaning material, j, applied during the compliance period, kg.

$W_{t,\ j}$ = Mass fraction of organic HAP in thinning or cleaning material, j, kg organic HAP per kg thinning or cleaning material.

n = Number of different thinning and cleaning materials applied during the compliance period.

sfrattini on LAPJZKW1R2 with $$_JOB
VerDate Sep<11>2014 09:16 Apr 04, 2023 Jkt 256165 PO 00000 Frm 00878 Fmt 8010 Sfmt 8010 Q:\40\256165.XXX PC31
ER29MY03.001<MATH> ER29MY03.002<MATH> ER29MY03.003<MATH>

(iii) If you choose to account for the mass of organic HAP contained in waste materials sent or designated for shipment to a hazardous waste TSDF in Equation 1 of this section, then you must determine it according to paragraphs (a)(4)(iii)(A) through (D) of this section.

(A) You may include in the determination only waste materials that are generated by web coating/printing operations in the affected source for which you use Equation 1 of this section and that will be treated or disposed of by a facility that is regulated as a TSDF under 40 CFR part 262, 264, 265, or 266. The TSDF may be either off-site or on-site. You may not include organic HAP contained in wastewater.

(B) You must determine either the amount of the waste materials sent to a TSDF during the compliance period or the amount collected and stored during the compliance period designated for future transport to a TSDF. Do not include in your determination any waste materials sent to a TSDF during a compliance period if you have already included them in the amount collected and stored during that compliance period or a previous compliance period.

(C) Determine the total mass of organic HAP contained in the waste materials specified in paragraph (a)(4)(iii)(B) of this section.

(D) You must document the methodology you use to determine the amount of waste materials and the total mass of organic HAP they contain, as required in §63.4312(g). To the extent that waste manifests include this, they may be used as part of the documentation of the amount of waste materials and mass of organic HAP contained in them.

(5) *Calculate the total mass of coating and printing solids.* Determine the total mass of coating and printing solids applied, kg, which is the combined mass of the solids contained in all the coating and printing materials applied during the compliance period, using Equation 2 of this section:

$$H_t = \sum_{i=1}^{m} \left(M_{c,i}\right)\left(W_{f,i}\right) \qquad \text{(Eq. 2)}$$

Where:

H_t = Total mass of solids contained in coating and printing materials applied during the compliance period, kg.

$M_{c,\,i}$ = Mass of coating or printing material, i, applied during the compliance period, kg.

$W_{f,\,i}$ = mass fraction of solids in coating or printing material, i, applied during the compliance period, kg solids per kg of coating or printing material.

m = Number of coating and printing materials applied during the compliance period.

(6) Calculate the organic HAP emission rate for the compliance period, kg organic HAP emitted per kg solids used, using Equation 3 of this section:

$$H_{yr} = \frac{H_e}{H_t} \qquad \text{(Eq. 3)}$$

Where:

H_{yr} = Organic HAP emission rate for the compliance period, kg of organic HAP emitted per kg of solids in coating and printing materials applied.

H_e = Total mass organic HAP emissions from all coating, printing, thinning, and cleaning materials applied during the compliance period, kg, as calculated by Equation 1 of this section.

H_t = Total mass of coating and printing solids in materials applied during the compliance period, kg, as calculated by Equation 2 of this section.

(7) *Compliance demonstration.* The organic HAP emission rate for the initial compliance period must be less than or equal to the applicable emission limit in Table 1 to this subpart. You must keep all records as required by §§63.4312 and 63.4313. As part of the Notification of Compliance Status required by §63.4310, you must identify the web coating/printing operation(s) for which you used the emission rate without add-on controls option and submit a statement that the web coating/printing operation(s) was (were) in compliance with the emission limitations during the initial compliance period because the organic HAP emission rate was less than, or equal to, the applicable emission limit in Table 1 to this subpart.

(b) For dyeing and finishing operations, you may use the emission rate without add-on controls option for any individual dyeing/finishing operation, for any group of dyeing/finishing operations in the affected source, or for

sfrattini on LAPJZKW1R2 with $$_JOB
VerDate Sep<11>2014 09:16 Apr 04, 2023 Jkt 256165 PO 00000 Frm 00879 Fmt 8010 Sfmt 8010 Q:\40\256165.XXX PC31
ER29MY03.004<.MATH> ER29MY03.005<.MATH>

dyeing/finishing operations as a group in the affected source. You must use either the compliant material option or the emission rate with add-on controls option for any dyeing/finishing operation in the affected source for which you do not use this option. You may not use the emission rate without add-on controls option for any dyeing/finishing operation in a dyeing/finishing affected source for which you use the equivalent emission rate option. To demonstrate initial compliance using the emission rate without add-on controls option, the dyeing/finishing operation or group of operations must meet the applicable emission limit in Table 1 to this subpart but is not required to meet the operating limits or work practice standards in §§ 63.4292 and 63.4293, respectively. You must meet all the requirements of paragraphs (b)(1) through (6) of this section to demonstrate initial compliance with the applicable emission limit in Table 1 to this subpart for the dyeing/finishing operation(s). When calculating the organic HAP emission rate according to this section, do not include any dyeing and finishing materials applied on dyeing/finishing operations for which you use the compliant material option or the emission rate with add-on controls option. Use the procedures in this section on each regulated material in the condition it is in when it is received from its manufacturer or supplier and prior to any alteration. Water added in mixing at the affected source is not a regulated material and should not be included in the determination of the total mass of dyeing and finishing materials applied during the compliance period, using Equation 5 of this section.

(1) *Determine the mass fraction of organic HAP for each material.* Determine the mass fraction of organic HAP for each dyeing and finishing material applied during the compliance period according to the requirements in § 63.4321(e)(1)(iv).

(2) *Determine the mass of each material.* Determine the mass (kg) of each dyeing and finishing material applied during the compliance period by measurement or usage records.

(3) *Calculate the mass of organic HAP emissions.* The mass of organic HAP emissions is the combined mass of organic HAP contained in all dyeing and finishing materials applied during the compliance period minus the organic HAP in certain waste materials and wastewater streams. Calculate the mass of organic HAP emissions using Equation 4 of this section:

$$H_e = A - R_w - WW \qquad \text{(Eq. 4)}$$

Where:

H_e = Mass of organic HAP emissions during the compliance period, kg.

A = Total mass of organic HAP in the dyeing and finishing materials applied during the compliance period, kg, as calculated in Equation 4A of this section.

R_w = Total mass of organic HAP in waste materials sent or designated for shipment to a hazardous waste TSDF for treatment or disposal during the compliance period, kg, determined according to paragraph (b)(3)(ii) of this section. (You may assign a value of zero to R_w if you do not wish to use this allowance.)

WW = Total mass of organic HAP in wastewater discharged to a POTW or receiving onsite secondary treatment during the compliance period, kg, determined according to paragraph (b)(3)(iii) of this section. (You may assign a value of zero to WW if you do not wish to use this allowance.)

(i) Calculate the kg organic HAP in the dyeing and finishing materials applied during the compliance period using Equation 4A of this section:

$$A = \sum_{i=1}^{m} \left(M_{c,i}\right)\left(W_{c,i}\right) \qquad \text{(Eq. 4A)}$$

Where:

A = Total mass of organic HAP in the dyeing and finishing materials applied during the compliance period, kg.

$M_{c,\ i}$ = Mass of dyeing or finishing material, i, applied during the compliance period, kg.

$W_{c,\ i}$ = Mass fraction of organic HAP in dyeing or finishing material, i, kg organic HAP per kg of material.

m = Number of dyeing and finishing materials applied during the compliance period.

(ii) If you choose to account for the mass of organic HAP contained in waste materials sent or designated for shipment to a hazardous waste TSDF in Equation 4 of this section, then you

sfrattini on LAPJZKW1R2 with $$_JOB
VerDate Sep<11>2014 09:16 Apr 04, 2023 Jkt 256165 PO 00000 Frm 00880 Fmt 8010 Sfmt 8010 Q:\40\256165.XXX PC31
ER29MY03.006<MATH> ER29MY03.007<MATH>

must determine it according to paragraphs (b)(3)(ii)(A) through (D) of this section.

(A) You may include in the determination only waste materials that are generated by dyeing/finishing operations in the affected source for which you use Equation 4 of this section and that will be treated or disposed of by a facility that is regulated as a TSDF under 40 CFR part 262, 264, 265, or 266. The TSDF may be either off-site or on-site. You may not include organic HAP contained in wastewater.

(B) You must determine either the amount of the waste materials sent to a TSDF during the compliance period or the amount collected and stored during the compliance period designated for future transport to a TSDF. Do not include in your determination any waste materials sent to a TSDF during a compliance period if you have already included them in the amount collected and stored during that compliance period or a previous compliance period.

(C) Determine the total mass of organic HAP contained in the waste materials specified in paragraph (b)(3)(ii)(B) of this section.

(D) You must document the methodology you use to determine the amount of waste materials and the total mass of organic HAP they contain, as required in §63.4312(g). To the extent that waste manifests include this, they may be used as part of the documentation of the amount of waste materials and mass of organic HAP contained in them.

(iii) If you choose to account for the mass of organic HAP contained in wastewater discharged to a POTW or treated onsite prior to discharge in Equation 4 of this section, then you must determine it according to paragraph (c) of this section.

(4) *Calculate the total mass of dyeing and finishing materials.* Determine the total mass of dyeing and finishing materials applied, kg, which is the combined mass of all the dyeing and finishing materials applied during the compliance period, using Equation 5 of this section:

$$M_t = \sum_{i=1}^{m} \left(M_{c,i} \right) \qquad \text{(Eq. 5)}$$

Where:

M_t = Total mass of dyeing and finishing materials applied during the compliance period, kg.

$M_{c,\ i}$ = Mass of dyeing or finishing material, i, applied during the compliance period, kg.

m = Number of dyeing and finishing materials applied during the compliance period.

(5) Calculate the organic HAP emission rate, kg organic HAP emitted per kg dyeing and finishing material applied, using Equation 6 of this section:

$$H_{yr} = \frac{H_e}{M_t} \qquad \text{(Eq. 6)}$$

Where:

H_{yr} = The organic HAP emission rate for the compliance period, kg of organic HAP emitted per kg of dyeing and finishing materials.

H_e = Total mass of organic HAP emissions during the compliance period, kg, as calculated by Equation 4 of this section.

M_t = Total mass of dyeing and finishing materials applied during the compliance period, kg, as calculated by Equation 5 of this section.

(6) *Compliance demonstration.* The organic HAP emission rate for the initial compliance period must be less than or equal to the applicable emission limit in Table 1 to this subpart. You must keep all records as required by §§63.4312 and 63.4313. As part of the Notification of Compliance Status required by §63.4310, you must identify the dyeing/finishing operation(s) for which you used the emission rate without add-on controls option and submit a statement that the dyeing/finishing operation(s) was (were) in compliance with the emission limitations during the initial compliance period because the organic HAP emission rate was less than or equal to the applicable emission limit in Table 1 to this subpart.

(i) If your affected source performs only dyeing operations, paragraphs (b)(1) through (5) of this section apply to dyeing materials only, and you must demonstrate compliance with the emission limit in Table 1 to this subpart for dyeing operations.

sfrattini on LAPJZKW1R2 with $$_JOB
VerDate Sep<11>2014 09:16 Apr 04, 2023 Jkt 256165 PO 00000 Frm 00881 Fmt 8010 Sfmt 8010 Q:\40\256165.XXX PC31
ER29MY03.008<.MATH> ER29MY03.009<.MATH>

(ii) If your affected source performs only finishing operations, paragraphs (b)(1) through (5) of this section apply to finishing materials only, and you must demonstrate compliance with the emission limit in Table 1 to this subpart for finishing operations.

(iii) If your affected source performs both dyeing and finishing operations, paragraphs (b)(1) through (5) of this section apply to dyeing and finishing materials combined, and you must demonstrate compliance with the emission limit in Table 1 to this subpart for dyeing and finishing operations.

(c) If you choose to account for the mass of organic HAP contained in wastewater discharged to a POTW or treated onsite prior to discharge in Equation 4 of this section, then you must determine it according to paragraphs (c)(1) through (5) of this section. You may include in the determination only wastewater streams that are generated by dyeing/finishing operations in the affected source for which you use Equation 4 of this section. You must determine the mass of organic HAP from the average organic HAP concentration and mass flow rate of each wastewater stream generated by the affected dyeing/finishing operation (or group of dyeing/finishing operations discharging to a common wastewater stream) for which you use this allowance. You must consider the actual or anticipated production over the compliance period and include all wastewater streams generated by the affected dyeing/finishing operation(s) during this period. A performance test of the organic HAP loading to the wastewater shall be performed for each operating scenario, as defined in § 63.4371, during the compliance period.

(1) *Procedure to determine average organic HAP concentration.* You must determine the average organic HAP concentration, H_w, of each wastewater stream according to paragraphs (c)(1)(i) through (vi) of this section.

(i) *Sampling.* Wastewater samples may be grab samples or composite samples. Samples shall be taken at approximately equally spaced time intervals over a 1-hour period (or over the period that wastewater is being discharged from a batch process if it is shorter than a 1-hour period). Each 1-hour period constitutes a run, and a performance test shall consist of a minimum of 3 runs.

(ii) *Methods.* You may use any of the methods specified in paragraphs (c)(1)(ii)(A) through (E) of this section to determine the organic HAP content of the wastewater stream. The method shall be an analytical method for wastewater which has the organic HAP compound discharged to the wastewater as a target analyte.

(A) *Method 305.* Use procedures specified in Method 305 of 40 CFR part 63, appendix A.

(B) *Methods 624 and 625.* Use procedures specified in Method 624 and Method 625 of 40 CFR part 136, appendix A and comply with the sampling protocol requirements specified in paragraph (c)(1)(iii) of this section. If these methods are used to analyze one or more compounds that are not on the method's published list of approved compounds, the Alternative Test Procedure specified in 40 CFR 136.4 and 136.5 shall be followed. For Method 625, make corrections to the compounds for which the analysis is being conducted based on the accuracy as recovery factors in Table 7 of the method.

(C) *Methods 1624 and 1625.* Use procedures specified in Method 1624 and Method 1625 of 40 CFR part 136, appendix A and comply with the sampling protocol requirements specified in paragraph (c)(1)(iii) of this section. If these methods are used to analyze one or more compounds that are not on the method's published list of approved compounds, the Alternative Test Procedure specified in 40 CFR 136.4 and 136.5 shall be followed.

(D) *Other EPA method(s).* Use procedures specified in the method and comply with the requirements specified in paragraphs (c)(1)(iii) and either paragraph (c)(1)(iv)(A) or (B) of this section.

(E) *Methods other than EPA method.* Use procedures specified in the method and comply with the requirements specified in paragraphs (c)(1)(iii) and paragraph (c)(1)(iv)(A) of this section.

(iii) *Sampling plan.* If you have been expressly referred to this paragraph by provisions of this subpart, you shall prepare a sampling plan. Wastewater samples shall be collected using sampling procedures which minimize loss

sfrattini on LAPJZKW1R2 with $$_JOB
VerDate Sep<11>2014 09:16 Apr 04, 2023 Jkt 256165 PO 00000 Frm 00882 Fmt 8010 Sfmt 8010 Q:\40\256165.XXX PC31

of organic compounds during sample collection and analysis and maintain sample integrity. The sampling plan shall include procedures for determining recovery efficiency of the relevant organic HAP. An example of an example sampling plan would be one that incorporates similar sampling and sample handling requirements to those of Method 25D of 40 CFR part 60, appendix A. You shall maintain the sampling plan at the facility.

(iv) *Validation of methods.* You shall validate EPA methods other than Methods 305, 624, 625, 1624, 1625 using the procedures specified in paragraph (c)(1)(iv)(A) or (B) of this section.

(A) *Validation of EPA methods and other methods.* The method used to measure organic HAP concentrations in the wastewater shall be validated according to section 5.1 or 5.3, and the corresponding calculations in section 6.1 or 6.3, of Method 301 of appendix A of this part. The data are acceptable if they meet the criteria specified in section 6.1.5 or 6.3.3 of Method 301 of appendix A of this part. If correction is required under section 6.3.3 of Method 301 of appendix A of this part, the data are acceptable if the correction factor is within the range 0.7 to 1.30. Other sections of Method 301 of appendix A of this part are not required.

(B) *Validation for EPA methods.* Follow the procedures as specified in ''Alternative Validation Procedure for EPA Waste Methods'' 40 CFR part 63, appendix D.

(v) *Calculate the average concentration.* You shall calculate the average concentration for each individually speciated organic HAP compound by adding the individual values determined for the specific compound in each sample and dividing by the number of samples.

(vi) *Adjustment for concentrations determined downstream of the point of determination.* You shall make corrections to the specific compound average concentration or total organic HAP average concentration when the concentration is determined downstream of the point of determination at a location where either wastewater streams from outside of the affected dyeing/finishing operation or group of dyeing/finishing operations have been mixed with the affected wastewater stream or one or more affected wastewater streams have been treated. You shall make the adjustments either to the individual data points or to the final average organic HAP concentration.

(2) *Procedures to determine mass flow rate.* For each operating scenario, as defined in §63.4371, for which you have determined the organic HAP content of the wastewater stream, you shall determine the annual average mass flow rate, F_w, of the wastewater stream either at the point of determination or downstream of the point of determination with adjustment for flow rate changes made according to paragraph (c)(2)(ii) of this section. The annual average mass flow rate for the wastewater stream shall be representative of actual or anticipated operation of the dyeing/finishing operation(s) generating the wastewater over the compliance period. You must determine the annual average mass flow rate of each wastewater stream according to paragraphs (c)(2)(i) and (ii) of this section.

(i) *Procedures.* The procedures specified in paragraphs (c)(2)(i)(A) through (C) of this section are considered acceptable procedures for determining the mass flow rate. They may be used in combination, and no one procedure shall take precedence over another.

(A) *Knowledge of the wastewater.* You may use knowledge of the wastewater stream and/or the process to determine the annual average mass flow rate. You shall use the maximum expected annual average production capacity of the dyeing/finishing operation(s), knowledge of the process, and/or mass balance information to either estimate directly the average wastewater mass flow rate for the compliance period or estimate the total wastewater mass flow for the compliance period and then factor the total mass by the percentage of time in the compliance period the operating scenario is expected to represent. Where you use knowledge to determine the annual average mass flow rate, you shall provide sufficient information to document the mass flow rate.

(B) *Historical records.* You may use historical records to determine the average annual mass flow rate. Derive the highest annual average mass flow rate of wastewater from historical

sfrattini on LAPJZKW1R2 with $$_JOB
VerDate Sep<11>2014 09:16 Apr 04, 2023 Jkt 256165 PO 00000 Frm 00883 Fmt 8010 Sfmt 8010 Q:\40\256165.XXX PC31

records representing the most recent 5 years of operation, or if the dyeing/finishing operation(s) has(have) been in service for less than 5 years but at least 1 year, from historical records representing the total operating life of the process unit. Where historical records are used to determine the annual average mass flow rate, you shall provide sufficient information to document the mass flow rate.

(C) *Measurement of mass flow rate.* If you elect to measure mass flow rate, you shall comply with the requirements of this paragraph. Measurements shall be made at the point of determination, or at a location downstream of the point of determination with adjustments for mass flow rate changes made according to paragraph (c)(2)(ii) of this section. Where measurement data are used to determine the annual average mass flow rate, you shall provide sufficient information to document the mass flow rate.

(ii) *Adjustment for flow rates determined downstream of the point of determination.* You shall make corrections to the average annual mass flow rate of a wastewater stream when it is determined downstream of the point of determination at a location where either wastewater streams from outside of the affected dyeing/finishing operation or group of dyeing/finishing operations have been mixed with the affected wastewater stream or one or more wastewater streams have been treated. You shall make corrections for such changes in the annual average mass flow rate.

(3) *Wastewater treatment.* You shall document that the wastewater is either discharged to a POTW or onsite secondary wastewater treatment.

(4) *Determine the mass of organic HAP in the affected wastewater.* Determine the total mass of organic HAP, WW, contained in the wastewater streams characterized by the procedures in paragraphs (c)(1) and (2) of this section, using Equation 7 of this section:

$$WW = \sum_{k=1}^{o} \left(H_{w,k}\right)\left(F_{w,k}\right) \times 10^{-3} \qquad \text{(Eq. 7)}$$

Where:

WW = The total mass of organic HAP contained in the wastewater streams characterized by the procedures in paragraphs (c)(1) and (2) of this section, kg/yr

$H_{w,k}$ = Average organic HAP concentration of wastewater stream k, ppmw

$F_{w,k}$ = Annual average mass flow rate of wastewater stream k, Mg/yr

o = Number of wastewater streams characterized by the procedures in paragraphs (c)(1) and (2) of this section.

This is your allowance for organic HAP discharged to wastewater and not emitted to the atmosphere, WW in Equation 4.

(5) *Determine the fraction of organic HAP applied that is discharged to the wastewater.* For the purpose of taking credit for the wastewater allowance in continuous compliance demonstrations, determine the fraction of organic HAP applied in affected dyeing/finishing processes that is discharged to the wastewater, *i.e.,* divide WW by the mass of organic HAP in the dyeing and finishing materials applied during the compliance period, A, as calculated in Equation 4A of this section. The wastewater allowance for this fraction of organic HAP that is not emitted from the affected dyeing/finishing operation(s) may be taken for each compliance period that the operating scenario, as defined in § 63.4371, does not change from conditions during the performance test in a way that could increase the fraction of organic HAP emitted (*e.g.*, an increase in process temperature or decrease in process pressure or a change in the type or mass fraction of organic HAP entering the dyeing/finishing operation.) The allowance, WW, must be calculated by multiplying the fraction of organic HAP applied in affected processes that is discharged to the wastewater determined from the most recent performance test by the mass of organic HAP in the dyeing and finishing materials applied during the compliance period, A, as calculated in Equation 4A of this section.

(d) If you are determining the fraction of organic HAP applied in your dyeing/finishing affected source that is discharged to the wastewater, to demonstrate compliance with the equivalent emission rate option of § 63.4291(c)(4), then you must determine it according to paragraphs (d)(1) through (5) of this section. You must include in the determination only

sfrattini on LAPJZKW1R2 with $$_JOB
VerDate Sep<11>2014 09:16 Apr 04, 2023 Jkt 256165 PO 00000 Frm 00884 Fmt 8010 Sfmt 8010 Q:\40\256165.XXX PC31
ER29MY03.010<GPH>

wastewater streams generated by dyeing/finishing operations in your affected source. You shall determine the mass of organic HAP from the average organic HAP concentration and mass flow rate of each wastewater stream generated by each dyeing/finishing operation (or group of dyeing/finishing operations discharging to a common wastewater stream) in your affected source. You shall consider the actual or anticipated production over the compliance period and include all wastewater streams generated by the affected dyeing/finishing operation(s) during this period. A performance test of the organic HAP loading to the wastewater shall be conducted for each operating scenario, as defined in § 63.4371, during the compliance period.

(1) *Procedure to determine average organic HAP concentration*. You must determine the average organic HAP concentration of each wastewater stream according to paragraphs (c)(1)(i) through (vi) of this section.

(2) *Procedures to determine mass flow rate*. For each operating scenario, as defined in § 63.4371, for which you have determined the organic HAP content of the wastewater stream, you shall determine the annual average mass flow rate of the wastewater stream either at the point of determination, or downstream of the point of determination with adjustment for flow rate changes made according to paragraph (c)(2)(ii) of this section. The annual average mass flow rate for the wastewater stream shall be representative of actual or anticipated operation of the dyeing/finishing operation(s) generating the wastewater over the compliance period. You must determine the annual average mass flow rate of each wastewater stream according to paragraphs (c)(2)(i) and (ii) of this section.

(3) *Wastewater treatment*. You shall document that the wastewater is either discharged to a POTW or onsite secondary wastewater treatment.

(4) *Determine the mass of organic HAP in the affected wastewater*. Determine the total mass of organic HAP, WW, contained in the wastewater streams characterized by the procedures in paragraphs (d)(1) and (2) of this section, using Equation 7 of this section.

(5) *Determine the fraction of organic HAP applied that is discharged to the wastewater*. Determine the fraction of organic HAP applied in your dyeing/finishing affected source that is discharged to the wastewater, *i.e.*, divide WW by the mass of organic HAP in the dyeing and finishing materials applied during the compliance period, A, as calculated in Equation 4A of this section. One of the conditions that must be met to demonstrate compliance with the equivalent emission rate option is that the fraction of organic HAP applied in your dyeing/finishing affected source that is discharged to the wastewater must be at least 90 percent.

§ 63.4332 How do I demonstrate continuous compliance with the emission limitations?

(a) To demonstrate continuous compliance, the organic HAP emission rate for each compliance period, determined according to § 63.4331(a) for web coating/printing operations and according to § 63.4331(b) for dyeing/finishing operations, must be less than or equal to the applicable emission limit in Table 1 to this subpart. Each month following the initial compliance period described in § 63.4330 is a compliance period consisting of that month and the preceding 11 months. You must perform the calculations in § 63.4331 on a monthly basis.

(b) If the organic HAP emission rate for any compliance period exceeded the applicable emission limit in Table 1 to this subpart, this is a deviation from the emission limitations for that compliance period and must be reported as specified in §§ 63.4310(c)(6) and 63.4311(a)(6).

(c) As part of each semiannual compliance report required by § 63.4311, you must identify any web coating/printing operation or dyeing/finishing operation for which you used the emission rate without add-on controls option. If there were no deviations from the applicable emission limit in Table 1 to this subpart, you must submit a statement that, as appropriate, the web coating/printing operations or the dyeing/finishing operations were in compliance with the emission limitations during the reporting period because the

sfrattini on LAPJZKW1R2 with $$_JOB
VerDate Sep<11>2014 09:16 Apr 04, 2023 Jkt 256165 PO 00000 Frm 00885 Fmt 8010 Sfmt 8010 Q:\40\256165.XXX PC31

organic HAP emission rate for each compliance period was less than or equal to the applicable emission limit in Table 1 to this subpart.

(d) You must maintain records as specified in §§ 63.4312 and 63.4313.

COMPLIANCE REQUIREMENTS FOR THE EMISSION RATE WITH ADD-ON CONTROLS OPTION

§ 63.4340 By what date must I conduct initial performance tests and other initial compliance demonstrations?

(a) *New and reconstructed affected sources.* For a new or reconstructed affected source, you must meet the requirements of paragraphs (a)(1) through (4) of this section.

(1) All emission capture systems, add-on control devices, and CPMS must be installed and operating no later than the applicable compliance date specified in § 63.4283. Except for solvent recovery systems for which you conduct liquid-liquid material balances according to § 63.4341(e)(5) or (f)(5), you must conduct a performance test of each capture system and add-on control device according to the procedures in §§ 63.4360, 63.4361, and 63.4362, and establish the operating limits required by § 63.4292, within 180 days of the applicable compliance date specified in § 63.4283. For a solvent recovery system for which you conduct liquid-liquid material balances according to § 63.4341(e)(5) or (f)(5), you must initiate the first material balance no later than the applicable compliance date specified in § 63.4283.

(2) You must develop and begin implementing the work practice plan required by § 63.4293 no later than the compliance date specified in § 63.4283.

(3) You must complete the compliance demonstration for the initial compliance period according to the requirements of § 63.4341. The initial compliance period begins on the applicable compliance date specified in § 63.4283 and ends on the last day of the 12th full month after the compliance date, or the date you conduct the performance tests of the emission capture systems and add-on control devices, or initiate the first liquid-liquid material balance for a solvent recovery system, whichever is later. The initial compliance demonstration includes the results of emission capture system and add-on control device performance tests conducted according to §§ 63.4360, 63.4361, and 63.4362; results of liquid-liquid material balances conducted according to § 63.4341(e)(5) or (f)(5); calculations according to § 63.4341 and supporting documentation showing that during the initial compliance period the organic HAP emission rate was equal to or less than the applicable emission limit in Table 1 to this subpart; the operating limits established during the performance tests and the results of the continuous parameter monitoring required by § 63.4364; and documentation of whether you developed and implemented the work practice plan required by § 63.4293.

(4) You do not need to comply with the operating limits for the emission capture system and add-on control device required by § 63.4292 until after you have completed the performance tests specified in paragraph (a)(1) of this section. Instead, you must maintain a log detailing the operation and maintenance of the emission capture system, add-on control device, and continuous parameter monitors during the period between the compliance date and the performance test. You must begin complying with the operating limits for your affected source on the date you complete the performance tests specified in paragraph (a)(1) of this section. This requirement does not apply to solvent recovery systems for which you conduct liquid-liquid material balances according to the requirements of § 63.4341(e)(5) or (f)(5).

(b) *Existing sources.* For an existing affected source, you must meet the requirements of paragraphs (b)(1) through (3) of this section.

(1) All emission capture systems, add-on control devices, and CPMS must be installed and operating no later than the applicable compliance date specified in § 63.4283. Except for solvent recovery systems for which you conduct liquid-liquid material balances according to § 63.4341(e)(5) or (f)(5), you must conduct a performance test of each capture system and add-on control device according to the procedures in §§ 63.4360, 63.4361, and 63.4362, and establish the operating limits required

sfrattini on LAPJZKW1R2 with $$_JOB
VerDate Sep<11>2014 09:16 Apr 04, 2023 Jkt 256165 PO 00000 Frm 00886 Fmt 8010 Sfmt 8010 Q:\40\256165.XXX PC31

by §63.4292, within 180 days of the compliance date specified in §63.4283. For a solvent recovery system for which you conduct liquid-liquid material balances according to §63.4341(e)(5) or (f)(5), you must initiate the first material balance no later than the compliance date specified in §63.4283.

(2) You must develop and begin implementing the work practice plan required by §63.4293 no later than the compliance date specified in §63.4283.

(3) You must complete the compliance demonstration for the initial compliance period according to the requirements of §63.4341. The initial compliance period begins on the applicable compliance date specified in §63.4283 and ends on the last day of the 12th full month after the compliance date. The initial compliance demonstration includes the results of emission capture system and add-on control device performance tests conducted according to §§63.4360, 63.4361, and 63.4362; results of liquid-liquid material balances conducted according to §63.4341(e)(5) or (f)(5); calculations according to §63.4341 and supporting documentation showing that during the initial compliance period the organic HAP emission rate was equal to or less than the applicable emission limit in Table 1 to this subpart; the operating limits established during the performance tests and the results of the continuous parameter monitoring required by §63.4364; and documentation of whether you developed and implemented the work practice plan required by §63.4293.

[68 FR 32189, May 29, 2003, as amended at 84 FR 9627, Mar. 15, 2019]

§63.4341 How do I demonstrate initial compliance?

(a) You may use the emission rate with add-on controls option for any individual web coating/printing operation, for any group of web coating/printing operations in the affected source, or for all of the web coating/printing operations in the affected source. You may include both controlled and uncontrolled web coating/printing operations in a group for which you use this option. You must use either the compliant material option, the emission rate without add-on controls option, the organic HAP overall control efficiency option, or the oxidizer outlet organic HAP concentration option for any web coating/printing operation in the affected source for which you do not use the emission rate with add-on controls option. To demonstrate initial compliance, any web coating/printing operation for which you use the emission rate with add-on controls option must meet the applicable emission limitations in Table 1 to this subpart, and in §§63.4292 and 63.4293. You must meet all the requirements of paragraphs (a), (c), (d), and (e) of this section. When calculating the organic HAP emission rate according to this section, do not include any coating, printing, thinning, or cleaning materials applied on web coating/printing operations for which you use the compliant material option, the emission rate without add-on controls option, the organic HAP overall control efficiency option, or the oxidizer outlet organic HAP concentration option. You do not need to redetermine the mass of organic HAP in coating, printing, thinning, or cleaning materials that have been reclaimed onsite and reused in the web coating/printing operation(s) for which you use the emission rate with add-on control option.

(b) You may use the emission rate with add-on controls option for any individual dyeing/finishing operation, for any group of dyeing/finishing operations in the affected source, or for all of the dyeing/finishing operations in the affected source. You may include both controlled and uncontrolled dyeing/finishing operations in a group for which you use this option. You must use either the compliant material option or the emission rate without add-on controls option for any dyeing/finishing operation in the affected source for which you do not use the emission rate with add-on controls option. You may not use the emission rate with add-on controls option for any dyeing/finishing operation in a dyeing/finishing affected source for which you use the equivalent emission rate option. To demonstrate initial compliance, any dyeing/finishing operation for which you use the emission rate with add-on controls option must meet the applicable emission limitations in Table 1 to this subpart, and in §§63.4292

sfrattini on LAPJZKW1R2 with $$_JOB
VerDate Sep<11>2014 09:16 Apr 04, 2023 Jkt 256165 PO 00000 Frm 00887 Fmt 8010 Sfmt 8010 Q:\40\256165.XXX PC31

and 63.4293. You must meet all the requirements of paragraphs (b), (c), (d), and (f) this section. When calculating the organic HAP emission rate according to this section, do not include any dyeing or finishing materials applied on dyeing/finishing operations for which you use the compliant material option or the emission rate without add-on controls option. You do not need to redetermine the mass of organic HAP in dyeing or finishing materials that have been reclaimed onsite and reused in the dyeing/finishing operation(s) for which you use the emission rate with add-on controls option.

(c) *Compliance with operating limits.* Except as provided in § 63.4340(a)(4), and except for solvent recovery systems for which you conduct liquid-liquid material balances according to § 63.4341(e)(5) or (f)(5), you must establish and demonstrate continuous compliance during the initial compliance period with the operating limits required by § 63.4292, using the procedures specified in §§ 63.4363 and 63.4364.

(d) *Compliance with work practice requirements.* You must develop, implement, and document your implementation of the work practice plan required by § 63.4293 during the initial compliance period as specified in § 63.4312.

(e) *Compliance with web coating/printing emission limits.* You must follow the procedures in paragraphs (e)(1) through (8) of this section to demonstrate compliance with the applicable web coating/printing emission limit in Table 1 to this subpart.

(1) *Determine the mass fraction of organic HAP, the mass fraction of solids, and mass of materials.* Follow the procedures specified in § 63.4331(a)(1), (2), and (3) to determine the mass fraction of organic HAP for each coating, printing, thinning, and cleaning material applied during the compliance period; the mass fraction of solids for each coating and printing material applied during the compliance period; and mass of each coating, printing, thinning, and cleaning material applied during the compliance period.

(2) *Calculate the mass of organic HAP emissions before add-on controls.* Using Equation 1 of § 63.4331, calculate the mass of organic HAP emissions before add-on controls from all coating, printing, thinning, and cleaning materials applied during the compliance period minus the organic HAP in certain waste materials in the web coating/printing operation or group of web coating/printing operations for which you use the emission rate with add-on controls.

(3) *Calculate the organic HAP emissions reductions for each controlled web coating/printing operation.* Determine the mass of organic HAP emissions reduced for each controlled web coating/printing operation during the compliance period. The emissions reductions determination quantifies the total organic HAP emissions that pass through the emission capture system and are destroyed or removed by the add-on control device. Use the procedures in paragraph (e)(4) of this section to calculate the mass of organic HAP emissions reductions for each controlled web coating/printing operation using an emission capture system and add-on control device other than a solvent recovery system for which you conduct liquid-liquid material balances. For each controlled web coating/printing operation using a solvent recovery system for which you conduct a liquid-liquid material balance, use the procedures in paragraph (e)(5) of this section to calculate the organic HAP emissions reductions.

(4) *Calculate the organic HAP emission reduction for each controlled web coating/printing operation not using liquid-liquid material balance.* For each controlled web coating/printing operation using an emission capture system and add-on control device other than a solvent recovery system for which you conduct liquid-liquid material balances, calculate the organic HAP emissions reductions using Equation 1 of this section. The equation applies the emission capture system efficiency and add-on control device efficiency to the mass of organic HAP contained in the coating, printing, thinning, and cleaning materials applied in the web coating/printing operation served by the emission capture system and add-on control device during the compliance period. For any period of time a deviation specified in § 63.4342(c) or (d) occurs in the controlled web coating/printing operation, then you must assume zero efficiency

sfrattini on LAPJZKW1R2 with $$_JOB
VerDate Sep<11>2014 09:16 Apr 04, 2023 Jkt 256165 PO 00000 Frm 00888 Fmt 8010 Sfmt 8010 Q:\40\256165.XXX PC31

for the emission capture system and add-on control device. Equation 1 of this section treats the coating, printing, thinning, and cleaning materials applied during such a deviation as if they were used on an uncontrolled web coating/printing operation for the time period of the deviation.

$$H_C = \left(A_I + B_I - H_{UNC}\right)\left(\frac{CE}{100} \times \frac{DRE}{100}\right) \qquad \text{(Eq. 1)}$$

Where:

H_C = Mass of organic HAP emission reduction for the controlled web coating/printing operation during the compliance period, kg.

A_I = Total mass of organic HAP in the coating and printing materials applied in the controlled web coating/printing operation during the compliance period, kg, as calculated in Equation 1A of this section.

B_I = Total mass of organic HAP in the thinning and cleaning materials applied in the controlled web coating/printing operation during the compliance period, kg, as calculated in Equation 1B of this section.

H_{UNC} = Total mass of organic HAP in the coating, printing, thinning, and cleaning materials applied during all deviations specified in §63.4342(c) and (d) that occurred during the compliance period in the controlled web coating/printing operation, kg, as calculated in Equation 1C of this section.

CE = Capture efficiency of the emission capture system vented to the add-on control device, percent. Use the test methods and procedures specified in §§63.4360 and 63.4361 to measure and record capture efficiency.

DRE = Organic HAP destruction or removal efficiency of the add-on control device, percent. Use the test methods and procedures in §§63.4360 and 63.4362 to measure and record the organic HAP destruction or removal efficiency.

(i) Calculate the total mass of organic HAP in the coating and printing materials applied in the controlled web coating/printing operation(s) during the compliance period, kg, using Equation 1A of this section:

$$A_I = \sum_{i=1}^{m}\left(M_{c,i}\right)\left(W_{c,i}\right) \qquad \text{(Eq. 1A)}$$

Where:

A_I = Total mass of organic HAP in the coating and printing materials applied in the controlled web coating/printing operation(s) during the compliance period, kg.

$M_{c,i}$ = Mass of coating or printing material, i, applied during the compliance period, kg.

$W_{c,i}$ = Mass fraction of organic HAP in coating or printing material, i, kg per kg.

m = Number of different coating and printing materials applied during compliance period.

(ii) Calculate the total mass of organic HAP in the thinning and cleaning materials applied in the controlled web coating/printing operation(s) during the compliance period, kg, using Equation 1B of this section:

$$B_I = \sum_{j=1}^{n}\left(M_{t,j}\right)\left(W_{t,j}\right) \qquad \text{(Eq. 1B)}$$

Where:

B_I = Total mass of organic HAP in the thinning and cleaning materials applied in the controlled web coating/printing operation(s) during the compliance period, kg.

$M_{t,j}$ = Total mass of thinning or cleaning material, j, applied during the compliance period, kg.

$W_{t,j}$ = Mass fraction of organic HAP in thinning or cleaning material, j, kg per kg.

n = Number of different thinning and cleaning materials applied during the compliance period.

(iii) Calculate the mass of organic HAP in the coating, printing, thinning, and cleaning materials applied in the controlled web coating/printing operation during deviations specified in §63.4342(c) and (d), using Equation 1C of this section.

$$H_{UNC} = \sum_{h=1}^{q}\left(M_h\right)\left(W_h\right) \qquad \text{(Eq. 1C)}$$

Where:

H_{UNC} = Total mass of organic HAP in the coating, printing, thinning, and cleaning materials applied during all deviations

sfrattini on LAPJZKW1R2 with $$_JOB
VerDate Sep<11>2014 09:16 Apr 04, 2023 Jkt 256165 PO 00000 Frm 00889 Fmt 8010 Sfmt 8010 Q:\40\256165.XXX PC31
ER29MY03.011</MATH> ER29MY03.012</MATH> ER29MY03.013</MATH> ER29MY03.014</MATH>

specified in § 63.4342 (c) and (d) that occurred during the compliance period in the controlled web coating/printing operation, kg.

M_h = Total mass of coating, printing, thinning, or cleaning material, h, applied in the controlled web coating/printing operation during deviations, kg.

W_h = Mass fraction of organic HAP in coating, printing, thinning, or cleaning material, h, kg organic HAP per kg material.

q = Number of different coating, printing, thinning, and cleaning materials applied and used.

(5) *Calculate the organic HAP emissions reductions for controlled web coating/printing operation using liquid-liquid material balances.* For each controlled web coating/printing operation using a solvent recovery system for which you conduct liquid-liquid material balances, calculate the organic HAP emissions reductions by applying the volatile organic matter collection and recovery efficiency to the mass of organic HAP contained in the coating, printing, thinning, and cleaning materials applied in the web coating/printing operation controlled by the solvent recovery system during the compliance period. Perform a liquid-liquid material balance for the compliance period as specified in paragraphs (e)(5)(i) through (v) of this section. Calculate the mass of organic HAP emissions reductions by the solvent recovery system as specified in paragraph (e)(5)(vi) of this section.

(i) For each solvent recovery system, install, calibrate, maintain, and operate according to the manufacturer's specifications, a device that indicates the cumulative amount of volatile organic matter recovered by the solvent recovery system for the compliance period. The device must be initially certified by the manufacturer to be accurate to within ±2.0 percent of the mass of volatile organic matter recovered.

(ii) For each solvent recovery system, determine the mass of volatile organic matter recovered for the compliance period, kg, based on measurement with the device required in paragraph (e)(5)(i) of this section.

(iii) Determine the mass fraction of volatile organic matter for each coating, printing, cleaning, and thinning material applied in the web coating/printing operation controlled by the solvent recovery system during the compliance period, kg volatile organic matter per kg coating, printing, cleaning, and thinning material. You may determine the volatile organic matter mass fraction using Method 24 in appendix A–7 of part 60, ASTM D2369–10 (R2015), ''Test Method for Volatile Content of Coatings'' (incorporated by reference, *see* § 63.14), or an EPA approved alternative method. Alternatively, you may use information provided by the manufacturer or supplier of the coating or printing material. In the event of any inconsistency between information provided by the manufacturer or supplier and the results of Method 24, ASTM D2369–10 (R2015), or an approved alternative method, the test method results will govern.

(iv) Measure the mass of each coating, printing, thinning, and cleaning material applied in the web coating/printing operation controlled by the solvent recovery system during the compliance period, kg.

(v) For the compliance period, calculate the solvent recovery system's volatile organic matter collection and recovery efficiency using Equation 2 of this section:

$$R_V = 100 \frac{M_{VR}}{\sum_{i=1}^{m} M_i WV_{c,i} + \sum_{j=1}^{n} M_j WV_{t,j}} \qquad \text{(Eq. 2)}$$

Where:

R_V = Volatile organic matter collection and recovery efficiency of the solvent recovery system during the compliance period, percent.

M_{VR} = Mass of volatile organic matter recovered by the solvent recovery system during the compliance period, kg.

sfrattini on LAPJZKW1R2 with $$_JOB
VerDate Sep<11>2014 09:16 Apr 04, 2023 Jkt 256165 PO 00000 Frm 00890 Fmt 8010 Sfmt 8010 Q:\40\256165.XXX PC31
ER29MY03.015<MATH>

M_i = Mass of coating or printing material, i, applied in the web coating/printing operation controlled by the solvent recovery system during the compliance period, kg.

$WV_{c,i}$ = Mass fraction of volatile organic matter for coating or printing material, i, kg volatile organic matter per kg coating or printing material.

M_j = Mass of thinning or cleaning material, j, applied in the web coating/printing operation controlled by the solvent recovery system during the compliance period, kg.

$WV_{t,j}$ = Mass fraction of volatile organic matter for thinning or cleaning material, j, kg volatile organic matter per kg thinning or cleaning material.

m = Number of different coating and printing materials applied in the web coating/printing operation controlled by the solvent recovery system during the compliance period.

n = Number of different thinning and cleaning materials applied in the web coating/printing operation controlled by the solvent recovery system during the compliance period.

(vi) Calculate the mass of organic HAP emission reductions for the web coating/printing operation controlled by the solvent recovery system during the compliance period using Equation 3 of this section and according to paragraphs (e)(5)(vi)(A) and (B) of this section:

$$H_{CSR} = \left(A_{CSR} + B_{CSR}\right)\left(\frac{R_V}{100}\right) \qquad \text{(Eq. 3)}$$

Where:

H_{CSR} = Mass of organic HAP emission reduction for the web coating/printing operation controlled by the solvent recovery system during the compliance period, kg.

A_{CSR} = Total mass of organic HAP in the coating and printing material applied in the web coating/printing operation controlled by the solvent recovery system during the compliance period, kg, calculated using Equation 3A of this section.

B_{CSR} = Total mass of organic HAP in the thinning and cleaning materials applied in the web coating/printing operation controlled by the solvent recovery system during the compliance period, kg, calculated using Equation 3B of this section.

R_V = Volatile organic matter collection and recovery efficiency of the solvent recovery system, percent, from Equation 2 of this section.

(A) Calculate the total mass of organic HAP in the coating and printing materials applied in the web coating/printing operation(s) controlled by the solvent recovery system during the compliance period, kg, using Equation 3A of this section:

$$A_{CSR} = \sum_{i=1}^{m}\left(M_{c,i}\right)\left(W_{c,i}\right) \qquad \text{(Eq. 3A)}$$

Where:

A_{CSR} = Total mass of organic HAP in the coating and printing materials applied in the web coating/printing operations(s) controlled by the solvent recovery system during the compliance period, kg.

$M_{c,i}$ = Mass of coating or printing material, i, applied during the compliance period in the web coating/printing operation(s) controlled by the solvent recovery system, kg.

$W_{c,i}$ = Mass fraction of organic HAP in coating or printing material, i, kg per kg.

m = Number of different coating and printing materials applied during compliance period.

(B) Calculate the total mass of organic HAP in the thinning and cleaning materials applied in the web coating/printing operation(s) controlled by the solvent recovery system during the compliance period, kg, using Equation 3B of this section:

$$B_{CSR} = \sum_{j=1}^{n}\left(M_{t,j}\right)\left(W_{t,j}\right) \qquad \text{(Eq. 3B)}$$

Where:

B_{CSR} = Total mass of organic HAP in the thinning and cleaning materials applied in the web coating/printing operation(s) controlled by the solvent recovery system during the compliance period, kg.

$M_{t,j}$ = Total mass of thinning or cleaning material, j, applied during the compliance period in the web coating/printing operation(s) controlled by the solvent recovery system, kg.

$W_{t,j}$ = Mass fraction of organic HAP in thinning or cleaning material, j, kg per kg.

n = Number of different thinning and cleaning materials applied during the compliance period.

(6) *Calculate the total mass of coating and printing solids.* Determine the total mass of coating and printing solids applied, kg, which is the combined mass of the solids contained in all the coating and printing material applied during the compliance period in the web coating/printing operation(s) for which

sfrattini on LAPJZKW1R2 with $$_JOB
VerDate Sep<11>2014 09:16 Apr 04, 2023 Jkt 256165 PO 00000 Frm 00891 Fmt 8010 Sfmt 8010 Q:\40\256165.XXX PC31
ER29MY03.016</MATH> ER29MY03.017</MATH> ER29MY03.018</MATH>

you use the emission rate with add-on controls option, using Equation 2 of § 63.4331.

(7) *Calculate the organic HAP emission rate with add-on controls for the compliance period.* Determine the organic HAP emission rate with add-on controls for the compliance period, kg organic HAP emitted per kg solids applied during the compliance period, using Equation 4 of this section.

$$H_{HAP} = \frac{H_e - \sum_{i=1}^{q}\left(H_{C,i}\right) - \sum_{j=i}^{r}\left(H_{CSR,j}\right)}{H_t} \qquad \text{(Eq. 4)}$$

Where:

H_{HAP} = Organic HAP emission rate with add-on controls for the compliance period, kg organic HAP emitted per kg solids applied.

H_e = Total mass of organic HAP emissions before add-on controls from all the coating, printing, thinning, and cleaning materials applied during the compliance period, kg, determined according to paragraph (e)(2) of this section.

$H_{C,i}$ = Total mass of organic HAP emissions reduction for controlled web coating/printing operation, i, not using a liquid-liquid material balance, during the compliance period, kg, from Equation 1 of this section.

$H_{CSR,j}$ = Total mass of organic HAP emissions reduction for web coating/printing operation, j, controlled by a solvent recovery system using a liquid-liquid material balance, during the compliance period, kg, from Equation 3 of this section.

H_t = Total mass of coating and printing solids applied during the compliance period, kg, from Equation 2 of § 63.4331.

q = Number of controlled web coating/printing operations not using a liquid-liquid material balance.

r = Number of web coating/printing operations controlled by a solvent recovery system using a liquid-liquid material balance.

(8) *Compliance demonstration.* To demonstrate initial compliance with the emission limit, the organic HAP emission rate with add-on controls for the compliance period, calculated using Equation 4 of this section, must be less than or equal to the applicable emission limit in Table 1 to this subpart. You must keep all records as required by §§ 63.4312 and 63.4313. As part of the Notification of Compliance Status required by § 63.4310, you must identify the web coating/printing operation(s) for which you used the emission rate with add-on controls option and submit a statement that the web coating/printing operation(s) was (were) in compliance with the emission limitations during the initial compliance period because the organic HAP emission rate was less than or equal to the applicable emission limit in Table 1 to this subpart, and that you achieved the operating limits required by § 63.4292 and the work practice standards required by § 63.4293.

(f) *Compliance with dyeing/finishing emission limits.* You must follow the procedures in paragraphs (f)(1) through (8) of this section to demonstrate compliance with the applicable dyeing/finishing emission limit in Table 1 to this subpart.

(1) *Determine the mass fraction of organic HAP and mass of materials.* Follow the procedures specified in § 63.4331(b)(1) and (2) to determine the mass fraction of organic HAP for each dyeing and finishing material applied and mass of each dyeing and finishing material applied during the compliance period.

(2) *Calculate the mass of organic HAP emissions before add-on controls.* Using Equation 4 of § 63.4331, calculate the mass of organic HAP emissions before add-on controls from all dyeing and finishing materials applied during the compliance period minus the organic HAP in certain waste materials and wastewaters in the dyeing/finishing operation or group of dyeing/finishing operations for which you use the emission rate with add-on controls option.

sfrattini on LAPJZKW1R2 with $$_JOB
VerDate Sep<11>2014 09:16 Apr 04, 2023 Jkt 256165 PO 00000 Frm 00892 Fmt 8010 Sfmt 8010 Q:\40\256165.XXX PC31
ER29MY03.019<MATH>

(3) *Calculate the organic HAP emissions reductions for each controlled dyeing/finishing operation.* Determine the mass of organic HAP emissions reduced for each controlled dyeing/finishing operation during the compliance period. The emissions reductions determination quantifies the total organic HAP emissions that pass through the emission capture system and are destroyed or removed by the add-on control device. Use the procedures in paragraph (f)(4) of this section to calculate the mass of organic HAP emissions reductions for each controlled dyeing/finishing operation using an emission capture system and add-on control device other than a solvent recovery system for which you conduct liquid-liquid material balances. For each controlled dyeing/finishing operation using a solvent recovery system for which you conduct a liquid-liquid material balance, use the procedures in paragraph (f)(5) of this section to calculate the organic HAP emissions reductions.

(4) *Calculate the organic HAP emission reduction for each controlled dyeing/finishing operation not using liquid-liquid material balance.* For each controlled dyeing/finishing operation using an emission capture system and add-on control device other than a solvent recovery system for which you conduct liquid-liquid material balances, calculate the organic HAP emissions reductions using Equation 5 of this section. The equation applies the emission capture system efficiency and add-on control device efficiency to the mass of organic HAP contained in the dyeing and finishing materials applied in the dyeing/finishing operation served by the emission capture system and add-on control device during the compliance period. For any period of time a deviation specified in §63.4342(c) or (d) occurs in the controlled dyeing/finishing operation, then you must assume zero efficiency for the emission capture system and add-on control device. Equation 5 of this section treats the dyeing and finishing materials applied during such a deviation as if they were applied on an uncontrolled dyeing/finishing operation for the time period of the deviation.

$$H_C = \left(A_I - H_{UNC}\right)\left(\frac{CE}{100} \times \frac{DRE}{100}\right) \quad \text{(Eq. 5)}$$

Where:

H_C = Mass of organic HAP emission reduction for the controlled dyeing/finishing operation during the compliance period, kg.

A_I = Total mass of organic HAP in the dyeing and finishing materials applied in the controlled dyeing/finishing operation during the compliance period, kg, as calculated in Equation 5A of this section.

H_{UNC} = Total mass of organic HAP in the dyeing and finishing materials applied during all deviations specified in §63.4342(c) and (d) that occurred during the compliance period in the controlled dyeing/finishing operation, kg, as calculated in Equation 5B of this section.

CE = Capture efficiency of the emission capture system vented to the add-on control device, percent. Use the test methods and procedures specified in §§63.4360 and 63.4361 to measure and record capture efficiency.

DRE = Organic HAP destruction or removal efficiency of the add-on control device, percent. Use the test methods and procedures in §§63.4360 and 63.4362 to measure and record the organic HAP destruction or removal efficiency.

(i) Calculate the total mass of organic HAP in the dyeing and finishing materials applied in the controlled dyeing/finishing operation(s) during the compliance period, kg, using Equation 5A of this section:

$$A_I = \sum_{i=1}^{m}\left(M_{c,i}\right)\left(W_{c,i}\right) \quad \text{(Eq. 5A)}$$

Where:

A_I = Total mass of organic HAP in the dyeing and finishing materials applied in the controlled dyeing/finishing operations(s) during the compliance period, kg.

$M_{c,i}$ = Mass of dyeing or finishing material, i, applied during the compliance period, kg.

$W_{c,i}$ = Mass fraction of organic HAP in dyeing or finishing material, i, kg per kg.

m = Number of different dyeing and finishing materials applied during compliance period.

(ii) Calculate the mass of organic HAP in the dyeing and finishing materials applied in the controlled dyeing/finishing operation during deviations specified in §63.4342(c) and (d), using Equation 5B of this section.

sfrattini on LAPJZKW1R2 with $$_JOB
VerDate Sep<11>2014 09:16 Apr 04, 2023 Jkt 256165 PO 00000 Frm 00893 Fmt 8010 Sfmt 8010 Q:\40\256165.XXX PC31
ER29MY03.020<.MATH> ER29MY03.021</MATH>

$$H_{UNC} = \sum_{h=1}^{q} (M_h)(W_h) \qquad \text{(Eq. 5B)}$$

Where:

H_{UNC} = Total mass of organic HAP in the dyeing and finishing materials applied during all deviations specified in §63.4342(c) and (d) that occurred during the compliance period in the controlled dyeing/finishing operation, kg.

M_h = Total mass of dyeing and finishing material, h, applied in the controlled dyeing/finishing operation during deviations, kg.

W_h = Mass fraction of organic HAP in dyeing or finishing material, h, kg organic HAP per kg material.

q = Number of different dyeing and finishing materials applied.

(5) *Calculate the organic HAP emissions reductions for controlled dyeing/finishing operation using liquid-liquid material balances.* For each controlled dyeing/finishing operation using a solvent recovery system for which you conduct liquid-liquid material balances, calculate the organic HAP emissions reductions by applying the volatile organic matter collection and recovery efficiency to the mass of organic HAP contained in the dyeing and finishing materials applied in the dyeing/finishing operation controlled by the solvent recovery system during the compliance period. Perform a liquid-liquid material balance for the compliance period as specified in paragraphs (f)(5)(i) through (v) of this section. Calculate the mass of organic HAP emissions reductions by the solvent recovery system as specified in paragraph (f)(5)(vi) of this section.

(i) For each solvent recovery system, install, calibrate, maintain, and operate according to the manufacturer's specifications, a device that indicates the cumulative amount of volatile organic matter recovered by the solvent recovery system for the compliance period. The device must be initially certified by the manufacturer to be accurate to within ±2.0 percent of the mass of volatile organic matter recovered.

(ii) For each solvent recovery system, determine the mass of volatile organic matter recovered for the compliance period, kg, based on measurement with the device required in paragraph (f)(5)(i) of this section.

(iii) Determine the mass fraction of volatile organic matter for each dyeing and finishing material applied in the dyeing/finishing operation controlled by the solvent recovery system during the compliance period, kg volatile organic matter per kg dyeing and finishing material. You may determine the volatile organic matter mass fraction using information provided by the manufacturer or supplier of the dyeing or finishing material.

(iv) Measure the mass of each dyeing and finishing material applied in the dyeing/finishing operation controlled by the solvent recovery system during the compliance period, kg.

(v) For the compliance period, calculate the solvent recovery system's volatile organic matter collection and recovery efficiency using Equation 6 of this section:

$$R_V = 100 \frac{M_{VR}}{\sum_{i=1}^{m} M_i WV_{c,i}} \qquad \text{(Eq. 6)}$$

Where:

R_V = Volatile organic matter collection and recovery efficiency of the solvent recovery system during the compliance period, percent.

M_{VR} = Mass of volatile organic matter recovered by the solvent recovery system during the compliance period, kg.

M_i = Mass of dyeing or finishing material, i, applied in the dyeing/finishing operation controlled by the solvent recovery system during the compliance period, kg.

$WV_{c,i}$ = Mass fraction of volatile organic matter for dyeing or finishing material, i, kg volatile organic matter per kg dyeing or finishing material.

m = Number of different dyeing and finishing materials applied in the dyeing/finishing operation controlled by the solvent recovery system during the compliance period.

(vi) Calculate the mass of organic HAP emission reductions for the dyeing/finishing operation controlled by the solvent recovery system during the compliance period using Equation 7 of this section and according to paragraph (f)(5)(vi)(A) of this section:

$$H_{CSR} = (A_{CSR})\left(\frac{R_V}{100}\right) \qquad \text{(Eq. 7)}$$

Where:

sfrattini on LAPJZKW1R2 with $$_JOB
VerDate Sep<11>2014 09:16 Apr 04, 2023 Jkt 256165 PO 00000 Frm 00894 Fmt 8010 Sfmt 8010 Q:\40\256165.XXX PC31
ER29MY03.022<MATH> ER29MY03.023<MATH> ER29MY03.024<MATH>

H_{CSR} = Mass of organic HAP emission reduction for the dyeing/finishing operation controlled by the solvent recovery system during the compliance period, kg.

A_{CSR} = Total mass of organic HAP in the dyeing and finishing material applied in the dyeing/finishing operation controlled by the solvent recovery system during the compliance period, kg, calculated using Equation 7A of this section.

R_V = Volatile organic matter collection and recovery efficiency of the solvent recovery system, percent, from Equation 6 of this section.

(A) Calculate the total mass of organic HAP in the dyeing and finishing materials applied in the dyeing/finishing operation(s) controlled by the solvent recovery system during the compliance period, kg, using Equation 7A of this section:

$$A_{CSR} = \sum_{i=1}^{m} \left(M_{c,i}\right)\left(W_{c,i}\right) \qquad \text{(Eq. 7A)}$$

Where:

A_{CSR} = Total mass of organic HAP in the dyeing and finishing materials applied in the dyeing/finishing operations(s) controlled by the solvent recovery system during the compliance period, kg.

$M_{c,i}$ = Mass of dyeing or finishing material, i, applied during the compliance period in the dyeing/finishing operation(s) controlled by the solvent recovery system, kg.

$W_{c,i}$ = Mass fraction of organic HAP in dyeing or finishing material, i, kg per kg.

m = Number of different dyeing and finishing materials applied during compliance period.

(6) *Calculate the total mass of dyeing and finishing materials*. Determine the total mass of dyeing and finishing materials applied, kg, which is the combined mass of all the dyeing and finishing materials applied during the compliance period in the dyeing/finishing operation(s) for which you use the emission rate with add-on controls option, using Equation 5 of §63.4331.

(7) *Calculate the organic HAP emission rate with add-on controls for the compliance period*. Determine the organic HAP emission rate with add-on controls for the compliance period, kg organic HAP emitted per kg dyeing and finishing materials applied during the compliance period, using Equation 8 of this section.

$$H_{HAP} = \frac{H_e - \sum_{i=1}^{q}\left(H_{C,i}\right) - \sum_{j=1}^{r}\left(H_{CSR,j}\right)}{M_t} \qquad \text{(Eq. 8)}$$

Where:

H_{HAP} = Organic HAP emission rate with add-on controls for the compliance period, kg organic HAP emitted per kg dyeing and finishing materials applied.

H_e = Total mass of organic HAP emissions before add-on controls from all the dyeing and finishing materials applied during the compliance period, kg, determined according to paragraph (f)(2) of this section.

$H_{C,i}$ = Total mass of organic HAP emissions reductions for controlled dyeing/finishing operation, i, not using a liquid-liquid material balance, during the compliance period, kg, from Equation 5 of this section.

$H_{CSR,j}$ = Total mass of organic HAP emissions reductions for dyeing/finishing operation, j, controlled by a solvent recovery system using a liquid-liquid material balance, during the compliance period, kg, from Equation 7 of this section.

M_t = Total mass of dyeing and finishing materials applied during the compliance period, kg, from Equation 5 of §63.4331.

q = Number of controlled dyeing/finishing operations not using a liquid-liquid material balance.

r = Number of dyeing/finishing operations controlled by a solvent recovery system using a liquid-liquid material balance.

(8) *Compliance demonstration*. To demonstrate initial compliance with the emission limit, the organic HAP emission rate with add-on controls for the compliance period, calculated using Equation 8 of this section, must be less than or equal to the applicable emission limit in Table 1 to this subpart. You must keep all records as required

sfrattini on LAPJZKW1R2 with $$_JOB
VerDate Sep<11>2014 09:16 Apr 04, 2023 Jkt 256165 PO 00000 Frm 00895 Fmt 8010 Sfmt 8010 Q:\40\256165.XXX PC31
ER29MY03.025

by §§ 63.4312 and 63.4313. As part of the Notification of Compliance Status required by § 63.4310, you must identify the dyeing/finishing operation(s) for which you used the emission rate with add-on controls option and submit a statement that the dyeing/finishing operation(s) was (were) in compliance with the emission limitations during the initial compliance period because the organic HAP emission rate was less than or equal to the applicable emission limit in Table 1 to this subpart, and that you achieved the operating limits required by § 63.4292 and the work practice standards required by § 63.4293.

[68 FR 32189, May 29, 2003, as amended at 84 FR 9627, Mar. 15, 2019]

§ 63.4342 How do I conduct periodic performance tests and demonstrate continuous compliance with the emission limitations?

(a) To demonstrate continuous compliance with the applicable emission limit in Table 1 to this subpart, the organic HAP emission rate for each compliance period, determined according to § 63.4341(e) for web coating/printing operations and according to § 63.4341(f) for dyeing/finishing operations, must be equal to or less than the applicable emission limit in Table 1 to this subpart. Each month following the initial compliance period described in § 63.4340 is a compliance period consisting of that month and the preceding 11 months. You must perform the calculations in § 63.4341 on a monthly basis.

(b) If the organic HAP emission rate with add-on controls for any compliance period exceeded the applicable emission limit in Table 1 to this subpart, this is a deviation from the emission limitation for that compliance period and must be reported as specified in §§ 63.4310(c)(6) and 63.4311(a)(7).

(c) You must demonstrate continuous compliance with each operating limit required by § 63.4292 that applies to you, as specified in Table 2 to this subpart, and you must conduct periodic performance tests as specified in paragraph (c)(3) of this section.

(1) If an operating parameter is out of the allowed range specified in Table 2 to this subpart, this is a deviation from the operating limit that must be reported as specified in §§ 63.4310(c)(6) and 63.4311(a)(7).

(2) If an operating parameter deviates from the operating limit specified in Table 2 to this subpart, then you must assume that the emission capture system and add-on control device were achieving zero efficiency during the time period of the deviation. For the purposes of completing the compliance calculations specified in § 63.4341 (e)(4) and (f)(4), you must treat the regulated materials applied during a deviation on a controlled coating/printing or dyeing/finishing operation as if they were applied on an uncontrolled coating/printing or dyeing/finishing operation for the time period of the deviation, as indicated in Equation 1 of § 63.4341 for a web coating/printing operation, and in Equation 5 of § 63.4341 for a dyeing/finishing operation.

(3) Except for solvent recovery systems for which you conduct liquid-liquid material balances according to § 63.4351(d)(5), within 5 years following the previous performance test, you must conduct according to the procedures in §§ 63.4360, 63.4361, and 63.4362 a periodic performance test of each capture system and add-on control device used, and you must establish the operating limits required by § 63.4292. You must conduct the first periodic performance test and establish the operating limits required by § 63.4292 before March 15, 2022, unless you are already required to complete periodic performance tests as a requirement of renewing your facility's operating permit under 40 CFR part 70 or 40 CFR part 71 and have conducted a performance test on or after March 15, 2017. Thereafter you must conduct a performance test no later than 5 years following the previous performance test. Operating limits must be confirmed or reestablished during each performance test.

(d) You must meet the requirements for bypass lines in § 63.4364(b) for controlled coating/printing or dyeing/finishing operations for which you do not conduct liquid-liquid material balances. If any bypass line is opened and emissions are diverted to the atmosphere when the web coating/printing or dyeing/finishing operation is running, this is a deviation that must be reported as specified in §§ 63.4310(c)(6) and

sfrattini on LAPJZKW1R2 with $$_JOB
VerDate Sep<11>2014 09:16 Apr 04, 2023 Jkt 256165 PO 00000 Frm 00896 Fmt 8010 Sfmt 8010 Q:\40\256165.XXX PC31

63.4311(a)(7). For the purposes of completing the compliance calculations specified in § 63.4341(e)(4), you must treat the coating, printing, thinning, and cleaning materials applied during a deviation on a controlled web coating/printing operation as if they were used on an uncontrolled web coating/printing operation for the time period of the deviation, as indicated in Equation 1 of § 63.4341. For the purposes of completing the compliance calculations specified in § 63.4341(f)(4), you must treat the dyeing and finishing materials applied during a deviation on a controlled dyeing/finishing operation as if they were used on an uncontrolled dyeing/finishing operation for the time period of the deviation, as indicated in Equation 5 of § 63.4341.

(e) You must demonstrate continuous compliance with the work practice standards in § 63.4293. If you did not develop a work practice plan, or you did not implement the plan, or you did not keep the records required by § 63.4312(j)(8), this is a deviation from the work practice standards that must be reported as specified in §§ 63.4310(c)(6) and 63.4311(a)(7).

(f) As part of each semiannual compliance report required in § 63.4311, you must identify the coating/printing and dyeing/finishing operation(s) for which you use the emission rate with add-on controls option. If there were no deviations from the applicable emission limitations in §§ 63.4290, 63.4292, and 63.4293, you must submit a statement that, as appropriate, the web coating/printing operations or the dyeing/finishing operations were in compliance with the emission limitations during the reporting period because the organic HAP emission rate for each compliance period was less than or equal to the applicable emission limit in Table 1 to this subpart, and you achieved the operating limits required by § 63.4292 and the work practice standards required by § 63.4293 during each compliance period.

(g) [Reserved]

(h) Before September 12, 2019, consistent with §§ 63.6(e) and 63.7(e)(1), deviations that occur during a period of startup, shutdown, or malfunction of the emission capture system, add-on control device, or web coating/printing or dyeing/finishing operation that may affect emission capture or control device efficiency are not violations if you demonstrate to the Administrator's satisfaction that you were operating in accordance with § 63.6(e)(1). The Administrator will determine whether deviations that occur during a period of startup, shutdown, or malfunction are violations according to the provisions in § 63.6(e). On and after September 12, 2019, as specified in § 63.4300(b), at all times, the owner or operator must operate and maintain any affected source, including associated air pollution control equipment and monitoring equipment, in a manner consistent with safety and good air pollution control practices for minimizing emissions, and determination of whether a source is operating in compliance with operation and maintenance requirements will be based on information available to the Administrator.

(i) [Reserved]

(j) You must maintain records as specified in §§ 63.4312 and 63.4313.

[68 FR 32189, May 29, 2003, as amended at 71 FR 20465, Apr. 20, 2006; 84 FR 9628, Mar. 15, 2019]

COMPLIANCE REQUIREMENTS FOR THE ORGANIC HAP OVERALL CONTROL EFFICIENCY AND OXIDIZER OUTLET ORGANIC HAP CONCENTRATION OPTIONS

§ 63.4350 By what date must I conduct performance tests and other initial compliance demonstrations?

(a) *New and reconstructed affected sources.* For a new or reconstructed affected source, you must meet the requirements of paragraphs (a)(1) through (4) of this section.

(1) All emission capture systems, add-on control devices, and CPMS must be installed and operating no later than the applicable compliance date specified in § 63.4283. Except for solvent recovery systems for which you conduct liquid-liquid material balances according to § 63.4351(d)(5), you must conduct a performance test of each capture system and add-on control device according to the procedures in §§ 63.4360, 63.4361, and 63.4362, and establish the operating limits required by § 63.4292, within 180 days of the applicable compliance date specified in

sfrattini on LAPJZKW1R2 with $$_JOB
VerDate Sep<11>2014 09:16 Apr 04, 2023 Jkt 256165 PO 00000 Frm 00897 Fmt 8010 Sfmt 8010 Q:\40\256165.XXX PC31

§ 63.4283. For a solvent recovery system for which you conduct liquid-liquid material balances according to § 63.4351(d)(5), you must initiate the first material balance no later than the applicable compliance date specified in § 63.4283.

(2) You must develop and begin implementing the work practice plan required by § 63.4293 no later than the compliance date specified in § 63.4283.

(3) You must complete the compliance demonstration for the initial compliance period according to the requirements of § 63.4351. The initial compliance period begins on the applicable compliance date specified in § 63.4283 and ends on the last day of the first full month after the compliance date, or the date you conduct the performance tests of the emission capture systems and add-on control devices, or initiate the first liquid-liquid material balance for a solvent recovery system, whichever is later. The initial compliance demonstration includes the results of emission capture system and add-on control device performance tests conducted according to §§ 63.4360, 63.4361, and 63.4362; results of liquid-liquid material balances conducted according to § 63.4351(d)(5); calculations according to § 63.4351 and supporting documentation showing that during the initial compliance period either the organic HAP overall control efficiency was equal to or greater than the applicable overall control efficiency limit in Table 1 to this subpart or the oxidizer outlet organic HAP concentration was no greater than 20 parts per million by volume (ppmv) on a dry basis; the operating limits established during the performance tests and the results of the continuous parameter monitoring required by § 63.4364; and documentation of whether you developed and implemented the work practice plan required by § 63.4293.

(4) You do not need to comply with the operating limits for the emission capture system and add-on control device required by § 63.4292 until after you have completed the performance tests specified in paragraph (a)(1) of this section. Instead, you must maintain a log detailing the operation and maintenance of the emission capture system, add-on control device, and continuous parameter monitors during the period between the compliance date and the performance test. You must begin complying with the operating limits for your affected source on the date you complete the performance tests specified in paragraph (a)(1) of this section. This requirement does not apply to solvent recovery systems for which you conduct liquid-liquid material balances according to the requirements of § 63.4351(d)(5).

(b) *Existing sources.* For an existing affected source, you must meet the requirements of paragraphs (b)(1) through (3) of this section.

(1) All emission capture systems, add-on control devices, and CPMS must be installed and operating no later than the applicable compliance date specified in § 63.4283. Except for solvent recovery systems for which you conduct liquid-liquid material balances according to § 63.4351(d)(5), you must conduct a performance test of each capture system and add-on control device according to the procedures in §§ 63.4360, 63.4361, and 63.4362, and establish the operating limits required by § 63.4292, within 180 days of the compliance date specified in § 63.4283. For a solvent recovery system for which you conduct liquid-liquid material balances according to § 63.4351(d)(5), you must initiate the first material balance no later than the compliance date specified in § 63.4283.

(2) You must develop and begin implementing the work practice plan required by § 63.4293 no later than the compliance date specified in § 63.4283.

(3) You must complete the compliance demonstration for the initial compliance period according to the requirements of § 63.4351. The initial compliance period begins on the applicable compliance date specified in § 63.4283 and ends on the last day of the first full month after the compliance date. The initial compliance demonstration includes the results of emission capture system and add-on control device performance tests conducted according to §§ 63.4360, 63.4361, and 63.4362; results of liquid-liquid material balances conducted according to § 63.4351(d)(5); calculations according to § 63.4351 and supporting documentation showing that during the initial compliance period

sfrattini on LAPJZKW1R2 with $$_JOB
VerDate Sep<11>2014 09:16 Apr 04, 2023 Jkt 256165 PO 00000 Frm 00898 Fmt 8010 Sfmt 8010 Q:\40\256165.XXX PC31

the organic HAP overall control efficiency was equal to or greater than the applicable organic HAP overall control efficiency limit in Table 1 to this subpart or the oxidizer outlet organic HAP concentration was no greater than 20 ppmv on a dry basis and the efficiency of the capture system was 100 percent; the operating limits established during the performance tests and the results of the continuous parameter monitoring required by §63.4364; and documentation of whether you developed and implemented the work practice plan required by §63.4293.

[68 FR 32189, May 29, 2003, as amended at 84 FR 9628, Mar. 15, 2019]

§63.4351 How do I demonstrate initial compliance?

(a) You may use the organic HAP overall control efficiency option or the oxidizer outlet organic HAP concentration option for any individual web coating/printing operation, for any group of web coating/printing operations in the affected source, or for all of the web coating/printing operations in the affected source. You may include both controlled and uncontrolled web coating/printing operations in a group for which you use the organic HAP overall control efficiency option. You must use either the compliant material option, the emission rate without add-on controls option, or the emission rate with add-on controls option for any web coating/printing operation(s) in the affected source for which you do not use either the organic HAP overall control efficiency option or the oxidizer outlet organic HAP concentration option. To demonstrate initial compliance, any web coating/printing operation for which you use the organic HAP overall control efficiency option must meet the applicable organic HAP overall control efficiency limitations in Table 1 to this subpart according to the procedures in paragraph (d) of this section. Any web coating/printing operation for which you use the oxidizer outlet organic HAP concentration option must meet the 20 ppmv on a dry basis limit and achieve 100 percent capture efficiencies according to the procedures in paragraph (e) of this section. To demonstrate initial compliance with either option, you also must meet the applicable operating limits in §63.4292 according to the procedures in paragraph (b) of this section and the work practice standards in §63.4293 according to the procedures in paragraph (c) of this section. When calculating the organic HAP overall control efficiency according to this section, do not include any coating, printing, thinning, or cleaning materials applied on web coating/printing operations for which you use the compliant material option, the emission rate without add-on controls option, the emission rate with add-on controls option, or the oxidizer outlet organic HAP concentration option. You do not need to redetermine the mass of organic HAP in coating, printing, thinning, or cleaning materials that have been reclaimed onsite and reused in web coating/printing operation(s) for which you use the organic HAP overall control efficiency option.

(b) *Compliance with operating limits.* Except as provided in §63.4350(a)(4), and except for solvent recovery systems for which you conduct liquid-liquid material balances according to §63.4351(d)(5), you must establish and demonstrate continuous compliance during the initial compliance period with the operating limits required by §63.4292, using the procedures specified in §§63.4363 and 63.4364.

(c) *Compliance with work practice requirements.* You must develop, implement, and document your implementation of the work practice plan required by §63.4293 during the initial compliance period as specified in §63.4312.

(d) *Compliance with organic HAP overall control efficiency limits.* You must follow the procedures in paragraphs (d)(1) through (7) of this section to demonstrate compliance with the applicable organic HAP overall control efficiency limit in Table 1 to this subpart.

(1) *Determine the mass fraction of organic HAP and mass of coating or printing materials.* Follow the procedures specified in §63.4331(a)(1) and (3) to determine the mass fraction of organic HAP and mass of each coating, printing, thinning, and cleaning material applied during the compliance period.

(2) *Calculate the total mass of organic HAP emissions before add-on controls.*

sfrattini on LAPJZKW1R2 with $$_JOB
VerDate Sep<11>2014 09:16 Apr 04, 2023 Jkt 256165 PO 00000 Frm 00899 Fmt 8010 Sfmt 8010 Q:\40\256165.XXX PC31

Using Equation 1 of § 63.4331, calculate the total mass of organic HAP emissions before add-on controls from all coating, printing, thinning, and cleaning materials applied during the compliance period minus the organic HAP in certain waste materials in the web coating/printing operation or group of web coating/printing operations for which you use the organic HAP overall control efficiency option.

(3) *Calculate the organic HAP emissions reductions for each controlled web coating/printing operation.* Determine the mass of organic HAP emissions reduced for each controlled web coating/printing operation during the compliance period. The emissions reductions determination quantifies the total organic HAP emissions that pass through the emission capture system and are destroyed or removed by the add-on control device. Use the procedures in paragraph (d)(4) of this section to calculate the mass of organic HAP emissions reductions for each controlled web coating/printing operation using an emission capture system and add-on control device other than a solvent recovery system for which you conduct liquid-liquid material balances. For each controlled web coating/printing operation using a solvent recovery system for which you conduct a liquid-liquid material balance, use the procedures in paragraph (d)(5) of this section to calculate the organic HAP emissions reductions.

(4) *Calculate the organic HAP emissions reductions for controlled web coating/printing operations not using liquid-liquid material balance.* For each controlled web coating/printing operation using an emission capture system and add-on control device other than a solvent recovery system for which you conduct liquid-liquid material balances, calculate the organic HAP emissions reductions using Equation 1 of § 63.4341. The equation applies the emission capture system efficiency and add-on control device efficiency to the mass of organic HAP contained in the coating, printing, thinning, and cleaning materials applied in the web coating/printing operation served by the emission capture system and add-on control device during the compliance period. For any period of time a deviation specified in § 63.4352(c) or (d) occurs in the controlled web coating/printing operation, then you must assume zero efficiency for the emission capture system and add-on control device. Equation 1 of § 63.4341 treats the coating, printing, thinning, and cleaning materials applied during such a deviation as if they were applied on an uncontrolled web coating/printing operation for the time period of the deviation.

(i) Calculate the total mass of organic HAP in the coating and printing material(s) applied in the controlled web coating/printing operation during the compliance period, kg, using Equation 1A of § 63.4341.

(ii) Calculate the total mass of organic HAP in the thinning and cleaning materials applied in the controlled web coating/printing operation(s) during the compliance period, kg, using Equation 1B of § 63.4341.

(iii) Calculate the mass of organic HAP in the coating, printing, thinning, and cleaning materials applied in the controlled web coating/printing operation during deviations specified in § 63.4352(c) and (d), using Equation 1C of § 63.4341.

(5) *Calculate the organic HAP emissions reductions for controlled web coating/printing operations using liquid-liquid material balance.* For each controlled web coating/printing operation using a solvent recovery system for which you conduct liquid-liquid material balances, calculate the organic HAP emissions reductions by applying the volatile organic matter collection and recovery efficiency to the mass of organic HAP contained in the coating, printing, thinning, and cleaning materials applied in the web coating/printing operation controlled by the solvent recovery system during the compliance period. Perform a liquid-liquid material balance for the compliance period as specified in paragraphs (d)(5)(i) through (vi) of this section.

(i) For each solvent recovery system, install, calibrate, maintain, and operate according to the manufacturer's specifications, a device that indicates the cumulative amount of volatile organic matter recovered by the solvent

sfrattini on LAPJZKW1R2 with $$_JOB
VerDate Sep<11>2014 09:16 Apr 04, 2023 Jkt 256165 PO 00000 Frm 00900 Fmt 8010 Sfmt 8010 Q:\40\256165.XXX PC31

recovery system for the compliance period. The device must be initially certified by the manufacturer to be accurate to within ±2.0 percent of the mass of volatile organic matter recovered.

(ii) For each solvent recovery system, determine the mass of volatile organic matter recovered for the compliance period, kg, based on measurement with the device required in paragraph (d)(5)(i) of this section.

(iii) Determine the mass fraction of volatile organic matter for each coating and printing material applied in the web coating/printing operation controlled by the solvent recovery system during the compliance period, kg volatile organic matter per kg coating and printing material. You may determine the volatile organic matter mass fraction using Method 24 in appendix A–7 of part 60, ASTM D2369–10 (R2015), ''Test Method for Volatile Content of Coatings'' (incorporated by reference, *see* §63.14), or an EPA approved alternative method. Alternatively, you may use information provided by the manufacturer or supplier of the coating or printing material. In the event of any inconsistency between information provided by the manufacturer or supplier and the results of Method 24, ASTM D2369–10 (R2015), or an approved alternative method, the test method results will govern.

(iv) Measure the mass of each coating, printing, thinning, and cleaning material applied in the web coating/printing operation controlled by the solvent recovery system during the compliance period, kg.

(v) For the compliance period, calculate the solvent recovery system's volatile organic matter collection and recovery efficiency using Equation 2 of §63.4341.

(vi) Calculate the mass of organic HAP emissions reductions for the web coating/printing operation controlled by the solvent recovery system during the compliance period, using Equation 3 of §63.4341.

(6) *Calculate the organic HAP overall control efficiency*. Determine the organic HAP overall control efficiency, kg organic HAP emissions reductions per kg organic HAP emissions before add-on controls during the compliance period, using Equation 1 of this section.

$$E_{HAP} = \frac{\sum_{i=1}^{q}\left(H_{C,i}\right) + \sum_{j=1}^{r}\left(H_{CSR,j}\right)}{H_e} \times 100 \qquad \text{(Eq. 1)}$$

Where:

E_{HAP} = Organic HAP overall control efficiency for the compliance period, kg organic HAP emissions reductions per kg organic HAP emissions before add-on controls during the compliance period.

$H_{C,i}$ = Total mass of organic HAP emissions reductions for controlled web coating/printing operation, i, during the compliance period, kg, from Equation 1 of §63.4341.

$H_{CSR,j}$ = Total mass of organic HAP emissions reductions for controlled web coating/printing operation, j, during the compliance period, kg, from Equation 3 of §63.4341.

H_e = Total mass of organic HAP emissions before add-on controls from all the coating, printing, thinning, and cleaning materials applied during the compliance period, kg, determined according to paragraph (d)(2) of this section.

q = Number of controlled web coating/printing operations except those controlled with a solvent recovery system.

r = Number of web coating/printing operations controlled with a solvent recovery system.

(7) *Compliance demonstration*. To demonstrate initial compliance with the organic HAP overall control efficiency in Table 1 to this subpart, the organic HAP overall control efficiency calculated using Equation 1 of this section must be at least 98 percent for new or reconstructed affected sources and at least 97 percent for existing affected sources. You must keep all records as required by §§63.4312 and 63.4313. As part of the Notification of Compliance

sfrattini on LAPJZKW1R2 with $$_JOB
VerDate Sep<11>2014 09:16 Apr 04, 2023 Jkt 256165 PO 00000 Frm 00901 Fmt 8010 Sfmt 8010 Q:\40\256165.XXX PC31
ER29MY03.027

Status required by § 63.4310, you must identify the web coating/printing operation(s) for which you used the organic HAP overall control efficiency option and submit a statement that the web coating/printing operation(s) was (were) in compliance with the emission limitations during the initial compliance period because the organic HAP overall control efficiency was greater than or equal to the applicable organic HAP overall control efficiency in Table 1 to this subpart, and you achieved the operating limits required by § 63.4292 and the work practice standards required by § 63.4293.

(e) *Compliance with oxidizer outlet organic HAP concentration limit.* You must follow the procedures in paragraphs (e)(1) through (3) of this section to demonstrate compliance with the oxidizer outlet organic HAP concentration limit of no greater than 20 ppmv on a dry basis.

(1) *Install and operate a PTE.* Install and operate a PTE around each work station and associated drying or curing oven in the web coating/printing operation. An enclosure that meets the requirements in § 63.4361(a) is considered a PTE. Route all organic HAP emissions from each PTE to an oxidizer.

(2) *Determine oxidizer outlet organic HAP concentration.* Determine oxidizer outlet organic HAP concentration through performance tests using the procedures in § 63.4362(a) and (b).

(3) *Compliance demonstration.* To demonstrate initial compliance with the oxidizer outlet organic HAP concentration limit in Table 1 to this subpart, the oxidizer outlet organic HAP concentration must be no greater than 20 ppmv on a dry basis and the efficiency of the capture system must be 100 percent. You must keep all records as required by §§ 63.4312 and 63.4313. As part of the Notification of Compliance Status required by § 63.4310, you must identify the web coating/printing operation(s) for which you used the oxidizer outlet organic HAP concentration option and submit a statement that the web coating/printing operation(s) was (were) in compliance with the emission limitations during the initial compliance period because the oxidizer outlet organic HAP concentration was no greater than 20 ppmv on a dry basis, the efficiency of the capture system was 100 percent, and you achieved the operating limits required by § 63.4292 and the work practice standards required by § 63.4293.

[68 FR 32189, May 29, 2003, as amended at 84 FR 9629, Mar. 15, 2019]

§ 63.4352 How do I demonstrate continuous compliance with the emission limitations?

(a) You must meet all the requirements of this section to demonstrate continuous compliance with the organic HAP overall control efficiency. The organic HAP overall control efficiency for each compliance period, determined according to the procedures in § 63.4351(d), must be equal to or greater than the applicable organic HAP overall control efficiency limit in Table 1 to this subpart. Each month following the initial compliance period described in § 63.4350 is a compliance period. You must perform the calculations in § 63.4351(d) on a monthly basis. You must meet the applicable requirements of paragraphs (c) through (j) of this section to demonstrate continuous compliance with the oxidizer outlet organic HAP concentration limit.

(b) If the organic HAP overall control efficiency for any compliance period failed to meet the applicable organic HAP overall control efficiency in Table 1 to this subpart, this is a deviation from the emission limitation for that compliance period and must be reported as specified in §§ 63.4310(c)(6) and 63.4311(a)(7).

(c) You must demonstrate continuous compliance with each operating limit required by § 63.4292 that applies to you, as specified in Table 2 to this subpart.

(1) If an operating parameter is out of the allowed range specified in Table 2 to this subpart, this is a deviation from the operating limit that must be reported as specified in §§ 63.4310(c)(6) and 63.4311(a)(7).

(2) If an operating parameter deviates from the operating limit specified in Table 2 to this subpart, then you must assume that the emission capture system and add-on control device were achieving zero efficiency during the time period of the deviation. For the purposes of completing the compliance calculations specified in § 63.4351(d)(4),

sfrattini on LAPJZKW1R2 with $$_JOB
VerDate Sep<11>2014 09:16 Apr 04, 2023 Jkt 256165 PO 00000 Frm 00902 Fmt 8010 Sfmt 8010 Q:\40\256165.XXX PC31

you must treat the coating, printing, thinning, and cleaning materials applied during a deviation on a controlled web coating/printing operation as if they were applied on an uncontrolled web coating/printing operation for the time period of the deviation as indicated in Equation 1 of § 63.4341.

(d) You must meet the requirements for bypass lines in § 63.4364(b) for controlled web coating/printing operations for which you do not conduct liquid-liquid material balances. If any bypass line is opened and emissions are diverted to the atmosphere when the web coating/printing operation is running, this is a deviation that must be reported as specified in §§ 63.4310(c)(6) and 63.4311(a)(7). For the purposes of completing the compliance calculations specified in § 63.4351(d)(4), you must treat the coating, printing, thinning, and cleaning materials applied during a deviation on a controlled web coating/printing operation as if they were applied on an uncontrolled web coating/printing operation for the time period of the deviation as indicated in Equation 1 of § 63.4341.

(e) You must demonstrate continuous compliance with the work practice standards in § 63.4293. If you did not develop a work practice plan, or you did not implement the plan, or you did not keep the records required by § 63.4312(j)(8), this is a deviation from the work practice standards that must be reported as specified in §§ 63.4310(c)(6) and 63.4311(a)(7).

(f) As part of each semiannual compliance report required in § 63.4311, you must identify the web coating/printing operation(s) for which you use the organic HAP overall control efficiency option or the oxidizer outlet organic HAP concentration option. If there were no deviations from the organic HAP overall control efficiency limitations, submit a statement that you were in compliance with the emission limitations during the reporting period because the organic HAP overall control efficiency for each compliance period was greater than or equal to the applicable organic HAP overall control efficiency in Table 1 to this subpart, and you achieved the operating limits required by § 63.4292 and the work practice standards required by § 63.4293 during each compliance period. If there were no deviations from the oxidizer outlet organic HAP concentration limit, submit a statement that you were in compliance with the oxidizer outlet organic HAP concentration limit, the efficiency of the capture system is 100 percent, and you achieved the operating limits required by § 63.4292 and the work practice standards required by § 63.4293 during each compliance period.

(g) [Reserved]

(h) Before September 12, 2019, consistent with §§ 63.6(e) and 63.7(e)(1), deviations that occur during a period of startup, shutdown, or malfunction of the emission capture system, add-on control device, or web coating/printing operation that may affect emission capture or control device efficiency are not violations if you demonstrate to the Administrator's satisfaction that you were operating in accordance with § 63.6(e)(1). The Administrator will determine whether deviations that occur during a period of startup, shutdown, or malfunction are violations according to the provisions in § 63.6(e). On and after September 12, 2019, as specified in § 63.4300(b), at all times, the owner or operator must operate and maintain any affected source, including associated air pollution control equipment and monitoring equipment, in a manner consistent with safety and good air pollution control practices for minimizing emissions, and determination of whether a source is operating in compliance with operation and maintenance requirements will be based on information available to the Administrator.

(i) [Reserved]

(j) You must maintain records as specified in §§ 63.4312 and 63.4313.

[68 FR 32189, May 29, 2003, as amended at 71 FR 20465, Apr. 20, 2006; 84 FR 9629, Mar. 15, 2019]

PERFORMANCE TESTING AND MONITORING REQUIREMENTS

§ 63.4360 What are the general requirements for performance tests?

(a) You must conduct each performance test required by § 63.4340 or § 63.4350 according to the requirements in this section, unless you obtain a

sfrattini on LAPJZKW1R2 with $$_JOB
VerDate Sep<11>2014 09:16 Apr 04, 2023 Jkt 256165 PO 00000 Frm 00903 Fmt 8010 Sfmt 8010 Q:\40\256165.XXX PC31

waiver of the performance test according to the provisions in § 63.7(h).

(1) *Representative web coating/printing or dyeing/finishing operation operating conditions.* You must conduct the performance test under representative operating conditions for the web coating/printing or dyeing/finishing operation. Operations during periods of startup, shutdown, or nonoperation do not constitute representative conditions for purposes of conducting a performance test. The owner or operator may not conduct performance tests during periods of malfunction. You must record the process information that is necessary to document operating conditions during the test and explain why the conditions represent normal operation. Upon request, you must make available to the Administrator such records as may be necessary to determine the conditions of performance tests.

(2) *Representative emission capture system and add-on control device operating conditions.* You must conduct the performance test when the emission capture system and add-on control device are operating at a representative flow rate, and the add-on control device is operating at a representative inlet concentration. You must record information that is necessary to document emission capture system and add-on control device operating conditions during the test and explain why the conditions represent normal operation.

(b) You must conduct each performance test of an emission capture system according to the requirements in § 63.4361. You must conduct each performance test of an add-on control device according to the requirements in § 63.4362.

[68 FR 32189, May 29, 2003, as amended at 84 FR 9630, Mar. 15, 2019]

§ 63.4361 How do I determine the emission capture system efficiency?

You must use the procedures and test methods in this section to determine capture efficiency as part of the performance test required by § 63.4340 or § 63.4350.

(a) *Assuming 100 percent capture efficiency.* You may assume the capture system efficiency is 100 percent if both of the conditions in paragraphs (a)(1) and (2) of this section are met.

(1) The capture system meets the criteria in Method 204 of appendix M to 40 CFR part 51 for a PTE and directs all the exhaust gases from the enclosure to an add-on control device.

(2) All regulated materials applied in the web coating/printing or dyeing/finishing operation are applied within the capture system; regulated material solvent flash-off, curing, and drying occurs within the capture system; and the removal or evaporation of cleaning materials from the web coating/printing operation surfaces they are applied to occurs within the capture system. For example, this criterion is not met if the web enters the open shop environment when moving between the application station and a curing oven.

(b) *Measuring capture efficiency.* If the capture system does not meet both of the criteria in paragraphs (a)(1) and (2) of this section, then you must use one of the three protocols described in paragraphs (c), (d), and (e) of this section to measure capture efficiency. The capture efficiency measurements use TVH capture efficiency as a surrogate for organic HAP capture efficiency. For the protocols in paragraphs (c) and (d) of this section, the capture efficiency measurement must consist of three test runs. Each test run must be at least 3 hours duration or the length of a production run, up to 8 hours.

(c) *Liquid-to-uncaptured-gas protocol using a temporary total enclosure or building enclosure.* The liquid-to-uncaptured-gas protocol compares the mass of liquid TVH in regulated materials applied in the web coating/printing or dyeing/finishing operation to the mass of TVH emissions not captured by the emission capture system. Use a temporary total enclosure or a building enclosure and the procedures in paragraphs (c)(1) through (6) of this section to measure emission capture system efficiency using the liquid-to-uncaptured-gas protocol.

(1) Either use a building enclosure or construct an enclosure around the web coating/printing or dyeing/finishing operation where regulated materials are applied, and all areas where emissions from these applied regulated materials subsequently occur, such as flash-off,

sfrattini on LAPJZKW1R2 with $$_JOB
VerDate Sep<11>2014 09:16 Apr 04, 2023 Jkt 256165 PO 00000 Frm 00904 Fmt 8010 Sfmt 8010 Q:\40\256165.XXX PC31

curing, and drying areas. The areas of the web coating/printing or dyeing/finishing operation where capture devices collect emissions for routing to an add-on control device, such as the entrance and exit areas of an oven or tenter frame, must also be inside the enclosure. The enclosure must meet the applicable definition of a temporary total enclosure or building enclosure in Method 204 of appendix M to 40 CFR part 51.

(2) Use Method 204A or 204F of appendix M to 40 CFR part 51 to determine the mass fraction of TVH liquid input from each regulated material used in the web coating/printing or dyeing/finishing operation during each capture efficiency test run. To make the determination, substitute TVH for each occurrence of the term volatile organic compounds (VOC) in the methods.

(3) Use Equation 1 of this section to calculate the total mass of TVH liquid input from all the regulated materials applied in the web coating/printing or dyeing/finishing operation during each capture efficiency test run.

$$TVH_{applied} = \sum_{i=1}^{n} \left(TVH_i\right)\left(M_i\right) \qquad \text{(Eq. 1)}$$

Where:

$TVH_{applied}$ = Mass of liquid TVH in regulated materials applied in the web coating/printing or dyeing/finishing operation during the capture efficiency test run, kg.

TVH_i = Mass fraction of TVH in regulated material, i, that is applied in the web coating/printing or dyeing/finishing operation during the capture efficiency test run, kg TVH per kg material.

M_i = Total mass of regulated material, i, applied in the web coating/printing or dyeing/finishing operation during the capture efficiency test run, kg.

n = Number of different regulated materials applied in the web coating/printing or dyeing/finishing operation during the capture efficiency test run.

(4) Use Method 204D or E of appendix M to 40 CFR part 51 to measure the total mass, kg, of TVH emissions that are not captured by the emission capture system; they are measured as they exit the temporary total enclosure or building enclosure during each capture efficiency test run. To make the measurement, substitute TVH for each occurrence of the term VOC in the methods.

(i) Use Method 204D if the enclosure is a temporary total enclosure.

(ii) Use Method 204E if the enclosure is a building enclosure. During the capture efficiency measurement, all organic compound-emitting operations inside the building enclosure, other than the web coating/printing or dyeing/finishing operation for which capture efficiency is being determined, must be shut down, but all fans and blowers must be operating normally.

(5) For each capture efficiency test run, determine the percent capture efficiency of the emission capture system using Equation 2 of this section:

$$CE = \frac{\left(TVH_{applied} - TVH_{uncaptured}\right)}{TVH_{applied}} \times 100 \qquad \text{(Eq. 2)}$$

Where:

CE = Capture efficiency of the emission capture system vented to the add-on control device, percent.

$TVH_{applied}$ = Total mass of TVH liquid input applied in the web coating/printing or dyeing/finishing operation during the capture efficiency test run, kg.

$TVH_{uncaptured}$ = Total mass of TVH that is not captured by the emission capture system and that exits from the temporary total enclosure or building enclosure during the capture efficiency test run, kg.

sfrattini on LAPJZKW1R2 with $$_JOB
VerDate Sep<11>2014 09:16 Apr 04, 2023 Jkt 256165 PO 00000 Frm 00905 Fmt 8010 Sfmt 8010 Q:\40\256165.XXX PC31
ER29MY03.028<.GPH> ER29MY03.029</GPH>

(6) Determine the capture efficiency of the emission capture system as the average of the capture efficiencies measured in the three test runs.

(d) *Gas-to-gas protocol using a temporary total enclosure or a building enclosure.* The gas-to-gas protocol compares the mass of TVH emissions captured by the emission capture system to the mass of TVH emissions not captured. Use a temporary total enclosure or a building enclosure and the procedures in paragraphs (d)(1) through (5) of this section to measure emission capture system efficiency using the gas-to-gas protocol.

(1) Either use a building enclosure or construct an enclosure around the web coating/printing or dyeing/finishing operation where regulated materials are applied, and all areas where emissions from these applied regulated materials subsequently occur, such as flash-off, curing, and drying areas. The areas of the web coating/printing or dyeing/finishing operation where capture devices collect emissions generated by the web coating/printing or dyeing/finishing operation for routing to an add-on control device, such as the entrance and exit areas of an oven or a tenter frame, must also be inside the enclosure. The enclosure must meet the applicable definition of a temporary total enclosure or building enclosure in Method 204 of appendix M to 40 CFR part 51.

(2) Use Method 204B or 204C of appendix M to 40 CFR part 51 to measure the total mass, kg, of TVH emissions captured by the emission capture system during each capture efficiency test run as measured at the inlet to the add-on control device. To make the measurement, substitute TVH for each occurrence of the term VOC in the methods.

(i) The sampling points for the Method 204B or 204C measurement must be upstream from the add-on control device and must represent total emissions routed from the capture system and entering the add-on control device.

(ii) If multiple emission streams from the capture system enter the add-on control device without a single common duct, then the emissions entering the add-on control device must be simultaneously measured in each duct and the total emissions entering the add-on control device must be determined.

(3) Use Method 204D or 204E of appendix M to 40 CFR part 51 to measure the total mass, kg, of TVH emissions that are not captured by the emission capture system; they are measured as they exit the temporary total enclosure or building enclosure during each capture efficiency test run. To make the measurement, substitute TVH for each occurrence of the term VOC in the methods.

(i) Use Method 204D if the enclosure is a temporary total enclosure.

(ii) Use Method 204E if the enclosure is a building enclosure. During the capture efficiency measurement, all organic compound-emitting operations inside the building enclosure, other than the web coating/printing or dyeing/finishing operation for which capture efficiency is being determined, must be shut down, but all fans and blowers must be operating normally.

(4) For each capture efficiency test run, determine the percent capture efficiency of the emission capture system using Equation 3 of this section:

$$CE = \frac{TVH_{captured}}{\left(TVH_{captured} + TVH_{uncaptured}\right)} \times 100 \qquad \text{(Eq. 3)}$$

Where:

CE = Capture efficiency of the emission capture system vented to the add-on control device, percent.

$TVH_{captured}$ = Total mass of TVH captured by the emission capture system as measured at the inlet to the add-on control device during the emission capture efficiency test run, kg.

$TVH_{uncaptured}$ = Total mass of TVH that is not captured by the emission capture system and that exits from the temporary total enclosure or building enclosure during the capture efficiency test run, kg.

sfrattini on LAPJZKW1R2 with $$_JOB
VerDate Sep<11>2014 09:16 Apr 04, 2023 Jkt 256165 PO 00000 Frm 00906 Fmt 8010 Sfmt 8010 Q:\40\256165.XXX PC31
ER29MY03.030

(5) Determine the capture efficiency of the emission capture system as the average of the capture efficiencies measured in the three test runs.

(e) *Alternative capture efficiency protocol.* As an alternative to the procedures specified in paragraphs (c) and (d) of this section, you may determine capture efficiency using any other capture efficiency protocol and test methods that satisfy the criteria of either the DQO or LCL approach as described in appendix A to subpart KK of this part.

§ 63.4362 How do I determine the add-on control device emission destruction or removal efficiency?

You must use the procedures and test methods in this section to determine the add-on control device emission destruction or removal efficiency as part of the performance test required by §§ 63.4340 and 63.4350. You must conduct three test runs as specified in § 63.7(e)(3) and each test run must last at least 1 hour.

(a) For all types of add-on control devices, use the test methods as specified in paragraphs (a)(1) through (5) of this section.

(1) Use Method 1 or 1A in appendix A–1 of part 60, as appropriate, to select sampling sites and velocity traverse points.

(2) Use Method 2, 2A, 2C, 2D, or 2F in appendix A–1, or Method 2G in appendix A–2, of part 60, as appropriate, to measure gas volumetric flow rate.

(3) Use Method 3, 3A, or 3B in appendix A of part 60, as appropriate, for gas analysis to determine dry molecular weight. You may also use as an alternative to Method 3B, the manual method for measuring the oxygen, carbon dioxide, and carbon monoxide content of exhaust gas in ANSI/ASME, PTC 19.10–1981, ''Flue and Exhaust Gas Analyses [Part 10, Instruments and Apparatus]'' (incorporated by reference, *see* § 63.14).

(4) Use Method 4 in appendix A of part 60 to determine stack gas moisture.

(5) Methods for determining gas volumetric flow rate, dry molecular weight, and stack gas moisture must be performed, as applicable, during each test run.

(b) Measure the volatile organic matter concentration as carbon at the inlet and outlet of the add-on control device simultaneously, using Method 25 or 25A in appendix A–7 of part 60. If you are demonstrating compliance with the oxidizer outlet organic HAP concentration limit, only the outlet volatile organic matter concentration must be determined. The outlet volatile organic matter concentration is determined as the average of the three test runs. You may use Method 18 in appendix A–6 of part 60 to subtract methane emissions from measured volatile organic matter concentration as carbon.

(1) Use Method 25 if the add-on control device is an oxidizer and you expect the total gaseous organic concentration as carbon to be more than 50 parts per million (ppm) at the control device outlet.

(2) Use Method 25A if the add-on control device is an oxidizer and you expect the total gaseous organic concentration as carbon to be 50 ppm or less at the control device outlet. Method 25A must be used to demonstrate compliance with the oxidizer outlet organic HAP concentration limit.

(3) Use Method 25A if the add-on control device is not an oxidizer.

(c) If two or more add-on control devices are used for the same emission stream, then you must measure emissions at the outlet to the atmosphere of each device. For example, if one add-on control device is a concentrator with an outlet to the atmosphere for the high-volume, dilute stream that has been treated by the concentrator, and a second add-on control device is an oxidizer with an outlet to the atmosphere for the low-volume, concentrated stream that is treated with the oxidizer, you must measure emissions at the outlet of the oxidizer and the high volume dilute stream outlet of the concentrator.

(d) For each test run, determine the total gaseous organic emissions mass flow rates for the inlet and the outlet of the add-on control device, using Equation 1 of this section. If there is more than one inlet or outlet to the add-on control device, you must calculate the total gaseous organic mass flow rate using Equation 1 of this section for each inlet and each outlet and

sfrattini on LAPJZKW1R2 with $$_JOB
VerDate Sep<11>2014 09:16 Apr 04, 2023 Jkt 256165 PO 00000 Frm 00907 Fmt 8010 Sfmt 8010 Q:\40\256165.XXX PC31

then total all of the inlet emissions and total all of the outlet emissions:

$$M_f = Q_{sd} C_c [12] [0.0416] [10^{-6}] \qquad \text{(Eq. 1)}$$

Where:

M_f = Total gaseous organic emissions mass flow rate, kg/hour (h).

C_c = Concentration of organic compounds as carbon in the vent gas, as determined by Method 25 or Method 25A, ppmv, dry basis.

Q_{sd} = Volumetric flow rate of gases entering or exiting the add-on control device, as determined by Method 2, 2A, 2C, 2D, 2F, or 2G, dry standard cubic meters/hour (dscm/h).

0.0416 = Conversion factor for molar volume, kg-moles per cubic meter (mole/m^3) (@ 293 Kelvin (K) and 760 millimeters of mercury (mmHg)).

(e) For each test run, determine the add-on control device organic emissions destruction or removal efficiency using Equation 2 of this section.

$$DRE = \frac{M_{fi} - M_{fo}}{M_{fi}} \qquad \text{(Eq. 2)}$$

Where:

DRE = Organic emissions destruction or removal efficiency of the add-on control device, percent.

M_{fi} = Total gaseous organic emissions mass flow rate at the inlet(s) to the add-on control device, using Equation 1 of this section, kg/h.

M_{fo} = Total gaseous organic emissions mass flow rate at the outlet(s) of the add-on control device, using Equation 1 of this section, kg/h.

(f) Determine the emission destruction or removal efficiency of the add-on control device as the average of the efficiencies determined in the three test runs and calculated in Equation 2 of this section.

[68 FR 32189, May 29, 2003, as amended at 84 FR 9630, Mar. 15, 2019]

§ 63.4363 How do I establish the add-on control device operating limits during the performance test?

During the performance test required by § 63.4340 or § 63.4350 and described in §§ 63.4360, 63.4361, and 63.4362, you must establish the operating limits required by § 63.4292 according to this section, unless you have received approval for alternative monitoring and operating limits under § 63.8(f) as specified in § 63.4292.

(a) *Thermal oxidizers.* If your add-on control device is a thermal oxidizer, establish the operating limits according to paragraphs (a)(1) and (2) of this section.

(1) During the performance test, you must monitor and record the temperature at least once every 15 minutes during each of the three test runs. You must monitor the temperature in the firebox of the thermal oxidizer or immediately downstream of the firebox before any substantial heat exchange occurs.

(2) Use the data collected during the performance test to calculate and record the average temperature maintained during the performance test. This average temperature is the minimum operating limit for your thermal oxidizer.

(b) *Catalytic oxidizers.* If your add-on control device is a catalytic oxidizer, establish the operating limits according to either paragraphs (b)(1) and (2) or paragraphs (b)(3) and (4) of this section.

(1) During the performance test, you must monitor and record the temperature at the inlet to the catalyst bed and the temperature difference across the catalyst bed at least once every 15 minutes during each of the three test runs.

(2) Use the data collected during the performance test to calculate and record the average temperature at the inlet to the catalyst bed and the average temperature difference across the catalyst bed maintained during the performance test. These are the minimum operating limits for your catalytic oxidizer.

(3) As an alternative to monitoring the temperature difference across the

sfrattini on LAPJZKW1R2 with $$_JOB
VerDate Sep<11>2014 09:16 Apr 04, 2023 Jkt 256165 PO 00000 Frm 00908 Fmt 8010 Sfmt 8010 Q:\40\256165.XXX PC31
ER29MY03.031<MATH> ER29MY03.032<MATH>

catalyst bed, you may monitor the temperature at the inlet to the catalyst bed and implement a site-specific inspection and maintenance plan for your catalytic oxidizer as specified in paragraph (b)(4) of this section. During the performance test, you must monitor and record the temperature just before the catalyst bed at least once every 15 minutes during each of the three test runs. Use the data collected during the performance test to calculate and record the average temperature just before the catalyst bed during the performance test. This is the minimum operating limit for your catalytic oxidizer.

(4) You must develop and implement an inspection and maintenance plan for your catalytic oxidizer(s) for which you elect to monitor according to paragraph (b)(3) of this section. The plan must address, at a minimum, the elements specified in paragraphs (b)(4)(i) through (iii) of this section.

(i) Annual sampling and analysis of the catalyst activity (*i.e.*, conversion efficiency) following the manufacturer's or catalyst supplier's recommended procedures.

(ii) Monthly inspection of the oxidizer system, including the burner assembly and fuel supply lines for problems and, as necessary, adjust the equipment to assure proper air-to-fuel mixtures.

(iii) Annual internal and monthly external visual inspection of the catalyst bed to check for channeling, abrasion, and settling. If problems are found, you must take corrective action consistent with the manufacturer's recommendations and conduct a new performance test to determine destruction efficiency according to § 63.4362.

§ 63.4364 What are the requirements for CPMS installation, operation, and maintenance?

(a) *General.* If you are using a control device to comply with the emission standards in § 63.4290, you must install, operate, and maintain each CPMS specified in paragraphs (c) and (d) and (e) of this section according to the requirements in paragraphs (a)(1) through (8) of this section. You must install, operate, and maintain each CPMS specified in paragraph (b) of this section according to paragraphs (a)(5) through (7) of this section.

(1) Each CPMS must complete a minimum of one cycle of operation for each successive 15-minute period. You must have a minimum of four equally spaced successive cycles of CPMS operation to have a valid hour of data.

(2) You must have valid data from at least 90 percent of the hours during which the process operated.

(3) You must determine the hourly average of all recorded readings according to paragraphs (a)(3)(i) and (ii) of this section.

(i) To calculate a valid hourly value, you must have at least three of four equally spaced data values from that hour from a continuous monitoring system (CMS) that is not out-of-control.

(ii) Provided all of the readings recorded in accordance with paragraph (a)(3) of this section clearly demonstrate continuous compliance with the standard that applies to you, then you are not required to determine the hourly average of all recorded readings.

(4) You must determine the rolling 3-hour average of all recorded readings for each operating period. To calculate the average for each 3-hour averaging period, you must have at least two of three of the hourly averages for that period using only average values that are based on valid data (*i.e.*, not from out-of-control periods).

(5) You must record the results of each inspection, calibration, and validation check of the CPMS.

(6) At all times, you must maintain the monitoring system in accordance with § 63.4300(b) and in proper working order including, but not limited to, keeping readily available necessary parts for routine repairs of the monitoring equipment.

(7) Before September 12, 2019, except for monitoring malfunctions, associated repairs, or required quality assurance or control activities (including calibration checks or required zero and span adjustments), you must conduct all monitoring at all times that the unit is operating. On and after September 12, 2019, you must operate the CPMS and collect emission capture

sfrattini on LAPJZKW1R2 with $$_JOB
VerDate Sep<11>2014 09:16 Apr 04, 2023 Jkt 256165 PO 00000 Frm 00909 Fmt 8010 Sfmt 8010 Q:\40\256165.XXX PC31

system and add-on control device parameter data at all times in accordance with § 63.4300(b). Data recorded during monitoring malfunctions, associated repairs, out-of-control periods, or required quality assurance or control activities shall not be used for purposes of calculating the emissions concentrations and percent reductions specified in Table 1 to this subpart. You must use all the data collected during all other periods in assessing compliance of the control device and associated control system. A monitoring malfunction is any sudden, infrequent, not reasonably preventable failure of the monitoring system to provide valid data. Monitoring failures that are caused in part by poor maintenance or careless operation are not malfunctions.

(8) Except for periods of required quality assurance or control activities, any averaging period during which the CPMS fails to operate and record data continuously as required by paragraph (a)(1) of this section, or during which generated data cannot be included in calculating averages as specified in paragraph (a)(7) of this section, constitutes a deviation, and you must notify the Administrator in accordance with § 63.4311(a).

(b) *Capture system bypass line.* You must meet the requirements of paragraphs (a)(5) through (6) and (b)(1) and (2) of this section for each emission capture system that contains bypass lines that could divert emissions away from the add-on control device to the atmosphere.

(1) You must monitor or secure the valve or closure mechanism controlling the bypass line in a nondiverting position in such a way that the valve or closure mechanism cannot be opened without creating a record that the valve was opened. The method used to monitor or secure the valve or closure mechanism must meet one of the requirements specified in paragraphs (b)(1)(i) through (iv) of this section.

(i) *Flow control position indicator.* Install, calibrate, maintain, and operate according to the manufacturer's specifications a flow control position indicator that takes a reading at least once every 15 minutes and provides a record indicating whether the emissions are directed to the add-on control device or diverted from the add-on control device. The time of occurrence and flow control position must be recorded, as well as every time the flow direction is changed. The flow control position indicator must be installed at the entrance to any bypass line that could divert the emissions away from the add-on control device to the atmosphere.

(ii) *Car-seal or lock-and-key valve closures.* Secure any bypass line valve in the closed position with a car-seal or a lock-and-key type configuration. You must visually inspect the seal or closure mechanism at least once every month to ensure that the valve is maintained in the closed position, and the emissions are not diverted away from the add-on control device to the atmosphere.

(iii) *Valve closure continuous monitoring.* Ensure that any bypass line valve is in the closed (non-diverting) position through monitoring of valve position at least once every 15 minutes. You must inspect the monitoring system at least once every month to verify that the monitor will indicate valve position.

(iv) *Automatic shutdown system.* Use an automatic shutdown system in which the web coating/printing or dyeing/finishing operation is stopped when flow is diverted by the bypass line away from the add-on control device to the atmosphere when the web coating/printing or dyeing/finishing operation is running. You must inspect the automatic shutdown system at least once every month to verify that it will detect diversions of flow and shutdown the web coating/printing or dyeing/finishing operation.

(2) If any bypass line is opened, you must include a description of why the bypass line was opened and the length of time it remained open in the semiannual compliance reports required in § 63.4311.

(c) *Oxidizers.* If you are using an oxidizer to comply with the emission standards, you must comply with paragraphs (c)(1) through (3) of this section.

(1) Install, calibrate, maintain, and operate temperature monitoring equipment according to the manufacturer's specifications. The calibration of the

sfrattini on LAPJZKW1R2 with $$_JOB
VerDate Sep<11>2014 09:16 Apr 04, 2023 Jkt 256165 PO 00000 Frm 00910 Fmt 8010 Sfmt 8010 Q:\40\256165.XXX PC31

chart recorder, data logger, or temperature indicator must be verified every 3 months or the chart recorder, data logger, or temperature indicator must be replaced. A thermocouple is considered part of the temperature indicator for purposes of performing periodic calibration and verification checks.

(2) For an oxidizer other than a catalytic oxidizer, install, calibrate, operate, and maintain a temperature monitoring device equipped with a continuous recorder. The device must have an accuracy of ±1 percent of the temperature being monitored in degrees Celsius, or ±1 °Celsius, whichever is greater. The thermocouple or temperature sensor must be installed in the combustion chamber at a location in the combustion zone.

(3) For a catalytic oxidizer, install, calibrate, operate, and maintain a temperature monitoring device equipped with a continuous recorder. The device must be capable of monitoring temperature with an accuracy of ±1 percent of the temperature being monitored in degrees Celsius or ±1 degree Celsius, whichever is greater. The thermocouple or temperature sensor must be installed in the vent stream at the nearest feasible point to the inlet and outlet of the catalyst bed. Calculate the temperature rise across the catalyst.

(d) *Other types of control devices.* If you use a control device other than an oxidizer or wish to monitor an alternative parameter and comply with a different operating limit, you must apply to the Administrator for approval of an alternative monitoring method under § 63.8(f).

(e) *Capture system monitoring.* If you are complying with the emission standards in § 63.4290 through the use of a capture system and control device, you must develop a site-specific monitoring plan containing the information specified in paragraphs (e)(1) and (2) of this section for these capture systems. You must monitor the capture system in accordance with paragraph (e)(3) of this section. You must make the monitoring plan available for inspection by the permitting authority upon request.

(1) The monitoring plan must:

(i) Identify the operating parameter to be monitored to ensure that the capture efficiency determined during the initial compliance test is maintained; and

(ii) Explain why this parameter is appropriate for demonstrating ongoing compliance; and

(iii) Identify the specific monitoring procedures.

(2) The monitoring plan must specify the operating parameter value or range of values that demonstrate compliance with the emission standards in § 63.4290. The specified operating parameter value or range of values must represent the conditions present when the capture system is being properly operated and maintained.

(3) You must conduct all capture system monitoring in accordance with the plan.

(4) Any deviation from the operating parameter value or range of values which are monitored according to the plan will be considered a deviation from the operating limit.

(5) You must review and update the capture system monitoring plan at least annually.

[68 FR 32189, May 29, 2003, as amended at 84 FR 9630, Mar. 15, 2019]

OTHER REQUIREMENTS AND INFORMATION

§ 63.4370 Who implements and enforces this subpart?

(a) This subpart can be implemented and enforced by us, the U.S. EPA, or a delegated authority such as your State, local, or tribal agency. If the Administrator has delegated authority to your State, local, or tribal agency, then that agency (as well as the U.S. EPA), has the authority to implement and enforce this subpart. You should contact your EPA Regional Office to find out if implementation and enforcement of this subpart is delegated to your State, local, or tribal agency.

(b) In delegating implementation and enforcement authority of this subpart to a State, local, or tribal agency under subpart E of this part, the authorities contained in paragraph (c) of this section are retained by the Administrator and are not transferred to the State, local, or tribal agency.

sfrattini on LAPJZKW1R2 with $$_JOB
VerDate Sep<11>2014 09:16 Apr 04, 2023 Jkt 256165 PO 00000 Frm 00911 Fmt 8010 Sfmt 8010 Q:\40\256165.XXX PC31

(c) The authorities that will not be delegated to State, local, or tribal agencies are listed in paragraphs (c)(1) through (4) of this section:

(1) Approval of alternatives to the work practice standards in § 63.4293 under § 63.6(g).

(2) Approval of major alternatives to test methods under § 63.7(e)(2)(ii) and (f) and as defined in § 63.90.

(3) Approval of major alternatives to monitoring under § 63.8(f) and as defined in § 63.90.

(4) Approval of major alternatives to recordkeeping and reporting under § 63.10(f) and as defined in § 63.90.

§ 63.4371 What definitions apply to this subpart?

Terms used in this subpart are defined in the CAA, in 40 CFR 63.2, and in this section as follows:

Add-on control means an air pollution control device, such as a thermal oxidizer or carbon adsorber, that reduces pollution in an air stream by destruction or removal before discharge to the atmosphere.

As-applied means the condition of a coating at the time of application to a substrate, including any added solvent.

As purchased means the condition of a coating, printing, slashing, dyeing, or finishing material as delivered to the affected source, before alteration.

Capture device means a hood, enclosure, room, floor sweep, or other means of containing or collecting emissions and directing those emissions into an add-on air pollution control device.

Capture efficiency means the portion (expressed as a percentage) of the pollutants from an emission source that is delivered to an add-on control device.

Capture system means one or more capture devices intended to collect emissions generated by a web coating/printing or dyeing/finishing operation in the use of regulated materials, both at the point of application and at subsequent points where emissions from the regulated materials occur, such as flashoff, drying, or curing. As used in this subpart, multiple capture devices that collect emissions generated by a web coating/printing or dyeing/finishing operation are considered a single capture system.

Cleaning material means a solvent used to remove contaminants and other materials, such as dirt, grease, or oil, from a textile before a web coating/printing operation (surface preparation) or from equipment associated with the web coating/ printing operation, such as tanks, rollers, rotary screens, and knife or wiper blades. Thus, it includes any cleaning material used in the web coating and printing subcategory for surface preparation of substrates or process operation equipment cleaning or both with the exception of cleaning material applied to the substrate using handheld, non-refillable aerosol containers.

Coating means the application of a semi-liquid coating material to one or both sides of a textile web substrate. Once the coating material is dried (and cured, if necessary), it bonds with the textile to form a continuous solid film for decorative, protective, or functional purposes. Coating does not include finishing where the fiber is impregnated with a chemical or resin to impart certain properties, but a solid film is not formed.

Coating material means an elastomer, polymer, or prepolymer material applied as a thin layer to a textile web. Such materials include, but are not limited to, coatings, sealants, inks, and adhesives. Decorative, protective, or functional materials that consist only of acids, bases, or any combination of these substances are not considered coating material for the purposes of this subpart. Thinning materials also are not included in this definition of coating materials, but are accounted for separately.

Coating operation means equipment used to apply cleaning materials to a web substrate to prepare it for coating material application (surface preparation), to apply coating material to a web substrate (coating application) and to dry or cure the coating material after application by exposure to heat or radiation (coating drying or curing), or to clean coating operation equipment (equipment cleaning). A single coating operation may include any combination of these types of equipment, but always includes at least the point at which a coating or cleaning material is applied and all subsequent

sfrattini on LAPJZKW1R2 with $$_JOB
VerDate Sep<11>2014 09:16 Apr 04, 2023 Jkt 256165 PO 00000 Frm 00912 Fmt 8010 Sfmt 8010 Q:\40\256165.XXX PC31

points in the affected source where organic HAP emissions from that coating or cleaning material occur. There may be multiple coating operations in an affected source. Coating material application with handheld, non-refillable aerosol containers, touch-up markers, or marking pens is not a coating operation for the purposes of this subpart. Polyurethane foam carpet backing operations are not coating operations for the purposes of this subpart.

Container means any portable device in which a material is stored, conveyed, treated, disposed of, or otherwise handled.

Continuous parameter monitoring system means the total equipment that may be required to meet the data acquisition and availability requirements of this subpart, used to sample, condition (if applicable), analyze, and provide a record of coating or printing operation, or capture system, or add-on control device parameters.

Controlled web coating/printing or dyeing/finishing operation means a web coating/printing or dyeing/finishing operation from which some or all of the organic HAP emissions are routed through an emission capture system and add-on control device.

Deviation means:

(1) Before September 12, 2019, any instance in which an affected source subject to this subpart or an owner or operator of such a source:

(i) Fails to meet any requirement or obligation established by this subpart including but not limited to any emission limit, or operating limit, or work practice standard;

(ii) Fails to meet any term or condition that is adopted to implement an applicable requirement in this subpart and that is included in the operating permit for any affected source required to obtain such a permit; or

(iii) Fails to meet any emission limit, or operating limit, or work practice standard in this subpart during startup, shutdown, or malfunction regardless of whether or not such failure is permitted by this subpart; and

(2) On and after September 12, 2019, any instance in which an affected source subject to this subpart or an owner or operator of such a source:

(i) Fails to meet any requirement or obligation established by this subpart including but not limited to any emission limit, or operating limit, or work practice standard; or

(ii) Fails to meet any term or condition that is adopted to implement an applicable requirement in this subpart and that is included in the operating permit for any affected source required to obtain such a permit.

Dyeing means the process of applying color to the whole body of a textile substrate with either natural or synthetic dyes. Dyes are applied to yarn, fiber, cord, or fabric in aqueous solutions and dried before or after finishing, depending on the process. Continuous dyeing processes include, but are not limited to thermosol, pad/steam, pad/dry, and rope range dyeing. Batch dyeing processes include, but are not limited to, jet, beck, stock, yarn, kier, beam, pad, package and skein dyeing.

Dyeing materials means the purchased dyes and dyeing auxiliaries that are used in the dyeing process. The dyes are the substances that add color to textiles through incorporation into the fiber by chemical reaction, absorption or dispersion. Dyeing auxiliaries are various substances that can be added to the dyebath to aid dyeing. Dyeing auxiliaries may be necessary to transfer the dye from the dyebath to the fiber or they may provide improvements in the dyeing process or characteristics of the dyed fiber.

Dyeing operation means the collection of equipment used to dye a textile substrate and includes equipment used for dye application, dye fixation, and textile substrate rinsing and drying. A single dyeing operation may include any combination of these types of equipment, but always includes at least the point at which a dyeing material is applied and all subsequent points in the affected source where organic HAP emissions from that dyeing material occur. There may be multiple dyeing operations in an affected source. Dyeing material application with handheld, non-refillable aerosol containers, touch-up markers, brushes, or marking pens is not a dyeing operation for the purposes of this subpart.

sfrattini on LAPJZKW1R2 with $$_JOB
VerDate Sep<11>2014 09:16 Apr 04, 2023 Jkt 256165 PO 00000 Frm 00913 Fmt 8010 Sfmt 8010 Q:\40\256165.XXX PC31

Emission limitation means an emission limit, operating limit, or work practice standard.

Enclosure means a structure that surrounds a source of emissions and captures and directs the emissions to an add-on control device.

Fabric means any woven, knitted, plaited, braided, felted, or non-woven material made of filaments, fibers, or yarns including thread. This term includes material made of fiberglass, natural fibers, synthetic fibers, or composite.

Finishing means the chemical treatment of a textile (*e.g.*, with resins, softeners, stain resist or soil release agents, water repellants, flame retardants, antistatic agents, or hand builders) that improves the appearance and/or usefulness of the textile substrate.

Finishing materials means the purchased substances (including auxiliaries added to the finish to improve the finishing process or the characteristics of the finished textile) that are applied individually or as mixtures to textile substrates to impart desired properties.

Finishing operations means the collection of equipment used to finish a textile substrate including chemical finish applicator(s), flashoff area(s) and drying or curing oven(s).

Laminated fabric means fabric composed of a high-strength reinforcing base fabric between two plies of flexible thermoplastic film. Two or more fabrics or textiles or a fabric and a paper substrate may be bonded with an adhesive to form a laminate. The bonding of a fabric substrate to paper is not subject to the requirements of this subpart.

Manufacturer's formulation data means data on a material (such as a coating, printing, slashing, dyeing and finishing) that are supplied by the material manufacturer based on knowledge of the ingredients used to manufacture that material, rather than based on testing of the material. Manufacturer's formulation data may include, but are not limited to, information on density, organic HAP content, and coating, printing, dyeing, slashing, finishing, thinning, or cleaning material content.

Mass fraction of organic HAP means the ratio of the mass of organic HAP to the mass of a material in which it is contained; kg of organic HAP per kg of material.

Month means a calendar month or a pre-specified period of 28 days to 35 days to allow for flexibility in recordkeeping when data are based on a business accounting period.

No organic HAP means no organic HAP in table 5 to this subpart is present at 0.1 percent by mass or more and no organic HAP not listed in table 5 to this subpart is present at 1.0 percent by mass or more. The organic HAP content of a regulated material is determined according to § 63.4321(e)(1).

Operating scenario means for a dyeing/finishing process operation or group of process operations, the combination of operating conditions (including but not limited to, type of substrate, type and mass fraction of organic HAP in dyeing/finishing materials applied, and the process operation temperature and pressure) affecting the fraction of organic HAP applied in dyeing and finishing operations discharged to wastewater. For example, a dyeing process operation run at atmospheric pressure would be a different operating scenario from the same dyeing process operation run under pressure.

Organic HAP content means the mass of organic HAP per mass of solids for a coating or printing material calculated using Equation 1 of § 63.4321. The organic HAP content is determined for the coating or printing material as purchased.

Organic HAP overall control efficiency means the total efficiency of a control system, determined either by:

(1) The product of the capture efficiency as determined in accordance with the requirements of § 63.4361 and the control device organic emissions destruction or removal efficiency determined in accordance with the requirements of § 63.4362; or

(2) A liquid-liquid material balance in accordance with the requirements of § 63.4341(e)(5) or (f)(5) or § 63.4351(d)(5).

Permanent total enclosure (PTE) means a permanently installed enclosure that meets the criteria of Method 204 of appendix M, 40 CFR part 51, for a PTE and that directs all the exhaust gases

sfrattini on LAPJZKW1R2 with $$_JOB
VerDate Sep<11>2014 09:16 Apr 04, 2023 Jkt 256165 PO 00000 Frm 00914 Fmt 8010 Sfmt 8010 Q:\40\256165.XXX PC31

from the enclosure to an add-on control device.

Point of determination means each point where process wastewater exits the dyeing/finishing process unit.

Printing means the application of color and patterns to textiles, usually in the form of a paste, using a variety of techniques including, but not limited to roller, rotary screen, and ink jet printing. After application of the printing material, the textile usually is treated with steam, heat, or chemicals to fix the color.

Printing material means the purchased substances, usually including gums or thickeners, dyes and appropriate chemicals such as defoamers and resins that are mixed to produce the print pastes applied to textile substrates as patterns and colors.

Printing operation means equipment used to apply cleaning materials to a web substrate to prepare it for printing material application (surface preparation), to apply printing material to one or both sides of a web substrate (printing application) and to dry or cure the printing material after application by exposure to heat or radiation (printing material drying or curing), or to clean printing operation equipment (equipment cleaning). A single printing operation may include any combination of these types of equipment, but always includes at least the point at which a printing or cleaning material is applied and all subsequent points in the affected source where organic HAP emissions from that printing or cleaning material occur. There may be multiple printing operations in an affected source.

Publically owned treatment works or *POTW* means any device or system used in the treatment (including recycling and reclamation) of municipal sewage or industrial wastes of a liquid nature which is owned by a ''State'' or ''municipality'' (as defined by section 502(4) of the CWA). This definition includes sewers, pipes or other conveyances only if they convey wastewater to a POTW providing treatment.

Regulated materials means the organic-containing materials that are used in the three printing, coating, and dyeing subcategories defined in §63.4281(a). Organic-HAP containing regulated materials are the source of the organic HAP emissions limited by the requirements of this subpart. The specific regulated materials for each subcategory are defined in §63.4282.

Research or laboratory operation means an operation whose primary purpose is for research and development of new processes and products that is conducted under the close supervision of technically trained personnel and is not engaged in the manufacture of final or intermediate products for commercial purposes, except in a *de minimis* manner.

Responsible official means responsible official as defined in 40 CFR 70.2.

Slashing means the application of a chemical sizing solution to warp yarns prior to weaving to protect against snagging or abrasion that could occur during weaving.

Slashing materials, also known as sizing, means the purchased compounds that are applied to warp yarns prior to weaving. Starch, gelatin, oil, wax, and manufactured polymers such as polyvinyl alcohol, polystyrene, polyacrylic acid and polyacetates are used as sizing compounds.

Slashing operation means the equipment used to mix and prepare size for application and the slasher, which is the equipment used to apply and dry size on warp yarn.

Solids means the nonvolatile portion of the coating and printing materials that makes up the dry film on a coated substrate and the pattern or color on a printed substrate.

Startup, initial means the first time equipment is brought online in a facility.

Surface preparation means chemical treatment of part or all of a substrate to prepare it for coating or printing material application.

Temporary total enclosure means an enclosure constructed for the purpose of measuring the capture efficiency of pollutants emitted from a given source as defined in Method 204 of appendix M, 40 CFR part 51.

Textile means any one of the following:

(1) Staple fibers and filaments suitable for conversion to or use as yarns, or for the preparation of woven, knit, or nonwoven fabrics;

sfrattini on LAPJZKW1R2 with $$_JOB
VerDate Sep<11>2014 09:16 Apr 04, 2023 Jkt 256165 PO 00000 Frm 00915 Fmt 8010 Sfmt 8010 Q:\40\256165.XXX PC31

(2) Yarns made from natural or manufactured fibers;

(3) Fabrics and other manufactured products made from staple fibers and filaments and from yarn; and

(4) Garments and other articles fabricated from fibers, yarns, or fabrics.

Thinning material means an organic solvent that is added to a coating or printing material after the coating or printing material is received from the supplier.

Total volatile hydrocarbon (TVH) means the total amount of nonaqueous volatile organic material determined according to Methods 204A through 204C of appendix M to 40 CFR part 51 and substituting the term TVH each place in the methods where the term VOC is used. The TVH includes both VOC and non-VOC.

Uncontrolled web coating/printing or dyeing/finishing operation means acoating/printing or dyeing/finishing operation from which none of the organic HAP emissions are routed through an emission capture system and add-on control device.

Volatile organic compounds (VOC) means any compounds defined as VOC in 40 CFR 51.100(s).

Wastewater means water that is generated in a web coating, web printing, slashing, dyeing or finishing operation and is collected, stored, or treated prior to being discarded or discharged.

Web means a continuous textile substrate which is flexible enough to be wound or unwound as rolls.

[68 FR 32189, May 29, 2003, as amended at 84 FR 9630, Mar. 15, 2019; 85 FR 41150, July 8, 2020]

TABLE 1 TO SUBPART OOOO OF PART 63—EMISSION LIMITS FOR NEW OR RECONSTRUCTED AND EXISTING AFFECTED SOURCES IN THE PRINTING, COATING AND DYEING OF FABRICS AND OTHER TEXTILES SOURCE CATEGORY

If you are required to comply with emission limitations in accordance with §§ 63.4290 and 63.4291, you must comply with the applicable emission limits in the following table:

If your affected source is a . . .	And it conducts . . .	Then this is the organic HAP emission limit for each compliance period . . .
1. New or reconstructed coating and printing affected source.	Coating operations only, *or* Printing operations only, *or* Both coating and printing operations.	You may choose any one of the following limits: Reduce organic HAP emissions to the atmosphere by achieving at least a 98 percent organic HAP overall control efficiency; Limit organic HAP emissions to the atmosphere to no more than 0.08 kg of organic HAP per kg of solids applied; or If you use an oxidizer to control organic HAP emissions, operate the oxidizer such that an outlet organic HAP concentration of no greater than 20 ppmv on a dry basis is achieved and the efficiency of the capture system is 100 percent.
2. Existing coating and printing affected source.	Coating operations only, *or* Printing operations only, *or* Both coating and printing operations.	You may choose any one of the following limits: Reduce organic HAP emissions to the atmosphere by achieving at least a 97 percent organic HAP overall control efficiency; Limit organic HAP emissions to the atmosphere to no more than 0.12 kg of organic HAP per kg of solids applied; or If you use an oxidizer to control organic HAP emissions, operate the oxidizer such that an outlet organic HAP concentration of no greater than 20 ppmv on a dry basis is achieved and the efficiency of the capture system is 100 percent.

sfrattini on LAPJZKW1R2 with $$_JOB
VerDate Sep<11>2014 09:16 Apr 04, 2023 Jkt 256165 PO 00000 Frm 00916 Fmt 8010 Sfmt 8002 Q:\40\256165.XXX PC31

If your affected source is a . . .	And it conducts . . .	Then this is the organic HAP emission limit for each compliance period . . .
3. New, reconstructed or existing dyeing finishing affected source.	a. Dyeing operations only	You must limit organic HAP emissions to the atmosphere to no more than 0.016 kg of organic HAP per kg of dyeing materials applied.
	b. Finishing operations only	You must limit organic HAP emissions to the atmosphere to no more than 0.0003 kg of organic HAP per kg of finishing materials applied.
	c. Both dyeing and finishing operations	You must limit organic HAP emissions to the atmosphere to no more than 0.016 kg of organic HAP per kg of dyeing and finishing materials applied.
4. New, reconstructed or existing slashing affected source.	Slashing operations only	You must limit organic HAP emissions to the atmosphere to no more than zero kg organic HAP per kg of slashing materials as determined according to § 63.4321(e)(1)(iv) of this subpart.

TABLE 2 TO SUBPART OOOO OF PART 63—OPERATING LIMITS IF USING ADD-ON CONTROL DEVICES AND CAPTURE SYSTEM

If you are required to comply with the operating limits by § 63.4292, you must comply with the applicable operating limits in the following table:

For the following device . . .	You must meet the following operating limit . . .	And you must demonstrate continuous compliance with the operating limit by . . .
1. Thermal oxidizer	a. The average temperature in any 3-hour block period must not fall below the temperature limit established according to § 63.4363(a)	i. Collecting the temperature data according to § 63.4364(c); ii. Reducing the data to 3-hour block averages; and iii. Maintaining the 3-hour block average temperature at or above the temperature limit.
2. Catalytic oxidizer	a. The average temperature measured at the inlet to the catalyst bed in any 3-hour block period must not fall below the limit established according to § 63.4363(b); and either	i. Collecting the temperature data according to § 63.4364(c); ii. reducing the data to 3-hour block averages; and iii. maintaining the 3-hour block average catalyst bed inlet temparature at or above temperature limit.
	b. Ensure that the average temperature difference across the catalyst bed in any 3-hour block period does not fall below the temperature difference limit established according to § 63.4363(b)(2); or	Collecting the temperature data according to § 63.4364(c), reducing the data to 3-hour block averages, and maintaining the 3-hour block average temperature difference at or above the temperature difference limit.
	c. Develop and implement an inspection and maintenance plan according to § 63.4363(b)(4).	Maintaining an up-to-date inspection and maintenance plan, records of annual catalyst activity checks, records of monthly inspections of the oxidizer system, and records of the annual internal inspections of the catalyst bed. If a problem is discovered during a monthly or annual inspection required by § 63.4363(b)(4), you must take corrective action as soon as practicable consistent with the manufacturer's recommendations.
3. Emission capture system	Submit monitoring plan to the Administrator that identifies operating parameters to be monitored according to § 63.4364(e).	Conduct monitoring according to the plan (§ 63.4364(e)(3)).

sfrattini on LAPJZKW1R2 with $$_JOB
VerDate Sep<11>2014 09:16 Apr 04, 2023 Jkt 256165 PO 00000 Frm 00917 Fmt 8010 Sfmt 8026 Q:\40\256165.XXX PC31

TABLE 3 TO SUBPART OOOO OF PART 63—APPLICABILITY OF GENERAL PROVISIONS TO SUBPART OOOO

[You must comply with the applicable General Provisions requirements according to the following table:]

Citation	Subject	Applicable to subpart OOOO	Explanation
§ 63.1(a)(1)–(12)	General Applicability	Yes.	
§ 63.1(b)(1)–(3)	Initial Applicability Determination	Yes	Applicability to subpart OOOO is also specified in § 63.4281.
§ 63.1(c)(1)	Applicability After Standard Established.	Yes.	
§ 63.1(c)(2)–(3)	Applicability of Permit Program for Area Sources.	No	Area sources are not subject to subpart OOOO.
§ 63.1(c)(4)–(5)	Extensions and Notifications	Yes.	
§ 63.1(c)(6)	Reclassification	Yes.	
§ 63.1(e)	Applicability of Permit Program Before Relevant Standard is Set.	Yes.	
§ 63.2	Definitions	Yes	Additional definitions are specified in § 63.4371.
§ 63.3(a)–(c)	Units and Abbreviations	Yes.	
§ 63.4(a)(1)–(5)	Prohibited Activities	Yes.	
§ 63.4(b)–(c)	Circumvention/Severability	Yes.	
§ 63.5(a)	Construction/Reconstruction	Yes.	
§ 63.5(b)(1)–(6)	Requirements for Existing, Newly Constructed, and Reconstructed Sources.	Yes.	
§ 63.5(d)	Application for Approval of Construction/Reconstruction.	Yes.	
§ 63.5(e)	Approval of Construction/Reconstruction.	Yes.	
§ 63.5(f)	Approval of Construction/Reconstruction Based on Prior State Review.	Yes.	
§ 63.6(a)	Compliance With Standards and Maintenance Requirements—Applicability.	Yes.	
§ 63.6(b)(1)–(7)	Compliance Dates for New and Reconstructed Sources.	Yes	Section 63.4283 specifies the compliance dates.
§ 63.6(c)(1)–(5)	Compliance Dates for Existing Sources.	Yes	Section 63.4283 specifies the compliance dates.
§ 63.6(e)(1)(i)	Operation and Maintenance	Yes, before September 12, 2019.. No, on and after September 12, 2019.	*See* § 63.4300(b) for general duty requirement.
§ 63.6(e)(1)(ii)	Operation and Maintenance	Yes, before September 12, 2019.. No, on and after September 12, 2019.	
§ 63.6(e)(1)(iii)	Operation and Maintenance	Yes.	
§ 63.6(e)(3)	Startup, Shutdown, and Malfunction Plan.	Yes, before September 12, 2019.. No, on and after September 12, 2019.	
§ 63.6(f)(1)	Compliance Except During Startup, Shutdown, and Malfunction.	Yes, before September 12, 2019.. No, on and after September 12, 2019.	
§ 63.6(f)(2)–(3)	Methods for Determining Compliance.	Yes.	
§ 63.6(g)(1)–(3)	Use of an Alternative Standard	Yes.	
§ 63.6(h)	Compliance With Opacity/Visible Emission Standards.	No	Subpart OOOO does not establish opacity standards and does not require continuous opacity monitoring systems (COMS).
§ 63.6(i)(1)–(16)	Extension of Compliance	Yes.	

sfrattini on LAPJZKW1R2 with $$_JOB
VerDate Sep<11>2014 09:16 Apr 04, 2023 Jkt 256165 PO 00000 Frm 00918 Fmt 8010 Sfmt 8002 Q:\40\256165.XXX PC31

[You must comply with the applicable General Provisions requirements according to the following table:]

Citation	Subject	Applicable to subpart OOOO	Explanation
§ 63.6(j)	Presidential Compliance Exemption	Yes.	
§ 63.7(a)(1)	Performance Test Requirements—Applicability.	Yes	Applies to all affected sources. Additional requirements for performance testing are specified in §§ 63.4360, 63.4361, and 63.4362.
§ 63.7(a)(2)	Performance Test Requirements—Dates.	Yes	Applies only to performance tests for capture system and control device efficiency at sources using these to comply with the standard.
§ 63.7(a)(3)	Performance Tests Required by the Administrator.	Yes.	
§ 63.7(b)–(d)	Performance Test Requirements—Notification, Quality Assurance, Facilities Necessary for Safe Testing, Conditions During Test.	Yes	Applies only to performance tests for capture system and control device efficiency at sources using these to comply with the standard.
§ 63.7(e)(1)	Conduct of performance tests	Yes, before September 12, 2019.. No, on and after September 12, 2019.	*See* § 63.4360.
§ 63.7(e)(2)–(4)	Conduct of performance tests	Yes.	
§ 63.7(f)	Performance Test Requirements—Use of Alternative Test Method.	Yes	Applies to all test methods except those used to determine capture system efficiency.
§ 63.7(g)–(h)	Performance Test Requirements—Data Analysis, Recordkeeping, Waiver of Test.	Yes	Applies only to performance tests for capture system and add-on control device efficiency at sources using these to comply with the standards.
§ 63.8(a)(1)–(3)	Monitoring Requirements—Applicability.	Yes	Applies only to monitoring of capture system and add-on control device efficiency at sources using these to comply with the standards. Additional requirements for monitoring are specified in § 63.4364.
§ 63.8(a)(4)	Additional Monitoring Requirements	No	Subpart OOOO does not have monitoring requirements for flares.
§ 63.8(b)	Conduct of Monitoring	Yes.	
§ 63.8(c)(1)	Continuous Monitoring Systems (CMS) Operation and Maintenance.	Yes, before September 12, 2019. No, on and after September 12, 2019.	Section 63.4364 specifies the requirements for the operation of CMS for capture systems and add-on control devices at sources using these to comply.
§ 63.8(c)(2)–(3)	CMS Operation and Maintenance	Yes	Applies only to monitoring of capture system and add-on control device efficiency at sources using these to comply with the standards. Additional requirements for CMS operations and maintenance are specified in § 63.4364.
§ 63.8(c)(4)	CMS	No	Section 63.4364 specifies the requirements for the operation of CMS for capture systems and add-on control devices at sources using these to comply.
§ 63.8(c)(5)	COMS	No	Subpart OOOO does not have opacity or visible emission standards.
§ 63.8(c)(6)	CMS Requirements	No	Section 63.4364 specifies the requirements for monitoring systems for capture systems and add-on control devices at sources using these to comply.
§ 63.8(c)(7)	CMS Out of Control Periods	Yes.	
§ 63.8(c)(8)	CMS Out of Control Periods and Reporting.	No	Section 63.4311 requires reporting of CMS out-of-control periods.
§ 63.8(d)–(e)	Quality Control Program and CMS Performance Evaluation.	No	Subpart OOOO does not require the use of CEMS.
§ 63.8(f)(1)–(5)	Use of an Alternative Monitoring Method.	Yes.	
§ 63.8(f)(6)	Alternative to Relative Accuracy Test.	No	Subpart OOOO does not require the use of CEMS.
§ 63.8(g)(1)–(5)	Data Reduction	No	Sections 63.4363 and 63.4364 specify monitoring data reduction.
§ 63.9(a)	Applicability and General Information.	Yes.	

sfrattini on LAPJZKW1R2 with $$_JOB
VerDate Sep<11>2014 09:16 Apr 04, 2023 Jkt 256165 PO 00000 Frm 00919 Fmt 8010 Sfmt 8002 Q:\40\256165.XXX PC31

[You must comply with the applicable General Provisions requirements according to the following table:]

Citation	Subject	Applicable to subpart OOOO	Explanation
§ 63.9(b)	Initial Notifications	No	Subpart OOOO provides 1 year for an existing source to submit an initial notification.
§ 63.9(c)	Request for Extension of Compliance.	Yes.	
§ 63.9(d)	Notification that Source is Subject to Special Compliance Requirements.	Yes.	
§ 63.9(e)	Notification of Performance Test	Yes	Applies only to capture system and add-on control device performance tests at sources using these to comply with the standards.
§ 63.9(f)	Notification of Visible Emissions/Opacity Test.	No	Subpart OOOO does not have opacity or visible emission standards.
§ 63.9(g)(1)–(3)	Additional Notifications When Using CMS.	No	Subpart OOOO does not require the use of CEMS.
§ 63.9(h)	Notification of Compliance Status	Yes	Section 63.4310 specifies the dates for submitting the notification of compliance status.
§ 63.9(i)	Adjustment of Submittal Deadlines	Yes.	
§ 63.9(j)	Change in Previous Information	Yes.	
§ 63.9(k)	Electronic reporting procedures	Yes	Only as specified in § 63.9(j).
§ 63.10(a)	Recordkeeping/Reporting—Applicability and General Information.	Yes.	
§ 63.10(b)(1)	General Recordkeeping Requirements.	Yes	Additional Requirements are specified in §§ 63.4312 and 63.4313.
§ 63.10(b)(2)(i)	Recordkeeping of Occurrence and Duration of Startups and Shutdowns.	Yes, before September 12, 2019. No, on and after September 12, 2019.	*See* § 63.4312(i)
§ 63.10(b)(2)(ii)	Recordkeeping of Failures to Meet Standards.	Yes, before September 12, 2019. No, on and after September 12, 2019.	*See* § 63.4312(i).
§ 63.10(b)(2)(iii)	Recordkeeping Relevant to Maintenance of Air Pollution Control and Monitoring Equipment.	Yes.	
§ 63.10(b)(2)(iv)–(v)	Actions Taken to Minimize Emissions During Startup, Shutdown, and Malfunction.	Yes, before September 12, 2019. No, on and after September 12, 2019.	*See* § 63.4312(i)(4) for a record of actions taken to minimize emissions during a deviation from the standard.
§ 63.10(b)(2)(vi)	Recordkeeping for CMS malfunctions.	Yes, before September 12, 2019. No, on and after September 12, 2019..	*See* § 63.4312(i) for records of periods of deviation from the standard, including instances where a CMS is inoperative or out-of-control.
§ 63.10(b)(2)(vii)–(xi)	Records	Yes.	
§ 63.10(b)(2)(xii)	Records	Yes.	
§ 63.10(b)(2)(xiii)		No	Subpart OOOO does not require the use of CEMS.
§ 63.10(b)(2)(xiv)		Yes.	
§ 63.10(b)(3)	Recordkeeping Requirements for Applicability Determinations.	Yes.	
§ 63.10(c)(1)–(6)	Additional Recordkeeping Requirements for Sources with CMS.	Yes.	
§ 63.10(c)(7)–(8)	Additional Recordkeeping Requirements for Sources with CMS.	No	*See* § 63.4312(i)(1) for records of periods of deviation from the standard, including instances where a CMS is inoperative or out-of-control.
§ 63.10(c)(10)–(14)	Additional Recordkeeping Requirements for Sources with CMS.	Yes.	
§ 63.10(c)(15)	Records Regarding the Startup, Shutdown, and Malfunction Plan.	Yes, before September 12, 2019. No, on and after September 12, 2019.	

sfrattini on LAPJZKW1R2 with $$_JOB
VerDate Sep<11>2014 09:16 Apr 04, 2023 Jkt 256165 PO 00000 Frm 00920 Fmt 8010 Sfmt 8002 Q:\40\256165.XXX PC31

[You must comply with the applicable General Provisions requirements according to the following table:]

Citation	Subject	Applicable to subpart OOOO	Explanation
§ 63.10(d)(1)	General Reporting Requirements	Yes	Additional requirements are specified in § 63.4311.
§ 63.10(d)(2)	Report of Performance Test Results	Yes	Additional requirements are specified in § 63.4311(b).
§ 63.10(d)(3)	Reporting Opacity or Visible Emissions Observations.	No	Subpart OOOO does not require opacity or visible emissions observations.
§ 63.10(d)(4)	Progress Reports for Sources With Compliance Extensions.	Yes.	
§ 63.10(d)(5)	Startup, Shutdown, and Malfunction Reports.	Yes, before September 12, 2019. No, on and after September 12, 2019.	*See* § 63.4311(a)(7).
§ 63.10(e)(1)–(2)	Additional CMS Reports	No	Subpart OOOO does not require the use of CEMS.
§ 63.10(e)(3)	Excess Emissions/CMS Performance Reports.	No	Section 63.4311(a) specifies the contents of periodic compliance reports.
§ 63.10(e)(4)	COMS Data Reports	No	Subpart OOOO does not specify requirements for opacity or COMS.
§ 63.10(f)	Recordkeeping/Reporting Waiver	Yes.	
§ 63.11	Control Device Requirements/Flares	No	Subpart OOOO does not specify use of flares for compliance.
§ 63.12	State Authority and Delegations	Yes.	
§ 63.13	Addresses	Yes.	
§ 63.14	Incorporation by Reference	Yes	ASNI/ASME PTC 19.10–1981, part 10.
§ 63.15	Availability of Information/Confidentiality.	Yes	

[84 FR 9631, Mar. 15, 2019, as amended at 85 FR 73907, Nov. 19, 2020]

Table 4 to Subpart OOOO of Part 63—Default Organic HAP Mass Fraction for Solvents and Solvent Blends

You may use the mass fraction values in the following table for solvent blends for which you do not have test data or manufacturer's formulation data.

Solvent/solvent blend	CAS. No.	Average organic HAP mass fraction	Typical organic HAP, percent by mass
1. Toluene	108–88–3	1.0	Toluene.
2. Xylene(s)	1330–20–7	1.0	Xylenes, ethylbenzene.
3. Hexane	110–54–3	0.5	n-hexane.
4. n-Hexane	110–54–3	1.0	n-hexane.
5. Ethylbenzene	100–41–4	1.0	Ethylbenzene.
6. Aliphatic 140		0	None.
7. Aromatic 100		0.02	1% xylene, 1% cumene.
8. Aromatic 150		0.09	Naphthalene.
9. Aromatic naphta	64742–95–6	0.02	1% xylene, 1% cumene.
10. Aromatic solvent	64742–94–5	0.1	Naphthalene.
11. Exempt mineral spirits	8032–32–4	0	None.
12. Ligroines (VM & P)	8032–32–4	0	None.
13. Lactol spirits	64742–89–6	0.15	Toluene.
14. Low aromatic white spirit	64742–82–1	0	None.
15. Mineral spirits	64742–88–7	0.01	Xylenes.
16. Hydrotreated naphtha	64742–48–9	0	None.
17. Hydrotreated light distillate	64742–47–8	0.001	Toluene.
18. Stoddard solvent	8052–41–3	0.01	Xylenes.
19. Super high-flash naphtha	64742–95–6	0.05	Xylenes.
20. Varsol® solvent	8052–49–3	0.01	0.5% xylenes, 0.5% ethylbenzene.
21. VM & P naphtha	64742–89–8	0.06	3% toluene, 3% xylene.
22. Petroleum distillate mixture	68477–31–6	0.08	4% naphthalene, 4% biphenyl.

sfrattini on LAPJZKW1R2 with $$_JOB
VerDate Sep<11>2014 09:16 Apr 04, 2023 Jkt 256165 PO 00000 Frm 00921 Fmt 8010 Sfmt 8026 Q:\40\256165.XXX PC31

TABLE 5 TO SUBPART OOOO OF PART 63—DEFAULT ORGANIC HAP MASS FRACTION FOR PETROLEUM SOLVENT GROUPS [A]

You may use the mass fraction values in the following table for solvent blends for which you do not have test data or manufacturer's formulation data:

Solvent type	Average organic HAP mass fraction	Typical organic HAP, percent by mass
Aliphatic [b]	0.03	1% Xylene, 1% Toluene, and 1% Ethylbenzene.
Aromatic [c]	0.06	4% Xylene, 1% Toluene, and 1% Ethylbenzene.

[a] Use this table only if the solvent blend does not match any of the solvent blends in Table 4 to this subpart and you only know whether the blend is aliphatic or aromatic.
[b] Mineral Spirits 135, Mineral Spirits 150 EC, Naphtha, Mixed Hydrocarbon, Aliphatic Hydrocarbon, Aliphatic Naphtha, Naphthol Spirits, Petroleum Spirits, Petroleum Oil, Petroleum Naphtha, Solvent Naphtha, Solvent Blend.
[c] Medium-flash Naphtha, High-flash Naphtha, Aromatic Naphtha, Light Aromatic Naphtha, Light Aromatic Hydrocarbons, Aromatic Hydrocarbons, Light Aromatic Solvent.

TABLE 6 TO SUBPART OOOO OF PART 63—LIST OF HAZARDOUS AIR POLLUTANTS THAT MUST BE COUNTED TOWARD TOTAL ORGANIC HAP CONTENT IF PRESENT AT 0.1 PERCENT OR MORE BY MASS

Chemical name	CAS No.
1,1,2,2-Tetrachloroethane	79–34–5
1,1,2-Trichloroethane	79–00–5
1,1-Dimethylhydrazine	57–14–7
1,2-Dibromo-3-chloropropane	96–12–8
1,2-Diphenylhydrazine	122–66–7
1,3-Butadiene	106–99–0
1,3-Dichloropropene	542–75–6
1,4-Dioxane	123–91–1
2,4,6-Trichlorophenol	88–06–2
2,4/2,6-Dinitrotoluene (mixture)	25321–14–6
2,4-Dinitrotoluene	121–14–2
2,4-Toluene diamine	95–80–7
2-Nitropropane	79–46–9
3,3'-Dichlorobenzidine	91–94–1
3,3'-Dimethoxybenzidine	119–90–4
3,3'-Dimethylbenzidine	119–93–7
4,4'-Methylene bis(2-chloroaniline)	101–14–4
Acetaldehyde	75–07–0
Acrylamide	79–06–1
Acrylonitrile	107–13–1
Allyl chloride	107–05–1
alpha-Hexachlorocyclohexane (a-HCH)	319–84–6
Aniline	62–53–3
Benzene	71–43–2
Benzidine	92–87–5
Benzotrichloride	98–07–7
Benzyl chloride	100–44–7
beta-Hexachlorocyclohexane (b-HCH)	319–85–7
Bis(2-ethylhexyl)phthalate	117–81–7
Bis(chloromethyl)ether	542–88–1
Bromoform	75–25–2
Captan	133–06–2
Carbon tetrachloride	56–23–5
Chlordane	57–74–9
Chlorobenzilate	510–15–6
Chloroform	67–66–3
Chloroprene	126–99–8
Cresols (mixed)	1319–77–3
DDE	3547–04–4
Dichloroethyl ether	111–44–4
Dichlorvos	62–73–7
Epichlorohydrin	106–89–8
Ethyl acrylate	140–88–5
Ethylene dibromide	106–93–4
Ethylene dichloride	107–06–2
Ethylene oxide	75–21–8
Ethylene thiourea	96–45–7
Ethylidene dichloride (1,1-Dichloroethane)	75–34–3
Formaldehyde	50–00–0
Heptachlor	76–44–8
Hexachlorobenzene	118–74–1
Hexachlorobutadiene	87–68–3
Hexachloroethane	67–72–1
Hydrazine	302–01–2
Isophorone	78–59–1
Lindane (hexachlorocyclohexane, all isomers)	58–89–9
m-Cresol	108–39–4
Methylene chloride	75–09–2
Naphthalene	91–20–3
Nitrobenzene	98–95–3
Nitrosodimethylamine	62–75–9
o-Cresol	95–48–7
o-Toluidine	95–53–4
Parathion	56–38–2
p-Cresol	106–44–5
p-Dichlorobenzene	106–46–7
Pentachloronitrobenzene	82–68–8
Pentachlorophenol	87–86–5
Propoxur	114–26–1
Propylene dichloride	78–87–5
Propylene oxide	75–56–9
Quinoline	91–22–5
Tetrachloroethene	127–18–4
Toxaphene	8001–35–2
Trichloroethylene	79–01–6
Trifluralin	1582–09–8
Vinyl bromide	593–60–2
Vinyl chloride	75–01–4
Vinylidene chloride	75–35–4

[84 FR 9634, Mar. 15, 2019]

Subpart PPPP—National Emission Standards for Hazardous Air Pollutants for Surface Coating of Plastic Parts and Products

SOURCE: 69 FR 20990, Apr. 19, 2004, unless otherwise noted.

sfrattini on LAPJZKW1R2 with $$_JOB
VerDate Sep<11>2014 09:16 Apr 04, 2023 Jkt 256165 PO 00000 Frm 00922 Fmt 8010 Sfmt 8010 Q:\40\256165.XXX PC31

WHAT THIS SUBPART COVERS

§ 63.4480 What is the purpose of this subpart?

This subpart establishes national emission standards for hazardous air pollutants (NESHAP) for plastic parts and products surface coating facilities. This subpart also establishes requirements to demonstrate initial and continuous compliance with the emission limitations.

§ 63.4481 Am I subject to this subpart?

(a) Plastic parts and products include, but are not limited to, plastic components of the following types of products as well as the products themselves: Motor vehicle parts and accessories for automobiles, trucks, recreational vehicles; sporting and recreational goods; toys; business machines; laboratory and medical equipment; and household and other consumer products. Except as provided in paragraph (c) of this section, the source category to which this subpart applies is the surface coating of any plastic parts or products, as described in paragraph (a)(1) of this section, and it includes the subcategories listed in paragraphs (a)(2) through (5) of this section.

(1) Surface coating is the application of coating to a substrate using, for example, spray guns or dip tanks. When application of coating to a substrate occurs, then surface coating also includes associated activities, such as surface preparation, cleaning, mixing, and storage. However, these activities do not comprise surface coating if they are not directly related to the application of the coating. Coating application with handheld, non-refillable aerosol containers, touch-up markers, marking pens, or the application of paper film or plastic film which may be pre-coated with an adhesive by the manufacturer are not coating operations for the purposes of this subpart.

(2) The general use coating subcategory includes all surface coating operations that are not automotive lamp coating operations, thermoplastic olefin (TPO) coating operations, or assembled on-road vehicle coating operations.

(3) The automotive lamp coating subcategory includes the surface coating of plastic components of the body of an exterior automotive lamp including, but not limited to, headlamps, tail lamps, turn signals, and marker (clearance) lamps; typical coatings used are reflective argent coatings and clear topcoats. This subcategory does not include the coating of interior automotive lamps, such as dome lamps and instrument panel lamps.

(4) The TPO coating subcategory includes the surface coating of TPO substrates; typical coatings used are adhesion promoters, color coatings, clear coatings and topcoats. The coating of TPO substrates on fully assembled on-road vehicles is not included in the TPO coating subcategory.

(5) The assembled on-road vehicle coating subcategory includes surface coating of fully assembled motor vehicles and trailers intended for on-road use, including, but not limited to: automobiles, light-duty trucks, heavy duty trucks, and busses that have been repaired after a collision or otherwise repainted; fleet delivery trucks; and motor homes and other recreational vehicles (including camping trailers and fifth wheels). This subcategory also includes the incidental coating of parts, such as radiator grilles, that are removed from the fully assembled on-road vehicle to facilitate concurrent coating of all parts associated with the vehicle. The assembled on-road vehicle coating subcategory does not include the surface coating of plastic parts prior to their attachment to an on-road vehicle on an original equipment manufacturer's (OEM) assembly line. The assembled on-road vehicle coating subcategory also does not include the use of adhesives, sealants, and caulks used in assembling on-road vehicles. Body fillers used to correct small surface defects and rubbing compounds used to remove surface scratches are not considered coatings subject to this subpart.

(b) You are subject to this subpart if you own or operate a new, reconstructed, or existing affected source, as defined in § 63.4482, that uses 378 liters (100 gallons (gal)) per year, or more, of coatings that contain hazardous air pollutants (HAP) in the surface coating

sfrattini on LAPJZKW1R2 with $$_JOB
VerDate Sep<11>2014 09:16 Apr 04, 2023 Jkt 256165 PO 00000 Frm 00923 Fmt 8010 Sfmt 8010 Q:\40\256165.XXX PC31

of plastic parts and products defined in paragraph (a) of this section; and that is a major source, is located at a major source, or is part of a major source of emissions of HAP. A major source of HAP emissions is any stationary source or group of stationary sources located within a contiguous area and under common control that emits or has the potential to emit any single HAP at a rate of 9.07 megagrams (Mg) (10 tons) or more per year or any combination of HAP at a rate of 22.68 Mg (25 tons) or more per year. You do not need to include coatings that meet the definition of non-HAP coating contained in § 63.4581 in determining whether you use 378 liters (100 gallons) per year, or more, of coatings in the surface coating of plastic parts and products.

(c) This subpart does not apply to surface coating or a coating operation that meets any of the criteria of paragraphs (c)(1) through (17) of this section.

(1) A coating operation conducted at a facility where the facility uses only coatings, thinners and other additives, and cleaning materials that contain no organic HAP, as determined according to § 63.3941(a).

(2) Surface coating operations that occur at research or laboratory facilities, or is part of janitorial, building, and facility maintenance operations, or that occur at hobby shops that are operated for noncommercial purposes.

(3) The surface coating of plastic parts and products performed on-site at installations owned or operated by the Armed Forces of the United States (including the Coast Guard and the National Guard of any such State) or the National Aeronautics and Space Administration, or the surface coating of military munitions manufactured by or for the Armed Forces of the United States (including the Coast Guard and the National Guard of any such State).

(4) Surface coating where plastic is extruded onto plastic parts or products to form a coating.

(5) Surface coating of magnet wire.

(6) In-mold coating operations or gel coating operations in the manufacture of reinforced plastic composite parts that meet the applicability criteria for reinforced plastics composites production (subpart WWWW of this part).

(7) Surface coating of plastic components of wood furniture that meet the applicability criteria for wood furniture manufacturing (subpart JJ of this part).

(8) Surface coating of plastic components of large appliances that meet the applicability criteria for large appliance surface coating (subpart NNNN of this part).

(9) Surface coating of plastic components of metal furniture that meet the applicability criteria for metal furniture surface coating (subpart RRRR of this part).

(10) Surface coating of plastic components of wood building products that meet the applicability criteria for wood building products surface coating (subpart QQQQ of this part).

(11) Surface coating of plastic components of aerospace vehicles that meet the applicability criteria for aerospace manufacturing and rework (40 CFR part 63, subpart GG).

(12) Surface coating of plastic parts intended for use in an aerospace vehicle or component using specialty coatings as defined in appendix A to subpart GG of this part.

(13) Surface coating of plastic components of ships that meet the applicability criteria for shipbuilding and ship repair (subpart II of this part).

(14) Surface coating of plastic using a web coating process that meets the applicability criteria for paper and other web coating (subpart JJJJ of this part).

(15) Surface coating of fiberglass boats or parts of fiberglass boats (including, but not limited to, the use of assembly adhesives) where the facility meets the applicability criteria for boat manufacturing (subpart VVVV of this part), except where the surface coating of the boat is a post-mold coating operation performed on personal watercraft or parts of personal watercraft. This subpart does apply to post-mold coating operations performed on personal watercraft and parts of personal watercraft.

(16) Surface coating of plastic components of automobiles and light-duty

sfrattini on LAPJZKW1R2 with $$_JOB
VerDate Sep<11>2014 09:16 Apr 04, 2023 Jkt 256165 PO 00000 Frm 00924 Fmt 8010 Sfmt 8010 Q:\40\256165.XXX PC31

trucks that meet the applicability criteria in §63.3082(b) of the Surface Coating of Automobiles and Light-Duty Trucks NESHAP (40 CFR part 63, subpart IIII) at a facility that meets the applicability criteria in §63.3081(b).

(17) Screen printing.

(d) If your facility meets the applicability criteria in §63.3081(b) of the Surface Coating of Automobiles and Light-Duty Trucks NESHAP (40 CFR part 63, subpart IIII) and you perform surface coating of plastic parts or products that meets both the applicability criteria in §63.3082(c) and the applicability criteria of this subpart, then for the surface coating of any or all of your plastic parts or products that meets the applicability criteria in §63.3082(c), you may choose to comply with the requirements of subpart IIII of this part in lieu of complying with this subpart. Surface coating operations on plastic parts or products (e.g., parts for motorcycles or lawnmowers) not intended for use in automobiles, light-duty trucks, or other motor vehicles as defined in §63.3176 cannot be made part of your affected source under subpart IIII of this part.

(e) If you own or operate an affected source that meets the applicability criteria of this subpart and at the same facility you also perform surface coating that meets the applicability criteria of any other final surface coating NESHAP in this part, you may choose to comply as specified in paragraph (e)(1), (2), or (3) of this section.

(1) You may have each surface coating operation that meets the applicability criteria of a separate NESHAP comply with that NESHAP separately.

(2) You may comply with the emission limitation representing the predominant surface coating activity at your facility, as determined according to paragraphs (e)(2)(i) and (ii) of this section. However, you may not establish assembled on-road vehicle or automotive lamp coating operations as the predominant activity. You must not consider any surface coating activity that is subject to the Surface Coating of Automobiles and Light-Duty Trucks NESHAP (40 CFR part 63, subpart IIII) in determining the predominant surface coating activity at your facility.

(i) If a surface coating operation accounts for 90 percent or more of the surface coating activity at your facility (that is, the predominant activity), then compliance with the emission limitations of the predominant activity for all surface coating operations constitutes compliance with these and other applicable surface coating NESHAP. In determining predominant activity, you must include coating activities that meet the applicability criteria of other surface coating NESHAP and constitute more than 1 percent of total coating activities at your facility. Coating activities that meet the applicability criteria of other surface coating NESHAP but comprise less than 1 percent of coating activities need not be included in the determination of predominant activity but must be included in the compliance calculation.

(ii) You must use kilogram (kg) (pound (lb)) of solids used as a measure of relative surface coating activity over a representative period of operation. You may estimate the relative mass of coating solids used from parameters other than coating consumption and mass solids content (*e.g.*, design specifications for the parts or products coated and the number of items produced). The determination of predominant activity must accurately reflect current and projected coating operations and must be verifiable through appropriate documentation. The use of parameters other than coating consumption and mass solids content must be approved by the Administrator. You may use data for any reasonable time period of at least 1 year in determining the relative amount of coating activity, as long as they represent the way the source will continue to operate in the future and are approved by the Administrator. You must determine the predominant activity at your facility and submit the results of that determination with the initial notification required by §63.4510(b). You must also determine predominant activity annually and include the determination in the next semi-annual compliance report required by §63.4520(a).

(3) You may comply with a facility-specific emission limit calculated from the relative amount of coating activity

sfrattini on LAPJZKW1R2 with $$_JOB
VerDate Sep<11>2014 09:16 Apr 04, 2023 Jkt 256165 PO 00000 Frm 00925 Fmt 8010 Sfmt 8010 Q:\40\256165.XXX PC31

that is subject to each emission limit. If you elect to comply using the facility-specific emission limit alternative, then compliance with the facility-specific emission limit and the emission limitations in this subpart for all surface coating operations constitutes compliance with this subpart and other applicable surface coating NESHAP. The procedures for calculating the facility-specific emission limit are specified in § 63.4490. In calculating a facility-specific emission limit, you must include coating activities that meet the applicability criteria of other surface coating NESHAP and constitute more than 1 percent of total coating activities at your facility. You must not consider any surface coating activity that is subject to the Surface Coating of Automobiles and Light-Duty Trucks NESHAP (40 CFR part 63, subpart IIII) in determining a facility-specific emission limit for your facility. Coating activities that meet the applicability criteria of other surface coating NESHAP but comprise less than 1 percent of total coating activities need not be included in the calculation of the facility-specific emission limit but must be included in the compliance calculations.

[69 FR 20990, Apr. 19, 2004, as amended at 69 FR 22660, Apr. 26, 2004; 71 FR 76927, Dec. 22, 2006; 72 FR 20237, Apr. 24, 2007]

§ 63.4482 What parts of my plant does this subpart cover?

(a) This subpart applies to each new, reconstructed, and existing affected source within each of the four subcategories listed in § 63.4481(a).

(b) The affected source is the collection of all of the items listed in paragraphs (b)(1) through (4) of this section that are used for surface coating of plastic parts and products within each subcategory.

(1) All coating operations as defined in § 63.4581;

(2) All storage containers and mixing vessels in which coatings, thinners and/or other additives, and cleaning materials are stored or mixed;

(3) All manual and automated equipment and containers used for conveying coatings, thinners and/or other additives, and cleaning materials; and

(4) All storage containers and all manual and automated equipment and containers used for conveying waste materials generated by a coating operation.

(c) An affected source is a new source if it meets the criteria in paragraph (c)(1) of this section and the criteria in either paragraph (c)(2) or (3) of this section.

(1) You commenced the construction of the source after December 4, 2002 by installing new coating equipment.

(2) The new coating equipment is used to coat plastic parts and products at a source where no plastic parts surface coating was previously performed.

(3) The new coating equipment is used to perform plastic parts and products coating in a subcategory that was not previously performed.

(d) An affected source is reconstructed if you meet the criteria as defined in § 63.2.

(e) An affected source is existing if it is not new or reconstructed.

§ 63.4483 When do I have to comply with this subpart?

The date by which you must comply with this subpart is called the compliance date. The compliance date for each type of affected source is specified in paragraphs (a) through (c) of this section. The compliance date begins the initial compliance period during which you conduct the initial compliance demonstration described in §§ 63.4540, 63.4550, and 63.4560.

(a) For a new or reconstructed affected source, the compliance date is the applicable date in paragraph (a)(1) or (2) of this section:

(1) If the initial startup of your new or reconstructed affected source is before April 19, 2004, the compliance date is April 19, 2004.

(2) If the initial startup of your new or reconstructed affected source occurs after April 19, 2004, the compliance date is the date of initial startup of your affected source.

(b) For an existing affected source, the compliance date is the date 3 years after April 19, 2004.

(c) For an area source that increases its emissions or its potential to emit such that it becomes a major source of HAP emissions, the compliance date is

sfrattini on LAPJZKW1R2 with $$_JOB
VerDate Sep<11>2014 09:16 Apr 04, 2023 Jkt 256165 PO 00000 Frm 00926 Fmt 8010 Sfmt 8010 Q:\40\256165.XXX PC31

specified in paragraphs (c)(1) and (2) of this section.

(1) For any portion of the source that becomes a new or reconstructed affected source subject to this subpart, the compliance date is the date of initial startup of the affected source or April 19, 2004, whichever is later.

(2) For any portion of the source that becomes an existing affected source subject to this subpart, the compliance date is the date 1 year after the area source becomes a major source or 3 years after April 19, 2004, whichever is later.

(d) You must meet the notification requirements in § 63.4510 according to the dates specified in that section and in subpart A of this part. Some of the notifications must be submitted before the compliance dates described in paragraphs (a) through (c) of this section.

EMISSION LIMITATIONS

§ 63.4490 What emission limits must I meet?

(a) For a new or reconstructed affected source, you must limit organic HAP emissions to the atmosphere from the affected source to the applicable limit specified in paragraphs (a)(1) through (4) of this section, except as specified in paragraph (c) of this section, determined according to the requirements in § 63.4541, § 63.4551, or § 63.4561.

(1) For each new general use coating affected source, limit organic HAP emissions to no more than 0.16 kg (0.16 lb) organic HAP emitted per kg (lb) coating solids used during each 12-month compliance period.

(2) For each new automotive lamp coating affected source, limit organic HAP emissions to no more than 0.26 kg (0.26 lb) organic HAP emitted per kg (lb) coating solids used during each 12-month compliance period.

(3) For each new TPO coating affected source, limit organic HAP emissions to no more than 0.22 kg (0.22 lb) organic HAP emitted per kg (lb) coating solids used during each 12-month compliance period.

(4) For each new assembled on-road vehicle coating affected source, limit organic HAP emissions to no more than 1.34 kg (1.34 lb) organic HAP emitted per kg (lb) coating solids used during each 12-month compliance period.

(b) For an existing affected source, you must limit organic HAP emissions to the atmosphere from the affected source to the applicable limit specified in paragraphs (b)(1) through (4) of this section, except as specified in paragraph (c) of this section, determined according to the requirements in § 63.4541, § 63.4551, or § 63.4561.

(1) For each existing general use coating affected source, limit organic HAP emissions to no more than 0.16 kg (0.16 lb) organic HAP emitted per kg (lb) coating solids used during each 12-month compliance period.

(2) For each existing automotive lamp coating affected source, limit organic HAP emissions to no more than 0.45 kg (0.45 lb) organic HAP emitted per kg (lb) coating solids used during each 12-month compliance period.

(3) For each existing TPO coating affected source, limit organic HAP emissions to no more than 0.26 kg (0.26 lb) organic HAP emitted per kg (lb) coating solids used during each 12-month compliance period.

(4) For each existing assembled on-road vehicle coating affected source, limit organic HAP emissions to no more than 1.34 kg (1.34 lb) organic HAP emitted per kg (lb) coating solids used during each 12-month compliance period.

(c) If your facility's surface coating operations meet the applicability criteria of more than one of the subcategory emission limits specified in paragraphs (a) or (b) of this section, you may comply separately with each subcategory emission limit or comply using one of the alternatives in paragraph (c)(1) or (2) of this section.

(1) If the general use or TPO surface coating operations subject to only one of the emission limits specified in paragraphs (a)(1), (a)(3), (b)(1), or (b)(3) of this section account for 90 percent or more of the surface coating activity at your facility (*i.e.*, it is the predominant activity at your facility), then compliance with that emission limitation for all surface coating operations constitutes compliance with the other applicable emission limitations. You must use kg (lb) of solids used as a

sfrattini on LAPJZKW1R2 with $$_JOB
VerDate Sep<11>2014 09:16 Apr 04, 2023 Jkt 256165 PO 00000 Frm 00927 Fmt 8010 Sfmt 8010 Q:\40\256165.XXX PC31

measure of relative surface coating activity over a representative period of operation. You may estimate the relative mass of coating solids used from parameters other than coating consumption and mass solids content (*e.g.*, design specifications for the parts or products coated and the number of items produced). The determination of predominant activity must accurately reflect current and projected coating operations and must be verifiable through appropriate documentation. The use of parameters other than coating consumption and mass solids content must be approved by the Administrator. You may use data for any reasonable time period of at least 1 year in determining the relative amount of coating activity, as long as they represent the way the source will continue to operate in the future and are approved by the Administrator. You must determine the predominant activity at your facility and submit the results of that determination with the initial notification required by § 63.4510(b). Additionally, you must determine the facility's predominant activity annually and include the determination in the next semi-annual compliance report required by § 63.4520(a).

(2) You may calculate and comply with a facility-specific emission limit as described in paragraphs (c)(2)(i) through (iii) of this section. If you elect to comply using the facility-specific emission limit alternative, then compliance with the facility-specific emission limit and the emission limitations in this subpart for all surface coating operations constitutes compliance with this and other applicable surface coating NESHAP. In calculating a facility-specific emission limit, you must include coating activities that meet the applicability criteria of the other subcategories and constitute more than 1 percent of total coating activities. Coating activities that meet the applicability criteria of other surface coating NESHAP but comprise less than 1 percent of coating activities need not be included in the determination of predominant activity but must be included in the compliance calculation.

(i) You are required to calculate the facility-specific emission limit for your facility when you submit the notification of compliance status required in § 63.4510(c), and on a monthly basis afterward using the coating data for the relevant 12-month compliance period.

(ii) Use Equation 1 of this section to calculate the facility-specific emission limit for your surface coating operations for each 12-month compliance period.

$$\text{Facility} - \text{Specific Emission Limit} = \frac{\sum_{i=1}^{n}(\text{Limit}_i)(\text{Solids}_i)}{\sum_{i=1}^{n}(\text{Solids}_i)} \qquad \text{(Eq. 1)}$$

Where:

Facility-specific emission limit = Facility-specific emission limit for each 12-month compliance period, kg (lb) organic HAP per kg (lb) coating solids used.

Limit_i = The new source or existing source emission limit applicable to coating operation, i, included in the facility-specific emission limit, converted to kg (lb) organic HAP per kg (lb) coating solids used, if the emission limit is not already in those units. All emission limits included in the facility-specific emission limit must be in the same units.

Solids_i = The kg (lb) of solids used in coating operation, i, in the 12-month compliance period that is subject to emission limit, i. You may estimate the mass of coating solids used from parameters other than coating consumption and mass solids content (*e.g.*, design specifications for the parts or products coated and the number of items produced). The use of parameters other than coating consumption and mass solids content must be approved by the Administrator.

sfrattini on LAPJZKW1R2 with $$_JOB
VerDate Sep<11>2014 09:16 Apr 04, 2023 Jkt 256165 PO 00000 Frm 00928 Fmt 8010 Sfmt 8010 Q:\40\256165.XXX PC31
ER19AP04.002</MATH>

n = The number of different coating operations included in the facility-specific emission limit.

(iii) If you need to convert an emission limit in another surface coating NESHAP from kg (lb) organic HAP per liter (gallon) coating solids used to kg (lb) organic HAP per kg (lb) coating solids used, you must use the default solids density of 1.50 kg solids per liter coating solids (12.5 lb solids per gal solids).

§ 63.4491 What are my options for meeting the emission limits?

You must include all coatings (as defined in § 63.4581), thinners and/or other additives, and cleaning materials used in the affected source when determining whether the organic HAP emission rate is equal to or less than the applicable emission limit in § 63.4490. To make this determination, you must use at least one of the three compliance options listed in paragraphs (a) through (c) of this section. You may apply any of the compliance options to an individual coating operation, or to multiple coating operations as a group, or to the entire affected source. You may use different compliance options for different coating operations, or at different times on the same coating operation. You may employ different compliance options when different coatings are applied to the same part, or when the same coating is applied to different parts. However, you may not use different compliance options at the same time on the same coating operation. If you switch between compliance options for any coating operation or group of coating operations, you must document this switch as required by § 63.4530(c), and you must report it in the next semiannual compliance report required in § 63.4520.

(a) *Compliant material option*. Demonstrate that the organic HAP content of each coating used in the coating operation(s) is less than or equal to the applicable emission limit in § 63.4490, and that each thinner and/or other additive, and cleaning material used contains no organic HAP. You must meet all the requirements of §§ 63.4540, 63.4541, and 63.4542 to demonstrate compliance with the applicable emission limit using this option.

(b) *Emission rate without add-on controls option*. Demonstrate that, based on the coatings, thinners and/or other additives, and cleaning materials used in the coating operation(s), the organic HAP emission rate for the coating operation(s) is less than or equal to the applicable emission limit in § 63.4490, calculated as a rolling 12-month emission rate and determined on a monthly basis. You must meet all the requirements of §§ 63.4550, 63.4551, and 63.4552 to demonstrate compliance with the emission limit using this option.

(c) *Emission rate with add-on controls option*. Demonstrate that, based on the coatings, thinners and/or other additives, and cleaning materials used in the coating operation(s), and the emissions reductions achieved by emission capture systems and add-on controls, the organic HAP emission rate for the coating operation(s) is less than or equal to the applicable emission limit in § 63.4490, calculated as a rolling 12-month emission rate and determined on a monthly basis. If you use this compliance option, you must also demonstrate that all emission capture systems and add-on control devices for the coating operation(s) meet the operating limits required in § 63.4492, except for solvent recovery systems for which you conduct liquid-liquid material balances according to § 63.4561(j), and that you meet the work practice standards required in § 63.4493. You must meet all the requirements of §§ 63.4560 through 63.4568 to demonstrate compliance with the emission limits, operating limits, and work practice standards using this option.

§ 63.4492 What operating limits must I meet?

(a) For any coating operation(s) on which you use the compliant material option or the emission rate without add-on controls option, you are not required to meet any operating limits.

(b) For any controlled coating operation(s) on which you use the emission rate with add-on controls option, except those for which you use a solvent recovery system and conduct a liquid-liquid material balance according to § 63.4561(j), you must meet the operating limits specified in table 1 to this subpart. These operating limits apply

sfrattini on LAPJZKW1R2 with $$_JOB
VerDate Sep<11>2014 09:16 Apr 04, 2023 Jkt 256165 PO 00000 Frm 00929 Fmt 8010 Sfmt 8010 Q:\40\256165.XXX PC31

to the emission capture and control systems on the coating operation(s) for which you use this option, and you must establish the operating limits during the performance tests required in § 63.4560 according to the requirements in § 63.4567. You must meet the operating limits established during the most recent performance tests required in § 63.4560 at all times after you establish them.

(c) If you use an add-on control device other than those listed in Table 1 to this subpart, or wish to monitor an alternative parameter and comply with a different operating limit, you must apply to the Administrator for approval of alternative monitoring under § 63.8(f).

[69 FR 20990, Apr. 19, 2004, as amended at 85 FR 41150, July 8, 2020]

§ 63.4493 What work practice standards must I meet?

(a) For any coating operation(s) on which you use the compliant material option or the emission rate without add-on controls option, you are not required to meet any work practice standards.

(b) If you use the emission rate with add-on controls option, you must develop and implement a work practice plan to minimize organic HAP emissions from the storage, mixing, and conveying of coatings, thinners and/or other additives, and cleaning materials used in, and waste materials generated by the controlled coating operation(s) for which you use this option; or you must meet an alternative standard as provided in paragraph (c) of this section. The plan must specify practices and procedures to ensure that, at a minimum, the elements specified in paragraphs (b)(1) through (5) of this section are implemented.

(1) All organic-HAP-containing coatings, thinners and/or other additives, cleaning materials, and waste materials must be stored in closed containers.

(2) Spills of organic-HAP-containing coatings, thinners and/or other additives, cleaning materials, and waste materials must be minimized.

(3) Organic-HAP-containing coatings, thinners and/or other additives, cleaning materials, and waste materials must be conveyed from one location to another in closed containers or pipes.

(4) Mixing vessels which contain organic-HAP-containing coatings and other materials must be closed except when adding to, removing, or mixing the contents.

(5) Emissions of organic HAP must be minimized during cleaning of storage, mixing, and conveying equipment.

(c) As provided in § 63.6(g), we, the U.S. Environmental Protection Agency, may choose to grant you permission to use an alternative to the work practice standards in this section.

General Compliance Requirements

§ 63.4500 What are my general requirements for complying with this subpart?

(a) You must be in compliance with the emission limitations in this subpart as specified in paragraphs (a)(1) and (2) of this section.

(1) Any coating operation(s) for which you use the compliant material option or the emission rate without add-on controls option, as specified in § 63.4491(a) and (b), must be in compliance with the applicable emission limit in § 63.4490 at all times.

(2) Any coating operation(s) for which you use the emission rate with add-on controls option, as specified in § 63.4491(c), must be in compliance with the emission limitations as specified in paragraphs (a)(2)(i) through (iii) of this section.

(i) The coating operation(s) must be in compliance with the applicable emission limit in § 63.4490 at all times.

(ii) The coating operation(s) must be in compliance with the operating limits for emission capture systems and add-on control devices required by § 63.4492 at all times, except for solvent recovery systems for which you conduct liquid-liquid material balances according to § 63.4561(j).

(iii) The coating operation(s) must be in compliance with the work practice standards in § 63.4493 at all times.

(b) Before January 5, 2021, you must always operate and maintain your affected source, including all air pollution control and monitoring equipment you use for purposes of complying with

sfrattini on LAPJZKW1R2 with $$_JOB
VerDate Sep<11>2014 09:16 Apr 04, 2023 Jkt 256165 PO 00000 Frm 00930 Fmt 8010 Sfmt 8010 Q:\40\256165.XXX PC31

this subpart, according to the provisions in §63.6(e)(1)(i). On and after January 5, 2021, at all times, the owner or operator must operate and maintain any affected source, including associated air pollution control equipment and monitoring equipment, in a manner consistent with safety and good air pollution control practices for minimizing emissions. The general duty to minimize emissions does not require the owner or operator to make any further efforts to reduce emissions if levels required by the applicable standard have been achieved. Determination of whether a source is operating in compliance with operation and maintenance requirements will be based on information available to the Administrator that may include, but is not limited to, monitoring results, review of operation and maintenance procedures, review of operation and maintenance records, and inspection of the affected source.

(c) Before January 5, 2021, if your affected source uses an emission capture system and add-on control device, you must develop a written SSMP according to the provisions in §63.6(e)(3). The plan must address the startup, shutdown, and corrective actions in the event of a malfunction of the emission capture system or the add-on control device. The plan must also address any coating operation equipment that may cause increased emissions or that would affect capture efficiency if the process equipment malfunctions, such as conveyors that move parts among enclosures. On and after January 5, 2021, the SSMP is not required.

[69 FR 20990, Apr. 19, 2004, as amended at 71 FR 20465, Apr. 20, 2006; 85 FR 41150, July 8, 2020]

§63.4501 What parts of the General Provisions apply to me?

Table 2 to this subpart shows which parts of the General Provisions in §§63.1 through 63.15 apply to you.

NOTIFICATIONS, REPORTS, AND RECORDS

§63.4510 What notifications must I submit?

(a) *General.* You must submit the notifications in §§63.7(b) and (c), 63.8(f)(4), and 63.9(b) through (e) and (h) that apply to you by the dates specified in those sections, except as provided in paragraphs (b) and (c) of this section.

(b) *Initial notification.* You must submit the initial notification required by §63.9(b) for a new or reconstructed affected source no later than 120 days after initial startup, 120 days after April 19, 2004, or no later than 120 days after the source becomes subject to this subpart, whichever is later. For an existing affected source, you must submit the initial notification no later than 1 year after April 19, 2004, or no later than 120 days after the source becomes subject to this subpart, whichever is later. If you are using compliance with the Surface Coating of Automobiles and Light-Duty Trucks NESHAP (subpart IIII of this part) as provided for under §63.4481(d) to constitute compliance with this subpart for any or all of your plastic parts coating operations, then you must include a statement to this effect in your initial notification, and no other notifications are required under this subpart in regard to those plastic parts coating operations. If you are complying with another NESHAP that constitutes the predominant activity at your facility under §63.4481(e)(2) to constitute compliance with this subpart for your plastic parts coating operations, then you must include a statement to this effect in your initial notification, and no other notifications are required under this subpart in regard to those plastic parts coating operations.

(c) *Notification of compliance status.* You must submit the notification of compliance status required by §63.9(h) no later than 30 calendar days following the end of the initial compliance period described in §63.4540, §63.4550, or §63.4560 that applies to your affected source. The notification of compliance status must contain the information specified in paragraphs (c)(1) through (11) of this section and in §63.9(h).

(1) Company name and address.

(2) Statement by a responsible official with that official's name, title, and signature, certifying the truth, accuracy, and completeness of the content of the report.

sfrattini on LAPJZKW1R2 with $$_JOB
VerDate Sep<11>2014 09:16 Apr 04, 2023 Jkt 256165 PO 00000 Frm 00931 Fmt 8010 Sfmt 8010 Q:\40\256165.XXX PC31

(3) Date of the report and beginning and ending dates of the reporting period. The reporting period is the initial compliance period described in § 63.4540, § 63.4550, or § 63.4560 that applies to your affected source.

(4) Identification of the compliance option or options specified in § 63.4491 that you used on each coating operation in the affected source during the initial compliance period.

(5) Statement of whether or not the affected source achieved the emission limitations for the initial compliance period.

(6) If you had a deviation, include the information in paragraphs (c)(6)(i) and (ii) of this section.

(i) A description and statement of the cause of the deviation.

(ii) If you failed to meet the applicable emission limit in § 63.4490, include all the calculations you used to determine the kg (lb) organic HAP emitted per kg (lb) coating solids used. You do not need to submit information provided by the materials' suppliers or manufacturers, or test reports.

(7) For each of the data items listed in paragraphs (c)(7)(i) through (iv) of this section that is required by the compliance option(s) you used to demonstrate compliance with the emission limit, include an example of how you determined the value, including calculations and supporting data. Supporting data may include a copy of the information provided by the supplier or manufacturer of the example coating or material, or a summary of the results of testing conducted according to § 63.4541(a), (b), or (c). You do not need to submit copies of any test reports.

(i) Mass fraction of organic HAP for one coating, for one thinner and/or other additive, and for one cleaning material.

(ii) Mass fraction of coating solids for one coating.

(iii) Density for one coating, one thinner and/or other additive, and one cleaning material, except that if you use the compliant material option, only the example coating density is required.

(iv) The amount of waste materials and the mass of organic HAP contained in the waste materials for which you are claiming an allowance in Equation 1 of § 63.4551.

(8) The calculation of kg (lb) organic HAP emitted per kg (lb) coating solids used for the compliance option(s) you used, as specified in paragraphs (c)(8)(i) through (iii) of this section.

(i) For the compliant material option, provide an example calculation of the organic HAP content for one coating, using Equation 1 of § 63.4541.

(ii) For the emission rate without add-on controls option, provide the calculation of the total mass of organic HAP emissions for each month; the calculation of the total mass of coating solids used each month; and the calculation of the 12-month organic HAP emission rate using Equations 1 and 1A through 1C, 2, and 3, respectively, of § 63.4551.

(iii) For the emission rate with add-on controls option, provide the calculation of the total mass of organic HAP emissions for the coatings, thinners and/or other additives, and cleaning materials used each month, using Equations 1 and 1A through 1C of § 63.4551; the calculation of the total mass of coating solids used each month using Equation 2 of § 63.4551; the mass of organic HAP emission reduction each month by emission capture systems and add-on control devices using Equations 1 and 1A through 1D of § 63.4561 and Equations 2, 3, and 3A through 3C of § 63.4561, as applicable; the calculation of the total mass of organic HAP emissions each month using Equation 4 of § 63.4561; and the calculation of the 12-month organic HAP emission rate using Equation 5 of § 63.4561.

(9) For the emission rate with add-on controls option, you must include the information specified in paragraphs (c)(9)(i) through (iv) of this section, except that the requirements in paragraphs (c)(9)(i) through (iii) of this section do not apply to solvent recovery systems for which you conduct liquid-liquid material balances according to § 63.4561(j).

(i) For each emission capture system, a summary of the data and copies of the calculations supporting the determination that the emission capture system is a permanent total enclosure

sfrattini on LAPJZKW1R2 with $$_JOB
VerDate Sep<11>2014 09:16 Apr 04, 2023 Jkt 256165 PO 00000 Frm 00932 Fmt 8010 Sfmt 8010 Q:\40\256165.XXX PC31

(PTE) or a measurement of the emission capture system efficiency. Include a description of the protocol followed for measuring capture efficiency, summaries of any capture efficiency tests conducted, and any calculations supporting the capture efficiency determination. If you use the data quality objective (DQO) or lower confidence limit (LCL) approach, you must also include the statistical calculations to show you meet the DQO or LCL criteria in appendix A to subpart KK of this part. You do not need to submit complete test reports.

(ii) A summary of the results of each add-on control device performance test. You do not need to submit complete test reports.

(iii) A list of each emission capture system's and add-on control device's operating limits and a summary of the data used to calculate those limits.

(iv) A statement of whether or not you developed and implemented the work practice plan required by § 63.4493.

(10) If you are complying with a single emission limit representing the predominant activity under § 63.4490(c)(1), include the calculations and supporting information used to demonstrate that this emission limit represents the predominant activity as specified in § 63.4490(c)(1).

(11) If you are complying with a facility-specific emission limit under § 63.4490(c)(2), include the calculation of the facility-specific emission limit and any supporting information as specified in § 63.4490(c)(2).

[69 FR 20990, Apr. 19, 2004, as amended at 69 FR 22661, Apr. 26, 2004; 85 FR 73907, Nov. 19, 2020]

§ 63.4520 What reports must I submit?

(a) *Semiannual compliance reports.* You must submit semiannual compliance reports for each affected source according to the requirements of paragraphs (a)(1) through (7) of this section. The semiannual compliance reporting requirements may be satisfied by reports required under other parts of the Clean Air Act (CAA), as specified in paragraph (a)(2) of this section.

(1) *Dates.* Unless the Administrator has approved or agreed to a different schedule for submission of reports under § 63.10(a), you must prepare and submit each semiannual compliance report according to the dates specified in paragraphs (a)(1)(i) through (iv) of this section. Note that the information reported for each of the months in the reporting period will be based on the last 12 months of data prior to the date of each monthly calculation.

(i) The first semiannual compliance report must cover the first semiannual reporting period which begins the day after the end of the initial compliance period described in § 63.4540, § 63.4550, or § 63.4560 that applies to your affected source and ends on June 30 or December 31, whichever date is the first date following the end of the initial compliance period.

(ii) Each subsequent semiannual compliance report must cover the subsequent semiannual reporting period from January 1 through June 30 or the semiannual reporting period from July 1 through December 31.

(iii) Each semiannual compliance report must be postmarked or delivered no later than July 31 or January 31, whichever date is the first date following the end of the semiannual reporting period.

(iv) For each affected source that is subject to permitting regulations pursuant to 40 CFR part 70 or 40 CFR part 71, and if the permitting authority has established dates for submitting semiannual reports pursuant to 40 CFR 70.6(a)(3)(iii)(A) or 40 CFR 71.6(a)(3)(iii)(A), you may submit the first and subsequent compliance reports according to the dates the permitting authority has established instead of according to the date specified in paragraph (a)(1)(iii) of this section.

(2) *Inclusion with title V report.* Each affected source that has obtained a title V operating permit pursuant to 40 CFR part 70 or 40 CFR part 71 must report all deviations as defined in this subpart in the semiannual monitoring report required by 40 CFR 70.6(a)(3)(iii)(A) or 40 CFR 71.6(a)(3)(iii)(A). If an affected source submits a semiannual compliance report pursuant to this section along with, or as part of, the semiannual monitoring report required by 40 CFR 70.6(a)(3)(iii)(A) or 40 CFR 71.6(a)(3)(iii)(A), and the semiannual compliance report includes all required

sfrattini on LAPJZKW1R2 with $$_JOB
VerDate Sep<11>2014 09:16 Apr 04, 2023 Jkt 256165 PO 00000 Frm 00933 Fmt 8010 Sfmt 8010 Q:\40\256165.XXX PC31

information concerning deviations from any emission limitation in this subpart, its submission will be deemed to satisfy any obligation to report the same deviations in the semiannual monitoring report. However, submission of a semiannual compliance report shall not otherwise affect any obligation the affected source may have to report deviations from permit requirements to the permitting authority.

(3) *General requirements.* The semiannual compliance report must contain the information specified in paragraphs (a)(3)(i) through (vii) of this section, and the information specified in paragraphs (a)(4) through (7) and (c)(1) of this section that is applicable to your affected source.

(i) Company name and address.

(ii) Statement by a responsible official with that official's name, title, and signature, certifying the truth, accuracy, and completeness of the content of the report.

(iii) Date of report and beginning and ending dates of the reporting period. The reporting period is the 6-month period ending on June 30 or December 31. Note that the information reported for each of the 6 months in the reporting period will be based on the last 12 months of data prior to the date of each monthly calculation.

(iv) Identification of the compliance option or options specified in § 63.4491 that you used on each coating operation during the reporting period. If you switched between compliance options during the reporting period, you must report the beginning and ending dates for each option you used.

(v) If you used the emission rate without add-on controls or the emission rate with add-on controls compliance option (§ 63.4491(b) or (c)), the calculation results for each rolling 12-month organic HAP emission rate during the 6-month reporting period.

(vi) If you used the predominant activity alternative (§ 63.4490(c)(1)), include the annual determination of predominant activity if it was not included in the previous semi-annual compliance report.

(vii) If you used the facility-specific emission limit alternative (§ 63.4490(c)(2)), include the calculation of the facility-specific emission limit for each 12-month compliance period during the 6-month reporting period.

(4) *No deviations.* If there were no deviations from the emission limitations in §§ 63.4490, 63.4492, and 63.4493 that apply to you, the semiannual compliance report must include a statement that there were no deviations from the emission limitations during the reporting period. If you used the emission rate with add-on controls option and there were no periods during which the continuous parameter monitoring systems (CPMS) were out-of-control as specified in § 63.8(c)(7), the semiannual compliance report must include a statement that there were no periods during which the CPMS were out-of-control during the reporting period.

(5) *Deviations: Compliant material option.* If you used the compliant material option and there was a deviation from the applicable organic HAP content requirements in § 63.4490, the semiannual compliance report must contain the information in paragraphs (a)(5)(i) through (v) of this section.

(i) Identification of each coating used that deviated from the applicable emission limit, and each thinner and/or other additive, and cleaning material used that contained organic HAP, and the date, time, and duration each was used.

(ii) The calculation of the organic HAP content (using Equation 1 of § 63.4541) for each coating identified in paragraph (a)(5)(i) of this section. You do not need to submit background data supporting this calculation (*e.g.*, information provided by coating suppliers or manufacturers, or test reports).

(iii) The determination of mass fraction of organic HAP for each thinner and/or other additive, and cleaning material identified in paragraph (a)(5)(i) of this section. You do not need to submit background data supporting this calculation (*e.g.*, information provided by material suppliers or manufacturers, or test reports).

(iv) Before January 5, 2021, a statement of the cause of each deviation. On and after January 5, 2021, a statement of the cause of each deviation (including unknown cause, if applicable).

(v) On and after January 5, 2021, the number of deviations and, for each deviation, a list of the affected source or

sfrattini on LAPJZKW1R2 with $$_JOB
VerDate Sep<11>2014 09:16 Apr 04, 2023 Jkt 256165 PO 00000 Frm 00934 Fmt 8010 Sfmt 8010 Q:\40\256165.XXX PC31

equipment, an estimate of the quantity of each regulated pollutant emitted over any applicable emission limit in §63.4490, a description of the method used to estimate the emissions, and the actions you took to minimize emissions in accordance with §63.4500(b).

(6) *Deviations: Emission rate without add-on controls option.* If you used the emission rate without add-on controls option and there was a deviation from the applicable emission limit in §63.4490, the semiannual compliance report must contain the information in paragraphs (a)(6)(i) through (iv) of this section.

(i) The beginning and ending dates of each compliance period during which the 12-month organic HAP emission rate exceeded the applicable emission limit in §63.4490.

(ii) The calculations used to determine the 12-month organic HAP emission rate for the compliance period in which the deviation occurred. You must submit the calculations for Equations 1, 1A through 1C, 2, and 3 of §63.4551; and if applicable, the calculation used to determine mass of organic HAP in waste materials according to §63.4551(e)(4). You do not need to submit background data supporting these calculations (*e.g.*, information provided by materials suppliers or manufacturers, or test reports).

(iii) Before January 5, 2021, a statement of the cause of each deviation. On and after January 5, 2021, a statement of the cause of each deviation (including unknown cause, if applicable).

(iv) On and after January 5, 2021, the number of deviations, date, time, duration, a list of the affected source or equipment, an estimate of the quantity of each regulated pollutant emitted over any applicable emission limit in §63.4490, a description of the method used to estimate the emissions, and the actions you took to minimize emissions in accordance with §63.4500(b).

(7) *Deviations: Emission rate with add-on controls option.* If you used the emission rate with add-on controls option and there was a deviation from the applicable emission limit in §63.4490 or the applicable operating limit(s) in table 1 to this subpart (including any periods when emissions bypassed the add-on control device and were diverted to the atmosphere), before January 5, 2021, the semiannual compliance report must contain the information in paragraphs (a)(7)(i) through (xiv) of this section. This includes periods of SSM during which deviations occurred. On and after January 5, 2021, the semiannual compliance report must contain the information in paragraphs (a)(7)(i) through (xii), (xiv), and (xv) of this section. If you use the emission rate with add-on controls option and there was a deviation from the applicable work practice standards in §63.4493(b), the semiannual compliance report must contain the information in paragraph (a)(7)(xiii) of this section.

(i) The beginning and ending dates of each compliance period during which the 12-month organic HAP emission rate exceeded the applicable emission limit in §63.4490.

(ii) The calculations used to determine the 12-month organic HAP emission rate for each compliance period in which a deviation occurred. You must provide the calculation of the total mass of organic HAP emissions for the coatings, thinners and/or other additives, and cleaning materials used each month using Equations 1 and 1A through 1C of §63.4551; and, if applicable, the calculation used to determine mass of organic HAP in waste materials according to §63.4551(e)(4); the calculation of the total mass of coating solids used each month using Equation 2 of §63.4551; the calculation of the mass of organic HAP emission reduction each month by emission capture systems and add-on control devices using Equations 1 and 1A through 1D of §63.4561, and Equations 2, 3, and 3A through 3C of §63.4561, as applicable; the calculation of the total mass of organic HAP emissions each month using Equation 4 of §63.4561; and the calculation of the 12-month organic HAP emission rate using Equation 5 of §63.4561. You do not need to submit the background data supporting these calculations (*e.g.*, information provided by materials suppliers or manufacturers, or test reports).

(iii) The date and time that each malfunction of the capture system or add-on control devices started and stopped.

(iv) A brief description of the CPMS.

sfrattini on LAPJZKW1R2 with $$_JOB
VerDate Sep<11>2014 09:16 Apr 04, 2023 Jkt 256165 PO 00000 Frm 00935 Fmt 8010 Sfmt 8010 Q:\40\256165.XXX PC31

(v) The date of the latest CPMS certification or audit.

(vi) Before January 5, 2021, the date and time that each CPMS was inoperative, except for zero (low-level) and high-level checks. On and after January 5, 2021, the number of instances that the CPMS was inoperative, and for each instance, except for zero (low-level) and high-level checks, the date, time, and duration that the CPMS was inoperative; the cause (including unknown cause) for the CPMS being inoperative; and the actions you took to minimize emissions in accordance with § 63.4500(b).

(vii) Before January 5, 2021, the date, time, and duration that each CPMS was out-of-control, including the information in § 63.8(c)(8). On and after January 5, 2021, the number of instances that the CPMS was out of control as specified in § 63.8(c)(7) and, for each instance, the date, time, and duration that the CPMS was out-of-control; the cause (including unknown cause) for the CPMS being out-of-control; and descriptions of corrective actions taken.

(viii) Before January 5, 2021, the date and time period of each deviation from an operating limit in table 1 to this subpart; date and time period of any bypass of the add-on control device; and whether each deviation occurred during a period of SSM or during another period. On and after January 5, 2021, the number of deviations from an operating limit in table 1 to this subpart and, for each deviation, the date, time, and duration of each deviation; the date, time, and duration of any bypass of the add-on control device.

(ix) A summary of the total duration of each deviation from an operating limit in Table 1 to this subpart and each bypass of the add-on control device during the semiannual reporting period, and the total duration as a percent of the total source operating time during that semiannual reporting period.

(x) Before January 5, 2021, a breakdown of the total duration of the deviations from the operating limits in table 1 of this subpart and bypasses of the add-on control device during the semiannual reporting period into those that were due to startup, shutdown, control equipment problems, process problems, other known causes, and other unknown causes. On and after January 5, 2021, a breakdown of the total duration of the deviations from the operating limits in table 1 to this subpart and bypasses of the add-on control device during the semiannual reporting period into those that were due to control equipment problems, process problems, other known causes, and other unknown causes.

(xi) A summary of the total duration of CPMS downtime during the semiannual reporting period and the total duration of CPMS downtime as a percent of the total source operating time during that semiannual reporting period.

(xii) A description of any changes in the CPMS, coating operation, emission capture system, or add-on control device since the last semiannual reporting period.

(xiii) Before January 5, 2021, for each deviation from the work practice standards, a description of the deviation, the date and time period of the deviation, and the actions you took to correct the deviation. On and after January 5, 2021, for deviations from the work practice standards, the number of deviations, and, for each deviation, the information in paragraphs (a)(7)(xiii)(A) and (B) of this section:

(A) A description of the deviation; the date, time, and duration of the deviation; and the actions you took to minimize emissions in accordance with § 63.4500(b).

(B) The description required in paragraph (a)(7)(xiii)(A) of this section must include a list of the affected sources or equipment for which a deviation occurred and the cause of the deviation (including unknown cause, if applicable.

(xiv) Before January 5, 2021, a statement of the cause of each deviation. On and after January 5, 2021, for deviations from an emission limit in § 63.4490 or an operating limit in Table 1 to this subpart, a statement of the cause of each deviation (including unknown cause, if applicable) and the actions you took to minimize emissions in accordance with § 63.4500(b).

(xv) On and after January 5, 2021, for each deviation from an emission limit in § 63.4490 or operating limit in table 1

sfrattini on LAPJZKW1R2 with $$_JOB
VerDate Sep<11>2014 09:16 Apr 04, 2023 Jkt 256165 PO 00000 Frm 00936 Fmt 8010 Sfmt 8010 Q:\40\256165.XXX PC31

to this subpart, a list of the affected sources or equipment for which a deviation occurred, an estimate of the quantity of each regulated pollutant emitted over any emission limit in § 63.4490 or operating limit in table 1 to this subpart, and a description of the method used to estimate the emissions.

(b) *Performance test reports.* If you use the emission rate with add-on controls option, you must submit reports of performance test results for emission capture systems and add-on control devices no later than 60 days after completing the tests as specified in § 63.10(d)(2).

(c) *SSM reports.* Before January 5, 2021, if you used the emission rate with add-on controls option and you had a SSM during the semiannual reporting period, you must submit the reports specified in paragraphs (c)(1) and (2) of this section. On and after January 5, 2021, the reports specified in paragraphs (c)(1) and (2) of this section are not required.

(1) If your actions were consistent with your startup, shutdown, and malfunction plan, you must include the information specified in § 63.10(d) in the semiannual compliance report required by paragraph (a) of this section.

(2) If your actions were not consistent with your startup, shutdown, and malfunction plan, you must submit an immediate startup, shutdown, and malfunction report as described in paragraphs (c)(2)(i) and (ii) of this section.

(i) You must describe the actions taken during the event in a report delivered by facsimile, telephone, or other means to the Administrator within 2 working days after starting actions that are inconsistent with the plan.

(ii) You must submit a letter to the Administrator within 7 working days after the end of the event, unless you have made alternative arrangements with the Administrator as specified in § 63.10(d)(5)(ii). The letter must contain the information specified in § 63.10(d)(5)(ii).

(d) *Performance test reports.* On and after January 5, 2021, you must submit the results of the performance tests required in § 63.4560 following the procedure specified in paragraphs (d)(1) through (3) of this section.

(1) For data collected using test methods supported by the EPA's Electronic Reporting Tool (ERT) as listed on the EPA's ERT website (*https://www.epa.gov/electronic-reporting-air-emissions/electronic-reporting-tool-ert*) at the time of the test, you must submit the results of the performance test to the EPA via the Compliance and Emissions Data Reporting Interface (CEDRI). The CEDRI interface can be accessed through the EPA's Central Data Exchange (CDX) (*https://cdx.epa.gov/*). Performance test data must be submitted in a file format generated through the use of the EPA's ERT or an alternate electronic file format consistent with the extensible markup language (XML) schema listed on the EPA's ERT website.

(2) For data collected using test methods that are not supported by the EPA's ERT as listed on the EPA's ERT website at the time of the test, you must submit the results of the performance test to the Administrator at the appropriate address listed in § 63.13, unless the Administrator agrees to or specifies an alternate reporting method.

(3) If you claim that some of the performance test information being submitted under paragraph (d)(1) of this section is Confidential Business Information (CBI), you must submit a complete file generated through the use of the EPA's ERT or an alternate electronic file consistent with the XML schema listed on the EPA's ERT website, including information claimed to be CBI, on a compact disc, flash drive, or other commonly used electronic storage medium to the EPA. The electronic medium must be clearly marked as CBI and mailed to U.S. EPA/OAPQS/CORE CBI Office, Attention: Group Leader, Measurement Policy Group, MD C404–02, 4930 Old Page Rd., Durham, NC 27703. The same ERT or alternate file with the CBI omitted must be submitted to the EPA via the EPA's CDX as described in paragraph (d)(1) of this section.

sfrattini on LAPJZKW1R2 with $$_JOB
VerDate Sep<11>2014 09:16 Apr 04, 2023 Jkt 256165 PO 00000 Frm 00937 Fmt 8010 Sfmt 8010 Q:\40\256165.XXX PC31

(e) *Initial notification reports.* On and after January 5, 2021, the owner or operator shall submit the initial notifications required in § 63.9(b) and the notification of compliance status required in § 63.9(h) and § 63.4510(c) to the EPA via the CEDRI. The CEDRI interface can be accessed through the EPA's CDX (*https://cdx.epa.gov/*). The owner or operator must upload to CEDRI an electronic copy of each applicable notification in portable document format (PDF). The applicable notification must be submitted by the deadline specified in this subpart, regardless of the method in which the reports are submitted. Owners or operators who claim that some of the information required to be submitted via CEDRI is CBI shall submit a complete report generated using the appropriate form in CEDRI or an alternate electronic file consistent with the XML schema listed on the EPA's CEDRI website, including information claimed to be CBI, on a compact disc, flash drive, or other commonly used electronic storage medium to the EPA. The electronic medium shall be clearly marked as CBI and mailed to U.S. EPA/OAQPS/CORE CBI Office, Attention: Group Leader, Measurement Policy Group, MD C404–02, 4930 Old Page Rd., Durham, NC 27703. The same file with the CBI omitted shall be submitted to the EPA via the EPA's CDX as described earlier in this paragraph.

(f) *Semiannual compliance reports.* On and after January 5, 2021, or once the reporting template has been available on the CEDRI website for 1 year, whichever date is later, the owner or operator shall submit the semiannual compliance report required in paragraph (a) of this section to the EPA via the CEDRI. (CEDRI can be accessed through the EPA's CDX (*https://cdx.epa.gov/*)). The owner or operator must use the appropriate electronic template on the CEDRI website for this subpart or an alternate electronic file format consistent with the XML schema listed on the CEDRI website (*https://www.epa.gov/electronic-reporting-air-emissions/compliance-and-emissions-data-reporting-interface-cedri*). The date report templates become available will be listed on the CEDRI website. If the reporting form for the semiannual compliance report specific to this subpart is not available in CEDRI at the time that the report is due, you must submit the report to the Administrator at the appropriate addresses listed in § 63.13. Once the form has been available in CEDRI for 1 year, you must begin submitting all subsequent reports via CEDRI. The reports must be submitted by the deadlines specified in this subpart, regardless of the method in which the reports are submitted. Owners or operators who claim that some of the information required to be submitted via CEDRI is CBI shall submit a complete report generated using the appropriate form in CEDRI or an alternate electronic file consistent with the XML schema listed on the EPA's CEDRI website, including information claimed to be CBI, on a compact disc, flash drive, or other commonly used electronic storage medium to the EPA. The electronic medium shall be clearly marked as CBI and mailed to U.S. EPA/OAQPS/CORE CBI Office, Attention: Group Leader, Measurement Policy Group, MD C404–02, 4930 Old Page Rd., Durham, NC 27703. The same file with the CBI omitted shall be submitted to the EPA via the EPA's CDX as described earlier in this paragraph.

(g) *Reporting during EPA system outages.* If you are required to electronically submit a report through the CEDRI in the EPA's CDX, and due to a planned or actual outage of either the EPA's CEDRI or CDX systems within the period of time beginning 5 business days prior to the date that the submission is due, you will be or are precluded from accessing CEDRI or CDX and submitting a required report within the time prescribed, you may assert a claim of the EPA system outage for failure to timely comply with the reporting requirement. You must submit notification to the Administrator in writing as soon as possible following the date you first knew, or through due diligence should have known, that the event may cause or caused a delay in reporting. You must provide to the Administrator a written description identifying the date, time and length of the outage; a rationale for attributing the

sfrattini on LAPJZKW1R2 with $$_JOB
VerDate Sep<11>2014 09:16 Apr 04, 2023 Jkt 256165 PO 00000 Frm 00938 Fmt 8010 Sfmt 8010 Q:\40\256165.XXX PC31

delay in reporting beyond the regulatory deadline to the EPA system outage; describe the measures taken or to be taken to minimize the delay in reporting; and identify a date by which you propose to report, or if you have already met the reporting requirement at the time of the notification, the date you reported. In any circumstance, the report must be submitted electronically as soon as possible after the outage is resolved. The decision to accept the claim of the EPA system outage and allow an extension to the reporting deadline is solely within the discretion of the Administrator.

(h) *Reporting during force majeure events.* If you are required to electronically submit a report through CEDRI in the EPA's CDX and a force majeure event is about to occur, occurs, or has occurred or there are lingering effects from such an event within the period of time beginning 5 business days prior to the date the submission is due, the owner or operator may assert a claim of force majeure for failure to timely comply with the reporting requirement. For the purposes of this section, a force majeure event is defined as an event that will be or has been caused by circumstances beyond the control of the affected facility, its contractors, or any entity controlled by the affected facility that prevents you from complying with the requirement to submit a report electronically within the time period prescribed. Examples of such events are acts of nature (*e.g.*, hurricanes, earthquakes, or floods), acts of war or terrorism, or equipment failure or safety hazard beyond the control of the affected facility (*e.g.*, large scale power outage). If you intend to assert a claim of force majeure, you must submit notification to the Administrator in writing as soon as possible following the date you first knew, or through due diligence should have known, that the event may cause or caused a delay in reporting. You must provide to the Administrator a written description of the force majeure event and a rationale for attributing the delay in reporting beyond the regulatory deadline to the force majeure event; describe the measures taken or to be taken to minimize the delay in reporting; and identify a date by which you propose to report, or if you have already met the reporting requirement at the time of the notification, the date you reported. In any circumstance, the reporting must occur as soon as possible after the force majeure event occurs. The decision to accept the claim of force majeure and allow an extension to the reporting deadline is solely within the discretion of the Administrator.

[69 FR 20990, Apr. 19, 2004, as amended at 85 FR 41150, July 8, 2020]

§ 63.4530 What records must I keep?

You must collect and keep records of the data and information specified in this section. Failure to collect and keep these records is a deviation from the applicable standard.

(a) A copy of each notification and report that you submitted to comply with this subpart, and the documentation supporting each notification and report. If you are using the predominant activity alternative under § 63.4490(c), you must keep records of the data and calculations used to determine the predominant activity. If you are using the facility-specific emission limit alternative under § 63.4490(c), you must keep records of the data used to calculate the facility-specific emission limit for the initial compliance demonstration. You must also keep records of any data used in each annual predominant activity determination and in the calculation of the facility-specific emission limit for each 12-month compliance period included in the semi-annual compliance reports.

(b) A current copy of information provided by materials suppliers or manufacturers, such as manufacturer's formulation data, or test data used to determine the mass fraction of organic HAP and density for each coating, thinner and/or other additive, and cleaning material, and the mass fraction of coating solids for each coating. If you conducted testing to determine mass fraction of organic HAP, density, or mass fraction of coating solids, you must keep a copy of the complete test report. If you use information provided to you by the manufacturer or supplier of the material that was based on testing, you must keep the summary sheet

sfrattini on LAPJZKW1R2 with $$_JOB
VerDate Sep<11>2014 09:16 Apr 04, 2023 Jkt 256165 PO 00000 Frm 00939 Fmt 8010 Sfmt 8010 Q:\40\256165.XXX PC31

of results provided to you by the manufacturer or supplier. You are not required to obtain the test report or other supporting documentation from the manufacturer or supplier.

(c) For each compliance period, the records specified in paragraphs (c)(1) through (4) of this section.

(1) A record of the coating operations on which you used each compliance option and the time periods (beginning and ending dates and times) for each option you used.

(2) For the compliant material option, a record of the calculation of the organic HAP content for each coating, using Equation 1 of § 63.4541.

(3) For the emission rate without add-on controls option, a record of the calculation of the total mass of organic HAP emissions for the coatings, thinners and/or other additives, and cleaning materials used each month using Equations 1, 1A through 1C, and 2 of § 63.4551 and, if applicable, the calculation used to determine mass of organic HAP in waste materials according to § 63.4551(e)(4); the calculation of the total mass of coating solids used each month using Equation 2 of § 63.4551; and the calculation of each 12-month organic HAP emission rate using Equation 3 of § 63.4551.

(4) For the emission rate with add-on controls option, records of the calculations specified in paragraphs (c)(4)(i) through (v) of this section.

(i) The calculation of the total mass of organic HAP emissions for the coatings, thinners and/or other additives, and cleaning materials used each month using Equations 1 and 1A through 1C of § 63.4551; and, if applicable, the calculation used to determine mass of organic HAP in waste materials according to § 63.4551(e)(4);

(ii) The calculation of the total mass of coating solids used each month using Equation 2 of § 63.4551;

(iii) The calculation of the mass of organic HAP emission reduction by emission capture systems and add-on control devices using Equations 1 and 1A through 1D of § 63.4561 and Equations 2, 3, and 3A through 3C of § 63.4561, as applicable;

(iv) The calculation of each month's organic HAP emission rate using Equation 4 of § 63.4561; and

(v) The calculation of each 12-month organic HAP emission rate using Equation 5 of § 63.4561.

(d) A record of the name and mass of each coating, thinner and/or other additive, and cleaning material used during each compliance period. If you are using the compliant material option for all coatings at the source, you may maintain purchase records for each material used rather than a record of the mass used.

(e) A record of the mass fraction of organic HAP for each coating, thinner and/or other additive, and cleaning material used during each compliance period.

(f) A record of the mass fraction of coating solids for each coating used during each compliance period.

(g) If you use an allowance in Equation 1 of § 63.4551 for organic HAP contained in waste materials sent to or designated for shipment to a treatment, storage, and disposal facility (TSDF) according to § 63.4551(e)(4), you must keep records of the information specified in paragraphs (g)(1) through (3) of this section.

(1) The name and address of each TSDF to which you sent waste materials for which you use an allowance in Equation 1 of § 63.4551, a statement of which subparts under 40 CFR parts 262, 264, 265, and 266 apply to the facility; and the date of each shipment.

(2) Identification of the coating operations producing waste materials included in each shipment and the month or months in which you used the allowance for these materials in Equation 1 of § 63.4551.

(3) The methodology used in accordance with § 63.4551(e)(4) to determine the total amount of waste materials sent to or the amount collected, stored, and designated for transport to a TSDF each month; and the methodology to determine the mass of organic HAP contained in these waste materials. This must include the sources for all data used in the determination, methods used to generate the data, frequency of testing or monitoring, and supporting calculations and documentation, including the waste manifest for each shipment.

sfrattini on LAPJZKW1R2 with $$_JOB
VerDate Sep<11>2014 09:16 Apr 04, 2023 Jkt 256165 PO 00000 Frm 00940 Fmt 8010 Sfmt 8010 Q:\40\256165.XXX PC31

(h) Before January 5, 2021, you must keep records of the date, time, and duration of each deviation. On and after January 5, 2021, for each deviation from an emission limitation reported under §63.4520(a)(5) through (7), a record of the information specified in paragraphs (h)(1) through (4) of this section, as applicable.

(1) The date, time, and duration of the deviation, as reported under §63.4520(a)(5) through (7).

(2) A list of the affected sources or equipment for which the deviation occurred and the cause of the deviation, as reported under §63.4520(a)(5) through (7).

(3) An estimate of the quantity of each regulated pollutant emitted over any applicable emission limit in §63.4490 or any applicable operating limit in Table 1 to this subpart, and a description of the method used to calculate the estimate, as reported under §63.4520(a)(5) through (7).

(4) A record of actions taken to minimize emissions in accordance with §63.4500(b) and any corrective actions taken to return the affected unit to its normal or usual manner of operation.

(i) If you use the emission rate with add-on controls option, you must also keep the records specified in paragraphs (i)(1) through (8) of this section.

(1) Before January 5, 2021, for each deviation, a record of whether the deviation occurred during a period of SSM. On and after January 5, 2021, a record of whether the deviation occurred during a period of SSM is not required.

(2) Before January 5, 2021, the records in §63.6(e)(3)(iii) through (v) related to SSM. On and after January 5, 2021, the records in §63.6(e)(3)(iii) through (v) related to SSM are not required.

(3) The records required to show continuous compliance with each operating limit specified in Table 1 to this subpart that applies to you.

(4) For each capture system that is a PTE, the data and documentation you used to support a determination that the capture system meets the criteria in Method 204 of appendix M to 40 CFR part 51 for a PTE and has a capture efficiency of 100 percent, as specified in §63.4565(a).

(5) For each capture system that is not a PTE, the data and documentation you used to determine capture efficiency according to the requirements specified in §§63.4564 and 63.4565(b) through (e), including the records specified in paragraphs (i)(5)(i) through (iii) of this section that apply to you.

(i) *Records for a liquid-to-uncaptured gas protocol using a temporary total enclosure or building enclosure.* Records of the mass of total volatile hydrocarbon (TVH) as measured by Method 204A or 204F of appendix M to 40 CFR part 51 for each material used in the coating operation, and the total TVH for all materials used during each capture efficiency test run, including a copy of the test report. Records of the mass of TVH emissions not captured by the capture system that exited the temporary total enclosure or building enclosure during each capture efficiency test run, as measured by Method 204D or 204E of appendix M to 40 CFR part 51, including a copy of the test report. Records documenting that the enclosure used for the capture efficiency test met the criteria in Method 204 of appendix M to 40 CFR part 51 for either a temporary total enclosure or a building enclosure.

(ii) *Records for a gas-to-gas protocol using a temporary total enclosure or a building enclosure.* Records of the mass of TVH emissions captured by the emission capture system as measured by Method 204B or 204C of appendix M to 40 CFR part 51 at the inlet to the add-on control device, including a copy of the test report. Records of the mass of TVH emissions not captured by the capture system that exited the temporary total enclosure or building enclosure during each capture efficiency test run as measured by Method 204D or 204E of appendix M to 40 CFR part 51, including a copy of the test report. Records documenting that the enclosure used for the capture efficiency test met the criteria in Method 204 of appendix M to 40 CFR part 51 for either a temporary total enclosure or a building enclosure.

(iii) *Records for an alternative protocol.* Records needed to document a capture efficiency determination using an alternative method or protocol as specified in §63.4565(e), if applicable.

(6) The records specified in paragraphs (i)(6)(i) and (ii) of this section

sfrattini on LAPJZKW1R2 with $$_JOB
VerDate Sep<11>2014 09:16 Apr 04, 2023 Jkt 256165 PO 00000 Frm 00941 Fmt 8010 Sfmt 8010 Q:\40\256165.XXX PC31

for each add-on control device organic HAP destruction or removal efficiency determination as specified in § 63.4566.

(i) Records of each add-on control device performance test conducted according to §§ 63.4564 and 63.4566.

(ii) Records of the coating operation conditions during the add-on control device performance test showing that the performance test was conducted under representative operating conditions.

(7) Records of the data and calculations you used to establish the emission capture and add-on control device operating limits as specified in § 63.4567 and to document compliance with the operating limits as specified in Table 1 to this subpart.

(8) A record of the work practice plan required by § 63.4493 and documentation that you are implementing the plan on a continuous basis.

[69 FR 20990, Apr. 19, 2004, as amended at 85 FR 41152, July 8, 2020]

§ 63.4531 In what form and for how long must I keep my records?

(a) Your records must be in a form suitable and readily available for expeditious review, according to § 63.10(b)(1). Where appropriate, the records may be maintained as electronic spreadsheets or as a database. On and after January 5, 2021, any records required to be maintained by this subpart that are in reports that were submitted electronically via the EPA's CEDRI may be maintained in electronic format. This ability to maintain electronic copies does not affect the requirement for facilities to make records, data, and reports available upon request to a delegated air agency or the EPA as part of an on-site compliance evaluation.

(b) As specified in § 63.10(b)(1), you must keep each record for 5 years following the date of each occurrence, measurement, maintenance, corrective action, report, or record.

(c) You must keep each record on-site for at least 2 years after the date of each occurrence, measurement, maintenance, corrective action, report, or record according to § 63.10(b)(1). You may keep the records off-site for the remaining 3 years.

[69 FR 20990, Apr. 19, 2004, as amended at 85 FR 41153, July 8, 2020]

COMPLIANCE REQUIREMENTS FOR THE COMPLIANT MATERIAL OPTION

§ 63.4540 By what date must I conduct the initial compliance demonstration?

You must complete the initial compliance demonstration for the initial compliance period according to the requirements in § 63.4541. The initial compliance period begins on the applicable compliance date specified in § 63.4483 and ends on the last day of the 12th month following the compliance date. If the compliance date occurs on any day other than the first day of a month, then the initial compliance period extends through that month plus the next 12 months. The initial compliance demonstration includes the calculations according to § 63.4541 and supporting documentation showing that during the initial compliance period, you used no coating with an organic HAP content that exceeded the applicable emission limit in § 63.4490, and that you used no thinners and/or other additives, or cleaning materials that contained organic HAP as determined according to § 63.4541(a).

§ 63.4541 How do I demonstrate initial compliance with the emission limitations?

You may use the compliant material option for any individual coating operation, for any group of coating operations in the affected source, or for all the coating operations in the affected source. You must use either the emission rate without add-on controls option or the emission rate with add-on controls option for any coating operation in the affected source for which you do not use this option. To demonstrate initial compliance using the compliant material option, the coating operation or group of coating operations must use no coating with an organic HAP content that exceeds the applicable emission limits in § 63.4490 and

sfrattini on LAPJZKW1R2 with $$_JOB
VerDate Sep<11>2014 09:16 Apr 04, 2023 Jkt 256165 PO 00000 Frm 00942 Fmt 8010 Sfmt 8010 Q:\40\256165.XXX PC31

must use no thinner and/or other additive, or cleaning material that contains organic HAP as determined according to this section. Any coating operation for which you use the compliant material option is not required to meet the operating limits or work practice standards required in §§63.4492 and 63.4493, respectively. You must conduct a separate initial compliance demonstration for each general use coating, TPO coating, automotive lamp coating, and assembled on-road vehicle coating affected source unless you are demonstrating compliance with a predominant activity or facility-specific emission limit as provided in §63.4490(c). If you are demonstrating compliance with a predominant activity or facility-specific emission limit as provided in §63.4490(c), you must demonstrate that all coating operations included in the predominant activity determination or calculation of the facility-specific emission limit comply with that limit. You must meet all the requirements of this section. Use the procedures in this section on each coating, thinner and/or other additive, and cleaning material in the condition it is in when it is received from its manufacturer or supplier and prior to any alteration. You do not need to redetermine the organic HAP content of coatings, thinners and/or other additives, and cleaning materials that are reclaimed on-site (or reclaimed off-site if you have documentation showing that you received back the exact same materials that were sent off-site) and reused in the coating operation for which you use the compliant material option, provided these materials in their condition as received were demonstrated to comply with the compliant material option.

(a) *Determine the mass fraction of organic HAP for each material used.* You must determine the mass fraction of organic HAP for each coating, thinner and/or other additive, and cleaning material used during the compliance period by using one of the options in paragraphs (a)(1) through (5) of this section.

(1) *Method 311 (appendix A to 40 CFR part 63).* You may use Method 311 for determining the mass fraction of organic HAP. Use the procedures specified in paragraphs (a)(1)(i) and (ii) of this section when performing a Method 311 test.

(i) Count each organic HAP in Table 5 to this subpart that is measured to be present at 0.1 percent by mass or more and at 1.0 percent by mass or more for other compounds. For example, if toluene (not listed in Table 5 to this subpart) is measured to be 0.5 percent of the material by mass, you do not have to count it. Express the mass fraction of each organic HAP you count as a value truncated to four places after the decimal point (*e.g.*, 0.3791).

(ii) Calculate the total mass fraction of organic HAP in the test material by adding up the individual organic HAP mass fractions and truncating the result to three places after the decimal point (*e.g.*, 0.763).

(2) *EPA Method 24 (appendix A–7 to 40 CFR part 60).* For coatings, you may use EPA Method 24 to determine the mass fraction of nonaqueous volatile matter and use that value as a substitute for mass fraction of organic HAP. As an alternative to using EPA Method 24, you may use ASTM D2369–10 (Reapproved 2015)[e] (incorporated by reference, *see* §63.14). For reactive adhesives in which some of the HAP react to form solids and are not emitted to the atmosphere, you may use the alternative method contained in appendix A to this subpart, rather than EPA Method 24. You may use the volatile fraction that is emitted, as measured by the alternative method in appendix A to this subpart, as a substitute for the mass fraction of organic HAP.

(3) *Alternative method.* You may use an alternative test method for determining the mass fraction of organic HAP once the Administrator has approved it. You must follow the procedure in §63.7(f) to submit an alternative test method for approval.

(4) *Information from the supplier or manufacturer of the material.* You may rely on information other than that generated by the test methods specified in paragraphs (a)(1) through (3) of this section, such as manufacturer's formulation data, if it represents each organic HAP in Table 5 to this subpart that is present at 0.1 percent by mass or more and at 1.0 percent by mass or

sfrattini on LAPJZKW1R2 with $$_JOB
VerDate Sep<11>2014 09:16 Apr 04, 2023 Jkt 256165 PO 00000 Frm 00943 Fmt 8010 Sfmt 8010 Q:\40\256165.XXX PC31

more for other compounds. For example, if toluene (not listed in Table 5 to this subpart) is 0.5 percent of the material by mass, you do not have to count it. For reactive adhesives in which some of the HAP react to form solids and are not emitted to the atmosphere, you may rely on manufacturer's data that expressly states the organic HAP or volatile matter mass fraction emitted. If there is a disagreement between such information and results of a test conducted according to paragraphs (a)(1) through (3) of this section, then the test method results will take precedence unless, after consultation you demonstrate to the satisfaction of the enforcement agency that the formulation data are correct.

(5) *Solvent blends.* Solvent blends may be listed as single components for some materials in data provided by manufacturers or suppliers. Solvent blends may contain organic HAP which must be counted toward the total organic HAP mass fraction of the materials. When test data and manufacturer's data for solvent blends are not available, you may use the default values for the mass fraction of organic HAP in these solvent blends listed in Table 3 or 4 to this subpart. If you use the tables, you must use the values in Table 3 for all solvent blends that match Table 3 entries according to the instructions for Table 3, and you may use Table 4 only if the solvent blends in the materials you use do not match any of the solvent blends in Table 3 and you know only whether the blend is aliphatic or aromatic. However, if the results of a Method 311 (appendix A to 40 CFR part 63) test indicate higher values than those listed on Table 3 or 4 to this subpart, the Method 311 results will take precedence unless, after consultation you demonstrate to the satisfaction of the enforcement agency that the formulation data are correct.

(b) *Determine the mass fraction of coating solids for each coating.* You must determine the mass fraction of coating solids (kg (lb) of coating solids per kg (lb) of coating) for each coating used during the compliance period by a test, by information provided by the supplier or the manufacturer of the material, or by calculation, as specified in paragraphs (b)(1) through (3) of this section.

(1) *Method 24 (appendix A to 40 CFR part 60).* Use Method 24 for determining the mass fraction of coating solids. For reactive adhesives in which some of the liquid fraction reacts to form solids, you may use the alternative method contained in appendix A to this subpart, rather than Method 24, to determine the mass fraction of coating solids.

(2) *Alternative method.* You may use an alternative test method for determining the solids content of each coating once the Administrator has approved it. You must follow the procedure in § 63.7(f) to submit an alternative test method for approval.

(3) *Information from the supplier or manufacturer of the material.* You may obtain the mass fraction of coating solids for each coating from the supplier or manufacturer. If there is disagreement between such information and the test method results, then the test method results will take precedence unless, after consultation you demonstrate to the satisfaction of the enforcement agency that the formulation data are correct.

(c) *Calculate the organic HAP content of each coating.* Calculate the organic HAP content, kg (lb) organic HAP emitted per kg (lb) coating solids used, of each coating used during the compliance period using Equation 1 of this section:

$$H_c = \frac{W_c}{S_c} \qquad \text{(Eq. 1)}$$

Where:

H_c = Organic HAP content of the coating, kg (lb) of organic HAP emitted per kg (lb) coating solids used.

W_c = Mass fraction of organic HAP in the coating, kg organic HAP per kg coating, determined according to paragraph (a) of this section.

S_c = Mass fraction of coating solids, kg coating solids per kg coating, determined according to paragraph (b) of this section.

(d) *Compliance demonstration.* The calculated organic HAP content for each coating used during the initial compliance period must be less than or equal to the applicable emission limit in § 63.4490; and each thinner and/or other additive, and cleaning material used

sfrattini on LAPJZKW1R2 with $$_JOB
VerDate Sep<11>2014 09:16 Apr 04, 2023 Jkt 256165 PO 00000 Frm 00944 Fmt 8010 Sfmt 8010 Q:\40\256165.XXX PC31
ER19AP04.003</MATH>

during the initial compliance period must contain no organic HAP, determined according to paragraph (a) of this section. You must keep all records required by §§ 63.4530 and 63.4531. As part of the notification of compliance status required in § 63.4510, you must identify the coating operation(s) for which you used the compliant material option and submit a statement that the coating operation(s) was (were) in compliance with the emission limitations during the initial compliance period because you used no coatings for which the organic HAP content exceeded the applicable emission limit in § 63.4490, and you used no thinners and/or other additives, or cleaning materials that contained organic HAP, determined according to the procedures in paragraph (a) of this section.

[69 FR 20990, Apr. 19, 2004, as amended at 85 FR 41153, July 8, 2020]

§ 63.4542 How do I demonstrate continuous compliance with the emission limitations?

(a) For each compliance period to demonstrate continuous compliance, you must use no coating for which the organic HAP content (determined using Equation 1 of § 63.4541) exceeds the applicable emission limit in § 63.4490, and use no thinner and/or other additive, or cleaning material that contains organic HAP, determined according to § 63.4541(a). A compliance period consists of 12 months. Each month, after the end of the initial compliance period described in § 63.4540, is the end of a compliance period consisting of that month and the preceding 11 months. If you are complying with a facility-specific emission limit under § 63.4490(c), you must also perform the calculation using Equation 1 in § 63.4490(c)(2) on a monthly basis using the data from the previous 12 months of operation.

(b) If you choose to comply with the emission limitations by using the compliant material option, the use of any coating, thinner and/or other additive, or cleaning material that does not meet the criteria specified in paragraph (a) of this section is a deviation from the emission limitations that must be reported as specified in §§ 63.4510(c)(6) and 63.4520(a)(5).

(c) As part of each semiannual compliance report required by § 63.4520, you must identify the coating operation(s) for which you used the compliant material option. If there were no deviations from the applicable emission limit in § 63.4490, submit a statement that the coating operation(s) was (were) in compliance with the emission limitations during the reporting period because you used no coatings for which the organic HAP content exceeded the applicable emission limit in § 63.4490, and you used no thinner and/or other additive, or cleaning material that contained organic HAP, determined according to § 63.4541(a).

(d) You must maintain records as specified in §§ 63.4530 and 63.4531.

Compliance Requirements for the Emission Rate Without Add-On Controls Option

§ 63.4550 By what date must I conduct the initial compliance demonstration?

You must complete the initial compliance demonstration for the initial compliance period according to the requirements of § 63.4551. The initial compliance period begins on the applicable compliance date specified in § 63.4483 and ends on the last day of the 12th month following the compliance date. If the compliance date occurs on any day other than the first day of a month, then the initial compliance period extends through the end of that month plus the next 12 months. You must determine the mass of organic HAP emissions and mass of coating solids used each month and then calculate an organic HAP emission rate at the end of the initial compliance period. The initial compliance demonstration includes the calculations according to § 63.4551 and supporting documentation showing that during the initial compliance period the organic HAP emission rate was equal to or less than the applicable emission limit in § 63.4490.

§ 63.4551 How do I demonstrate initial compliance with the emission limitations?

You may use the emission rate without add-on controls option for any individual coating operation, for any group of coating operations in the affected

sfrattini on LAPJZKW1R2 with $$_JOB
VerDate Sep<11>2014 09:16 Apr 04, 2023 Jkt 256165 PO 00000 Frm 00945 Fmt 8010 Sfmt 8010 Q:\40\256165.XXX PC31

source, or for all the coating operations in the affected source. You must use either the compliant material option or the emission rate with add-on controls option for any coating operation in the affected source for which you do not use this option. To demonstrate initial compliance using the emission rate without add-on controls option, the coating operation or group of coating operations must meet the applicable emission limit in § 63.4490, but is not required to meet the operating limits or work practice standards in §§ 63.4492 and 63.4493, respectively. You must conduct a separate initial compliance demonstration for each general use, TPO, automotive lamp, and assembled on-road vehicle coating operation unless you are demonstrating compliance with a predominant activity or facility-specific emission limit as provided in § 63.4490(c). If you are demonstrating compliance with a predominant activity or facility-specific emission limit as provided in § 63.4490(c), you must demonstrate that all coating operations included in the predominant activity determination or calculation of the facility-specific emission limit comply with that limit. You must meet all the requirements of this section. When calculating the organic HAP emission rate according to this section, do not include any coatings, thinners and/or other additives, or cleaning materials used on coating operations for which you use the compliant material option or the emission rate with add-on controls option. You do not need to redetermine the mass of organic HAP in coatings, thinners and/or other additives, or cleaning materials that have been reclaimed on-site (or reclaimed off-site if you have documentation showing that you received back the exact same materials that were sent off-site) and reused in the coating operation for which you use the emission rate without add-on controls option. If you use coatings, thinners and/or other additives, or cleaning materials that have been reclaimed on-site, the amount of each used in a month may be reduced by the amount of each that is reclaimed. That is, the amount used may be calculated as the amount consumed to account for materials that are reclaimed.

(a) *Determine the mass fraction of organic HAP for each material.* Determine the mass fraction of organic HAP for each coating, thinner and/or other additive, and cleaning material used during each month according to the requirements in § 63.4541(a).

(b) *Determine the mass fraction of coating solids.* Determine the mass fraction of coating solids (kg (lb) of coating solids per kg (lb) of coating) for each coating used during each month according to the requirements in § 63.4541(b).

(c) *Determine the density of each material.* Determine the density of each liquid coating, thinner and/or other additive, and cleaning material used during each month from test results using ASTM D1475–13 or ASTM D2111–10 (Reapproved 2015) (both incorporated by reference, *see* § 63.14), information from the supplier or manufacturer of the material, or reference sources providing density or specific gravity data for pure materials. If there is disagreement between ASTM D1475–13 or ASTM D2111–10 (Reapproved 2015) and other such information sources, the test results will take precedence unless, after consultation you demonstrate to the satisfaction of the enforcement agency that the formulation data are correct. If you purchase materials or monitor consumption by weight instead of volume, you do not need to determine material density. Instead, you may use the material weight in place of the combined terms for density and volume in Equations 1A, 1B, 1C, and 2 of this section.

(d) *Determine the volume of each material used.* Determine the volume (liters) of each coating, thinner and/or other additive, and cleaning material used during each month by measurement or usage records. If you purchase materials or monitor consumption by weight instead of volume, you do not need to determine the volume of each material used. Instead, you may use the material weight in place of the combined terms for density and volume in Equations 1A, 1B, 1C, and 2 of this section.

(e) *Calculate the mass of organic HAP emissions.* The mass of organic HAP emissions is the combined mass of organic HAP contained in all coatings, thinners and/or other additives, and

sfrattini on LAPJZKW1R2 with $$_JOB
VerDate Sep<11>2014 09:16 Apr 04, 2023 Jkt 256165 PO 00000 Frm 00946 Fmt 8010 Sfmt 8010 Q:\40\256165.XXX PC31

cleaning materials used during each month minus the organic HAP in certain waste materials. Calculate the mass of organic HAP emissions using Equation 1 of this section.

$$H_e = A + B + C - R_w \qquad \text{(Eq. 1)}$$

Where:

H_e = Total mass of organic HAP emissions during the month, kg.

A = Total mass of organic HAP in the coatings used during the month, kg, as calculated in Equation 1A of this section.

B = Total mass of organic HAP in the thinners and/or other additives used during the month, kg, as calculated in Equation 1B of this section.

C = Total mass of organic HAP in the cleaning materials used during the month, kg, as calculated in Equation 1C of this section.

R_w = Total mass of organic HAP in waste materials sent or designated for shipment to a hazardous waste TSDF for treatment or disposal during the month, kg, determined according to paragraph (e)(4) of this section. (You may assign a value of zero to R_w if you do not wish to use this allowance.)

(1) Calculate the kg organic HAP in the coatings used during the month using Equation 1A of this section:

$$A = \sum_{i=1}^{m} \left(Vol_{c,i}\right)\left(D_{c,i}\right)\left(W_{c,i}\right) \qquad \text{(Eq. 1A)}$$

Where:

A = Total mass of organic HAP in the coatings used during the month, kg.

$Vol_{c,i}$ = Total volume of coating, i, used during the month, liters.

$D_{c,i}$ = Density of coating, i, kg coating per liter coating.

$W_{c,i}$ = Mass fraction of organic HAP in coating, i, kg organic HAP per kg coating. For reactive adhesives as defined in §63.4581, use the mass fraction of organic HAP that is emitted as determined using the method in appendix A to this subpart.

m = Number of different coatings used during the month.

(2) Calculate the kg of organic HAP in the thinners and/or other additives used during the month using Equation 1B of this section:

$$B = \sum_{j=1}^{n} \left(Vol_{t,j}\right)\left(D_{t,j}\right)\left(W_{t,j}\right) \qquad \text{(Eq. 1B)}$$

Where:

B = Total mass of organic HAP in the thinners and/or other additives used during the month, kg.

$Vol_{t,j}$ = Total volume of thinner and/or other additive, j, used during the month, liters.

$D_{t,j}$ = Density of thinner and/or other additive, j, kg per liter.

$W_{t,j}$ = Mass fraction of organic HAP in thinner and/or other additive, j, kg organic HAP per kg thinner and/or other additive. For reactive adhesives as defined in §63.4581, use the mass fraction of organic HAP that is emitted as determined using the method in appendix A to this subpart.

n = Number of different thinners and/or other additives used during the month.

(3) Calculate the kg organic HAP in the cleaning materials used during the month using Equation 1C of this section:

$$C = \sum_{k=1}^{p} \left(Vol_{s,k}\right)\left(D_{s,k}\right)\left(W_{s,k}\right) \qquad \text{(Eq. 1C)}$$

Where:

C = Total mass of organic HAP in the cleaning materials used during the month, kg.

$Vol_{s,k}$ = Total volume of cleaning material, k, used during the month, liters.

$D_{s,k}$ = Density of cleaning material, k, kg per liter.

$W_{s,k}$ = Mass fraction of organic HAP in cleaning material, k, kg organic HAP per kg material.

p = Number of different cleaning materials used during the month.

(4) If you choose to account for the mass of organic HAP contained in waste materials sent or designated for shipment to a hazardous waste TSDF in Equation 1 of this section, then you must determine the mass according to paragraphs (e)(4)(i) through (iv) of this section.

(i) You may only include waste materials in the determination that are generated by coating operations in the affected source for which you use Equation 1 of this section and that will be treated or disposed of by a facility that is regulated as a TSDF under 40 CFR part 262, 264, 265, or 266. The TSDF may be either off-site or on-site. You may not include organic HAP contained in wastewater.

(ii) You must determine either the amount of the waste materials sent to a TSDF during the month or the amount collected and stored during the

sfrattini on LAPJZKW1R2 with $$_JOB
VerDate Sep<11>2014 09:16 Apr 04, 2023 Jkt 256165 PO 00000 Frm 00947 Fmt 8010 Sfmt 8010 Q:\40\256165.XXX PC31
ER19AP04.004</MATH> ER19AP04.005</MATH> ER19AP04.006</MATH> ER19AP04.007</MATH>

month and designated for future transport to a TSDF. Do not include in your determination any waste materials sent to a TSDF during a month if you have already included them in the amount collected and stored during that month or a previous month.

(iii) Determine the total mass of organic HAP contained in the waste materials specified in paragraph (e)(4)(ii) of this section.

(iv) You must document the methodology you use to determine the amount of waste materials and the total mass of organic HAP they contain, as required in § 63.4530(g). If waste manifests include this information, they may be used as part of the documentation of the amount of waste materials and mass of organic HAP contained in them.

(f) *Calculate the total mass of coating solids used.* Determine the total mass of coating solids used, kg, which is the combined mass of coating solids for all the coatings used during each month, using Equation 2 of this section:

$$M_{st} = \sum_{i=1}^{m} \left(Vol_{c,i}\right)\left(D_{c,i}\right)\left(M_{s,i}\right) \qquad \text{(Eq. 2)}$$

Where:

M_{st} = Total mass of coating solids used during the month, kg.

$Vol_{c,i}$ = Total volume of coating, i, used during the month, liters.

$D_{c,i}$ = Density of coating, i, kgs per liter coating, determined according to § 63.4551(c).

$M_{s,i}$ = Mass fraction of coating solids for coating, i, kgs solids per kg coating, determined according to § 63.4541(b).

m = Number of coatings used during the month.

(g) *Calculate the organic HAP emission rate.* Calculate the organic HAP emission rate for the compliance period, kg (lb) organic HAP emitted per kg (lb) coating solids used, using Equation 3 of this section:

$$H_{yr} = \frac{\sum_{y=1}^{n} H_e}{\sum_{y=1}^{n} M_{st}} \qquad \text{(Eq. 3)}$$

Where:

H_{yr} = Average organic HAP emission rate for the compliance period, kg organic HAP emitted per kg coating solids used.

H_e = Total mass of organic HAP emissions from all materials used during month, y, kg, as calculated by Equation 1 of this section.

M_{st} = Total mass of coating solids used during month, y, kg, as calculated by Equation 2 of this section.

y = Identifier for months.

n = Number of full or partial months in the compliance period (for the initial compliance period, n equals 12 if the compliance date falls on the first day of a month; otherwise n equals 13; for all following compliance periods, n equals 12).

(h) *Compliance demonstration.* The organic HAP emission rate for the initial compliance period calculated using Equation 3 of this section must be less than or equal to the applicable emission limit for each subcategory in § 63.4490 or the predominant activity or facility-specific emission limit allowed in § 63.4490(c). You must keep all records as required by §§ 63.4530 and 63.4531. As part of the notification of compliance status required by § 63.4510, you must identify the coating operation(s) for which you used the emission rate without add-on controls option and submit a statement that the coating operation(s) was (were) in compliance with the emission limitations during the initial compliance period because the organic HAP emission rate was less than or equal to the applicable emission limit in § 63.4490, determined according to the procedures in this section.

[69 FR 20990, Apr. 19, 2004, as amended at 85 FR 41153, July 8, 2020]

§ 63.4552 How do I demonstrate continuous compliance with the emission limitations?

(a) To demonstrate continuous compliance, the organic HAP emission rate for each compliance period, determined according to § 63.4551(a) through (g), must be less than or equal to the applicable emission limit in § 63.4490. A compliance period consists of 12 months. Each month after the end of the initial compliance period described in § 63.4550 is the end of a compliance period consisting of that month and the preceding 11 months. You must perform the calculations in § 63.4551(a) through

sfrattini on LAPJZKW1R2 with $$_JOB
VerDate Sep<11>2014 09:16 Apr 04, 2023 Jkt 256165 PO 00000 Frm 00948 Fmt 8010 Sfmt 8010 Q:\40\256165.XXX PC31
ER19AP04.008</MATH> ER19AP04.008</MATH>

(g) on a monthly basis using data from the previous 12 months of operation. If you are complying with a facility-specific emission limit under § 63.4490(c), you must also perform the calculation using Equation 1 in § 63.4490(c)(2) on a monthly basis using the data from the previous 12 months of operation.

(b) If the organic HAP emission rate for any 12-month compliance period exceeded the applicable emission limit in § 63.4490, this is a deviation from the emission limitation for that compliance period and must be reported as specified in §§ 63.4510(c)(6) and 63.4520(a)(6).

(c) As part of each semiannual compliance report required by § 63.4520, you must identify the coating operation(s) for which you used the emission rate without add-on controls option. If there were no deviations from the emission limitations, you must submit a statement that the coating operation(s) was (were) in compliance with the emission limitations during the reporting period because the organic HAP emission rate for each compliance period was less than or equal to the applicable emission limit in § 63.4490, determined according to § 63.4551(a) through (g).

(d) You must maintain records as specified in §§ 63.4530 and 63.4531.

COMPLIANCE REQUIREMENTS FOR THE EMISSION RATE WITH ADD-ON CONTROLS OPTION

§ 63.4560 By what date must I conduct performance tests and initial compliance demonstrations?

(a) *New and reconstructed affected sources.* For a new or reconstructed affected source, you must meet the requirements of paragraphs (a)(1) through (4) of this section.

(1) All emission capture systems, add-on control devices, and CPMS must be installed and operating no later than the applicable compliance date specified in § 63.4483. Except for solvent recovery systems for which you conduct liquid-liquid material balances according to § 63.4561(j), you must conduct according to the schedule in paragraphs (a)(1)(i) and (ii) of this section initial and periodic performance tests of each capture system and add-on control device according to the procedures in §§ 63.4564, 63.4565, and 63.4566 and establish the operating limits required by § 63.4492. For a solvent recovery system for which you conduct liquid-liquid material balances according to § 63.4561(j), you must initiate the first material balance no later than the applicable compliance date specified in § 63.4483.

(i) You must conduct the initial performance test and establish the operating limits required by § 63.4492 no later than 180 days after the applicable compliance date specified in § 63.4483.

(ii) You must conduct periodic performance tests and establish the operating limits required by § 63.4492 within 5 years following the previous performance test. You must conduct the first periodic performance test before July 8, 2023, unless you are already required to complete periodic performance tests as a requirement of renewing your facility's operating permit under 40 CFR part 70 or 40 CFR part 71 and have conducted a performance test on or after July 8, 2018. Thereafter you must conduct a performance test no later than 5 years following the previous performance test. Operating limits must be confirmed or reestablished during each performance test. For any control device for which you are using the catalytic oxidizer control option at § 63.4567(b) and following the catalyst maintenance procedures in § 63.4567(b)(4), you are not required to conduct periodic control device performance testing as specified by this paragraph. For any control device for which instruments are used to continuously measure organic compound emissions, you are not required to conduct periodic control device performance testing as specified by this paragraph.

(2) You must develop and begin implementing the work practice plan required by § 63.4493 no later than the compliance date specified in § 63.4483.

(3) You must complete the initial compliance demonstration for the initial compliance period according to the requirements of § 63.4561. The initial compliance period begins on the applicable compliance date specified in § 63.4483 and ends on the last day of the 12th month following the compliance date. If the compliance date occurs on any day other than the first day of a

sfrattini on LAPJZKW1R2 with $$_JOB
VerDate Sep<11>2014 09:16 Apr 04, 2023 Jkt 256165 PO 00000 Frm 00949 Fmt 8010 Sfmt 8010 Q:\40\256165.XXX PC31

month, then the initial compliance period extends through the end of that month plus the next 12 months. You must determine the mass of organic HAP emissions and mass of coatings solids used each month and then calculate an organic HAP emission rate at the end of the initial compliance period. The initial compliance demonstration includes the results of emission capture system and add-on control device performance tests conducted according to §§ 63.4564, 63.4565, and 63.4566; results of liquid-liquid material balances conducted according to § 63.4561(j); calculations according to § 63.4561 and supporting documentation showing that during the initial compliance period the organic HAP emission rate was equal to or less than the applicable emission limit in § 63.4490; the operating limits established during the performance tests and the results of the continuous parameter monitoring required by § 63.4568; and documentation of whether you developed and implemented the work practice plan required by § 63.4493.

(4) For the initial compliance demonstration, you do not need to comply with the operating limits for the emission capture system and add-on control device required by § 63.4492 until after you have completed the initial performance tests specified in paragraph (a)(1) of this section. Instead, you must maintain a log detailing the operation and maintenance of the emission capture system, add-on control device, and continuous parameter monitors during the period between the compliance date and the performance test. You must begin complying with the operating limits established based on the initial performance tests specified in paragraph (a)(1) of this section for your affected source on the date you complete the performance tests. The requirements in this paragraph (a)(4) do not apply to solvent recovery systems for which you conduct liquid-liquid material balances according to the requirements in § 63.4561(j).

(b) *Existing affected sources.* For an existing affected source, you must meet the requirements of paragraphs (b)(1) through (3) of this section.

(1) All emission capture systems, add-on control devices, and CPMS must be installed and operating no later than the applicable compliance date specified in § 63.4483. Except for solvent recovery systems for which you conduct liquid-liquid material balances according to § 63.4561(j), you must conduct according to the schedule in paragraphs (b)(1)(i) and (ii) of this section initial and periodic performance tests of each capture system and add-on control device according to the procedures in §§ 63.4564, 63.4565, and 63.4566 and establish the operating limits required by § 63.4492. For a solvent recovery system for which you conduct liquid-liquid material balances according to § 63.4561(j), you must initiate the first material balance no later than the compliance date specified in § 63.4483.

(i) You must conduct the initial performance test and establish the operating limits required by § 63.4492 no later than 180 days after the applicable compliance date specified in § 63.4483.

(ii) You must conduct periodic performance tests and establish the operating limits required by § 63.4492 within 5 years following the previous performance test. You must conduct the first periodic performance test before July 8, 2023, unless you are already required to complete periodic performance tests as a requirement of renewing your facility's operating permit under 40 CFR part 70 or 40 CFR part 71 and have conducted a performance test on or after July 8, 2018. Thereafter you must conduct a performance test no later than 5 years following the previous performance test. Operating limits must be confirmed or reestablished during each performance test. For any control device for which you are using the catalytic oxidizer control option at § 63.4567(b) and following the catalyst maintenance procedures in § 63.4567(b)(4), you are not required to conduct periodic control device performance testing as specified by this paragraph. For any control device for which instruments are used to continuously measure organic compound emissions, you are not required to conduct periodic control device performance testing as specified by this paragraph.

(2) You must develop and begin implementing the work practice plan required by § 63.4493 no later than the compliance date specified in § 63.4483.

sfrattini on LAPJZKW1R2 with $$_JOB
VerDate Sep<11>2014 09:16 Apr 04, 2023 Jkt 256165 PO 00000 Frm 00950 Fmt 8010 Sfmt 8010 Q:\40\256165.XXX PC31

(3) You must complete the initial compliance demonstration for the initial compliance period according to the requirements of §63.4561. The initial compliance period begins on the applicable compliance date specified in §63.4483 and ends on the last day of the 12th month following the compliance date. If the compliance date occurs on any day other than the first day of a month, then the initial compliance period extends through the end of that month plus the next 12 months. You must determine the mass of organic HAP emissions and mass of coatings solids used each month and then calculate an organic HAP emission rate at the end of the initial compliance period. The initial compliance demonstration includes the results of emission capture system and add-on control device performance tests conducted according to §§63.4564, 63.4565, and 63.4566; results of liquid-liquid material balances conducted according to §63.4561(j); calculations according to §63.4561 and supporting documentation showing that during the initial compliance period the organic HAP emission rate was equal to or less than the applicable emission limit in §63.4490; the operating limits established during the performance tests and the results of the continuous parameter monitoring required by §63.4568; and documentation of whether you developed and implemented the work practice plan required by §63.4493.

(c) You are not required to conduct an initial performance test to determine capture efficiency or destruction efficiency of a capture system or control device if you receive approval to use the results of a performance test that has been previously conducted on that capture system or control device. Any such previous tests must meet the conditions described in paragraphs (c)(1) through (3) of this section. You are still required to conduct a periodic performance test according to the applicable requirements of paragraphs (a)(1)(ii) and (b)(2)(ii) of this section.

(1) The previous test must have been conducted using the methods and conditions specified in this subpart.

(2) Either no process or equipment changes must have been made since the previous test was performed, or the owner or operator must be able to demonstrate that the results of the performance test, with or without adjustments, reliably demonstrate compliance despite process or equipment changes.

(3) Either the required operating parameters were established in the previous test or sufficient data were collected in the previous test to establish the required operating parameters.

[69 FR 20990, Apr. 19, 2004, as amended at 85 FR 41153, July 8, 2020]

§63.4561 How do I demonstrate initial compliance?

(a) You may use the emission rate with add-on controls option for any coating operation, for any group of coating operations in the affected source, or for all of the coating operations in the affected source. You may include both controlled and uncontrolled coating operations in a group for which you use this option. You must use either the compliant material option or the emission rate without add-on controls option for any coating operation in the affected source for which you do not use the emission rate with add-on controls option. To demonstrate initial compliance, the coating operation(s) for which you use the emission rate with add-on controls option must meet the applicable emission limitations in §§63.4490, 63.4492, and 63.4493. You must conduct a separate initial compliance demonstration for each general use, TPO, automotive lamp, and assembled on-road vehicle coating operation, unless you are demonstrating compliance with a predominant activity or facility-specific emission limit as provided in §63.4490(c). If you are demonstrating compliance with a predominant activity or facility-specific emission limit as provided in §63.4490(c), you must demonstrate that all coating operations included in the predominant activity determination or calculation of the facility-specific emission limit comply with that limit. You must meet all the requirements of this section. When calculating the organic HAP emission rate according to this section, do not include any coatings, thinners and/or other additives, or cleaning materials used on coating operations for which you use

sfrattini on LAPJZKW1R2 with $$_JOB
VerDate Sep<11>2014 09:16 Apr 04, 2023 Jkt 256165 PO 00000 Frm 00951 Fmt 8010 Sfmt 8010 Q:\40\256165.XXX PC31

the compliant material option or the emission rate without add-on controls option. You do not need to redetermine the mass of organic HAP in coatings, thinners and/or other additives, or cleaning materials that have been reclaimed onsite (or reclaimed off-site if you have documentation showing that you received back the exact same materials that were sent off-site) and reused in the coatings operation(s) for which you use the emission rate with add-on controls option. If you use coatings, thinners and/or other additives, or cleaning materials that have been reclaimed on-site, the amount of each used in a month may be reduced by the amount of each that is reclaimed. That is, the amount used may be calculated as the amount consumed to account for materials that are reclaimed.

(b) *Compliance with operating limits.* Except as provided in § 63.4560(a)(4), and except for solvent recovery systems for which you conduct liquid-liquid material balances according to the requirements of paragraph (j) of this section, you must establish and demonstrate continuous compliance during the initial compliance period with the operating limits required by § 63.4492, using the procedures specified in §§ 63.4567 and 63.4568.

(c) *Compliance with work practice requirements.* You must develop, implement, and document your implementation of the work practice plan required by § 63.4493 during the initial compliance period, as specified in § 63.4530.

(d) *Compliance with emission limits.* You must follow the procedures in paragraphs (e) through (n) of this section to demonstrate compliance with the applicable emission limit in § 63.4490 for each affected source in each subcategory.

(e) *Determine the mass fraction of organic HAP, density, volume used, and mass fraction of coating solids.* Follow the procedures specified in § 63.4551(a) through (d) to determine the mass fraction of organic HAP, density, and volume of each coating, thinner and/or other additive, and cleaning material used during each month; and the mass fraction of coating solids for each coating used during each month.

(f) *Calculate the total mass of organic HAP emissions before add-on controls.* Using Equation 1 of § 63.4551, calculate the total mass of organic HAP emissions before add-on controls from all coatings, thinners and/or other additives, and cleaning materials used during each month in the coating operation or group of coating operations for which you use the emission rate with add-on controls option.

(g) *Calculate the organic HAP emission reduction for each controlled coating operation.* Determine the mass of organic HAP emissions reduced for each controlled coating operation during each month. The emission reduction determination quantifies the total organic HAP emissions that pass through the emission capture system and are destroyed or removed by the add-on control device. Use the procedures in paragraph (h) of this section to calculate the mass of organic HAP emission reduction for each controlled coating operation using an emission capture system and add-on control device other than a solvent recovery system for which you conduct liquid-liquid material balances. For each controlled coating operation using a solvent recovery system for which you conduct a liquid-liquid material balance, use the procedures in paragraph (j) of this section to calculate the organic HAP emission reduction.

(h) *Calculate the organic HAP emission reduction for each controlled coating operation not using liquid-liquid material balance.* Use Equation 1 of this section to calculate the organic HAP emission reduction for each controlled coating operation using an emission capture system and add-on control device other than a solvent recovery system for which you conduct liquid-liquid material balances. The calculation applies the emission capture system efficiency and add-on control device efficiency to the mass of organic HAP contained in the coatings, thinners and/or other additives, and cleaning materials that are used in the coating operation served by the emission capture system and add-on control device during each month. You must assume zero efficiency for the emission capture system and add-on control device for any period of time a deviation specified in § 63.4563(c) or (d) occurs in the controlled coating operation, including a deviation during a

sfrattini on LAPJZKW1R2 with $$_JOB
VerDate Sep<11>2014 09:16 Apr 04, 2023 Jkt 256165 PO 00000 Frm 00952 Fmt 8010 Sfmt 8010 Q:\40\256165.XXX PC31

period of startup, shutdown, or malfunction, unless you have other data indicating the actual efficiency of the emission capture system and add-on control device and the use of these data is approved by the Administrator. Equation 1 of this section treats the materials used during such a deviation as if they were used on an uncontrolled coating operation for the time period of the deviation.

$$H_C = \left(A_C + B_C + C_C - R_W - H_{UNC}\right)\left(\frac{CE}{100} \times \frac{DRE}{100}\right) \qquad \text{(Eq. 1)}$$

Where:

H_C = Mass of organic HAP emission reduction for the controlled coating operation during the month, kg.

A_C = Total mass of organic HAP in the coatings used in the controlled coating operation during the month, kg, as calculated in Equation 1A of this section.

B_C = Total mass of organic HAP in the thinners and/or other additives used in the controlled coating operation during the month, kg, as calculated in Equation 1B of this section.

C_C = Total mass of organic HAP in the cleaning materials used in the controlled coating operation during the month, kg, as calculated in Equation 1C of this section.

R_w = Total mass of organic HAP in waste materials sent or designated for shipment to a hazardous waste TSDF for treatment or disposal during the compliance period, kg, determined according to §63.4951(e)(4). (You may assign a value of zero to R_w if you do not wish to use this allowance.)

H_{UNC} = Total mass of organic HAP in the coatings, thinners and/or other additives, and cleaning materials used during all deviations specified in §63.4563(c) and (d) that occurred during the month in the controlled coating operation, kg, as calculated in Equation 1D of this section.

CE = Capture efficiency of the emission capture system vented to the add-on control device, percent. Use the test methods and procedures specified in §§63.4564 and 63.4565 to measure and record capture efficiency.

DRE = Organic HAP destruction or removal efficiency of the add-on control device, percent. Use the test methods and procedures in §§63.4564 and 63.4566 to measure and record the organic HAP destruction or removal efficiency.

(1) Calculate the mass of organic HAP in the coatings used in the controlled coating operation, kg (lb), using Equation 1A of this section:

$$A_C = \sum_{i=1}^{m}\left(Vol_{c,i}\right)\left(D_{c,i}\right)\left(W_{c,i}\right) \qquad \text{(Eq. 1A)}$$

Where:

A_C = Total mass of organic HAP in the coatings used in the controlled coating operation during the month, kg.

$Vol_{c,i}$ = Total volume of coating, i, used during the month, liters.

$D_{c,i}$ = Density of coating, i, kg per liter.

$W_{c,i}$ = Mass fraction of organic HAP in coating, i, kg per kg. For reactive adhesives as defined in §63.4581, use the mass fraction of organic HAP that is emitted as determined using the method in appendix A to this subpart.

m = Number of different coatings used.

(2) Calculate the mass of organic HAP in the thinners and/or other additives used in the controlled coating operation, kg (lb), using Equation 1B of this section:

$$B_C = \sum_{j=1}^{n}\left(Vol_{t,j}\right)\left(D_{t,j}\right)\left(W_{t,j}\right) \qquad \text{(Eq. 1B)}$$

Where:

B_C = Total mass of organic HAP in the thinners and/or other additives used in the controlled coating operation during the month, kg.

$Vol_{t,j}$ = Total volume of thinner and/or other additive, j, used during the month, liters.

$D_{t,j}$ = Density of thinner and/or other additive, j, kg per liter.

$W_{t,j}$ = Mass fraction of organic HAP in thinner and/or other additive, j, kg per kg. For reactive adhesives as defined in §63.4581, use the mass fraction of organic HAP that is emitted as determined using the method in appendix A to this subpart.

n = Number of different thinners and/or other additives used.

(3) Calculate the mass of organic HAP in the cleaning materials used in

sfrattini on LAPJZKW1R2 with $$_JOB
VerDate Sep<11>2014 09:16 Apr 04, 2023 Jkt 256165 PO 00000 Frm 00953 Fmt 8010 Sfmt 8010 Q:\40\256165.XXX PC31
ER19AP04.010</MATH> ER19AP04.011</MATH> ER19AP04.012</MATH>

the controlled coating operation during the month, kg (lb), using Equation 1C of this section:

$$C_C = \sum_{k=1}^{p} \left(Vol_{s,k}\right)\left(D_{s,k}\right)\left(W_{s,k}\right) \quad \text{(Eq. 1C)}$$

Where:

C_C = Total mass of organic HAP in the cleaning materials used in the controlled coating operation during the month, kg.

$Vol_{s,k}$ = Total volume of cleaning material, k, used during the month, liters.

$D_{s,k}$ = Density of cleaning material, k, kg per liter.

$W_{s,k}$ = Mass fraction of organic HAP in cleaning material, k, kg per kg.

p = Number of different cleaning materials used.

(4) Calculate the mass of organic HAP in the coatings, thinners and/or other additives, and cleaning materials used in the controlled coating operation during deviations specified in § 63.4563(c) and (d), using Equation 1D of this section:

$$H_{UNC} = \sum_{h=1}^{q} \left(Vol_h\right)\left(D_h\right)\left(W_h\right) \quad \text{(Eq. 1D)}$$

Where:

H_{UNC} = Total mass of organic HAP in the coatings, thinners and/or other additives, and cleaning materials used during all deviations specified in § 63.4563(c) and (d) that occurred during the month in the controlled coating operation, kg.

Vol_h = Total volume of coating, thinner and/or other additive, or cleaning material, h, used in the controlled coating operation during deviations, liters.

D_h = Density of coating, thinner and/or other additives, or cleaning material, h, kg per liter.

W_h = Mass fraction of organic HAP in coating, thinner and/or other additives, or cleaning material, h, kg organic HAP per kg coating. For reactive adhesives as defined in § 63.4581, use the mass fraction of organic HAP that is emitted as determined using the method in appendix A to this subpart.

q = Number of different coatings, thinners and/or other additives, and cleaning materials used.

(i) [Reserved]

(j) *Calculate the organic HAP emission reduction for each controlled coating operation using liquid-liquid material balances.* For each controlled coating operation using a solvent recovery system for which you conduct liquid-liquid material balances, calculate the organic HAP emission reduction by applying the volatile organic matter collection and recovery efficiency to the mass of organic HAP contained in the coatings, thinners and/or other additives, and cleaning materials that are used in the coating operation controlled by the solvent recovery system during each month. Perform a liquid-liquid material balance for each month as specified in paragraphs (j)(1) through (6) of this section. Calculate the mass of organic HAP emission reduction by the solvent recovery system as specified in paragraph (j)(7) of this section.

(1) For each solvent recovery system, install, calibrate, maintain, and operate according to the manufacturer's specifications, a device that indicates the cumulative amount of volatile organic matter recovered by the solvent recovery system each month. The device must be initially certified by the manufacturer to be accurate to within ±2.0 percent of the mass of volatile organic matter recovered.

(2) For each solvent recovery system, determine the mass of volatile organic matter recovered for the month, based on measurement with the device required in paragraph (j)(1) of this section.

(3) Determine the mass fraction of volatile organic matter for each coating, thinner and/or other additive, and cleaning material used in the coating operation controlled by the solvent recovery system during the month, kg volatile organic matter per kg coating. You may determine the volatile organic matter mass fraction using EPA Method 24 of 40 CFR part 60, appendix A–7, ASTM D2369–10 (Reapproved 2015)[e] (incorporated by reference, *see* § 63.14), or an EPA approved alternative method. Alternatively, you may determine the volatile organic matter mass fraction using information provided by the manufacturer or supplier of the coating. In the event of any inconsistency between information provided by the manufacturer or supplier and the results of EPA Method 24 of 40 CFR part 60, appendix A–7, ASTM D2369–10 (Reapproved 2015)[e], or an approved alternative method, the test method results

sfrattini on LAPJZKW1R2 with $$_JOB
VerDate Sep<11>2014 09:16 Apr 04, 2023 Jkt 256165 PO 00000 Frm 00954 Fmt 8010 Sfmt 8010 Q:\40\256165.XXX PC31
ER19AP04.013</MATH> ER19AP04.014</MATH>

will take precedence unless, after consultation you demonstrate to the satisfaction of the enforcement agency that the formulation data are correct.

(4) Determine the density of each coating, thinner and/or other additive, and cleaning material used in the coating operation controlled by the solvent recovery system during the month, kg per liter, according to §63.4551(c).

(5) Measure the volume of each coating, thinner and/or other additive, and cleaning material used in the coating operation controlled by the solvent recovery system during the month, liters.

(6) Each month, calculate the solvent recovery system's volatile organic matter collection and recovery efficiency, using Equation 2 of this section:

$$R_V = 100 \frac{M_{VR}}{\sum_{i=1}^{m} Vol_i D_i WV_{c,i} + \sum_{j=1}^{n} Vol_j D_j WV_{t,j} + \sum_{k=1}^{p} Vol_k D_k WV_{s,k}} \qquad \text{(Eq. 2)}$$

Where:

R_V = Volatile organic matter collection and recovery efficiency of the solvent recovery system during the month, percent.

M_{VR} = Mass of volatile organic matter recovered by the solvent recovery system during the month, kg.

Vol_i = Volume of coating, i, used in the coating operation controlled by the solvent recovery system during the month, liters.

D_i = Density of coating, i, kg per liter.

$WV_{c,i}$ = Mass fraction of volatile organic matter for coating, i, kg volatile organic matter per kg coating. For reactive adhesives as defined in §63.4581, use the mass fraction of organic HAP that is emitted as determined using the method in appendix A to this subpart.

Vol_j = Volume of thinner and/or other additive, j, used in the coating operation controlled by the solvent recovery system during the month, liters.

D_j = Density of thinner and/or other additive, j, kg per liter.

$WV_{t,j}$ = Mass fraction of volatile organic matter for thinner and/or other additive, j, kg volatile organic matter per kg thinner and/or other additive. For reactive adhesives as defined in §63.4581, use the mass fraction of organic HAP that is emitted as determined using the method in appendix A to this subpart.

Vol_k = Volume of cleaning material, k, used in the coating operation controlled by the solvent recovery system during the month, liters.

D_k = Density of cleaning material, k, kg per liter.

$WV_{s,k}$ = Mass fraction of volatile organic matter for cleaning material, k, kg volatile organic matter per kg cleaning material.

m = Number of different coatings used in the coating operation controlled by the solvent recovery system during the month.

n = Number of different thinners and/or other additives used in the coating operation controlled by the solvent recovery system during the month.

p = Number of different cleaning materials used in the coating operation controlled by the solvent recovery system during the month.

(7) Calculate the mass of organic HAP emission reduction for the coating operation controlled by the solvent recovery system during the month, using Equation 3 of this section and according to paragraphs (j)(7)(i) through (iii) of this section:

$$H_{CSR} = \left(A_{CSR} + B_{CSR} + C_{CSR}\right)\left(\frac{R_v}{100}\right) \qquad \text{(Eq. 3)}$$

Where:

H_{CSR} = Mass of organic HAP emission reduction for the coating operation controlled by the solvent recovery system using a liquid-liquid material balance during the month, kg.

sfrattini on LAPJZKW1R2 with $$_JOB
VerDate Sep<11>2014 09:16 Apr 04, 2023 Jkt 256165 PO 00000 Frm 00955 Fmt 8010 Sfmt 8010 Q:\40\256165.XXX PC31
ER19AP04.015</MATH> ER19AP04.016</MATH>

A_{CSR} = Total mass of organic HAP in the coatings used in the coating operation controlled by the solvent recovery system, kg, calculated using Equation 3A of this section.

B_{CSR} = Total mass of organic HAP in the thinners and/or other additives used in the coating operation controlled by the solvent recovery system, kg, calculated using Equation 3B of this section.

C_{CSR} = Total mass of organic HAP in the cleaning materials used in the coating operation controlled by the solvent recovery system, kg, calculated using Equation 3C of this section.

R_V = Volatile organic matter collection and recovery efficiency of the solvent recovery system, percent, from Equation 2 of this section.

(i) Calculate the mass of organic HAP in the coatings used in the coating operation controlled by the solvent recovery system, kg, using Equation 3A of this section.

$$A_{CSR} = \sum_{i=1}^{m} \left(Vol_{c,i}\right)\left(D_{c,i}\right)\left(W_{c,i}\right) \quad \text{(Eq. 3A)}$$

Where:

A_{CSR} = Total mass of organic HAP in the coatings used in the coating operation controlled by the solvent recovery system during the month, kg.

$Vol_{c,i}$ = Total volume of coating, i, used during the month in the coating operation controlled by the solvent recovery system, liters.

$D_{c,i}$ = Density of coating, i, kg per liter.

$W_{c,i}$ = Mass fraction of organic HAP in coating, i, kg organic HAP per kg coating. For reactive adhesives as defined in § 63.4581, use the mass fraction of organic HAP that is emitted as determined using the method in appendix A to this subpart.

m = Number of different coatings used.

(ii) Calculate the mass of organic HAP in the thinners and/or other additives used in the coating operation controlled by the solvent recovery system, kg, using Equation 3B of this section:

$$B_{CSR} = \sum_{j=1}^{n} \left(Vol_{t,j}\right)\left(D_{t,j}\right)\left(W_{t,j}\right) \quad \text{(Eq. 3B)}$$

Where:

B_{CSR} = Total mass of organic HAP in the thinners and/or other additives used in the coating operation controlled by the solvent recovery system during the month, kg.

$Vol_{t,j}$ = Total volume of thinner and/or other additive, j, used during the month in the coating operation controlled by the solvent recovery system, liters.

$D_{t,j}$ = Density of thinner and/or other additive, j, kg per liter.

$W_{t,j}$ = Mass fraction of organic HAP in thinner and/or other additive, j, kg organic HAP per kg thinner and/or other additive. For reactive adhesives as defined in § 63.4581, use the mass fraction of organic HAP that is emitted as determined using the method in appendix A to this subpart.

n = Number of different thinners and/or other additives used.

(iii) Calculate the mass of organic HAP in the cleaning materials used in the coating operation controlled by the solvent recovery system during the month, kg, using Equation 3C of this section:

$$C_{CSR} = \sum_{k=1}^{p} \left(Vol_{s,k}\right)\left(D_{s,k}\right)\left(W_{s,k}\right) \quad \text{(Eq. 3C)}$$

Where:

C_{CSR} = Total mass of organic HAP in the cleaning materials used in the coating operation controlled by the solvent recovery system during the month, kg.

$Vol_{s,k}$ = Total volume of cleaning material, k, used during the month in the coating operation controlled by the solvent recovery system, liters.

$D_{s,k}$ = Density of cleaning material, k, kg per liter.

$W_{s,k}$ = Mass fraction of organic HAP in cleaning material, k, kg organic HAP per kg cleaning material.

p = Number of different cleaning materials used.

(k) *Calculate the total mass of coating solids used.* Determine the total mass of coating solids used, kg, which is the combined mass of coating solids for all

sfrattini on LAPJZKW1R2 with $$_JOB
VerDate Sep<11>2014 09:16 Apr 04, 2023 Jkt 256165 PO 00000 Frm 00956 Fmt 8010 Sfmt 8010 Q:\40\256165.XXX PC31
ER19AP04.017</MATH> ER19AP04.018</MATH> ER19AP04.019</MATH>

the coatings used during each month in the coating operation or group of coating operations for which you use the emission rate with add-on controls option, using Equation 2 of §63.4551.

(l) *Calculate the mass of organic HAP emissions for each month.* Determine the mass of organic HAP emissions, kg, during each month, using Equation 4 of this section:

$$H_{HAP} = H_e - \sum_{i=1}^{q}\left(H_{C,i}\right) - \sum_{j=1}^{r}\left(H_{CSR,j}\right) \qquad \text{(Eq. 4)}$$

Where:

H_{HAP} = Total mass of organic HAP emissions for the month, kg.

H_e = Total mass of organic HAP emissions before add-on controls from all the coatings, thinners and/or other additives, and cleaning materials used during the month, kg, determined according to paragraph (f) of this section.

$H_{C,i}$ = Total mass of organic HAP emission reduction for controlled coating operation, i, not using a liquid-liquid material balance, during the month, kg, from Equation 1 of this section.

$H_{CSR,j}$ = Total mass of organic HAP emission reduction for coating operation, j, controlled by a solvent recovery system using a liquid-liquid material balance, during the month, kg, from Equation 3 of this section.

q = Number of controlled coating operations not controlled by a solvent recovery system using a liquid-liquid material balance.

r = Number of coating operations controlled by a solvent recovery system using a liquid-liquid material balance.

(m) *Calculate the organic HAP emission rate for the compliance period.* Determine the organic HAP emission rate for the compliance period, kg (lb) of organic HAP emitted per kg (lb) coating solids used, using Equation 5 of this section:

$$H_{annual} = \frac{\sum_{y=1}^{n} H_{HAP,y}}{\sum_{y=1}^{n} M_{st,y}} \qquad \text{(Eq. 5)}$$

Where:

H_{annual} = Organic HAP emission rate for the compliance period, kg organic HAP emitted per kg coating solids used.

$H_{HAP,y}$ = Organic HAP emissions for month, y, kg, determined according to Equation 4 of this section.

$M_{st,y}$ = Total mass of coating solids used during month, y, kg, from Equation 2 of §63.4551.

y = Identifier for months.

n = Number of full or partial months in the compliance period (for the initial compliance period, n equals 12 if the compliance date falls on the first day of a month; otherwise n equals 13; for all following compliance periods, n equals 12).

(n) *Compliance demonstration.* The organic HAP emission rate for the initial compliance period, calculated using Equation 5 of this section, must be less than or equal to the applicable emission limit for each subcategory in §63.4490 or the predominant activity or facility-specific emission limit allowed in §63.4490(c). You must keep all records as required by §§63.4530 and 63.4531. As part of the notification of compliance status required by §63.4510, you must identify the coating operation(s) for which you used the emission rate with add-on controls option and submit a statement that the coating operation(s) was (were) in compliance with the emission limitations during the initial compliance period because the organic HAP emission rate was less than or equal to the applicable emission limit in §63.4490, and for control devices other than solvent recovery system using a liquid-liquid material balance, you achieved the operating limits required by §63.4492 and the work practice standards required by §63.4493.

[69 FR 20990, Apr. 19, 2004, as amended at 85 FR 41154, July 8, 2020]

sfrattini on LAPJZKW1R2 with $$_JOB
VerDate Sep<11>2014 09:16 Apr 04, 2023 Jkt 256165 PO 00000 Frm 00957 Fmt 8010 Sfmt 8010 Q:\40\256165.XXX PC31
ER19AP04.020</MATH> ER19AP04.021</MATH>

§ 63.4562 [Reserved]

§ 63.4563 How do I demonstrate continuous compliance with the emission limitations?

(a) To demonstrate continuous compliance with the applicable emission limit in § 63.4490, the organic HAP emission rate for each compliance period, determined according to the procedures in § 63.4561, must be equal to or less than the applicable emission limit in § 63.4490. A compliance period consists of 12 months. Each month after the end of the initial compliance period described in § 63.4560 is the end of a compliance period consisting of that month and the preceding 11 months. You must perform the calculations in § 63.4561 on a monthly basis using data from the previous 12 months of operation. If you are complying with a facility-specific emission limit under § 63.4490(c), you must also perform the calculation using Equation 1 in § 63.4490(c)(2) on a monthly basis using the data from the previous 12 months of operation.

(b) If the organic HAP emission rate for any 12-month compliance period exceeded the applicable emission limit in § 63.4490, this is a deviation from the emission limitation for that compliance period that must be reported as specified in §§ 63.4510(c)(6) and 63.4520(a)(7).

(c) You must demonstrate continuous compliance with each operating limit required by § 63.4492 that applies to you, as specified in Table 1 to this subpart, when the coating line is in operation.

(1) If an operating parameter is out of the allowed range specified in Table 1 to this subpart, this is a deviation from the operating limit that must be reported as specified in §§ 63.4510(c)(6) and 63.4520(a)(7).

(2) If an operating parameter deviates from the operating limit specified in Table 1 to this subpart, then you must assume that the emission capture system and add-on control device were achieving zero efficiency during the time period of the deviation, unless you have other data indicating the actual efficiency of the emission capture system and add-on control device and the use of these data is approved by the Administrator.

(d) You must meet the requirements for bypass lines in § 63.4568(b) for controlled coating operations for which you do not conduct liquid-liquid material balances. If any bypass line is opened and emissions are diverted to the atmosphere when the coating operation is running, this is a deviation that must be reported as specified in §§ 63.4510(c)(6) and 63.4520(a)(7). For the purposes of completing the compliance calculations specified in §§ 63.4561(h), you must treat the materials used during a deviation on a controlled coating operation as if they were used on an uncontrolled coating operation for the time period of the deviation as indicated in Equation 1 of § 63.4561.

(e) You must demonstrate continuous compliance with the work practice standards in § 63.4493. If you did not develop a work practice plan, or you did not implement the plan, or you did not keep the records required by § 63.4530(i)(8), this is a deviation from the work practice standards that must be reported as specified in §§ 63.4510(c)(6) and 63.4520(a)(7).

(f) As part of each semiannual compliance report required in § 63.4520, you must identify the coating operation(s) for which you used the emission rate with add-on controls option. If there were no deviations from the emission limits in § 63.4490, the operating limits in § 63.4492, and the work practice standards in § 63.4493, submit a statement that you were in compliance with the emission limitations during the reporting period because the organic HAP emission rate for each compliance period was less than or equal to the applicable emission limit in § 63.4490, and you achieved the operating limits required by § 63.4492 and the work practice standards required by § 63.4493 during each compliance period.

(g) On and after January 5, 2021, deviations that occur due to malfunction of the emission capture system, add-on control device, or coating operation that may affect emission capture or control device efficiency are required to operate in accordance with § 63.4500(b). The Administrator will determine whether the deviations are violations according to the provisions in § 63.4500(b).

(h)–(i) [Reserved]

sfrattini on LAPJZKW1R2 with $$_JOB
VerDate Sep<11>2014 09:16 Apr 04, 2023 Jkt 256165 PO 00000 Frm 00958 Fmt 8010 Sfmt 8010 Q:\40\256165.XXX PC31

(j) You must maintain records as specified in §§ 63.4530 and 63.4531.

[69 FR 20990, Apr. 19, 2004, as amended at 71 FR 20465, Apr. 20, 2006; 85 FR 41154, July 8, 2020]

§ 63.4564 What are the general requirements for performance tests?

(a) Before January 5, 2021, you must conduct each performance test required by § 63.4560 according to the requirements in § 63.7(e)(1) and under the conditions in this section, unless you obtain a waiver of the performance test according to the provisions in § 63.7(h). On and after January 5, 2021, you must conduct each performance test required by § 63.4560 according to the requirements in this section unless you obtain a waiver of the performance test according to the provisions in § 63.7(h).

(1) Representative coating operation operating conditions. You must conduct the performance test under representative operating conditions for the coating operation. Operations during periods of startup, shutdown, or nonoperation do not constitute representative conditions for purposes of conducting a performance test. The owner or operator may not conduct performance tests during periods of malfunction. You must record the process information that is necessary to document operating conditions during the test and explain why the conditions represent normal operation. Upon request, you must make available to the Administrator such records as may be necessary to determine the conditions of performance tests.

(2) *Representative emission capture system and add-on control device operating conditions*. You must conduct the performance test when the emission capture system and add-on control device are operating at a representative flow rate, and the add-on control device is operating at a representative inlet concentration. You must record information that is necessary to document emission capture system and add-on control device operating conditions during the test and explain why the conditions represent normal operation.

(b) You must conduct each performance test of an emission capture system according to the requirements in § 63.4565. You must conduct each performance test of an add-on control device according to the requirements in § 63.4566.

[69 FR 20990, Apr. 19, 2004, as amended at 85 FR 41155, July 8, 2020]

§ 63.4565 How do I determine the emission capture system efficiency?

You must use the procedures and test methods in this section to determine capture efficiency as part of each performance test required by § 63.4560.

(a) *Assuming 100 percent capture efficiency*. You may assume the capture system efficiency is 100 percent if both of the conditions in paragraphs (a)(1) and (2) of this section are met:

(1) The capture system meets the criteria in Method 204 of appendix M to 40 CFR part 51 for a PTE and directs all the exhaust gases from the enclosure to an add-on control device.

(2) All coatings, thinners and/or other additives, and cleaning materials used in the coating operation are applied within the capture system; coating solvent flash-off, curing, and drying occurs within the capture system; and the removal or evaporation of cleaning materials from the surfaces they are applied to occurs within the capture system. For example, this criterion is not met if parts enter the open shop environment when being moved between a spray booth and a curing oven.

(b) *Measuring capture efficiency*. If the capture system does not meet both of the criteria in paragraphs (a)(1) and (2) of this section, then you must use one of the three protocols described in paragraphs (c), (d), and (e) of this section to measure capture efficiency. The capture efficiency measurements use TVH capture efficiency as a surrogate for organic HAP capture efficiency. For the protocols in paragraphs (c) and (d) of this section, the capture efficiency measurement must consist of three test runs. Each test run must be at least 3 hours duration or the length of a production run, whichever is longer, up to 8 hours. For the purposes of this test, a production run means the time required for a single part to go from the beginning to the end of the production, which includes surface preparation activities and drying and curing time.

sfrattini on LAPJZKW1R2 with $$_JOB
VerDate Sep<11>2014 09:16 Apr 04, 2023 Jkt 256165 PO 00000 Frm 00959 Fmt 8010 Sfmt 8010 Q:\40\256165.XXX PC31

(c) *Liquid-to-uncaptured-gas protocol using a temporary total enclosure or building enclosure.* The liquid-to-uncaptured-gas protocol compares the mass of liquid TVH in materials used in the coating operation to the mass of TVH emissions not captured by the emission capture system. Use a temporary total enclosure or a building enclosure and the procedures in paragraphs (c)(1) through (6) of this section to measure emission capture system efficiency using the liquid-to-uncaptured-gas protocol.

(1) Either use a building enclosure or construct an enclosure around the coating operation where coatings, thinners and/or other additives, and cleaning materials are applied, and all areas where emissions from these applied coatings and materials subsequently occur, such as flash-off, curing, and drying areas. The areas of the coating operation where capture devices collect emissions for routing to an add-on control device, such as the entrance and exit areas of an oven or spray booth, must also be inside the enclosure. The enclosure must meet the applicable definition of a temporary total enclosure or building enclosure in Method 204 of appendix M to 40 CFR part 51.

(2) Use Method 204A or 204F of appendix M to 40 CFR part 51 to determine the mass fraction of TVH liquid input from each coating, thinner and/or other additive, and cleaning material used in the coating operation during each capture efficiency test run. To make the determination, substitute TVH for each occurrence of the term volatile organic compounds (VOC) in the methods.

(3) Use Equation 1 of this section to calculate the total mass of TVH liquid input from all the coatings, thinners and/or other additives, and cleaning materials used in the coating operation during each capture efficiency test run:

$$TVH_{used} = \sum_{i=1}^{n} (TVH_i)(Vol_i)(D_i) \quad \text{(Eq. 1)}$$

Where:

TVH_{used} = Mass of liquid TVH in materials used in the coating operation during the capture efficiency test run, kg.

TVH_i = Mass fraction of TVH in coating, thinner and/or other additive, or cleaning material, i, that is used in the coating operation during the capture efficiency test run, kg TVH per kg material.

Vol_i = Total volume of coating, thinner and/or other additive, or cleaning material, i, used in the coating operation during the capture efficiency test run, liters.

D_i = Density of coating, thinner and/or other additive, or cleaning material, i, kg material per liter material.

n = Number of different coatings, thinners and/or other additives, and cleaning materials used in the coating operation during the capture efficiency test run.

(4) Use Method 204D or 204E of appendix M to 40 CFR part 51 to measure the total mass, kg, of TVH emissions that are not captured by the emission capture system. They are measured as they exit the temporary total enclosure or building enclosure during each capture efficiency test run. To make the measurement, substitute TVH for each occurrence of the term VOC in the methods.

(i) Use Method 204D of appendix M to 40 CFR part 51 if the enclosure is a temporary total enclosure.

(ii) Use Method 204E of appendix M to 40 CFR 51 if the enclosure is a building enclosure. During the capture efficiency measurement, all organic compound emitting operations inside the building enclosure, other than the coating operation for which capture efficiency is being determined, must be shut down, but all fans and blowers must be operating normally.

(5) For each capture efficiency test run, determine the percent capture efficiency of the emission capture system using Equation 2 of this section:

$$CE = \frac{(TVH_{used} - TVH_{uncaptured})}{TVH_{used}} \times 100 \quad \text{(Eq. 2)}$$

sfrattini on LAPJZKW1R2 with $$_JOB
VerDate Sep<11>2014 09:16 Apr 04, 2023 Jkt 256165 PO 00000 Frm 00960 Fmt 8010 Sfmt 8006 Q:\40\256165.XXX PC31
ER19AP04.022</MATH> ER19AP04.023</MATH>

Where:

CE = Capture efficiency of the emission capture system vented to the add-on control device, percent.

TVH_{used} = Total mass of TVH liquid input used in the coating operation during the capture efficiency test run, kg.

$TVH_{uncaptured}$ = Total mass of TVH that is not captured by the emission capture system and that exits from the temporary total enclosure or building enclosure during the capture efficiency test run, kg.

(6) Determine the capture efficiency of the emission capture system as the average of the capture efficiencies measured in the three test runs.

(d) *Gas-to-gas protocol using a temporary total enclosure or a building enclosure*. The gas-to-gas protocol compares the mass of TVH emissions captured by the emission capture system to the mass of TVH emissions not captured. Use a temporary total enclosure or a building enclosure and the procedures in paragraphs (d)(1) through (5) of this section to measure emission capture system efficiency using the gas-to-gas protocol.

(1) Either use a building enclosure or construct an enclosure around the coating operation where coatings, thinners and/or other additives, and cleaning materials are applied, and all areas where emissions from these applied coatings and materials subsequently occur, such as flash-off, curing, and drying areas. The areas of the coating operation where capture devices collect emissions generated by the coating operation for routing to an add-on control device, such as the entrance and exit areas of an oven or a spray booth, must also be inside the enclosure. The enclosure must meet the applicable definition of a temporary total enclosure or building enclosure in Method 204 of appendix M to 40 CFR part 51.

(2) Use Method 204B or 204C of appendix M to 40 CFR part 51 to measure the total mass, kg, of TVH emissions captured by the emission capture system during each capture efficiency test run as measured at the inlet to the add-on control device. To make the measurement, substitute TVH for each occurrence of the term VOC in the methods.

(i) The sampling points for the Method 204B or 204C measurement must be upstream from the add-on control device and must represent total emissions routed from the capture system and entering the add-on control device.

(ii) If multiple emission streams from the capture system enter the add-on control device without a single common duct, then the emissions entering the add-on control device must be simultaneously measured in each duct and the total emissions entering the add-on control device must be determined.

(3) Use Method 204D or 204E of appendix M to 40 CFR part 51 to measure the total mass, kg, of TVH emissions that are not captured by the emission capture system; they are measured as they exit the temporary total enclosure or building enclosure during each capture efficiency test run. To make the measurement, substitute TVH for each occurrence of the term VOC in the methods.

(i) Use Method 204D of appendix M to 40 CFR part 51 if the enclosure is a temporary total enclosure.

(ii) Use Method 204E of appendix M to 40 CFR part 51 if the enclosure is a building enclosure. During the capture efficiency measurement, all organic compound emitting operations inside the building enclosure, other than the coating operation for which capture efficiency is being determined, must be shut down, but all fans and blowers must be operating normally.

(4) For each capture efficiency test run, determine the percent capture efficiency of the emission capture system using Equation 3 of this section:

$$CE = \frac{TVH_{captured}}{\left(TVH_{captured} + TVH_{uncaptured}\right)} \times 100 \qquad \text{(Eq. 3)}$$

sfrattini on LAPJZKW1R2 with $$_JOB
VerDate Sep<11>2014 09:16 Apr 04, 2023 Jkt 256165 PO 00000 Frm 00961 Fmt 8010 Sfmt 8006 Q:\40\256165.XXX PC31
ER19AP04.024</MATH>

Where:

CE = Capture efficiency of the emission capture system vented to the add-on control device, percent.

$TVH_{captured}$ = Total mass of TVH captured by the emission capture system as measured at the inlet to the add-on control device during the emission capture efficiency test run, kg.

$TVH_{uncaptured}$ = Total mass of TVH that is not captured by the emission capture system and that exits from the temporary total enclosure or building enclosure during the capture efficiency test run, kg.

(5) Determine the capture efficiency of the emission capture system as the average of the capture efficiencies measured in the three test runs.

(e) *Alternative capture efficiency protocol.* As an alternative to the procedures specified in paragraphs (c) and (d) of this section and subject to the approval of the Administrator, you may determine capture efficiency using any other capture efficiency protocol and test methods that satisfy the criteria of either the DQO or LCL approach as described in appendix A to subpart KK of this part.

[69 FR 20990, Apr. 19, 2004, as amended at 85 FR 41155, July 8, 2020]

§ 63.4566 How do I determine the add-on control device emission destruction or removal efficiency?

You must use the procedures and test methods in this section to determine the add-on control device emission destruction or removal efficiency as part of the performance test required by § 63.4560. For each performance test, you must conduct three test runs as specified in § 63.7(e)(3) and each test run must last at least 1 hour.

(a) For all types of add-on control devices, use the test methods specified in paragraphs (a)(1) through (5) of this section.

(1) Use EPA Method 1 or 1A of appendix A–1 to 40 CFR part 60, as appropriate, to select sampling sites and velocity traverse points.

(2) Use EPA Method 2, 2A, 2C, 2D, or 2F of appendix A–1 to 40 CFR part 60, or 2G of appendix A–2 to 40 CFR part 60, as appropriate, to measure gas volumetric flow rate.

(3) Use EPA Method 3, 3A, or 3B of appendix A–2 to 40 CFR part 60, as appropriate, for gas analysis to determine dry molecular weight.

(4) Use EPA Method 4 of appendix A–3 to 40 CFR part 60, to determine stack gas moisture.

(5) Methods for determining gas volumetric flow rate, dry molecular weight, and stack gas moisture must be performed, as applicable, during each test run.

(b) Measure total gaseous organic mass emissions as carbon at the inlet and outlet of the add-on control device simultaneously, using either EPA Method 25 or 25A of appendix A–7 to 40 CFR part 60.

(1) Use EPA Method 25 of appendix A–7 if the add-on control device is an oxidizer and you expect the total gaseous organic concentration as carbon to be more than 50 parts per million (ppm) at the control device outlet.

(2) Use EPA Method 25A of appendix A–7 if the add-on control device is an oxidizer and you expect the total gaseous organic concentration as carbon to be 50 ppm or less at the control device outlet.

(3) Use EPA Method 25A of appendix A–7 if the add-on control device is not an oxidizer.

(4) You may use EPA Method 18 in appendix A–6 of part 60 to subtract methane emissions from measured total gaseous organic mass emissions as carbon.

(c) If two or more add-on control devices are used for the same emission stream, then you must measure emissions at the outlet to the atmosphere of each device. For example, if one add-on control device is a concentrator with an outlet to the atmosphere for the high-volume dilute stream that has been treated by the concentrator, and a second add-on control device is an oxidizer with an outlet to the atmosphere for the low-volume concentrated stream that is treated with the oxidizer, you must measure emissions at the outlet of the oxidizer and the high volume dilute stream outlet of the concentrator.

(d) For each test run, determine the total gaseous organic emissions mass flow rates for the inlet and the outlet of the add-on control device, using Equation 1 of this section. If there is more than one inlet or outlet to the

sfrattini on LAPJZKW1R2 with $$_JOB
VerDate Sep<11>2014 09:16 Apr 04, 2023 Jkt 256165 PO 00000 Frm 00962 Fmt 8010 Sfmt 8010 Q:\40\256165.XXX PC31

add-on control device, you must calculate the total gaseous organic mass flow rate using Equation 1 of this section for each inlet and each outlet and then total all of the inlet emissions and total all of the outlet emissions:

$$M_f = Q_{sd} C_c (12)(0.0416)(10^{-6}) \quad \text{(Eq. 1)}$$

Where:

M_f = Total gaseous organic emissions mass flow rate, kg/per hour (h).

C_c = Concentration of organic compounds as carbon in the vent gas, as determined by Method 25 or Method 25A, parts per million by volume (ppmv), dry basis.

Q_{sd} = Volumetric flow rate of gases entering or exiting the add-on control device, as determined by Method 2, 2A, 2C, 2D, 2F, or 2G, dry standard cubic meters/hour (dscm/h).

0.0416 = Conversion factor for molar volume, kg-moles per cubic meter (mol/m^3) (@ 293 Kelvin (K) and 760 millimeters of mercury (mmHg)).

(e) For each test run, determine the add-on control device organic emissions destruction or removal efficiency, using Equation 2 of this section:

$$DRE = \frac{M_{fi} - M_{fo}}{M_{fi}} \times 100 \quad \text{(Eq. 2)}$$

Where:

DRE = Organic emissions destruction or removal efficiency of the add-on control device, percent.

M_{fi} = Total gaseous organic emissions mass flow rate at the inlet(s) to the add-on control device, using Equation 1 of this section, kg/h.

M_{fo} = Total gaseous organic emissions mass flow rate at the outlet(s) of the add-on control device, using Equation 1 of this section, kg/h.

(f) Determine the emission destruction or removal efficiency of the add-on control device as the average of the efficiencies determined in the three test runs and calculated in Equation 2 of this section.

[69 FR 20990, Apr. 19, 2004, as amended at 85 FR 41155, July 8, 2020]

§63.4567 How do I establish the emission capture system and add-on control device operating limits during the performance test?

During performance tests required by §63.4560 and described in §§63.4564, 63.4565, and 63.4566, you must establish the operating limits required by §63.4492 according to this section, unless you have received approval for alternative monitoring and operating limits under §63.8(f) as specified in §63.4492.

(a) *Thermal oxidizers.* If your add-on control device is a thermal oxidizer, establish the operating limits according to paragraphs (a)(1) and (2) of this section.

(1) During performance tests, you must monitor and record the combustion temperature at least once every 15 minutes during each of the three test runs. You must monitor the temperature in the firebox of the thermal oxidizer or immediately downstream of the firebox before any substantial heat exchange occurs.

(2) For each performance test, use the data collected during the performance test to calculate and record the average combustion temperature maintained during the performance test. This average combustion temperature is the minimum operating limit for your thermal oxidizer.

(b) *Catalytic oxidizers.* If your add-on control device is a catalytic oxidizer, establish the operating limits according to either paragraphs (b)(1) and (2) or paragraphs (b)(3) and (4) of this section.

(1) During performance tests, you must monitor and record the temperature just before the catalyst bed and the temperature difference across the catalyst bed at least once every 15 minutes during each of the three test runs.

(2) For each performance test, use the data collected during the performance test to calculate and record the average temperature just before the catalyst bed and the average temperature difference across the catalyst bed maintained during the performance test. These are the minimum operating limits for your catalytic oxidizer.

(3) You must monitor the temperature at the inlet to the catalyst bed and implement a site-specific inspection and maintenance plan for your catalytic oxidizer as specified in paragraph (b)(4) of this section. During performance tests, you must monitor and record the temperature just before the

sfrattini on LAPJZKW1R2 with $$_JOB
VerDate Sep<11>2014 09:16 Apr 04, 2023 Jkt 256165 PO 00000 Frm 00963 Fmt 8010 Sfmt 8010 Q:\40\256165.XXX PC31
ER19AP04.025</MATH> ER19AP04.026</MATH>

catalyst bed at least once every 15 minutes during each of the three test runs. For each performance test, use the data collected during the performance test to calculate and record the average temperature just before the catalyst bed during the performance test. This is the minimum operating limit for your catalytic oxidizer.

(4) You must develop and implement an inspection and maintenance plan for your catalytic oxidizer(s) for which you elect to monitor according to paragraph (b)(3) of this section. The plan must address, at a minimum, the elements specified in paragraphs (b)(4)(i) through (iii) of this section.

(i) Annual sampling and analysis of the catalyst activity (*i.e.*, conversion efficiency) following the manufacturer's or catalyst supplier's recommended procedures. If problems are found during the catalyst activity test, you must replace the catalyst bed or take other corrective action consistent with the manufacturer's recommendations.

(ii) Monthly external inspection of the catalytic oxidizer system, including the burner assembly and fuel supply lines for problems and, as necessary, adjust the equipment to assure proper air-to-fuel mixtures.

(iii) Annual internal inspection of the catalyst bed to check for channeling, abrasion, and settling. If problems are found during the annual internal inspection of the catalyst, you must replace the catalyst bed or take other corrective action consistent with the manufacturer's recommendations. If the catalyst bed is replaced and is not of like or better kind and quality as the old catalyst then you must conduct a new performance test to determine destruction efficiency according to § 63.4566. If a catalyst bed is replaced and the replacement catalyst is of like or better kind and quality as the old catalyst, then a new performance test to determine destruction efficiency is not required and you may continue to use the previously established operating limits for that catalytic oxidizer.

(c) *Regenerative carbon adsorbers*. If your add-on control device is a regenerative carbon adsorber, establish the operating limits according to paragraphs (c)(1) and (2) of this section.

(1) During performance tests, you must monitor and record the total regeneration desorbing gas (*e.g.*, steam or nitrogen) mass flow for each regeneration cycle, and the carbon bed temperature after each carbon bed regeneration and cooling cycle for the regeneration cycle either immediately preceding or immediately following the performance test.

(2) The operating limits for your regenerative carbon adsorber are the minimum total desorbing gas mass flow recorded during the regeneration cycle and the maximum carbon bed temperature recorded after the cooling cycle.

(d) *Condensers*. If your add-on control device is a condenser, establish the operating limits according to paragraphs (d)(1) and (2) of this section.

(1) During performance tests, you must monitor and record the condenser outlet (product side) gas temperature at least once every 15 minutes during each of the three test runs of the performance test.

(2) For each performance test, use the data collected during the performance test to calculate and record the average condenser outlet (product side) gas temperature maintained during the performance test. This average condenser outlet gas temperature is the maximum operating limit for your condenser.

(e) *Concentrators*. If your add-on control device includes a concentrator, you must establish operating limits for the concentrator according to paragraphs (e)(1) through (4) of this section.

(1) During performance tests, you must monitor and record the desorption concentrate stream gas temperature at least once every 15 minutes during each of the three runs of the performance test.

(2) For each performance test, use the data collected during the performance test to calculate and record the average temperature. This is the minimum operating limit for the desorption concentrate gas stream temperature.

(3) During each performance test, you must monitor and record the pressure drop of the dilute stream across the concentrator at least once every 15

sfrattini on LAPJZKW1R2 with $$_JOB
VerDate Sep<11>2014 09:16 Apr 04, 2023 Jkt 256165 PO 00000 Frm 00964 Fmt 8010 Sfmt 8010 Q:\40\256165.XXX PC31

minutes during each of the three runs of the performance test.

(4) For each performance test, use the data collected during the performance test to calculate and record the average pressure drop. This is the minimum operating limit for the dilute stream across the concentrator.

(f) *Emission capture systems.* For each capture device that is not part of a PTE that meets the criteria of § 63.4565(a), establish an operating limit for either the gas volumetric flow rate or duct static pressure, as specified in paragraphs (f)(1) and (2) of this section. The operating limit for a PTE is specified in Table 1 to this subpart.

(1) During the capture efficiency determination required by § 63.4560 and described in §§ 63.4564 and 63.4565, you must monitor and record either the gas volumetric flow rate or the duct static pressure for each separate capture device in your emission capture system at least once every 15 minutes during each of the three test runs at a point in the duct between the capture device and the add-on control device inlet.

(2) Calculate and record the average gas volumetric flow rate or duct static pressure for the three test runs for each capture device. This average gas volumetric flow rate or duct static pressure is the minimum operating limit for that specific capture device.

[69 FR 20990, Apr. 19, 2004, as amended at 85 FR 41155, July 8, 2020]

§ 63.4568 What are the requirements for continuous parameter monitoring system installation, operation, and maintenance?

(a) *General.* You must install, operate, and maintain each CPMS specified in paragraphs (c), (e), (f), and (g) of this section according to paragraphs (a)(1) through (6) of this section. You must install, operate, and maintain each CPMS specified in paragraphs (b) and (d) of this section according to paragraphs (a)(3) through (5) of this section.

(1) The CPMS must complete a minimum of one cycle of operation for each successive 15-minute period. You must have a minimum of four equally spaced successive cycles of CPMS operation in 1 hour.

(2) You must determine the average of all recorded readings for each successive 3-hour period of the emission capture system and add-on control device operation.

(3) You must record the results of each inspection, calibration, and validation check of the CPMS.

(4) Before January 5, 2021, you must maintain the CPMS at all times and have available necessary parts for routine repairs of the monitoring equipment. On and after January 5, 2021, you must maintain the CPMS at all times in accordance with § 63.4500(b) and keep necessary parts readily available for routine repairs of the monitoring equipment.

(5) Before January 5, 2021, you must operate the CPMS and collect emission capture system and add-on control device parameter data at all times that a controlled coating operation is operating, except during monitoring malfunctions, associated repairs, and required quality assurance or control activities (including, if applicable, calibration checks and required zero and span adjustments). On and after January 5, 2021, you must operate the CPMS and collect emission capture system and add-on control device parameter data at all times in accordance with § 63.4500(b).

(6) You must not use emission capture system or add-on control device parameter data recorded during monitoring malfunctions, associated repairs, out-of-control periods, or required quality assurance or control activities when calculating data averages. You must use all the data collected during all other periods in calculating the data averages for determining compliance with the emission capture system and add-on control device operating limits.

(7) A monitoring malfunction is any sudden, infrequent, not reasonably preventable failure of the CPMS to provide valid data. Monitoring failures that are caused in part by poor maintenance or careless operation are not malfunctions. Before January 5, 2021, any period for which the monitoring system is out-of-control and data are not available for required calculations is a deviation from the monitoring requirements. On and after January 5, 2021, except for periods of required quality assurance or control activities,

sfrattini on LAPJZKW1R2 with $$_JOB
VerDate Sep<11>2014 09:16 Apr 04, 2023 Jkt 256165 PO 00000 Frm 00965 Fmt 8010 Sfmt 8010 Q:\40\256165.XXX PC31

any period for which the CPMS fails to operate and record data continuously as required by paragraph (a)(5) of this section, or generates data that cannot be included in calculating averages as specified in (a)(6) of this section constitutes a deviation from the monitoring requirements.

(b) *Capture system bypass line.* You must meet the requirements of paragraphs (b)(1) and (2) of this section for each emission capture system that contains bypass lines that could divert emissions away from the add-on control device to the atmosphere.

(1) You must monitor or secure the valve or closure mechanism controlling the bypass line in a nondiverting position in such a way that the valve or closure mechanism cannot be opened without creating a record that the valve was opened. The method used to monitor or secure the valve or closure mechanism must meet one of the requirements specified in paragraphs (b)(1)(i) through (v) of this section.

(i) *Flow control position indicator.* Install, calibrate, maintain, and operate according to the manufacturer's specifications a flow control position indicator that takes a reading at least once every 15 minutes and provides a record indicating whether the emissions are directed to the add-on control device or diverted from the add-on control device. The time of occurrence and flow control position must be recorded, as well as every time the flow direction is changed. The flow control position indicator must be installed at the entrance to any bypass line that could divert the emissions away from the add-on control device to the atmosphere.

(ii) *Car-seal or lock-and-key valve closures.* Secure any bypass line valve in the closed position with a car-seal or a lock-and-key type configuration. You must visually inspect the seal or closure mechanism at least once every month to ensure that the valve is maintained in the closed position, and the emissions are not diverted away from the add-on control device to the atmosphere.

(iii) *Valve closure monitoring.* Ensure that any bypass line valve is in the closed (nondiverting) position through monitoring of valve position at least once every 15 minutes. You must inspect the monitoring system at least once every month to verify that the monitor will indicate valve position.

(iv) *Automatic shutdown system.* Use an automatic shutdown system in which the coating operation is stopped when flow is diverted by the bypass line away from the add-on control device to the atmosphere when the coating operation is running. You must inspect the automatic shutdown system at least once every month to verify that it will detect diversions of flow and shut down the coating operation.

(v) *Flow direction indicator.* Install, calibrate, maintain, and operate according to the manufacturer's specifications a flow direction indicator that takes a reading at least once every 15 minutes and provides a record indicating whether the emissions are directed to the add-on control device or diverted from the add-on control device. Each time the flow direction changes, the next reading of the time of occurrence and flow direction must be recorded. The flow direction indicator must be installed in each bypass line or air makeup supply line that could divert the emissions away from the add-on control device to the atmosphere.

(2) If any bypass line is opened, you must include a description of why the bypass line was opened and the length of time it remained open in the semiannual compliance reports required in § 63.4520.

(c) *Thermal oxidizers and catalytic oxidizers.* If you are using a thermal oxidizer or catalytic oxidizer as an add-on control device (including those used with concentrators or with carbon adsorbers to treat desorbed concentrate streams), you must comply with the requirements in paragraphs (c)(1) through (3) of this section:

(1) For a thermal oxidizer, install a gas temperature monitor in the firebox of the thermal oxidizer or in the duct immediately downstream of the firebox before any substantial heat exchange occurs.

(2) For a catalytic oxidizer, install gas temperature monitors upstream and/or downstream of the catalyst bed as required in § 63.3967(b).

(3) For all thermal oxidizers and catalytic oxidizers, you must meet the

sfrattini on LAPJZKW1R2 with $$_JOB
VerDate Sep<11>2014 09:16 Apr 04, 2023 Jkt 256165 PO 00000 Frm 00966 Fmt 8010 Sfmt 8010 Q:\40\256165.XXX PC31

requirements in paragraphs (a) and (c)(3)(i) through (v) of this section for each gas temperature monitoring device. For the purposes of this paragraph (c)(3), a thermocouple is part of the temperature sensor.

(i) Locate the temperature sensor in a position that provides a representative temperature.

(ii) Use a temperature sensor with a measurement sensitivity of 5 degrees Fahrenheit or 1.0 percent of the temperature value, whichever is larger.

(iii) Before using the sensor for the first time or when relocating or replacing the sensor, perform a validation check by comparing the sensor output to a calibrated temperature measurement device or by comparing the sensor output to a simulated temperature.

(iv) Conduct an accuracy audit every quarter and after every deviation. Accuracy audit methods include comparisons of sensor output to redundant temperature sensors, to calibrated temperature measurement devices, or to temperature simulation devices.

(v) Conduct a visual inspection of each sensor every quarter if redundant temperature sensors are not used.

(d) *Regenerative carbon adsorbers*. If you are using a regenerative carbon adsorber as an add-on control device, you must monitor the total regeneration desorbing gas (*e.g.*, steam or nitrogen) mass flow for each regeneration cycle, the carbon bed temperature after each regeneration and cooling cycle, and comply with paragraphs (a)(3) through (5) and (d)(1) through (3) of this section.

(1) The regeneration desorbing gas mass flow monitor must be an integrating device having a measurement sensitivity of plus or minus 10 percent capable of recording the total regeneration desorbing gas mass flow for each regeneration cycle.

(2) The carbon bed temperature monitor must be capable of recording the temperature within 15 minutes of completing any carbon bed cooling cycle.

(3) For all regenerative carbon adsorbers, you must meet the requirements in paragraphs (c)(3)(i) through (v) of this section for each temperature monitoring device.

(e) *Condensers*. If you are using a condenser, you must monitor the condenser outlet (product side) gas temperature and comply with paragraphs (a) and (e)(1) and (2) of this section.

(1) The temperature monitor must provide a gas temperature record at least once every 15 minutes.

(2) For all condensers, you must meet the requirements in paragraphs (c)(3)(i) through (v) of this section for each temperature monitoring device.

(f) *Concentrators*. If you are using a concentrator, such as a zeolite wheel or rotary carbon bed concentrator, you must comply with the requirements in paragraphs (f)(1) and (2) of this section.

(1) You must install a temperature monitor in the desorption gas stream. The temperature monitor must meet the requirements in paragraphs (a) and (c)(3) of this section.

(2) You must install a device to monitor pressure drop across the zeolite wheel or rotary carbon bed. The pressure monitoring device must meet the requirements in paragraphs (a) and (g)(2) of this section.

(g) *Emission capture systems*. The capture system monitoring system must comply with the applicable requirements in paragraphs (g)(1) and (2) of this section.

(1) For each flow measurement device, you must meet the requirements in paragraphs (a) and (g)(1)(i) through (vii) of this section.

(i) Locate a flow sensor in a position that provides a representative flow measurement in the duct from each capture device in the emission capture system to the add-on control device.

(ii) Use a flow sensor with an accuracy of at least 10 percent of the flow.

(iii) Perform an initial sensor calibration in accordance with the manufacturer's requirements.

(iv) Perform a validation check before initial use or upon relocation or replacement of a sensor. Validation checks include comparison of sensor values with electronic signal simulations or via relative accuracy testing.

(v) Conduct an accuracy audit every quarter and after every deviation. Accuracy audit methods include comparisons of sensor values with electronic signal simulations or via relative accuracy testing.

(vi) Perform leak checks monthly.

sfrattini on LAPJZKW1R2 with $$_JOB
VerDate Sep<11>2014 09:16 Apr 04, 2023 Jkt 256165 PO 00000 Frm 00967 Fmt 8010 Sfmt 8010 Q:\40\256165.XXX PC31

(vii) Perform visual inspections of the sensor system quarterly if there is no redundant sensor.

(2) For each pressure drop measurement device, you must comply with the requirements in paragraphs (a) and (g)(2)(i) through (vii) of this section.

(i) Locate the pressure sensor(s) in or as close to a position that provides a representative measurement of the pressure drop across each opening you are monitoring.

(ii) Use a pressure sensor with an accuracy of at least 0.5 inches of water column or 5 percent of the measured value, whichever is larger.

(iii) Perform an initial calibration of the sensor according to the manufacturer's requirements.

(iv) Conduct a validation check before initial operation or upon relocation or replacement of a sensor. Validation checks include comparison of sensor values to calibrated pressure measurement devices or to pressure simulation using calibrated pressure sources.

(v) Conduct accuracy audits every quarter and after every deviation. Accuracy audits include comparison of sensor values to calibrated pressure measurement devices or to pressure simulation using calibrated pressure sources.

(vi) Perform monthly leak checks on pressure connections. A pressure of at least 1.0 inches of water column to the connection must yield a stable sensor result for at least 15 seconds.

(vii) Perform a visual inspection of the sensor at least monthly if there is no redundant sensor.

[69 FR 20990, Apr. 19, 2004, as amended at 85 FR 41156, July 8, 2020]

OTHER REQUIREMENTS AND INFORMATION

§ 63.4580 Who implements and enforces this subpart?

(a) This subpart can be implemented and enforced by us, the U.S. Environmental Protection Agency (EPA), or a delegated authority such as your State, local, or tribal agency. If the Administrator has delegated authority to your State, local, or tribal agency, then that agency (as well as the EPA) has the authority to implement and enforce this subpart. You should contact your EPA Regional Office to find out if implementation and enforcement of this subpart is delegated to your State, local, or tribal agency.

(b) In delegating implementation and enforcement authority of this subpart to a State, local, or tribal agency under subpart E of this part, the authorities contained in paragraph (c) of this section are retained by the Administrator and are not transferred to the State, local, or tribal agency.

(c) The authorities that will not be delegated to State, local, or tribal agencies are listed in paragraphs (c)(1) through (4) of this section:

(1) Approval of alternatives to the requirements in §§ 63.4481 through 4483 and §§ 63.4490 through 4493.

(2) Approval of major alternatives to test methods under § 63.7(e)(2)(ii) and (f) and as defined in § 63.90.

(3) Approval of major alternatives to monitoring under § 63.8(f) and as defined in § 63.90.

(4) Approval of major alternatives to recordkeeping and reporting under § 63.10(f) and as defined in § 63.90.

§ 63.4581 What definitions apply to this subpart?

Terms used in this subpart are defined in the CAA, in 40 CFR 63.2, and in this section as follows:

Additive means a material that is added to a coating after purchase from a supplier (e.g., catalysts, activators, accelerators).

Add-on control means an air pollution control device, such as a thermal oxidizer or carbon adsorber, that reduces pollution in an air stream by destruction or removal before discharge to the atmosphere.

Adhesive, adhesive coating means any chemical substance that is applied for the purpose of bonding two surfaces together. Products used on humans and animals, adhesive tape, contact paper, or any other product with an adhesive incorporated onto or in an inert substrate shall not be considered adhesives under this subpart.

Assembled on-road vehicle coating means any coating operation in which coating is applied to the surface of some component or surface of a fully assembled motor vehicle or trailer intended for on-road use including, but not limited to, components or surfaces

sfrattini on LAPJZKW1R2 with $$_JOB
VerDate Sep<11>2014 09:16 Apr 04, 2023 Jkt 256165 PO 00000 Frm 00968 Fmt 8010 Sfmt 8010 Q:\40\256165.XXX PC31

on automobiles and light-duty trucks that have been repaired after a collision or otherwise repainted, fleet delivery trucks, and motor homes and other recreational vehicles (including camping trailers and fifth wheels). Assembled on-road vehicle coating includes the concurrent coating of parts of the assembled on-road vehicle that are painted off-vehicle to protect systems, equipment, or to allow full coverage. Assembled on-road vehicle coating does not include surface coating operations that meet the applicability criteria of the Automobiles and Light-Duty Trucks NESHAP. Assembled on-road vehicle coating also does not include the use of adhesives, sealants, and caulks used in assembling on-road vehicles.

Automotive lamp coating means any coating operation in which coating is applied to the surface of some component of the body of an exterior automotive lamp, including the application of reflective argent coatings and clear topcoats. Exterior automotive lamps include head lamps, tail lamps, turn signals, brake lights, and side marker lights. Automotive lamp coating does not include any coating operation performed on an assembled on-road vehicle.

Capture device means a hood, enclosure, room, floor sweep, or other means of containing or collecting emissions and directing those emissions into an add-on air pollution control device.

Capture efficiency or capture system efficiency means the portion (expressed as a percentage) of the pollutants from an emission source that is delivered to an add-on control device.

Capture system means one or more capture devices intended to collect emissions generated by a coating operation in the use of coatings or cleaning materials, both at the point of application and at subsequent points where emissions from the coatings and cleaning materials occur, such as flashoff, drying, or curing. As used in this subpart, multiple capture devices that collect emissions generated by a coating operation are considered a single capture system.

Cleaning material means a solvent used to remove contaminants and other materials, such as dirt, grease, oil, and dried or wet coating (*e.g.*, depainting), from a substrate before or after coating application or from equipment associated with a coating operation, such as spray booths, spray guns, racks, tanks, and hangers. Thus, it includes any cleaning material used on substrates or equipment or both.

Coating means a material applied to a substrate for decorative, protective, or functional purposes. Such materials include, but are not limited to, paints, sealants, liquid plastic coatings, caulks, inks, adhesives, and maskants. Decorative, protective, or functional materials that consist only of protective oils for metal, acids, bases, or any combination of these substances, or paper film or plastic film which may be pre-coated with an adhesive by the film manufacturer, are not considered coatings for the purposes of this subpart. A liquid plastic coating means a coating made from fine particle-size polyvinyl chloride (PVC) in solution (also referred to as a plastisol).

Coating operation means equipment used to apply cleaning materials to a substrate to prepare it for coating application (surface preparation) or to remove dried coating; to apply coating to a substrate (coating application) and to dry or cure the coating after application; or to clean coating operation equipment (equipment cleaning). A single coating operation may include any combination of these types of equipment, but always includes at least the point at which a given quantity of coating or cleaning material is applied to a given part and all subsequent points in the affected source where organic HAP are emitted from the specific quantity of coating or cleaning material on the specific part. There may be multiple coating operations in an affected source. Coating application with handheld, non-refillable aerosol containers, touch-up markers, or marking pens is not a coating operation for the purposes of this subpart.

Coatings solids means the nonvolatile portion of the coating that makes up the dry film.

Continuous parameter monitoring system (CPMS) means the total equipment that may be required to meet the data acquisition and availability requirements of this subpart, used to sample,

sfrattini on LAPJZKW1R2 with $$_JOB
VerDate Sep<11>2014 09:16 Apr 04, 2023 Jkt 256165 PO 00000 Frm 00969 Fmt 8010 Sfmt 8010 Q:\40\256165.XXX PC31

condition (if applicable), analyze, and provide a record of coating operation, or capture system, or add-on control device parameters.

Controlled coating operation means a coating operation from which some or all of the organic HAP emissions are routed through an emission capture system and add-on control device.

Deviation means:

(1) Before January 5, 2021, any instance in which an affected source subject to this subpart, or an owner or operator of such a source:

(i) Fails to meet any requirement or obligation established by this subpart including but not limited to, any emission limit or operating limit or work practice standard;

(ii) Fails to meet any term or condition that is adopted to implement an applicable requirement in this subpart and that is included in the operating permit for any affected source required to obtain such a permit; or

(iii) Fails to meet any emission limit, or operating limit, or work practice standard in this subpart during SSM, regardless of whether or not such failure is permitted by this subpart; and

(2) On and after January 5, 2021, any instance in which an affected source subject to this subpart or an owner or operator of such a source:

(i) Fails to meet any requirement or obligation established by this subpart including but not limited to any emission limit, operating limit, or work practice standard; or

(ii) Fails to meet any term or condition that is adopted to implement an applicable requirement in this subpart and that is included in the operating permit for any affected source required to obtain such a permit.

Emission limitation means the aggregate of all requirements associated with a compliance option including emission limit, operating limit, work practice standard, etc.

Enclosure means a structure that surrounds a source of emissions and captures and directs the emissions to an add-on control device.

Exempt compound means a specific compound that is not considered a VOC due to negligible photochemical reactivity. The exempt compounds are listed in 40 CFR 51.100(s).

Facility maintenance means the routine repair or renovation (including the surface coating) of the tools, equipment, machinery, and structures that comprise the infrastructure of the affected facility and that are necessary for the facility to function in its intended capacity.

General use coating means any coating operation that is not an automotive lamp, TPO, or assembled on-road vehicle coating operation.

Hobby shop means any surface coating operation, located at an affected source, that is used exclusively for personal, noncommercial purposes by the affected source's employees or assigned personnel.

Manufacturer's formulation data means data on a material (such as a coating) that are supplied by the material manufacturer based on knowledge of the ingredients used to manufacture that material, rather than based on testing of the material with the test methods specified in § 63.4541. Manufacturer's formulation data may include, but are not limited to, information on density, organic HAP content, volatile organic matter content, and coating solids content.

Mass fraction of coating solids means the ratio of the mass of solids (also known as the mass of nonvolatiles) to the mass of a coating in which it is contained; kg of coating solids per kg of coating.

Mass fraction of organic HAP means the ratio of the mass of organic HAP to the mass of a material in which it is contained, expressed as kg of organic HAP per kg of material.

Month means a calendar month or a pre-specified period of 28 days to 35 days to allow for flexibility in recordkeeping when data are based on a business accounting period.

Non-HAP coating means, for the purposes of this subpart, a coating that contains no more than 0.1 percent by mass of any individual organic HAP that is listed in table 5 to this subpart and no more than 1.0 percent by mass for any other individual HAP.

Organic HAP content means the mass of organic HAP emitted per mass of

sfrattini on LAPJZKW1R2 with $$_JOB
VerDate Sep<11>2014 09:16 Apr 04, 2023 Jkt 256165 PO 00000 Frm 00970 Fmt 8010 Sfmt 8010 Q:\40\256165.XXX PC31

coating solids used for a coating calculated using Equation 1 of §63.4541. The organic HAP content is determined for the coating in the condition it is in when received from its manufacturer or supplier and does not account for any alteration after receipt. For reactive adhesives in which some of the HAP react to form solids and are not emitted to the atmosphere, organic HAP content is the mass of organic HAP that is emitted, rather than the organic HAP content of the coating as it is received.

Permanent total enclosure (PTE) means a permanently installed enclosure that meets the criteria of Method 204 of appendix M, 40 CFR part 51, for a PTE and that directs all the exhaust gases from the enclosure to an add-on control device.

Personal watercraft means a vessel (boat) which uses an inboard motor powering a water jet pump as its primary source of motive power and which is designed to be operated by a person or persons sitting, standing, or kneeling on the vessel, rather than in the conventional manner of sitting or standing inside the vessel.

Plastic part and product means any piece or combination of pieces of which at least one has been formed from one or more resins. Such pieces may be solid, porous, flexible or rigid.

Protective oil means an organic material that is applied to metal for the purpose of providing lubrication or protection from corrosion without forming a solid film. This definition of protective oil includes, but is not limited to, lubricating oils, evaporative oils (including those that evaporate completely), and extrusion oils.

Reactive adhesive means adhesive systems composed, in part, of volatile monomers that react during the adhesive curing reaction, and, as a result, do not evolve from the film during use. These volatile components instead become integral parts of the adhesive through chemical reaction. At least 70 percent of the liquid components of the system, excluding water, react during the process.

Research or laboratory facility means a facility whose primary purpose is for research and development of new processes and products, that is conducted under the close supervision of technically trained personnel, and is not engaged in the manufacture of final or intermediate products for commercial purposes, except in a *de minimis* manner.

Responsible official means responsible official as defined in 40 CFR 70.2.

Startup, initial means the first time equipment is brought online in a facility.

Surface preparation means use of a cleaning material on a portion of or all of a substrate. This includes use of a cleaning material to remove dried coating, which is sometimes called depainting.

Temporary total enclosure means an enclosure constructed for the purpose of measuring the capture efficiency of pollutants emitted from a given source as defined in Method 204 of appendix M, 40 CFR part 51.

Thermoplastic olefin (TPO) means polyolefins (blends of polypropylene, polyethylene and its copolymers). This also includes blends of TPO with polypropylene and polypropylene alloys including, but not limited to, thermoplastic elastomer (TPE), TPE polyurethane (TPU), TPE polyester (TPEE), TPE polyamide (TPAE), and thermoplastic elastomer polyvinyl chloride (TPVC).

Thermoplastic olefin (TPO) coating means any coating operation in which the coatings are components of a system of coatings applied to a TPO substrate, including adhesion promoters, primers, color coatings, clear coatings and topcoats. Thermoplastic olefin coating does not include the coating of TPO substrates on assembled on-road vehicles.

Thinner means an organic solvent that is added to a coating after the coating is received from the supplier.

Total volatile hydrocarbon (TVH) means the total amount of nonaqueous volatile organic matter determined according to Methods 204 and 204A through 204F of appendix M to 40 CFR part 51 and substituting the term TVH each place in the methods where the term VOC is used. The TVH includes both VOC and non-VOC.

Uncontrolled coating operation means a coating operation from which none of the organic HAP emissions are routed

sfrattini on LAPJZKW1R2 with $$_JOB
VerDate Sep<11>2014 09:16 Apr 04, 2023 Jkt 256165 PO 00000 Frm 00971 Fmt 8010 Sfmt 8010 Q:\40\256165.XXX PC31

through an emission capture system and add-on control device.

Volatile organic compound (VOC) means any compound defined as VOC in 40 CFR 51.100(s).

Wastewater means water that is generated in a coating operation and is collected, stored, or treated prior to being discarded or discharged.

[69 FR 20990, Apr. 19, 2004, as amended at 85 FR 41156, July 8, 2020]

TABLE 1 TO SUBPART PPPP OF PART 63—OPERATING LIMITS IF USING THE EMISSION RATE WITH ADD-ON CONTROLS OPTION

If you are required to comply with operating limits by §63.4491(c), you must comply with the applicable operating limits in the following table:

For the following device . . .	You must meet the following operating limit . . .	And you must demonstrate continuous compliance with the operating limit by . . .
1. Thermal oxidizer	a. The average combustion temperature in any 3-hour period must not fall below the combustion temperature limit established according to §63.4567(a).	i. Collecting the combustion temperature data according to §63.4568(c); ii. Reducing the data to 3-hour block averages; and iii. Maintaining the 3-hour average combustion temperature at or above the temperature limit.
2. Catalytic oxidizer	a. The average temperature measured just before the catalyst bed in any 3-hour period must not fall below the limit established according to §63.4567(b); and either	i. Collecting the temperature data according to §63.4568(c); ii. Reducing the data to 3-hour block averages; and iii. Maintaining the 3-hour average temperature before the catalyst bed at or above the temperature limit.
	b. Ensure that the average temperature difference across the catalyst bed in any 3-hour period does not fall below the temperature difference limit established according to §63.4567(b)(2); or	i. Collecting the temperature data according to §63.4568(c); ii. Reducing the data to 3-hour block averages; and iii. Maintaining the 3-hour average temperature difference at or above the temperature difference limit.
	c. Develop and implement an inspection and maintenance plan according to §63.4567(b)(4).	i. Maintaining an up-to-date inspection and maintenance plan, records of annual catalyst activity checks, records of monthly inspections of the oxidizer system, and records of the annual internal inspections of the catalyst bed. If a problem is discovered during a monthly or annual inspection required by §63.4567(b)(4), you must take corrective action as soon as practicable consistent with the manufacturer's recommendations.
3. Regenerative carbon adsorber	a. The total regeneration desorbing gas (*e.g.,* steam or nitrogen) mass flow for each carbon bed regeneration cycle must not fall below the total regeneration desorbing gas mass flow limit established according to §63.4567(c); and	i. Measuring the total regeneration desorbing gas (*e.g.,* steam or nitrogen) mass flow for each regeneration cycle according to §63.4568(d); and ii. Maintaining the total regeneration desorbing gas mass flow at or above the mass flow limit.
	b. The temperature of the carbon bed, after completing each regeneration and any cooling cycle, must not exceed the carbon bed temperature limit established according to §63.4567(c).	i. Measuring the temperature of the carbon bed after completing each regeneration and any cooling cycle according to §63.4568(d); and ii. Operating the carbon beds such that each carbon bed is not returned to service until completing each regeneration and any cooling cycle until the recorded temperature of the carbon bed is at or below the temperature limit.

sfrattini on LAPJZKW1R2 with $$_JOB
VerDate Sep<11>2014 09:16 Apr 04, 2023 Jkt 256165 PO 00000 Frm 00972 Fmt 8010 Sfmt 8002 Q:\40\256165.XXX PC31

For the following device . . .	You must meet the following operating limit . . .	And you must demonstrate continuous compliance with the operating limit by . . .
4. Condenser	a. The average condenser outlet (product side) gas temperature in any 3-hour period must not exceed the temperature limit established according to § 63.4567(d).	i. Collecting the condenser outlet (product side) gas temperature according to § 63.4568(e); ii. Reducing the data to 3-hour block averages; and iii. Maintaining the 3-hour average gas temperature at the outlet at or below the temperature limit.
5. Concentrators, including zeolite wheels and rotary carbon adsorbers.	a. The average gas temperature of the desorption concentrate stream in any 3-hour period must not fall below the limit established according to § 63.4567(e); and	i. Collecting the temperature data according to § 63.4568(f); ii. Reducing the data to 3-hour block averages; and iii. Maintaining the 3-hour average temperature at or above the temperature limit.
	b. The average pressure drop of the dilute stream across the concentrator in any 3-hour period must not fall below the limit established according to § 63.4567(e).	i. Collecting the pressure drop data according to § 63.4568(f); ii. Reducing the pressure drop data to 3-hour block averages; and iii. Maintaining the 3-hour average pressure drop at or above the pressure drop limit.
6. Emission capture system that is a PTE according to § 63.4565(a).	a. The direction of the air flow at all times must be into the enclosure; and either	i. Collecting the direction of air flow, and either the facial velocity of air through all natural draft openings according to § 63.4568(g)(1) or the pressure drop across the enclosure according to § 63.4568(g)(2); and ii. Maintaining the facial velocity of air flow through all natural draft openings or the pressure drop at or above the facial velocity limit or pressure drop limit, and maintaining the direction of air flow into the enclosure at all times.
	b. The average facial velocity of air through all natural draft openings in the enclosure must be at least 200 feet per minute; or	i. *See* items 6.a.i and 6.a.ii.
	c. The pressure drop across the enclosure must be at least 0.007 inch H_2O, as established in Method 204 of appendix M to 40 CFR part 51.	i. *See* items 6.a.i and 6.a.ii.
7. Emission capture system that is not a PTE according to § 63.4565(a).	a. The average gas volumetric flow rate or duct static pressure in each duct between a capture device and add-on control device inlet in any 3-hour period must not fall below the average volumetric flow rate or duct static pressure limit established for that capture device according to § 63.4567(f).	i. Collecting the gas volumetric flow rate or duct static pressure for each capture device according to § 63.4568(g); ii. Reducing the data to 3-hour block averages; and iii. Maintaining the 3-hour average gas volumetric flow rate or duct static pressure for each capture device at or above the gas volumetric flow rate or duct static pressure limit.

Table 2 to Subpart PPPP of Part 63—Applicability of General Provisions to Subpart PPPP of Part 63

You must comply with the applicable General Provisions requirements according to the following table:

Citation	Subject	Applicable to subpart PPPP	Explanation
§ 63.1(a)(1)–(12)	General Applicability	Yes.	
§ 63.1(b)(1)–(3)	Initial Applicability Determination	Yes	Applicability to subpart PPPP is also specified in § 63.4481.
§ 63.1(c)(1)	Applicability After Standard Established.	Yes.	
§ 63.1(c)(2)	Applicability of Permit Program for Area Sources.	No	Area sources are not subject to subpart PPPP.
§ 63.1(c)(5)	Extensions and Notifications	Yes.	
§ 63.1(c)(6)	Reclassification	Yes.	

sfrattini on LAPJZKW1R2 with $$_JOB
VerDate Sep<11>2014 09:16 Apr 04, 2023 Jkt 256165 PO 00000 Frm 00973 Fmt 8010 Sfmt 8002 Q:\40\256165.XXX PC31

Citation	Subject	Applicable to subpart PPPP	Explanation
§ 63.1(e)	Applicability of Permit Program Before Relevant Standard is Set.	Yes.	
§ 63.2	Definitions	Yes	Additional definitions are specified in § 63.4581.
§ 63.3	Units and Abbreviations	Yes.	
§ 63.4(a)(1)–(2)	Prohibited Activities	Yes.	
§ 63.4(b)–(c)	Circumvention/Fragmentation	Yes.	
§ 63.5(a)	Construction/Reconstruction	Yes.	
§ 63.5(b)(1), (3), (4), (6).	Requirements for Existing, Newly Constructed, and Reconstructed Sources.	Yes.	
§ 63.5(d)(1)(i)–(ii)(F), (d)(1)(ii)(H), (d)(1)(ii)(J), (d)(1)(iii), (d)(2)–(4).	Application for Approval of Construction/Reconstruction.	Yes.	
§ 63.5(e)	Approval of Construction/Reconstruction.	Yes.	
§ 63.5(f)	Approval of Construction/Reconstruction Based on Prior State Review.	Yes.	
§ 63.6(a)	Compliance With Standards and Maintenance Requirements—Applicability.	Yes.	
§ 63.6(b)(1)–(5), (b)(7).	Compliance Dates for New and Reconstructed Sources.	Yes	Section 63.4483 specifies the compliance dates.
§ 63.6(c)(1), (2), (5)	Compliance Dates for Existing Sources	Yes	Section 63.4483 specifies the compliance dates.
§ 63.6(e)(1)(i)–(ii)	Operation and Maintenance	Yes before January 5, 2021. No on and after January 5, 2021.	*See* § 63.4500(b) for general duty requirement.
§ 63.6(e)(1)(iii)	Operation and Maintenance	Yes.	
§ 63.6(e)(3)(i), (e)(3)(iii)–(ix).	SSMP	Yes before January 5, 2021. No on and after January 5, 2021.	
§ 63.6(f)(1)	Compliance Except During SSM	Yes before January 5, 2021. No on and after January 5, 2021.	
§ 63.6(f)(2)–(3)	Methods for Determining Compliance	Yes.	
§ 63.6(g)	Use of an Alternative Standard	Yes.	
§ 63.6(h)	Compliance With Opacity/Visible Emission Standards.	No	Subpart PPPP does not establish opacity standards and does not require continuous opacity monitoring systems (COMS).
§ 63.6(i)(1)–(14), (16)	Extension of Compliance	Yes.	
§ 63.6(j)	Presidential Compliance Exemption	Yes.	
§ 63.7(a)(1)	Performance Test Requirements—Applicability.	Yes	Applies to all affected sources. Additional requirements for performance testing are specified in §§ 63.4564, 63.4565, and 63.4566.
§ 63.7(a)(2), except (a)(2)(i)–(viii).	Performance Test Requirements—Dates.	Yes	Applies only to performance tests for capture system and control device efficiency at sources using these to comply with the standards. Section 63.4560 specifies the schedule for performance test requirements that are earlier than those specified in § 63.7(a)(2).
§ 63.7(a)(3)–(4)	Performance Tests Required By the Administrator, Force Majeure.	Yes.	
§ 63.7(b)–(d)	Performance Test Requirements—Notification, Quality Assurance, Facilities Necessary for Safe Testing, Conditions During Test.	Yes	Applies only to performance tests for capture system and add-on control device efficiency at sources using these to comply with the standards.
§ 63.7(e)(1)	Conduct of Performance Tests	Yes before January 5, 2021. No on and after January 5, 2021.	*See* § 63.4500 and § 63.4564(a).
§ 63.7(e)(2)–(4)	Conduct of Performance Tests	Yes.	
§ 63.7(f)	Performance Test Requirements—Use Alternative Test Method.	Yes	Applies to all test methods except those of used to determine capture system efficiency.

sfrattini on LAPJZKW1R2 with $$_JOB
VerDate Sep<11>2014 09:16 Apr 04, 2023 Jkt 256165 PO 00000 Frm 00974 Fmt 8010 Sfmt 8002 Q:\40\256165.XXX PC31

Citation	Subject	Applicable to subpart PPPP	Explanation
§ 63.7(g)–(h)	Performance Test Requirements—Data Analysis, Recordkeeping, Reporting, Waiver of Test.	Yes	Applies only to performance tests for capture system and add-on control device efficiency at sources using these to comply with the standards.
§ 63.8(a)(1)–(2)	Monitoring Requirements—Applicability	Yes	Applies only to monitoring of capture system and add-on control device efficiency at sources using these to comply with the standards. Additional requirements for monitoring are specified in § 63.4568.
§ 63.8(a)(4)	Additional Monitoring Requirements	No	Subpart PPPP does not have monitoring requirements for flares.
§ 63.8(b)	Conduct of Monitoring	Yes.	
§ 63.8(c)(1)	Continuous Monitoring System (CMS) Operation and Maintenance.	Yes before January 5, 2021. No on and after January 5, 2021.	Section 63.4568 specifies the requirements for the operation of CMS for capture systems and add-on control devices at sources using these to comply.
§ 63.8(c)(2)–(3)	CMS Operation and Maintenance	Yes	Applies only to monitoring of capture system and add-on control device efficiency at sources using these to comply with the standard. Additional requirements for CMS operations and maintenance are specified in § 63.4568.
§ 63.8(c)(4)	CMS	No	Section 63.4568 specifies the requirements for the operation of CMS for capture systems and add-on control devices at sources using these to comply.
§ 63.8(c)(5)	COMS	No	Subpart PPPP does not have opacity or visible emission standards.
§ 63.8(c)(6)	CMS Requirements	No	Section 63.4568 specifies the requirements for monitoring systems for capture systems and add-on control devices at sources using these to comply.
§ 63.8(c)(7)	CMS Out-of-Control Periods	Yes.	
§ 63.8(c)(8)	CMS Out-of-Control Periods and Reporting.	No	Section 63.4520 requires reporting of CMS out-of-control periods.
§ 63.8(d)–(e)	Quality Control Program and CMS Performance Evaluation.	No	Subpart PPPP does not require the use of continuous emissions monitoring systems.
§ 63.8(f)(1)–(5)	Use of an Alternative Monitoring Method.	Yes.	
§ 63.8(f)(6)	Alternative to Relative Accuracy Test	No	Subpart PPPP does not require the use of continuous emissions monitoring systems.
§ 63.8(g)	Data Reduction	No	Sections 63.4567 and 63.4568 specify monitoring data reduction.
§ 63.9(a)–(d)	Notification Requirements	Yes.	
§ 63.9(e)	Notification of Performance Test	Yes	Applies only to capture system and add-on control device performance tests at sources using these to comply with the standards.
§ 63.9(f)	Notification of Visible Emissions/Opacity Test.	No	Subpart PPPP does not have opacity or visible emission standards.
§ 63.9(g)	Additional Notifications When Using CMS.	No	Subpart PPPP does not require the use of continuous emissions monitoring systems.
§ 63.9(h)(1)–(3), (5)–(6).	Notification of Compliance Status	Yes	Section 63.4510 specifies the dates for submitting the notification of compliance status.
§ 63.9(i)	Adjustment of Submittal Deadlines	Yes.	
§ 63.9(j)	Change in Previous Information	Yes.	
§ 63.9(k)	Electronic reporting procedures	Yes	Only as specified in § 63.9(j).
§ 63.10(a)	Recordkeeping/Reporting—Applicability and General Information.	Yes.	
§ 63.10(b)(1)	General Recordkeeping Requirements	Yes	Additional requirements are specified in §§ 63.4530 and 63.4531.

sfrattini on LAPJZKW1R2 with $$_JOB
VerDate Sep<11>2014 09:16 Apr 04, 2023 Jkt 256165 PO 00000 Frm 00975 Fmt 8010 Sfmt 8002 Q:\40\256165.XXX PC31

Citation	Subject	Applicable to subpart PPPP	Explanation
§ 63.10(b)(2)(i)–(ii)	Recordkeeping of Occurrence and Duration of Startups and Shutdowns and of Failures to Meet Standards.	Yes before January 5, 2021. No on and after January 5, 2021.	*See* § 63.4530(h).
§ 63.10(b)(2)(iii)	Recordkeeping Relevant to Maintenance of Air Pollution Control and Monitoring Equipment.	Yes.	
§ 63.10(b)(2)(iv)–(v)	Actions Taken to Minimize Emissions During SSM.	Yes before January 5, 2021. No on and after January 5, 2021.	*See* § 63.4530(h)(4) for a record of actions taken to minimize emissions during a deviation from the standard.
§ 63.10(b)(2)(vi)	Recordkeeping for CMS Malfunctions	Yes before January 5, 2021. No on and after January 5, 2021.	*See* § 63.4530(h) for records of periods of deviation from the standard, including instances where a CMS is inoperative or out-of-control.
§ 63.10(b)(2)(vii)–(xii)	Records	Yes.	
§ 63.10(b)(2)(xiii)		No	Subpart PPPP does not require the use of continuous emissions monitoring systems.
§ 63.10(b)(2)(xiv)		Yes.	
§ 63.10(b)(3)	Recordkeeping Requirements for Applicability Determinations.	Yes.	
§ 63.10(c)(1), (5)–(6)	Additional Recordkeeping Requirements for Sources with CMS.	Yes.	
§ 63.10(c)(7)–(8)	Additional Recordkeeping Requirements for Sources with CMS.	No	*See* § 63.4530(h) for records of periods of deviation from the standard, including instances where a CMS is inoperative or out-of-control.
§ 63.10(c)(10)–(14)	Additional Recordkeeping Requirements for Sources with CMS.	Yes.	
§ 63.10(c)(15)	Records Regarding the SSMP	Yes before January 5, 2021. No on and after January 5, 2021.	
§ 63.10(d)(1)	General Reporting Requirements	Yes	Additional requirements are specified in § 63.4520.
§ 63.10(d)(2)	Report of Performance Test Results	Yes	Additional requirements are specified in § 63.4520(b).
§ 63.10(d)(3)	Reporting Opacity or Visible Emissions Observations.	No	Subpart PPPP does not require opacity or visible emissions observations.
§ 63.10(d)(4)	Progress Reports for Sources With Compliance Extensions.	Yes.	
§ 63.10(d)(5)	SSM Reports	Yes before January 5, 2021. No on and after January 5, 2021.	*See* § 63.4520(a)(7).
§ 63.10(e)(1)–(2)	Additional CMS Reports	No	Subpart PPPP does not require the use of continuous emissions monitoring systems.
§ 63.10(e)(3)	Excess Emissions/CMS Performance Reports.	No	Section 63.4520(b) specifies the contents of periodic compliance reports.
§ 63.10(e)(4)	COMS Data Reports	No	Subpart PPPP does not specify requirements for opacity or COMS.
§ 63.10(f)	Recordkeeping/Reporting Waiver	Yes.	
§ 63.11	Control Device Requirements/Flares	No	Subpart PPPP does not specify use of flares for compliance.
§ 63.12	State Authority and Delegations	Yes.	
§ 63.13	Addresses	Yes.	
§ 63.14	IBR	Yes.	
§ 63.15	Availability of Information/Confidentiality.	Yes.	

[85 FR 41156, July 8, 2020, as amended at 85 FR 73907, Nov. 19, 2020]

TABLE 3 TO SUBPART PPPP OF PART 63—DEFAULT ORGANIC HAP MASS FRACTION FOR SOLVENTS AND SOLVENT BLENDS

You may use the mass fraction values in the following table for solvent blends for which you do not have test data or manufacturer's formulation data and which match either the solvent blend name or the chemical abstract series (CAS) number. If a solvent blend matches both the name and CAS number for an entry, that entry's organic HAP mass fraction must

sfrattini on LAPJZKW1R2 with $$_JOB
VerDate Sep<11>2014 09:16 Apr 04, 2023 Jkt 256165 PO 00000 Frm 00976 Fmt 8010 Sfmt 8026 Q:\40\256165.XXX PC31

be used for that solvent blend. Otherwise, use the organic HAP mass fraction for the entry matching either the solvent blend name or CAS number, or use the organic HAP mass fraction from table 4 to this subpart if neither the name or CAS number match.

Solvent/solvent blend	CAS. No.	Average organic HAP mass fraction	Typical organic HAP, percent by mass
1. Toluene	108–88–3	1.0	Toluene.
2. Xylene(s)	1330–20–7	1.0	Xylenes, ethylbenzene.
3. Hexane	110–54–3	0.5	n-hexane.
4. n-Hexane	110–54–3	1.0	n-hexane.
5. Ethylbenzene	100–41–4	1.0	Ethylbenzene.
6. Aliphatic 140		0	None.
7. Aromatic 100		0.02	1% xylene, 1% cumene.
8. Aromatic 150		0.09	Naphthalene.
9. Aromatic naphtha	64742–95–6	0.02	1% xylene, 1% cumene.
10. Aromatic solvent	64742–94–5	0.1	Naphthalene.
11. Exempt mineral spirits	8032–32–4	0	None.
12. Ligroines (VM & P)	8032–32–4	0	None.
13. Lactol spirits	64742–89–6	0.15	Toluene.
14. Low aromatic white spirit	64742–82–1	0	None.
15. Mineral spirits	64742–88–7	0.01	Xylenes.
16. Hydrotreated naphtha	64742–48–9	0	None.
17. Hydrotreated light distillate	64742–47–8	0.001	Toluene.
18. Stoddard solvent	8052–41–3	0.01	Xylenes.
19. Super high-flash naphtha	64742–95–6	0.05	Xylenes.
20. Varsol® solvent	8052–49–3	0.01	0.5% xylenes, 0.5% ethylbenzene.
21. VM & P naphtha	64742–89–8	0.06	3% toluene, 3% xylene.
22. Petroleum distillate mixture	68477–31–6	0.08	4% naphthalene, 4% biphenyl.

TABLE 4 TO SUBPART PPPP OF PART 63—DEFAULT ORGANIC HAP MASS FRACTION FOR PETROLEUM SOLVENT GROUPS [A]

You may use the mass fraction values in the following table for solvent blends for which you do not have test data or manufacturer's formulation data.

Solvent type	Average organic HAP mass fraction	Typical organic HAP, percent by mass
Aliphatic [b]	0.03	1% Xylene, 1% Toluene, and 1% Ethylbenzene.
Aromatic [c]	0.06	4% Xylene, 1% Toluene, and 1% Ethylbenzene.

[a] Use this table only if the solvent blend does not match any of the solvent blends in Table 3 to this subpart by either solvent blend name or CAS number and you only know whether the blend is aliphatic or aromatic.
[b] Mineral Spirits 135, Mineral Spirits 150 EC, Naphtha, Mixed Hydrocarbon, Aliphatic Hydrocarbon, Aliphatic Naphtha, Naphthol Spirits, Petroleum Spirits, Petroleum Oil, Petroleum Naphtha, Solvent Naphtha, Solvent Blend.
[c] Medium-flash Naphtha, High-flash Naphtha, Aromatic Naphtha, Light Aromatic Naphtha, Light Aromatic Hydrocarbons, Aromatic Hydrocarbons, Light Aromatic Solvent.

TABLE 5 TO SUBPART PPPP OF PART 63—LIST OF HAP THAT MUST BE COUNTED TOWARD TOTAL ORGANIC HAP CONTENT IF PRESENT AT 0.1 PERCENT OR MORE BY MASS

Chemical name	CAS No.
1,1,2,2-Tetrachloroethane	79–34–5
1,1,2-Trichloroethane	79–00–5
1,1-Dimethylhydrazine	57–14–7
1,2-Dibromo-3-chloropropane	96–12–8
1,2-Diphenylhydrazine	122–66–7
1,3-Butadiene	106–99–0
1,3-Dichloropropene	542–75–6
1,4-Dioxane	123–91–1
2,4,6-Trichlorophenol	88–06–2
2,4/2,6-Dinitrotoluene (mixture)	25321–14–6
2,4-Dinitrotoluene	121–14–2
2,4-Toluene diamine	95–80–7
2-Nitropropane	79–46–9
3,3′-Dichlorobenzidine	91–94–1
3,3′-Dimethoxybenzidine	119–90–4

sfrattini on LAPJZKW1R2 with $$_JOB
VerDate Sep<11>2014 09:16 Apr 04, 2023 Jkt 256165 PO 00000 Frm 00977 Fmt 8010 Sfmt 8002 Q:\40\256165.XXX PC31

Chemical name	CAS No.
3,3′-Dimethylbenzidine	119–93–7
4,4′-Methylene bis(2-chloroaniline)	101–14–4
Acetaldehyde	75–07–0
Acrylamide	79–06–1
Acrylonitrile	107–13–1
Allyl chloride	107–05–1
alpha-Hexachlorocyclohexane (a-HCH)	319–84–6
Aniline	62–53–3
Benzene	71–43–2
Benzidine	92–87–5
Benzotrichloride	98–07–7
Benzyl chloride	100–44–7
beta-Hexachlorocyclohexane (b-HCH)	319–85–7
Bis(2-ethylhexyl)phthalate	117–81–7
Bis(chloromethyl)ether	542–88–1
Bromoform	75–25–2
Captan	133–06–2
Carbon tetrachloride	56–23–5
Chlordane	57–74–9
Chlorobenzilate	510–15–6
Chloroform	67–66–3
Chloroprene	126–99–8
Cresols (mixed)	1319–77–3
DDE	3547–04–4
Dichloroethyl ether	111–44–4
Dichlorvos	62–73–7
Epichlorohydrin	106–89–8
Ethyl acrylate	140–88–5
Ethylene dibromide	106–93–4
Ethylene dichloride	107–06–2
Ethylene oxide	75–21–8
Ethylene thiourea	96–45–7
Ethylidene dichloride (1,1-Dichloroethane)	75–34–3
Formaldehyde	50–00–0
Heptachlor	76–44–8
Hexachlorobenzene	118–74–1
Hexachlorobutadiene	87–68–3
Hexachloroethane	67–72–1
Hydrazine	302–01–2
Isophorone	78–59–1
Lindane (hexachlorocyclohexane, all isomers)	58–89–9
m-Cresol	108–39–4
Methylene chloride	75–09–2
Naphthalene	91–20–3
Nitrobenzene	98–95–3
Nitrosodimethylamine	62–75–9
o-Cresol	95–48–7
o-Toluidine	95–53–4
Parathion	56–38–2
p-Cresol	106–44–5
p-Dichlorobenzene	106–46–7
Pentachloronitrobenzene	82–68–8
Pentachlorophenol	87–86–5
Propoxur	114–26–1
Propylene dichloride	78–87–5
Propylene oxide	75–56–9
Quinoline	91–22–5
Tetrachloroethene	127–18–4
Toxaphene	8001–35–2
Trichloroethylene	79–01–6
Trifluralin	1582–09–8
Vinyl bromide	593–60–2
Vinyl chloride	75–01–4
Vinylidene chloride	75–35–4

[85 FR 41160, July 8, 2020]

sfrattini on LAPJZKW1R2 with $$_JOB
VerDate Sep<11>2014 09:16 Apr 04, 2023 Jkt 256165 PO 00000 Frm 00978 Fmt 8010 Sfmt 8026 Q:\40\256165.XXX PC31

APPENDIX A TO SUBPART PPPP OF PART 63—DETERMINATION OF WEIGHT VOLATILE MATTER CONTENT AND WEIGHT SOLIDS CONTENT OF REACTIVE ADHESIVES

1.0 APPLICABILITY AND PRINCIPLE

1.1 *Applicability:* This method applies to the determination of weight volatile matter content and weight solids content for most one-part or multiple-part reactive adhesives. Reactive adhesives are composed, in large part, of monomers that react during the adhesive curing reaction, and, as a result, do not volatilize. The monomers become integral parts of the cured adhesive through chemical reaction. At least 70 weight percent of the system, excluding water and non-volatile solids such as fillers, react during the process. This method is not appropriate for cyanoacrylates. For cyanoacrylates, South Coast Air Quality Management District Test Method 316B should be used. This method is not appropriate for one-part moisture cure urethane adhesives or for silicone adhesives. For one-part moisture cure urethane adhesives and for silicone adhesives, EPA Method 24 should be used.

1.2 Principle: One-part and multiple-part reactive adhesives undergo a reactive conversion from liquid to solid during the application and assembly process. Reactive adhesives are applied to a single surface, but then are usually quickly covered with another mating surface to achieve a bonded assembly. The monomers employed in such systems typically react and are converted to non-volatile solids. If left uncovered, as in a EPA Method 24 (or ASTM D2369–10 (Reapproved 2015)[e]) test, the reaction is inhibited by the presence of oxygen and volatile loss of the reactive components competes more heavily with the cure reaction. If this were to happen under normal use conditions, the adhesives would not provide adequate performance. This method minimizes this undesirable deterioration of the adhesive performance.

2.0 MATERIALS AND APPARATUS

2.1 Aluminum foil, aluminum sheet, non-leaching plastic film or non-leaching plastic sheet, approximately 3 inches by 3 inches. Precondition the foil, film, or sheet for 30 minutes in an oven at 110 ±5 degrees Celsius and store in a desiccator prior to use. Use tongs or rubber gloves or both to handle the foil, film, or sheet.

2.2 Flat, rigid support panels slightly larger than the foil, film, or sheet. Polypropylene with a minimum thickness of ⅛ inch is recommended for the support panels. Precondition the support panels for 30 minutes in an oven at 110 ±5 degrees Celsius and store in a desiccator prior to use. Use tongs or rubber gloves or both to handle the support panels.

2.3 Aluminum spacers, ⅛ inch thick. Precondition the spacers for 30 minutes in an oven at 110 ±5 degrees Celsius and store in a desiccator prior to use. Use tongs or rubber gloves or both to handle the spacers.

2.4 Forced draft oven, type IIA or IIB as specified in ASTM E145–94 (Reapproved 2001), ''Standard Specification for Gravity-Convection and Forced-Ventilation Ovens'' (incorporated by reference, see § 63.14).

2.5 Electronic balance capable of weighing to ±0.0001 grams (0.1 mg).

2.6 Flat bottom weight (approximately 3 lbs) or clamps.

Material and Apparatus Notes

1—The foil, film, or sheet should be thick or rigid enough so that it can be easily handled in the test procedure.

3.0 PROCEDURE

3.1 Two procedures are provided. In Procedure A the initial specimen weight is determined by weighing the foil, film, or sheet before and after the specimen is dispensed onto the foil, film, or sheet. In Procedure B the initial specimen weight is determined by weighing the adhesive cartridge (kit) before and after the specimen is dispensed.

3.2 At least four test specimens should be run for each test material. Run the test at room temperature, 74 degrees Fahrenheit (23 degrees Celsius).

Procedure A

1. Zero electronic balance.
2. Place 2 pieces of aluminum foil (or aluminum sheet, plastic film, or plastic sheet) on scale.
3. Record weight of aluminum foils. (A).
4. Tare balance.
5. Remove top piece of aluminum foil.
6. Dispense a 10 to 15 gram specimen of premixed adhesive onto bottom piece of aluminum foil. Place second piece of aluminum foil on top of the adhesive specimen to make a sandwich.
7. Record weight of sandwich (specimen and aluminum foils). (B).
8. Remove sandwich from scale, place sandwich between two support panels with aluminum spacers at the edges of the support panels to make a supported sandwich. The spacers provide a standard gap. Take care to mate the edges.
9. Place the supported sandwich on a flat surface.
10. Place the weight on top of the supported sandwich to spread the adhesive specimen to a uniform thickness within the sandwich. Check that no adhesive squeezes out from between the pieces of aluminum foil or through tears in the aluminum foil.
11. Allow to cure 24 hours.

sfrattini on LAPJZKW1R2 with $$_JOB
VerDate Sep<11>2014 09:16 Apr 04, 2023 Jkt 256165 PO 00000 Frm 00979 Fmt 8010 Sfmt 8002 Q:\40\256165.XXX PC31

12. Remove the sandwich from between the support panels. Record the weight of the sandwich. This is referred to as the 24 hr weight. (C).

13. Bake sandwich at 110 degrees Celsius for 1 hour.

14. Remove sandwich from the oven, place immediately in a desiccator, and cool to room temperature. Record post bake sandwich weight. (D).

Procedure B

1. Zero electronic balance.

2. Place two pieces of aluminum foil (or aluminum sheet, plastic film, or plastic sheet) on scale.

3. Record weight of aluminum foils. (A).

4. Tare balance.

5. Place one support panel on flat surface. Place first piece of aluminum foil on top of this support panel.

6. Record the weight of a pre-mixed sample of adhesive in its container. If dispensing the adhesive from a cartridge (kit), record the weight of the cartridge (kit) plus any dispensing tips. (F).

7. Dispense a 10 to 15 gram specimen of mixed adhesive onto the first piece of aluminum foil. Place second piece of aluminum foil on top of the adhesive specimen to make a sandwich.

8. Record weight of the adhesive container. If dispensing the adhesive from a cartridge (kit), record the weight of the cartridge (kit) plus any dispensing tips. (G).

9. Place the aluminum spacers at the edges of the bottom support panel polypropylene sheet. The spacers provide a standard gap.

10. Place the second support panel on top of the assembly to make a supported sandwich. Take care to mate the edges.

11. Place the supported sandwich on a flat surface.

12. Place the weight on top of the supported sandwich to spread the adhesive specimen to a uniform thickness within the sandwich. Check that no adhesive squeezes out from between the pieces of aluminum foil or through tears in the aluminum foil.

13. Allow to cure 24 hours.

14. Remove the sandwich from between the support panels. Record the weight of the sandwich. This is referred to as the 24 hr weight. (C).

15. Bake sandwich at 110 degrees Celsius for 1 hour.

16. Remove sandwich from the oven, place immediately in a desiccator, and cool to room temperature.

17. Record post-bake sandwich weight. (D).

Procedural Notes

1—The support panels may be omitted if the aluminum foil (or aluminum sheet, plastic film, or plastic sheet) will not tear and the adhesive specimen will spread to a uniform thickness within the sandwich when the flat weight is placed directly on top of the sandwich.

2—Clamps may be used instead of a flat bottom weight to spread the adhesive specimen to a uniform thickness within the sandwich.

3—When dispensing from a static mixer, purging is necessary to ensure uniform, homogeneous specimens. The weighing in Procedure B, Step 6 must be performed after any purging.

4—Follow the adhesive manufacturer's directions for mixing and for dispensing from a cartridge (kit).

4.0 CALCULATIONS

4.1 The total weight loss from curing and baking of each specimen is used to determine the weight percent volatile matter content of that specimen

Procedure A

Weight of original specimen (S) = (B) − (A)
Weight of post-bake specimen (P) = (D) − (A)
Total Weight Loss (L) = (S) − (P)

Procedure B

Weight of original specimen (S) = (F) − (G)
Weight of post-bake specimen (P) = (D) − (A)
Total Weight Loss (L) = (S) − (P)

Procedure A and Procedure B

Weight Percent Volatile Matter Content

(V) = [(Total weight loss)/(Initial specimen weight)] × 100 = [(L)/(S)] × 100

4.2 The weight volatile matter content of a material is the average of the weight volatile matter content of each specimen of that material. For example, if four specimens of a material were tested, then the weight percent volatile matter content for that material is:

V = [V1 + V2 + V3 + V4]/4

Where:

Vi = the weight percent volatile matter content of specimen i of the material.

4.3 The weight percent solids content of the material is calculated from the weight percent volatile content of the material.

Weight Percent Solids Content (N) = 100 − (V)

Calculation Notes

1—The weight loss during curing and the weight loss during baking may be calculated separately. These values may be useful for identifying sources of variation in the results obtained for different specimens of the same material.

2—For both Procedure A and Procedure B, the weight loss during curing is

sfrattini on LAPJZKW1R2 with $$_JOB
VerDate Sep<11>2014 09:16 Apr 04, 2023 Jkt 256165 PO 00000 Frm 00980 Fmt 8010 Sfmt 8002 Q:\40\256165.XXX PC31

(S) − [(C) − (A)] and the weight loss during baking is (C) − (D).

[69 FR 20990, Apr. 19, 2004, as amended at 85 FR 41161, July 8, 2020]

Subpart QQQQ—National Emission Standards for Hazardous Air Pollutants: Surface Coating of Wood Building Products

SOURCE: 68 FR 31760, May 28, 2003, unless otherwise noted.

WHAT THIS SUBPART COVERS

§ 63.4680 What is the purpose of this subpart?

This subpart establishes national emission standards for hazardous air pollutants (NESHAP) for wood building products surface coating sources. This subpart also establishes requirements to demonstrate initial and continuous compliance with the emission limitations.

§ 63.4681 Am I subject to this subpart?

(a) Except as provided in paragraphs (c) and (d) of this section, the source category to which this subpart applies is surface coating of wood building products, which means the application of coatings using, for example, roll coaters or curtain coaters in the finishing or laminating of any wood building product that contains more than 50 percent by weight wood or wood fiber excluding the weight of any glass components, and is used in the construction, either interior or exterior, of a residential, commercial, or institutional building. The wood building products source category includes the subcategories listed in paragraphs (a)(1) through (5) of this section.

(1) *Doors, windows, and miscellaneous.* The doors, windows, and miscellaneous subcategory includes doors, windows, finished doorskins, and door and window components such as millwork, moulding, or trim, and other miscellaneous wood building products including, but not limited to, all moulding and trim, shingles, and shutters.

(2) *Flooring.* The flooring subcategory includes solid wood flooring, engineered wood flooring, and wood laminate flooring.

(3) *Interior wall paneling and tileboard.* The interior wall paneling and tileboard subcategory includes interior wall paneling products. Tileboard is a premium interior wall paneling product.

(4) *Other interior panels.* The other interior panel subcategory includes panels that are sold for uses other than interior wall paneling, such as coated particleboard, hardboard, and perforated panels.

(5) *Exterior siding and primed doorskins.* The exterior siding and primed doorskins subcategory includes lap or panel siding, trimboard, and primed doorskins. Doorskins that are coated with more than primer are included in the doors, windows, and miscellaneous subcategory.

(b) You are subject to this subpart if you own or operate a new, reconstructed, or existing affected source, as defined in § 63.4682, that uses 4,170 liters (1,100 gallons) per year, or more, of coatings in the source category defined in paragraph (a) of this section and that is a major source, is located at a major source, or is part of a major source of emissions of hazardous air pollutants (HAP). A major source of HAP emissions is any stationary source or group of stationary sources located within a contiguous area and under common control that emits or has the potential to emit any single HAP at a rate of 9.07 megagrams (Mg) (10 tons) or more per year or any combination of HAP at a rate of 22.68 Mg (25 tons) or more per year.

(c) This subpart does not apply to surface coating and other operations that meet the criteria of paragraphs (c)(1) through (5) of this section.

(1) Surface coating in the processes identified in paragraphs (c)(1)(i) through (xi) of this section that are part of plywood and composite wood product manufacturing and subject to subpart DDDD of this part including:

(i) Edge seals applied to a reconstituted wood product or plywood.

(ii) Anti-skid coatings applied to reconstituted wood products.

(iii) Primers applied to waferboard or oriented strand board (OSB) siding at the site of manufacture of the waferboard or OSB siding.

sfrattini on LAPJZKW1R2 with $$_JOB
VerDate Sep<11>2014 09:16 Apr 04, 2023 Jkt 256165 PO 00000 Frm 00981 Fmt 8010 Sfmt 8010 Q:\40\256165.XXX PC31

(iv) Surface coating that occurs during the manufacture of fiberboard, including application of clay slurry, titanium dioxide, or asphalt coatings to fiberboard.

(v) Painting of company logo information on plywood or reconstituted wood products.

(vi) Application of trademarks and grade stamp to reconstituted wood products or plywood.

(vii) Application of nail lines to reconstituted wood products.

(viii) Synthetic patches, wood patches, and wood putty applied to plywood.

(ix) Application of concrete forming and other drying or tempering oils to wood building products.

(x) Veneer composing.

(xi) Application of shelving edge fillers to reconstituted wood products.

(2) Surface coating of wood furniture subject to subpart JJ of this part, including finishing, gluing, cleaning, and washoff operations associated with the production of wood furniture or wood furniture components. The surface coating of millwork and trim associated with cabinet manufacturing is also subject to subpart JJ of this part and not to this subpart.

(3) Surface coating that occurs during the manufacture of prefabricated homes and mobile/modular homes.

(4) Surface coating that occurs at research or laboratory facilities; janitorial, building, and facility construction or maintenance operations; or hobby shops that are operated for personal rather than for commercial purposes. The source category also does not include non-commercial coating operations or coating applications using handheld nonrefillable aerosol containers.

(5) Wood treatment or fire retardant operations located at wood building products sources that involve impregnating the wood product with the wood treatment chemicals or fire retardant by using a retort or other pressure vessel.

(d) If you have an affected source with surface coating operations subject to the requirements of another subpart of this part that account for at least 95 percent of the total (annual) coating usage for the affected source, you may demonstrate compliance with the requirements, including all applicable emission limit(s), for that subpart for the entire affected source.

[68 FR 31760, May 28, 2003, as amended at 84 FR 7698, Mar. 4, 2019]

§ 63.4682 What parts of my plant does this subpart cover?

(a) This subpart applies to each new, reconstructed, and existing affected source.

(b) The affected source is the collection of all of the items listed in paragraphs (b)(1) through (4) of this section that are used for surface coating of wood building products:

(1) All coating operations as defined in § 63.4781;

(2) All storage containers and mixing vessels in which coatings, thinners, and cleaning materials are stored or mixed;

(3) All manual and automated equipment and containers used for conveying coatings, thinners, and cleaning materials; and

(4) All storage containers and all manual and automated equipment and containers used for conveying waste materials generated by a coating operation.

(c) An affected source is a new affected source if its construction commenced after June 21, 2002, and the construction is of a completely new wood building products surface coating source where previously no wood building products surface coating source had existed.

(d) An affected source is reconstructed if you meet the criteria as defined in § 63.2.

(e) An affected source is existing if it is not new or reconstructed.

§ 63.4683 When do I have to comply with this subpart?

The date by which you must comply with this subpart is called the compliance date. The compliance date for each type of affected source is specified in paragraphs (a) through (c) of this section. The compliance date begins the initial compliance period during which you conduct the initial compliance demonstration described in §§ 63.4740, 63.4750, and 63.4760.

(a) For a new or reconstructed affected source, the compliance date is

sfrattini on LAPJZKW1R2 with $$_JOB
VerDate Sep<11>2014 09:16 Apr 04, 2023 Jkt 256165 PO 00000 Frm 00982 Fmt 8010 Sfmt 8010 Q:\40\256165.XXX PC31

the applicable date in paragraph (a)(1) or (2) of this section:

(1) If the initial startup of your new or reconstructed affected source is before May 28, 2003, the compliance date is May 28, 2003; except that the compliance date for the revised requirements promulgated at §§ 63.4700, 63.4710, 63.4720, 63.4730, 63.4741, 63.4751, 63.4752, 63.4761, 63.4763, 63.4764, 63.4766, 63.4781, table 4 of this subpart QQQQ, and appendix A to 40 CFR part 63 is September 3, 2019.

(2) If the initial startup of your new or reconstructed affected source occurs after May 28, 2003, the compliance date is March 4, 2019 or the date of initial startup of your affected source, whichever is later; except that if you commenced construction or reconstruction of your new or reconstructed affected source after May 28, 2003, but on or before May 16, 2018, the compliance date for the revised requirements promulgated at §§ 63.4700, 63.4710, 63.4720, 63.4730, 63.4741, 63.4751, 63.4752, 63.4761, 63.4763, 63.4764, 63.4766, 63.4781, table 4 of this subpart QQQQ, and appendix A to 40 CFR part 63 is September 3, 2019.

(b) For an existing affected source, the compliance date is the date 3 years after May 28, 2003, except that the compliance date for the revised requirements promulgated at §§ 63.4700, 63.4710, 63.4720, 63.4730, 63.4741, 63.4751, 63.4752, 63.4761, 63.4763, 63.4764, 63.4766, 63.4781, table 4 of this subpart QQQQ of part 63, and appendix A to 40 CFR part 63 is September 3, 2019.

(c) For an area source that increases its emissions or its potential to emit such that it becomes a major source of HAP emissions, the compliance date is specified in paragraphs (c)(1) and (2) of this section.

(1) For any portion of the source that becomes a new or reconstructed affected source subject to this subpart, the compliance date is the date of initial startup of the affected source or May 28, 2003, whichever is later.

(2) For any portion of the source that becomes an existing affected source subject to this subpart, the compliance date is the date 1 year after the area source becomes a major source or 3 years after May 28, 2003, whichever is later.

(d) You must meet the notification requirements in § 63.4710 according to the dates specified in that section and in subpart A of this part. Some of the notifications must be submitted before the compliance dates described in paragraphs (a) through (c) of this section.

[68 FR 31760, May 28, 2003, as amended at 84 FR 7698, Mar. 4, 2019]

EMISSION LIMITATIONS

§ 63.4690 What emission limits must I meet?

(a) For a new or reconstructed affected source, you must limit organic HAP emissions to the atmosphere to no more than the applicable emission limit(s) in Table 1 to this subpart, determined according to the requirements in § 63.4741, § 63.4751, or § 63.4761.

(b) For an existing affected source, you must limit organic HAP emissions to the atmosphere to no more than the applicable emission limit(s) in Table 2 to this subpart, determined according to the requirements in § 63.4741, § 63.4751, or § 63.4761.

(c) If the affected source applies coatings to products that are in different subcategories as described in § 63.4681(a), then you must demonstrate initial and continuous compliance by selecting one of the approaches described in paragraphs (c)(1) and (2) of this section.

(1) Conduct separate compliance demonstrations for each applicable subcategory emission limit and reflect these separate determinations in notifications, reports, and records required by §§ 63.4710, 63.4720, and 63.4730, respectively.

(2) Demonstrate compliance with the most stringent of the applicable subcategory emission limits.

§ 63.4691 What are my options for meeting the emission limits?

You must include all coatings, thinners, and cleaning materials used in the affected source when determining whether the organic HAP emission rate is equal to or less than the applicable emission limit in § 63.4690. To make this determination, you must use at least one of the three compliance options listed in paragraphs (a) through (c) of this section. You may apply any

sfrattini on LAPJZKW1R2 with $$_JOB
VerDate Sep<11>2014 09:16 Apr 04, 2023 Jkt 256165 PO 00000 Frm 00983 Fmt 8010 Sfmt 8010 Q:\40\256165.XXX PC31

of the compliance options to an individual coating operation or to multiple coating operations as a group or to the entire affected source. You may use different compliance options for different coating operations or at different times on the same coating operation. However, you may not use different compliance options at the same time on the same coating operation. If you switch between compliance options for any coating operation or group of coating operations, you must document this switch as required by § 63.4730(c), and you must report it in the next semiannual compliance report required in § 63.4720.

(a) *Compliant material option.* Demonstrate that the organic HAP content of each coating used in the coating operation(s) is less than or equal to the applicable emission limit(s) in § 63.4690, and that each thinner and each cleaning material used contains no organic HAP. You must meet all the requirements of §§ 63.4740, 63.4741, and 63.4742 to demonstrate compliance with the emission limit using this option.

(b) *Emission rate without add-on controls option.* Demonstrate that, based on the coatings, thinners, and cleaning materials used in the coating operation(s), the organic HAP emission rate for the coating operation(s) is less than or equal to the applicable emission limit(s) in § 63.4690, calculated as a rolling 12-month emission rate and determined on a monthly basis. You must meet all the requirements of §§ 63.4750, 63.4751, and 63.4752 to demonstrate compliance with the emission limit using this option.

(c) *Emission rate with add-on controls option.* Demonstrate that, based on the coatings, thinners, and cleaning materials used in the coating operation(s) and the emission reductions achieved by emission capture systems and add-on controls, the organic HAP emission rate for the coating operation(s) is less than or equal to the applicable emission limit(s) in § 63.4690, calculated as a rolling 12-month emission rate and determined on a monthly basis. If you use this compliance option, you must also demonstrate that all emission capture systems and add-on control devices for the coating operation(s) meet the operating limits required in § 63.4692, except for solvent recovery systems for which you conduct liquid-liquid material balances according to § 63.4761(j), and that you meet the work practice standards required in § 63.4693. You must meet all the requirements of §§ 63.4760 through 63.4768 to demonstrate compliance with the emission limits, operating limits, and work practice standards using this option.

§ 63.4692 What operating limits must I meet?

(a) For any coating operation(s) on which you use the compliant material option or the emission rate without add-on controls option, you are not required to meet any operating limits.

(b) For any controlled coating operation(s) on which you use the emission rate with add-on controls option, except those for which you use a solvent recovery system and conduct a liquid-liquid material balance according to § 63.4761(j), you must meet the operating limits specified in Table 3 to this subpart. These operating limits apply to the emission capture and control systems on the coating operation(s) for which you use this option, and you must establish the operating limits during the performance test according to the requirements in § 63.4767. You must meet the operating limits at all times after you establish them.

(c) If you use an add-on control device other than those listed in Table 3 to this subpart, or wish to monitor an alternative parameter and comply with a different operating limit, you must apply to the Administrator for approval of alternative monitoring under § 63.8(f).

§ 63.4693 What work practice standards must I meet?

(a) For any coating operation(s) on which you use the compliant material option or the emission rate without add-on controls option, you are not required to meet any work practice standards.

(b) If you use the emission rate with add-on controls option, you must develop and implement a work practice plan to minimize organic HAP emissions from the storage, mixing, and conveying of coatings, thinners, and cleaning materials used in, and waste

sfrattini on LAPJZKW1R2 with $$_JOB
VerDate Sep<11>2014 09:16 Apr 04, 2023 Jkt 256165 PO 00000 Frm 00984 Fmt 8010 Sfmt 8010 Q:\40\256165.XXX PC31

materials generated by, the coating operation(s); or you must meet an alternative standard as provided in paragraph (d) of this section. The plan must specify practices and procedures to ensure that, at a minimum, the elements specified in paragraphs (b)(1) through (5) of this section are implemented. You must make the plan available upon request for inspection by the Administrator.

(1) All organic-HAP coatings, thinners, cleaning materials, and waste materials must be stored in closed containers.

(2) Spills of organic-HAP coatings, thinners, cleaning materials, and waste materials must be minimized.

(3) Organic-HAP coatings, thinners, cleaning materials, and waste materials must be conveyed from one location to another in closed containers or pipes.

(4) Mixing vessels that contain organic-HAP coatings and other materials must be closed except when adding to, removing, or mixing the contents.

(5) Emissions of organic-HAP must be minimized during cleaning of storage, mixing, and conveying equipment.

(c) If your affected source has an existing documented plan that incorporates steps taken to minimize emissions from the sources specified in paragraphs (b)(1) through (5) of this section, then your existing plan can be used to meet the requirement for a work practice plan as specified in paragraph (b) of this section.

(d) As provided in § 63.6(g), we, the U.S. Environmental Protection Agency (U.S. EPA), may choose to grant you permission to use an alternative to the work practice standards in this section.

GENERAL COMPLIANCE REQUIREMENTS

§ 63.4700 What are my general requirements for complying with this subpart?

(a) You must be in compliance with the emission limitations in this subpart as specified in paragraphs (a)(1) and (2) of this section.

(1) Any coating operation(s) for which you use the compliant material option or the emission rate without add-on controls option, as specified in § 63.4691(a) and (b), must be in compliance with the applicable emission limit in § 63.4690 at all times.

(2) Any coating operation(s) at existing sources for which you use the emission rate with add-on controls option, as specified in § 63.4691(c), must be in compliance with the applicable emission limitations as specified in paragraphs (a)(2)(i) through (iii) of this section.

(i) Before September 3, 2019, the coating operation(s) must be in compliance with the applicable emission limit in § 63.4690 at all times, except during periods of startup, shutdown, and malfunction (SSM). On and after September 3, 2019, the coating operation(s) must be in compliance with the applicable emission limit in § 63.4690 at all times.

(ii) Before September 3, 2019, the coating operation(s) must be in compliance with the applicable operating limits for emission capture systems and add-on control devices required by § 63.4692 at all times, except during periods of SSM, and except for solvent recovery systems for which you conduct liquid-liquid material balances according to § 63.4761(j). On and after September 3, 2019, the coating operation(s) must be in compliance with the operating limits for emission capture systems and add-on control devices required by § 63.4692 at all times, except for solvent recovery systems for which you conduct liquid-liquid material balances according to § 63.4761(j).

(iii) The coating operation(s) must be in compliance with the work practice standards in § 63.4693 at all times.

(3) For new or reconstructed sources with initial startup after May 16, 2018, any coating operation(s) for which you use the emission rate with add-on controls option, as specified in § 63.4691(c), must be in compliance with the applicable emission limitations and work practice standards as specified in paragraphs (a)(3)(i) through (iii) of this section.

(i) The coating operation(s) must be in compliance with the applicable emission limit in § 63.4690 at all times.

(ii) The coating operation(s) must be in compliance with the operating limits for emission capture systems and add-on control devices required by

sfrattini on LAPJZKW1R2 with $$_JOB
VerDate Sep<11>2014 09:16 Apr 04, 2023 Jkt 256165 PO 00000 Frm 00985 Fmt 8010 Sfmt 8010 Q:\40\256165.XXX PC31

§ 63.4692 at all times, except for solvent recovery systems for which you conduct liquid-liquid material balances according to § 63.4761(j).

(iii) The coating operation(s) must be in compliance with the work practice standards in § 63.4693 at all times.

(b) For existing sources as of March 4, 2019, before September 3, 2019, you must always operate and maintain your affected source, including all air pollution control and monitoring equipment you use for purposes of complying with this subpart, according to the provisions in § 63.6(e)(1)(i). On and after September 3, 2019 for such existing sources and after March 4, 2019 for new or reconstructed sources, you must always operate and maintain your affected source, including associated air pollution control equipment and monitoring equipment, in a manner consistent with safety and good air pollution control practices for minimizing emissions. The general duty to minimize emissions does not require you to make any further efforts to reduce emissions if levels required by the applicable standard have been achieved. Determination of whether a source is operating in compliance with operation and maintenance requirements will be based on information available to the Administrator which may include, but is not limited to, monitoring results, review of operation and maintenance procedures, review of operation and maintenance records, and inspection of the source.

(c) If your affected source uses an emission capture system and add-on control device, you must maintain a log detailing the operation and maintenance of the emission capture system, add-on control device, and continuous parameter monitors during the period between the compliance date specified for your affected source in § 63.4683 and the date when the initial emission capture system and add-on control device performance tests have been completed, as specified in § 63.4760. This requirement does not apply to a solvent recovery system for which you conduct liquid-liquid material balances according to § 63.4761(j) in lieu of conducting performance tests.

(d) For existing sources, before September 3, 2019, if your affected source uses an emission capture system and add-on control device, you must develop a written startup, shutdown, and malfunction plan (SSMP) according to the provisions in § 63.6(e)(3). The SSMP must address startup, shutdown, and corrective actions in the event of a malfunction of the emission capture system or the add-on control device. The SSMP must also address any coating operation equipment that may cause increased emissions or that would affect capture efficiency if the process equipment malfunctions, such as conveyors that move parts among enclosures.

[68 FR 31760, May 28, 2003, as amended at 71 FR 20465, Apr. 20, 2006; 84 FR 7699, Mar. 4, 2019]

§ 63.4701 What parts of the General Provisions apply to me?

Table 4 to this subpart indicates which parts of the General Provisions in §§ 63.1 through 63.15 apply to you.

NOTIFICATIONS, REPORTS, AND RECORDS

§ 63.4710 What notifications must I submit?

(a) *General.* You must submit the notifications in §§ 63.7(b) and (c), 63.8(f)(4), and 63.9(b) through (e) and (h) that apply to you by the dates specified in those sections, except as provided in paragraphs (b) and (c) of this section.

(b) *Initial Notification.* You must submit the Initial Notification required by § 63.9(b) for a new or reconstructed affected source no later than 120 days after initial startup, 120 days after May 28, 2003, or no later than 120 days after the source becomes subject to this subpart, whichever is later. For an existing affected source, you must submit the Initial Notification no later than 120 days after May 28, 2003, or no later than 120 days after the source becomes subject to this subpart, whichever is later.

(c) *Notification of Compliance Status.* You must submit the Notification of Compliance Status required by § 63.9(h) no later than 30 calendar days following the end of the initial compliance period described in § 63.4740, § 63.4750, or § 63.4760 that applies to your affected source. The Notification of Compliance Status must contain the

sfrattini on LAPJZKW1R2 with $$_JOB
VerDate Sep<11>2014 09:16 Apr 04, 2023 Jkt 256165 PO 00000 Frm 00986 Fmt 8010 Sfmt 8010 Q:\40\256165.XXX PC31

information specified in paragraphs (c)(1) through (9) of this section and in §63.9(h).

(1) Company name and address.

(2) Statement by a responsible official with that official's name, title, and signature, certifying the truth, accuracy, and completeness of the content of the report.

(3) Date of the report and beginning and ending dates of the reporting period. The reporting period is the initial compliance period described in §63.4740, §63.4750, or §63.4760 that applies to your affected source.

(4) Identification of the compliance option or options specified in §63.4691 that you used on each coating operation in the affected source during the initial compliance period.

(5) Statement of whether or not the affected source achieved the emission limitations for the initial compliance period.

(6) If you had a deviation, include the information in paragraphs (c)(6)(i) and (ii) of this section.

(i) A description and statement of the cause of the deviation.

(ii) If you failed to meet the applicable emission limit in §63.4690, include all the calculations you used to determine the grams organic HAP emitted per liter of coating solids used (pounds (lb) organic HAP emitted per gallon of coating solids used). You do not need to submit information provided by the materials suppliers or manufacturers, or test reports.

(7) For each of the data items listed in paragraphs (c)(7)(i) through (iv) of this section that is required by the compliance option(s) you used to demonstrate compliance with the emission limit, include an example of how you determined the value, including calculations and supporting data. Supporting data can include a copy of the information provided by the supplier or manufacturer of the example coating or material or a summary of the results of testing conducted according to §63.4741(a), (b), or (c). You do not need to submit copies of any test reports.

(i) Mass fraction of organic HAP for one coating, for one thinner, and for one cleaning material.

(ii) Volume fraction of coating solids for one coating.

(iii) Density for one coating, one thinner, and one cleaning material, except that if you use the compliant material option, only the example coating density is required.

(iv) The amount of waste materials and the mass of organic HAP contained in the waste materials for which you are claiming an allowance in Equation 1 of §63.4751.

(8) The calculation of grams organic HAP emitted per liter coating solids used (lb organic HAP emitted per gallon coating solids used) for the compliance option(s) you used, as specified in paragraphs (c)(8)(i) through (iii) of this section.

(i) For the compliant material option, provide an example calculation of the organic HAP content for one coating, using Equation 2 of §63.4741.

(ii) For the emission rate without add-on controls option, provide the calculation of the total mass of organic HAP emissions for each month; the calculation of the total volume of coating solids used each month; and the calculation of the 12-month organic HAP emission rate, using Equations 1 and 1A (or 1A-alt) through 1C, 2, and 3, respectively, of §63.4751.

(iii) For the emission rate with add-on controls option, provide the calculation of the total mass of organic HAP emissions for the coatings, thinners, and cleaning materials used each month, using Equations 1 and 1A through 1C of §63.4751; the calculation of the total volume of coating solids used each month, using Equation 2 of §63.4751; the calculation of the mass of organic HAP emission reduction each month by emission capture systems and add-on control devices, using Equations 1, 1A through 1D, 2, 3, and 3A through 3C of §63.4761, as applicable; the calculation of the total mass of organic HAP emissions each month, using Equation 4 of §63.4761; and the calculation of the 12-month organic HAP emission rate, using Equation 5 of §63.4761.

(9) For the emission rate with add-on controls option, you must include the information specified in paragraphs (c)(9)(i) through (iv) of this section, except that the requirements in paragraphs (c)(9)(i) through (iii) of this section do not apply to solvent recovery

sfrattini on LAPJZKW1R2 with $$_JOB
VerDate Sep<11>2014 09:16 Apr 04, 2023 Jkt 256165 PO 00000 Frm 00987 Fmt 8010 Sfmt 8010 Q:\40\256165.XXX PC31

systems for which you conduct liquid-liquid material balances according to § 63.4761(j).

(i) For each emission capture system, a summary of the data and copies of the calculations supporting the determination that the emission capture system is a permanent total enclosure (PTE) or a measurement of the emission capture system efficiency. Include a description of the protocol followed for measuring capture efficiency, summaries of any capture efficiency tests conducted, and any calculations supporting the capture efficiency determination. If you use the data quality objective (DQO) or lower confidence limit (LCL) approach, you must also include the statistical calculations to show you meet the DQO or LCL criteria in appendix A to subpart KK of this part. You do not need to submit complete test reports.

(ii) A summary of the results of each add-on control device performance test. You do not need to submit complete test reports.

(iii) A list of each emission capture system and add-on control device operating limits and a summary of the data used to calculate those limits.

(iv) A statement of whether or not you developed and implemented the work practice plan required by § 63.4693.

[68 FR 31760, May 28, 2003, as amended at 84 FR 7699, Mar. 4, 2019; 85 FR 73907, Nov. 19, 2020]

§ 63.4720 What reports must I submit?

(a) *Semiannual compliance reports*. You must submit semiannual compliance reports for each affected source according to the requirements of paragraphs (a)(1) through (7) of this section. The semiannual compliance reporting requirements may be satisfied by reports required under other parts of the Clean Air Act (CAA), as specified in paragraph (a)(2) of this section.

(1) *Dates*. Unless the Administrator has approved a different schedule for submission of reports under § 63.10(a), you must prepare and submit each semiannual compliance report according to the dates specified in paragraphs (a)(1)(i) through (iv) of this section. Note that the information reported for each of the months in the reporting period will be based on the last 12 months of data prior to the date of each monthly calculation.

(i) The first semiannual compliance report must cover the first semiannual reporting period which begins the day after the end of the initial compliance period described in § 63.4740, § 63.4750, or § 63.4760 that applies to your affected source and ends on June 30 or December 31, whichever occurs first following the end of the initial compliance period.

(ii) Each subsequent semiannual compliance report must cover the subsequent semiannual reporting period from January 1 through June 30 or the semiannual reporting period from July 1 through December 31.

(iii) Each semiannual compliance report must be postmarked or delivered no later than July 31 or January 31, whichever date is the first date following the end of the semiannual reporting period.

(iv) For each affected source that is subject to permitting regulations pursuant to 40 CFR part 70 or 40 CFR part 71, and if the permitting authority has established dates for submitting semiannual reports pursuant to 40 CFR 70.6(a)(3)(iii)(A) or 40 CFR 71.6(a)(3)(iii)(A), you may submit the first and subsequent compliance reports according to the dates the permitting authority has established instead of according to the date specified in paragraph (a)(1)(iii) of this section.

(2) *Inclusion with title V report*. Each affected source that has obtained a title V operating permit pursuant to 40 CFR part 70 or 40 CFR part 71 must report all deviations as defined in this subpart in the semiannual monitoring report required by 40 CFR 70.6(a)(3)(iii)(A) or 40 CFR 71.6(a)(3)(iii)(A). If an affected source submits a semiannual compliance report pursuant to this section along with, or as part of, the semiannual monitoring report required by 40 CFR 70.6(a)(3)(iii)(A) or 40 CFR 71.6(a)(3)(iii)(A), and the semiannual compliance report includes all required information concerning deviations from any emission limitation in this subpart, its submission shall be deemed to satisfy any obligation to report the same deviations in the semiannual

sfrattini on LAPJZKW1R2 with $$_JOB
VerDate Sep<11>2014 09:16 Apr 04, 2023 Jkt 256165 PO 00000 Frm 00988 Fmt 8010 Sfmt 8010 Q:\40\256165.XXX PC31

monitoring report. However, submission of a semiannual compliance report shall not otherwise affect any obligation the affected source may have to report deviations from permit requirements to the permitting authority.

(3) *General requirements*. The semiannual compliance report must contain the information specified in paragraphs (a)(3)(i) through (v) of this section, and the information specified in paragraphs (a)(4) through (7) and (c)(1) of this section that is applicable to your affected source.

(i) Company name and address.

(ii) Statement by a responsible official with that official's name, title, and signature, certifying the truth, accuracy, and completeness of the content of the report.

(iii) Date of report and beginning and ending dates of the reporting period. The reporting period is the 6-month period ending on June 30 or December 31. Note that the information reported for each of the 6 months in the reporting period will be based on the last 12 months of data prior to the date of each monthly calculation.

(iv) Identification of the compliance option or options specified in §63.4691 that you used on each coating operation during the reporting period. If you switched between compliance options during the reporting period, you must report the beginning and ending dates you used each option.

(v) If you used the emission rate without add-on controls or the emission rate with add-on controls compliance option (§63.4691(b) or (c)), the calculation results for each rolling 12-month organic HAP emission rate during the 6-month reporting period.

(4) *No deviations*. If there were no deviations from the emission limitations in §§63.4690, 63.4692, and 63.4693 that apply to you, the semiannual compliance report must include a statement that there were no deviations from the emission limitations during the reporting period. If you used the emission rate with add-on controls option and there were no periods during which the continuous parameter monitoring systems (CPMS) were out-of-control as specified in §63.8(c)(7), the semiannual compliance report must include a statement that there were no periods during which the CPMS were out-of-control during the reporting period.

(5) *Deviations: compliant material option*. If you used the compliant material option, and there was a deviation from the applicable emission limit in §63.4690, the semiannual compliance report must contain the information in paragraphs (a)(5)(i) through (iv) of this section.

(i) Identification of each coating used that deviated from the emission limit, each thinner and cleaning material used that contained organic HAP, and the dates and time periods each was used.

(ii) The calculation of the organic HAP content (using Equation 2 of §63.4741) for each coating identified in paragraph (a)(5)(i) of this section. You do not need to submit background data supporting this calculation (*e.g.*, information provided by coating suppliers or manufacturers, or test reports).

(iii) The determination of mass fraction of organic HAP for each coating, thinner, and cleaning material identified in paragraph (a)(5)(i) of this section. You do not need to submit background data supporting this calculation (*e.g.*, information provided by material suppliers or manufacturers, or test reports).

(iv) A statement of the cause of each deviation.

(6) *Deviations: emission rate without add-on controls option*. If you used the emission rate without add-on controls option and there was a deviation from the applicable emission limit in §63.4690, the semiannual compliance report must contain the information in paragraphs (a)(6)(i) through (iii) of this section.

(i) The beginning and ending dates of each compliance period during which the 12-month organic HAP emission rate exceeded the applicable emission limit in §63.4690.

(ii) The calculations used to determine the 12-month organic HAP emission rate for the compliance period in which the deviation occurred. You must provide the calculations for Equations 1, 1A (or 1A-alt) through 1C, 2, and 3 in §63.4751; and if applicable, the calculation used to determine mass of organic HAP in waste materials according to §63.4751(e)(4). You do not

sfrattini on LAPJZKW1R2 with $$_JOB
VerDate Sep<11>2014 09:16 Apr 04, 2023 Jkt 256165 PO 00000 Frm 00989 Fmt 8010 Sfmt 8010 Q:\40\256165.XXX PC31

need to submit background data supporting these calculations (*e.g.*, information provided by materials suppliers or manufacturers, or test reports).

(iii) A statement of the cause of each deviation.

(7) *Deviations: Emission rate with add-on controls option.* You must be in compliance with the emission limitations in this subpart as specified in paragraphs (a)(7)(i) and (ii) of this section.

(i) For existing sources, before September 3, 2019, if you used the emission rate with add-on controls option and there was a deviation from an emission limitation (including any periods when emissions bypassed the add-on control device and were diverted to the atmosphere), the semiannual compliance report must contain the information in paragraphs (a)(7)(i)(A) through (N) of this section. This includes periods of SSM during which deviations occurred.

(A) The beginning and ending dates of each compliance period during which the 12-month organic HAP emission rate exceeded the applicable emission limit in § 63.4690.

(B) The calculations used to determine the 12-month organic HAP emission rate for each compliance period in which a deviation occurred. You must provide the calculation of the total mass of organic HAP emissions for the coatings, thinners, and cleaning materials used each month, using Equations 1 and 1A through 1C of § 63.4751; and, if applicable, the calculation used to determine mass of organic HAP in waste materials according to § 63.4751(e)(4); the calculation of the total volume of coating solids used each month, using Equation 2 of § 63.4751; the calculation of the mass of organic HAP emission reduction each month by emission capture systems and add-on control devices, using Equations 1 and 1A through 1D of § 63.4761, and Equations 2, 3, and 3A through 3C of § 63.4761, as applicable; the calculation of the total mass of organic HAP emissions each month, using Equation 4 of § 63.4761; and the calculation of the 12-month organic HAP emission rate, using Equation 5 of § 63.4761. You do not need to submit the background data supporting these calculations (*e.g.*, information provided by materials suppliers or manufacturers, or test reports).

(C) The date and time that each malfunction started and stopped.

(D) A brief description of the CPMS.

(E) The date of the latest CPMS certification or audit.

(F) The date and time that each CPMS was inoperative, except for zero (low-level) and high-level checks.

(G) The date, time, and duration that each CPMS was out-of-control, including the information in § 63.8(c)(8).

(H) The date and time period of each deviation from an operating limit in Table 3 to this subpart, date and time period of any bypass of the add-on control device, and whether each deviation occurred during a period of SSM or during another period.

(I) A summary of the total duration of each deviation from an operating limit in Table 3 to this subpart, each bypass of the add-on control device during the semiannual reporting period, and the total duration as a percent of the total source operating time during that semiannual reporting period.

(J) A breakdown of the total duration of the deviations from the operating limits in Table 3 to this subpart and bypasses of the add-on control device during the semiannual reporting period by identifying deviations due to start-up, shutdown, control equipment problems, process problems, other known causes, and other unknown causes.

(K) A summary of the total duration of CPMS downtime during the semiannual reporting period and the total duration of CPMS downtime as a percent of the total source operating time during that semiannual reporting period.

(L) A description of any changes in the CPMS, coating operation, emission capture system, or add-on control device since the last semiannual reporting period.

(M) For each deviation from the work practice standards, a description of the deviation, the date and time period of the deviation, and the actions you took to correct the deviation.

(N) A statement of the cause of each deviation.

(ii) After March 4, 2019 for new and reconstructed sources, and on and after September 3, 2019 for existing sources, if you used the emission rate with add-

sfrattini on LAPJZKW1R2 with $$_JOB
VerDate Sep<11>2014 09:16 Apr 04, 2023 Jkt 256165 PO 00000 Frm 00990 Fmt 8010 Sfmt 8010 Q:\40\256165.XXX PC31

on controls option and there was a deviation from an emission limitation (including any periods when emissions bypassed the add-on control device and were diverted to the atmosphere), the semiannual compliance report must contain the information in paragraphs (a)(7)(ii)(A) through (M) of this section.

(A) The beginning and ending dates of each compliance period during which the 12-month organic HAP emission rate exceeded the applicable emission limit in §63.4690.

(B) The calculations used to determine the 12-month organic HAP emission rate for each compliance period in which a deviation occurred. You must provide the calculation of the total mass of organic HAP emissions for the coatings, thinners, and cleaning materials used each month, using Equations 1 and 1A through 1C of §63.4751; and, if applicable, the calculation used to determine mass of organic HAP in waste materials according to §63.4751(e)(4); the calculation of the total volume of coating solids used each month, using Equation 2 of §63.4751; the calculation of the mass of organic HAP emission reduction each month by emission capture systems and add-on control devices, using Equations 1 and 1A through 1D of §63.4761, and Equations 2, 3, and 3A through 3C of §63.4761, as applicable; the calculation of the total mass of organic HAP emissions each month, using Equation 4 of §63.4761; and the calculation of the 12-month organic HAP emission rate, using Equation 5 of §63.4761. You do not need to submit the background data supporting these calculations (*e.g.*, information provided by materials suppliers or manufacturers, or test reports).

(C) A brief description of the CPMS.

(D) The date of the latest CPMS certification or audit.

(E) The date and time that each CPMS was inoperative, except for zero (low-level) and high-level checks.

(F) The date, time, and duration that each CPMS was out-of-control, including the information in §63.8(c)(8).

(G) The date and time period of each deviation from an operating limit in Table 3 to this subpart, date and time period of any bypass of the add-on control device.

(H) A summary of the total duration of each deviation from an operating limit in Table 3 to this subpart, each bypass of the add-on control device during the semiannual reporting period, and the total duration as a percent of the total source operating time during that semiannual reporting period.

(I) A breakdown of the total duration of the deviations from the operating limits in Table 3 to this subpart and bypasses of the add-on control device during the semiannual reporting period by identifying deviations due to control equipment problems, process problems, other known causes, and other unknown causes; a list of the affected source or equipment, an estimate of the quantity of each regulated pollutant emitted over any emission limit, and a description of the method used to estimate the emissions.

(J) A summary of the total duration of CPMS downtime during the semiannual reporting period and the total duration of CPMS downtime as a percent of the total source operating time during that semiannual reporting period.

(K) A description of any changes in the CPMS, coating operation, emission capture system, or add-on control device since the last semiannual reporting period.

(L) For each deviation from the standard, including work practice standards, a description of the deviation, the date and time period of the deviation, and the actions you took to correct the deviation.

(M) A statement of the cause of each deviation.

(b) *Performance test reports.* If you use the emission rate with add-on controls option, you must submit reports of performance test results for emission capture systems and add-on control devices no later than 60 days after completing the tests as specified in §63.10(d)(2).

(c) *SSM reports.* For existing sources, before September 3, 2019, if you used the emission rate with add-on controls option and you had an SSM during the semiannual reporting period, you must submit the reports specified in paragraphs (c)(1) and (2) of this section.

sfrattini on LAPJZKW1R2 with $$_JOB
VerDate Sep<11>2014 09:16 Apr 04, 2023 Jkt 256165 PO 00000 Frm 00991 Fmt 8010 Sfmt 8010 Q:\40\256165.XXX PC31

(1) If your actions were consistent with your SSMP, you must include the information specified in § 63.10(d) in the semiannual compliance report required by paragraph (a) of this section.

(2) If your actions were not consistent with your SSMP, you must submit an immediate SSM report as described in paragraphs (c)(2)(i) and (ii) of this section.

(i) You must describe the actions taken during the event in a report delivered by facsimile, telephone, or other means to the Administrator within 2 working days after starting actions that are inconsistent with the plan.

(ii) You must submit a letter to the Administrator within 7 working days after the end of the event, unless you have made alternative arrangements with the Administrator as specified in § 63.10(d)(5)(ii). The letter must contain the information specified in § 63.10(d)(5)(ii).

(d) *Electronic reporting.* (1) Within 60 days after the date of completing each performance test required by this subpart, you must submit the results of the performance test following the procedures specified in paragraphs (d)(1)(i) through (iii) of this section.

(i) *Data collected using test methods supported by EPA's Electronic Reporting Tool (ERT) as listed on EPA's ERT website (https://www.epa.gov/electronic-reporting-air-emissions/electronic-reporting-tool-ert) at the time of the test.* Submit the results of the performance test to the EPA via the Compliance and Emissions Data Reporting Interface (CEDRI), which can be accessed through EPA's Central Data Exchange (CDX) (*https://cdx.epa.gov/*). The data must be submitted in a file format generated through the use of EPA's ERT. Alternatively, you may submit an electronic file consistent with the extensible markup language (XML) schema listed on EPA's ERT website.

(ii) *Data collected using test methods that are not supported by EPA's ERT as listed on EPA's ERT website at the time of the test.* The results of the performance test must be included as an attachment in the ERT or an alternate electronic file consistent with the XML schema listed on EPA's ERT website. Submit the ERT generated package or alternative file to the EPA via CEDRI.

(iii) *Confidential business information (CBI).* If you claim some of the information submitted under paragraph (a)(1) of this section is CBI, you must submit a complete file, including information claimed to be CBI, to the EPA. The file must be generated through the use of EPA's ERT or an alternate electronic file consistent with the XML schema listed on EPA's ERT website. Submit the file on a compact disc, flash drive, or other commonly used electronic storage medium and clearly mark the medium as CBI. Mail the electronic medium to U.S. EPA/OAQPS/CORE CBI Office, Attention: Group Leader, Measurement Policy Group, MD C404–02, 4930 Old Page Rd., Durham, NC 27703. The same file with the CBI omitted must be submitted to the EPA via EPA's CDX as described in paragraph (d)(1)(i) of this section.

(2) You must submit the Notification of Compliance Status required in § 63.4710(c) and the semiannual compliance reports required in paragraph (a) of this section to the EPA via the CEDRI. (CEDRI can be accessed through the EPA's CDX (*https://cdx.epa.gov/*)). For semiannual compliance reports, you must use the appropriate electronic report in CEDRI for this subpart or an alternative electronic file format consistent with the XML schema listed on the CEDRI website (*https://www.epa.gov/electronic-reporting-air-emissions/compliance-and-emissions-data-reporting-interface-cedri*). If the reporting form specific to this subpart is not available in CEDRI at the time that the report is due, you must submit the report to the Administrator at all the appropriate addresses listed in § 63.13. Once the reporting template has been available in CEDRI for 1 year, you must begin submitting all subsequent reports via CEDRI. For the Notification of Compliance Status, you must submit a file in portable document format (PDF) to CEDRI. The reports must be submitted by the deadlines specified in this subpart, regardless of the method in which the reports are submitted.

(3) If you are required to electronically submit a report through CEDRI in EPA's CDX, you may assert a claim

sfrattini on LAPJZKW1R2 with $$_JOB
VerDate Sep<11>2014 09:16 Apr 04, 2023 Jkt 256165 PO 00000 Frm 00992 Fmt 8010 Sfmt 8010 Q:\40\256165.XXX PC31

of EPA system outage for failure to timely comply with the reporting requirement. To assert a claim of EPA system outage, you must meet the requirements outlined in paragraphs (d)(3)(i) through (vii) of this section.

(i) You must have been or will be precluded from accessing CEDRI and submitting a required report within the time prescribed due to an outage of either EPA's CEDRI or CDX systems.

(ii) The outage must have occurred within the period of time beginning five business days prior to the date that the submission is due.

(iii) The outage may be planned or unplanned.

(iv) You must submit notification to the Administrator in writing as soon as possible following the date you first knew, or through due diligence should have known, that the event may cause or has caused a delay in reporting.

(v) You must provide to the Administrator a written description identifying:

(A) The date(s) and time(s) when CDX or CEDRI was accessed and the system was unavailable;

(B) A rationale for attributing the delay in reporting beyond the regulatory deadline to EPA system outage;

(C) Measures taken or to be taken to minimize the delay in reporting; and

(D) The date by which you propose to report, or if you have already met the reporting requirement at the time of the notification, the date you reported.

(vi) The decision to accept the claim of EPA system outage and allow an extension to the reporting deadline is solely within the discretion of the Administrator.

(vii) In any circumstance, the report must be submitted electronically as soon as possible after the outage is resolved.

(4) If you are required to electronically submit a report through CEDRI in EPA's CDX, you may assert a claim of force majeure for failure to timely comply with the reporting requirement. To assert a claim of force majeure, you must meet the requirements outlined in paragraphs (d)(4)(i) through (v) of this section.

(i) You may submit a claim if a force majeure event is about to occur, occurs, or has occurred or there are lingering effects from such an event within the period of time beginning five business days prior to the date the submission is due. For the purposes of this section, a force majeure event is defined as an event that will be or has been caused by circumstances beyond the control of the affected facility, its contractors, or any entity controlled by the affected facility that prevents you from complying with the requirement to submit a report electronically within the time period prescribed. Examples of such events are acts of nature (*e.g.*, hurricanes, earthquakes, or floods), acts of war or terrorism, or equipment failure or safety hazard beyond the control of the affected facility (*e.g.*, large scale power outage).

(ii) You must submit the notification to the Administrator in writing as soon as possible following the date you first knew, or through due diligence should have known, that the event may cause or has caused a delay in reporting.

(iii) You must provide to the Administrator:

(A) A written description of the force majeure event;

(B) A rationale for attributing the delay in reporting beyond the regulatory deadline to the force majeure event;

(C) Measures taken or to be taken to minimize the delay in reporting; and

(D) The date by which you propose to report, or if you have already met the reporting requirement at the time of the notification, the date you reported.

(iv) The decision to accept the claim of force majeure and allow an extension to the reporting deadline is solely within the discretion of the Administrator.

(v) In any circumstance, the reporting must occur as soon as possible after the force majeure event occurs.

[68 FR 31760, May 28, 2003, as amended at 84 FR 7699, Mar. 4, 2019]

§ 63.4730 What records must I keep?

You must collect and keep records of the data and information specified in this section. Failure to collect and keep these records is a deviation from the applicable standard.

(a) A copy of each notification and report that you submitted to comply

sfrattini on LAPJZKW1R2 with $$_JOB
VerDate Sep<11>2014 09:16 Apr 04, 2023 Jkt 256165 PO 00000 Frm 00993 Fmt 8010 Sfmt 8010 Q:\40\256165.XXX PC31

with this subpart, and the documentation supporting each notification and report.

(b) A current copy of information provided by materials suppliers or manufacturers, such as manufacturer's formulation data, or test data used to determine the mass fraction of organic HAP and density for each coating, thinner, and cleaning material and the volume fraction of coating solids for each coating. If you conducted testing to determine mass fraction of organic HAP, density, or volume fraction of coating solids, you must keep a copy of the complete test report. If you use information provided to you by the manufacturer or supplier of the material that was based on testing, you must keep the summary sheet of results provided to you by the manufacturer or supplier. You are not required to obtain the test report or other supporting documentation from the manufacturer or supplier.

(c) For each compliance period, the records specified in paragraphs (c)(1) through (4) of this section.

(1) A record of the coating operations at which you used each compliance option and the time periods (beginning and ending dates and times) you used each option.

(2) For the compliant material option, a record of the calculation of the organic HAP content for each coating, using Equation 2 of § 63.4741.

(3) For the emission rate without add-on controls option, a record of the calculation of the total mass of organic HAP emissions for the coatings, thinners, and cleaning materials used each month, using Equations 1, 1A (or 1A-alt) through 1C, and 2 of § 63.4751; and, if applicable, the calculation used to determine mass of organic HAP in waste materials according to § 63.4751(e)(4); the calculation of the total volume of coating solids used each month, using Equation 2 of § 63.4751; and the calculation of each 12-month organic HAP emission rate, using Equation 3 of § 63.4751.

(4) For the emission rate with add-on controls option, records of the calculations specified in paragraphs (c)(4)(i) through (v) of this section.

(i) The calculation of the total mass of organic HAP emissions for the coatings, thinners, and cleaning materials used each month, using Equations 1 and 1A through 1C of § 63.4751; and, if applicable, the calculation used to determine mass of organic HAP in waste materials according to § 63.4751(e)(4).

(ii) The calculation of the total volume of coating solids used each month, using Equation 2 of § 63.4751.

(iii) The calculation of the mass of organic HAP emission reduction by emission capture systems and add-on control devices, using Equations 1 and 1A through 1D of § 63.4761, and Equations 2, 3, and 3A through 3C of § 63.4761, as applicable.

(iv) The calculation of the total mass of organic HAP emissions each month, using Equation 4 of § 63.4761.

(v) The calculation of each 12-month organic HAP emission rate, using Equation 5 of § 63.4761.

(d) A record of the name and volume of each coating, thinner, and cleaning material used during each compliance period.

(e) A record of the mass fraction of organic HAP for each coating, thinner, and cleaning material used during each compliance period.

(f) A record of the volume fraction of coating solids for each coating used during each compliance period.

(g) A record of the density for each coating used during each compliance period; and, if you use either the emission rate without add-on controls or the emission rate with add-on controls compliance option, the density for each thinner and cleaning material used during each compliance period.

(h) If you use an allowance in Equation 1 of § 63.4751 for organic HAP contained in waste materials sent to or designated for shipment to a treatment, storage, and disposal facility (TSDF) according to § 63.4751(e)(4), you must keep records of the information specified in paragraphs (h)(1) through (3) of this section.

(1) The name and address of each TSDF to which you sent waste materials for which you use an allowance in Equation 1 of § 63.4751; a statement of which subparts under 40 CFR parts 262, 264, 265, and 266 apply to the facility; and the date of each shipment.

sfrattini on LAPJZKW1R2 with $$_JOB
VerDate Sep<11>2014 09:16 Apr 04, 2023 Jkt 256165 PO 00000 Frm 00994 Fmt 8010 Sfmt 8010 Q:\40\256165.XXX PC31

(2) Identification of the coating operations producing waste materials included in each shipment and the month or months in which you used the allowance for these materials in Equation 1 of §63.4751.

(3) The methodology used in accordance with §63.4751(e)(4) to determine the total amount of waste materials sent to or the amount collected, stored, and designated for transport to a TSDF each month; and the methodology to determine the mass of organic HAP contained in these waste materials. This must include the sources for all data used in the determination, methods used to generate the data, frequency of testing or monitoring, and supporting calculations and documentation, including the waste manifest for each shipment.

(i) [Reserved]

(j) You must keep records of the date, time, and duration of each deviation.

(k) If you use the emission rate with add-on controls option, you must keep the records specified in paragraphs (k)(1) through (2) of this section.

(1) For existing sources, before September 3, 2019:

(i) For each deviation, a record of whether the deviation occurred during a period of SSM.

(ii) The records in §63.6(e)(3)(iii) through (v) related to SSM.

(iii) The records required to show continuous compliance with each operating limit specified in Table 3 to this subpart that applies to you.

(iv) For each capture system that is a PTE, the data and documentation you used to support a determination that the capture system meets the criteria in Method 204 of appendix M to 40 CFR part 51 for a PTE and has a capture efficiency of 100 percent, as specified in §63.4765(a).

(v) For each capture system that is not a PTE, the data and documentation you used to determine capture efficiency according to the requirements specified in §§63.4764 and 63.4765(b) through (e), including the records specified in paragraphs (k)(1)(v)(A) through (C) of this section that apply to you.

(A) *Records for a liquid-to-uncaptured-gas protocol using a temporary total enclosure or building enclosure.* Records of the mass of total volatile hydrocarbon (TVH) as measured by Method 204A or F of appendix M to 40 CFR part 51 for each material used in the coating operation, and the total TVH for all materials used during each capture efficiency test run, including a copy of the test report. Records of the mass of TVH emissions not captured by the capture system that exited the temporary total enclosure or building enclosure during each capture efficiency test run as measured by Method 204D or E of appendix M to 40 CFR part 51, including a copy of the test report. Records documenting that the enclosure used for the capture efficiency test met the criteria in Method 204 of appendix M to 40 CFR part 51 for either a temporary total enclosure or a building enclosure.

(B) *Records for a gas-to-gas protocol using a temporary total enclosure or a building enclosure.* Records of the mass of TVH emissions captured by the emission capture system as measured by Method 204B or C of appendix M to 40 CFR part 51 at the inlet to the add-on control device, including a copy of the test report. Records of the mass of TVH emissions not captured by the capture system that exited the temporary total enclosure or building enclosure during each capture efficiency test run as measured by Method 204D or E of appendix M to 40 CFR part 51, including a copy of the test report. Records documenting that the enclosure used for the capture efficiency test met the criteria in Method 204 of appendix M to 40 CFR part 51 for either a temporary total enclosure or a building enclosure.

(C) *Records for an alternative protocol.* Records needed to document a capture efficiency determination using an alternative method or protocol as specified in §63.4765(e), if applicable.

(vi) The records specified in paragraphs (k)(1)(vi)(A) and (B) of this section for each add-on control device organic HAP destruction or removal efficiency determination as specified in §63.4766.

(A) Records of each add-on control device performance test conducted according to §§63.4764 and 63.4766.

(B) Records of the coating operation conditions during the add-on control device performance test showing that

sfrattini on LAPJZKW1R2 with $$_JOB
VerDate Sep<11>2014 09:16 Apr 04, 2023 Jkt 256165 PO 00000 Frm 00995 Fmt 8010 Sfmt 8010 Q:\40\256165.XXX PC31

the performance test was conducted under representative operating conditions.

(vii) Records of the data and calculations you used to establish the emission capture and add-on control device operating limits as specified in § 63.4767 and to document compliance with the operating limits as specified in Table 3 to this subpart.

(viii) A record of the work practice plan required by § 63.4693, and documentation that you are implementing the plan on a continuous basis.

(2) After March 4, 2019 for new and reconstructed sources, and on and after September 3, 2019 for existing sources:

(i) The records required to show continuous compliance with each operating limit specified in Table 3 to this subpart that applies to you.

(ii) For each capture system that is a PTE, the data and documentation you used to support a determination that the capture system meets the criteria in Method 204 of appendix M to 40 CFR part 51 for a PTE and has a capture efficiency of 100 percent, as specified in § 63.4765(a).

(iii) For each capture system that is not a PTE, the data and documentation you used to determine capture efficiency according to the requirements specified in §§ 63.4764 and 63.4765(b) through (e), including the records specified in paragraphs (k)(2)(iii)(A) through (C) of this section that apply to you.

(A) *Records for a liquid-to-uncaptured-gas protocol using a temporary total enclosure or building enclosure.* Records of the mass of total volatile hydrocarbon (TVH) as measured by Method 204A or F of appendix M to 40 CFR part 51 for each material used in the coating operation, and the total TVH for all materials used during each capture efficiency test run, including a copy of the test report. Records of the mass of TVH emissions not captured by the capture system that exited the temporary total enclosure or building enclosure during each capture efficiency test run as measured by Method 204D or E of appendix M to 40 CFR part 51, including a copy of the test report. Records documenting that the enclosure used for the capture efficiency test met the criteria in Method 204 of appendix M to 40 CFR part 51 for either a temporary total enclosure or a building enclosure.

(B) *Records for a gas-to-gas protocol using a temporary total enclosure or a building enclosure.* Records of the mass of TVH emissions captured by the emission capture system as measured by Method 204B or C of appendix M to 40 CFR part 51 at the inlet to the add-on control device, including a copy of the test report. Records of the mass of TVH emissions not captured by the capture system that exited the temporary total enclosure or building enclosure during each capture efficiency test run as measured by Method 204D or E of appendix M to 40 CFR part 51, including a copy of the test report. Records documenting that the enclosure used for the capture efficiency test met the criteria in Method 204 of appendix M to 40 CFR part 51 for either a temporary total enclosure or a building enclosure.

(C) *Records for an alternative protocol.* Records needed to document a capture efficiency determination using an alternative method or protocol as specified in § 63.4765(e), if applicable.

(iv) The records specified in paragraphs (k)(2)(iv)(A) and (B) of this section for each add-on control device organic HAP destruction or removal efficiency determination as specified in § 63.4766.

(A) Records of each add-on control device performance test conducted according to §§ 63.4764 and 63.4766.

(B) Records of the coating operation conditions during the add-on control device performance test showing that the performance test was conducted under representative operating conditions.

(v) Records of the data and calculations you used to establish the emission capture and add-on control device operating limits as specified in § 63.4767 and to document compliance with the operating limits as specified in Table 3 to this subpart.

(vi) A record of the work practice plan required by § 63.4693, and documentation that you are implementing the plan on a continuous basis.

[68 FR 31760, May 28, 2003, as amended at 84 FR 7701, Mar. 4, 2019]

sfrattini on LAPJZKW1R2 with $$_JOB
VerDate Sep<11>2014 09:16 Apr 04, 2023 Jkt 256165 PO 00000 Frm 00996 Fmt 8010 Sfmt 8010 Q:\40\256165.XXX PC31

§63.4731 In what form and for how long must I keep my records?

(a) Your records must be in a form suitable and readily available for expeditious review, according to §63.10(b)(1). Where appropriate, the records may be maintained as electronic spreadsheets or as a database.

(b) As specified in §63.10(b)(1), you must keep each record for 5 years following the date of each occurrence, measurement, maintenance, corrective action, report, or record.

(c) You must keep each record on-site for at least 2 years after the date of each occurrence, measurement, maintenance, corrective action, report, or record, according to §63.10(b)(1). You may keep the records off-site for the remaining 3 years.

COMPLIANCE REQUIREMENTS FOR THE COMPLIANT MATERIAL OPTION

§63.4740 By what date must I conduct the initial compliance demonstration?

You must complete the initial compliance demonstration for the initial compliance period according to the requirements in §63.4741. The initial compliance period begins on the applicable compliance date specified in §63.4683 and ends on the last day of the 12th month following the compliance date. If the compliance date occurs on any day other than the first day of a month, then the initial compliance period extends through the end of that month plus the next 12 months. The initial compliance demonstration includes the calculations according to §63.4741 and supporting documentation showing that during the initial compliance period, you used no coating with an organic HAP content that exceeded the applicable emission limit in §63.4690, and that you used no thinners or cleaning materials that contained organic HAP.

§63.4741 How do I demonstrate initial compliance with the emission limitations?

You may use the compliant material option for any individual coating operation, for any group of coating operations in the affected source, or for all the coating operations in the affected source. You must use either the emission rate without add-on controls option or the emission rate with add-on controls option for any coating operation in the affected source for which you do not use this option. To demonstrate initial compliance using the compliant material option, the coating operation or group of coating operations must use no coating with an organic HAP content that exceeds the applicable emission limit in §63.4690 and must use no thinner or cleaning material that contains organic HAP as determined according to this section. Any coating operation for which you use the compliant material option is not required to meet the operating limits or work practice standards required in §§63.4692 and 63.4693, respectively. To demonstrate initial compliance with the emission limitations using the compliant material option, you must meet all the requirements of this section for the coating operation or group of coating operations using this option. Use the procedures in this section on each coating, thinner, and cleaning material in the condition it is in when it is received from its manufacturer or supplier and prior to any alteration. You do not need to redetermine the mass of organic HAP in coatings, thinners, or cleaning materials that have been reclaimed onsite and reused in the coating operation(s) for which you use the compliant material option, provided these materials in their condition as received were demonstrated to comply with the compliant material option. If the mass fraction of organic HAP of a coating equals zero, determined according to paragraph (a) of this section, and you use the compliant material option, you are not required to comply with paragraphs (b) and (c) of this section for that coating.

(a) *Determine the mass fraction of organic HAP for each material used.* You must determine the mass fraction of organic HAP for each coating, thinner, and cleaning material used during the compliance period by using one of the options in paragraphs (a)(1) through (5) of this section.

(1) *Method 311 (appendix A to 40 CFR part 63).* You may use Method 311 for

sfrattini on LAPJZKW1R2 with $$_JOB
VerDate Sep<11>2014 09:16 Apr 04, 2023 Jkt 256165 PO 00000 Frm 00997 Fmt 8010 Sfmt 8010 Q:\40\256165.XXX PC31

determining the mass fraction of organic HAP. Use the procedures specified in paragraphs (a)(1)(i) and (ii) of this section when performing a Method 311 test. If these values cannot be determined using Method 311, the owner or operator shall submit an alternative technique for determining their values for approval by the Administrator.

(i) Count each organic HAP that is measured to be present at 0.1 percent by mass or more for OSHA-defined carcinogens as specified in 29 CFR 1910.1200(d)(4), and at 1.0 percent by mass or more for other organic HAP compounds. For example, if toluene (not an OSHA carcinogen) is measured to be 0.5 percent of the material by mass, you do not have to count it. Express the mass fraction of each organic HAP you count as a value truncated to four places after the decimal point (*e.g.*, 0.379178412 truncates to 0.3791).

(ii) Calculate the total mass fraction of organic HAP in the test material by adding up the individual organic HAP mass fractions and truncating the result to three places after the decimal point (*e.g.*, 0.763).

(2) *Method 24 (appendix A–7 to 40 CFR part 60).* For coatings, you may use Method 24 to determine the mass fraction of nonaqueous volatile matter and use that value as a substitute for mass fraction of organic HAP. (NOTE: Method 24 is not appropriate for those coatings with a water content that would result in an effective detection limit greater than the applicable emission limit.) One of the voluntary consensus standards in paragraphs (a)(2)(i) through (iv) may be used as an alternative to using Method 24.

(i) ASTM Method D2111–10 (Reapproved 2015), ''Standard Test Methods for Specific Gravity and Density of Halogenated Organic Solvents and Their Admixtures,'' (incorporated by reference, see § 63.14);

(ii) ASTM Method D2369–10 (Reapproved 2015)[e], ''Standard Test Method for Volatile Content of Coatings,'' (incorporated by reference, see § 63.14);

(iii) ASTM Method D2697–03 (Reapproved 2014), ''Standard Test Method for Volume Nonvolatile Matter in Clear or Pigmented Coatings,'' (incorporated by reference, see § 63.14); and

(iv) ASTM Method D6093–97 (Reapproved 2016), ''Standard Test Method for Percent Volume Nonvolatile Matter in Clear or Pigmented Coatings Using a Helium Gas Pycnometer,'' (incorporated by reference, see § 63.14).

(3) *Alternative method.* You may use an alternative test method for determining the mass fraction of organic HAP once the Administrator has approved it. You must follow the procedure in § 63.7(f) to submit an alternative test method for approval.

(4) *Information from the supplier or manufacturer of the material.* You may rely on information other than that generated by the test methods specified in paragraphs (a)(1) through (3) of this section, such as manufacturer's formulation data, if it represents each organic HAP that is present at 0.1 percent by mass or more for OSHA-defined carcinogens as specified in 29 CFR 1910.1200(d)(4), and at 1.0 percent by mass or more for other organic HAP compounds. For example, if toluene (not an OSHA carcinogen) is 0.5 percent of the material by mass, you do not have to count it. If there is a disagreement between such information and results of a test conducted according to paragraphs (a)(1) through (3) of this section, then the test method results will take precedence unless, after consultation, a regulated source could demonstrate to the satisfaction of the enforcement agency that the formulation data were correct.

(5) *Solvent blends.* Solvent blends may be listed as single components for some materials in data provided by manufacturers or suppliers. Solvent blends may contain organic HAP which must be counted toward the total organic HAP mass fraction of the materials. When test data and manufacturer's data for solvent blends are not available, you may use the default values for the mass fraction of organic HAP in these solvent blends listed in Table 5 or Table 6 to this subpart. If you use the tables, you must use the values in Table 5 for all solvent blends that match Table 5 entries, and you may only use Table 6 if the solvent blends in the materials you use do not match any of the solvent blends in Table 5 and

sfrattini on LAPJZKW1R2 with $$_JOB
VerDate Sep<11>2014 09:16 Apr 04, 2023 Jkt 256165 PO 00000 Frm 00998 Fmt 8010 Sfmt 8010 Q:\40\256165.XXX PC31

you only know whether the blend is aliphatic or aromatic. However, if the results of a Method 311 (40 CFR part 63, appendix A) test indicate higher values than those listed on Table 5 or Table 6 to this subpart, the Method 311 results will take precedence.

(b) *Determine the volume fraction of coating solids for each coating*. You must determine the volume fraction of coating solids (liters of coating solids per liter of coating) for each coating used during the compliance period by one of the methods specified in paragraph (b)(1), (2), or (3) of this section.

(1) *ASTM Method D2697–03 (Reapproved 2014) or D6093–97 (Reapproved 2016)*. You may use ASTM Method D2697–03 (Reapproved 2014), ''Standard Test Method for Volume Nonvolatile Matter in Clear or Pigmented Coatings'' (incorporated by reference, see §63.14), or D6093–97 (Reapproved 2016), ''Standard Test Method for Percent Volume Nonvolatile Matter in Clear or Pigmented Coatings Using a Helium Gas Pycnometer'' (incorporated by reference, see §63.14), to determine the volume fraction of coating solids for each coating. Divide the nonvolatile volume percent obtained with the methods by 100 to calculate volume fraction of coating solids. If these values cannot be determined using these methods, the owner operator may submit an alternative technique for determining their values for approval by the Administrator.

(2) *Information from the supplier or manufacturer of the material*. You may obtain the volume fraction of coating solids for each coating from the supplier or manufacturer.

(3) *Calculation of volume fraction of coating solids*. If the volume fraction of coating solids cannot be determined using the options in paragraphs (b)(1) and (2) of this section, you must determine it using Equation 1 of this section:

$$V_s = 1 - \left(\frac{m_{volatiles}}{D_{avg}} \right) \qquad \text{(Eq. 1)}$$

Where:

V_s = Volume fraction of coating solids, liters coating solids per liter coating.

$m_{volatiles}$ = Total volatile matter content of the coating, including HAP, volatile organic compounds (VOC), water, and exempt compounds, determined according to Method 24 in appendix A–7 of 40 CFR part 60, grams volatile matter per liter coating.

D_{avg} = Average density of volatile matter in the coating, grams volatile matter per liter volatile matter, determined from test results using ASTM Method D1475–13, ''Standard Test Method for Density of Liquid Coatings, Inks, and Related Products,'' (incorporated by reference, see §63.14), information from the supplier or manufacturer of the material, or reference sources providing density or specific gravity data for pure materials. If there is disagreement between ASTM Method D1475–13 test results and other information sources, the test results will take precedence.

(c) *Determine the density of each coating*. Determine the density of each coating used during the compliance period from test results using ASTM Method D1475–13, ''Standard Test Method for Density of Liquid Coatings, Inks, and Related Products,'' (incorporated by reference, see §63.14), or information from the supplier or manufacturer of the material. If there is disagreement between ASTM Method D1475–13 test results and the supplier's or manufacturer's information, the test results will take precedence.

(d) *Calculate the organic HAP content of each coating*. Calculate the organic HAP content, grams organic HAP per liter coating solids, of each coating used during the compliance period, using Equation 2 of this section:

$$H_c = \frac{(D_c)(W_c)}{V_s} \qquad \text{(Eq. 2)}$$

Where:

H_c = Organic HAP content of the coating, grams organic HAP per liter coating solids.

D_c = Density of coating, grams coating per liter coating, determined according to paragraph (c) of this section.

W_c = Mass fraction of organic HAP in the coating, grams organic HAP per gram coating, determined according to paragraph (a) of this section.

V_s = Volume fraction of coating solids, liter coating solids per liter coating, determined according to paragraph (b) of this section.

(e) *Compliance demonstration*. The organic HAP content for each coating

sfrattini on LAPJZKW1R2 with $$_JOB
VerDate Sep<11>2014 09:16 Apr 04, 2023 Jkt 256165 PO 00000 Frm 00999 Fmt 8010 Sfmt 8010 Q:\40\256165.XXX PC31
ER98AD03.000</MATH> ER98AD03.001</MATH>

used during the initial compliance period, determined using Equation 2 of this section, must be less than or equal to the applicable emission limit in § 63.4690; and each thinner and cleaning material used during the initial compliance period must contain no organic HAP, determined according to paragraph (a) of this section. You must keep all records required by §§ 63.4730 and 63.4731. As part of the Notification of Compliance Status required in § 63.4710, you must identify the coating operation(s) for which you used the compliant material option and submit a statement that the coating operation(s) was (were) in compliance with the emission limitations during the initial compliance period because you used no coatings for which the organic HAP content exceeded the applicable emission limit in § 63.4690, and you used no thinners or cleaning materials that contained organic HAP, determined according to paragraph (a) of this section.

[68 FR 31760, May 28, 2003, as amended at 84 FR 7702, Mar. 4, 2019]

§ 63.4742 How do I demonstrate continuous compliance with the emission limitations?

(a) For each compliance period to demonstrate continuous compliance, you must use no coating for which the organic HAP content determined using Equation 2 of § 63.4741 exceeds the applicable emission limit in § 63.4690; and use no thinner or cleaning material that contains organic HAP, determined according to § 63.4741(a). A compliance period consists of 12 months. Each month after the end of the initial compliance period described in § 63.4740 is the end of a compliance period consisting of that month and the preceding 11 months.

(b) If you choose to comply with the emission limitations by using the compliant material option, the use of any coating, thinner, or cleaning material that does not meet the criteria specified in paragraph (a) of this section is a deviation from the emission limitations that must be reported as specified in §§ 63.4710(c)(6) and 63.4720(a)(5).

(c) As part of each semiannual compliance report required by § 63.4720, you must identify the coating operation(s) for which you used the compliant material option. If there were no deviations from the emission limitations in § 63.4690, submit a statement that the coating operation(s) was (were) in compliance with the emission limitations during the reporting period because you used no coating for which the organic HAP content exceeded the applicable emission limit in § 63.4690, and you used no thinner or cleaning material that contained organic HAP, determined according to § 63.4741(a).

(d) You must maintain records as specified in §§ 63.4730 and 63.4731.

COMPLIANCE REQUIREMENTS FOR THE EMISSION RATE WITHOUT ADD-ON CONTROLS OPTION

§ 63.4750 By what date must I conduct the initial compliance demonstration?

You must complete the initial compliance demonstration for the initial compliance period according to the requirements of § 63.4751. The initial compliance period begins on the applicable compliance date specified in § 63.4683 and ends on the last day of the 12th month following the compliance date. If the compliance date occurs on any day other than the first day of a month, then the initial compliance period extends through the end of that month plus the next 12 months. You must determine the mass of organic HAP emissions and volume of coating solids used each month and then calculate a 12-month organic HAP emission rate at the end of the initial 12-month compliance period. The initial compliance demonstration includes the calculations according to § 63.4751 and supporting documentation showing that during the initial compliance period the organic HAP emission rate was equal to or less than the applicable emission limit in § 63.4690.

§ 63.4751 How do I demonstrate initial compliance with the emission limitations?

You may use the emission rate without add-on controls option for any individual coating operation, for any group of coating operations in the affected source, or for all the coating operations in the affected source. You must

sfrattini on LAPJZKW1R2 with $$_JOB
VerDate Sep<11>2014 09:16 Apr 04, 2023 Jkt 256165 PO 00000 Frm 01000 Fmt 8010 Sfmt 8010 Q:\40\256165.XXX PC31

use either the compliant material option or the emission rate with add-on controls option for any coating operation in the affected source for which you do not use this option. To demonstrate initial compliance using the emission rate without add-on controls option, the coating operation or group of coating operations must meet the applicable emission limit in §63.4690. Any coating operation for which you use the emission rate without add-on controls option is not required to meet the operating limits or work practice standards required in §§63.4692 and 63.4693, respectively. You must meet all the requirements of this section to demonstrate initial compliance with the applicable emission limit in §63.4690 for the coating operation(s). When calculating the organic HAP emission rate according to this section, do not include any coatings, thinners, or cleaning materials used on coating operations for which you use the compliant material option or the emission rate with add-on controls option. You do not need to redetermine the mass of organic HAP in coatings, thinners, or cleaning materials that have been reclaimed onsite and reused in the coating operation(s) for which you use the emission rate without add-on controls option.

(a) *Determine the mass fraction of organic HAP for each material.* Determine the mass fraction of organic HAP for each coating, thinner, and cleaning material used during each month according to the requirements in §63.4741(a).

(b) *Determine the volume fraction of coating solids for each coating.* Determine the volume fraction of coating solids for each coating used during each month according to the requirements in §63.4741(b).

(c) *Determine the density of each material.* Determine the density of each coating, thinner, and cleaning material used during each month from test results using ASTM Method D1475–13 (incorporated by reference, see §63.14), information from the supplier or manufacturer of the material, or reference sources providing density or specific gravity data for pure materials. If there is disagreement between ASTM Method D1475–13 test results and such other information sources, the test results will take precedence.

(d) *Determine the volume of each material used.* Determine the volume (liters) of each coating, thinner, and cleaning material used during each month by measurement or usage records.

(e) *Calculate the mass of organic HAP emissions.* The mass of organic HAP emissions is the combined mass of organic HAP contained in all coatings, thinners, and cleaning materials used during each month minus the organic HAP in certain waste materials. Calculate it using Equation 1 of this section.

$$H_e = A + B + C - R_w \qquad \text{(Eq. 1)}$$

Where:

H_e = Total mass of organic HAP emissions during the month, grams.

A = Total mass of organic HAP in the coatings used during the month, grams, as calculated in Equation 1A (or 1A-alt) of this section.

B = Total mass of organic HAP in the thinners used during the month, grams, as calculated in Equation 1B of this section.

C = Total mass of organic HAP in the cleaning materials used during the month, grams, as calculated in Equation 1C of this section.

R_w = Total mass of organic HAP in waste materials sent or designated for shipment to a hazardous waste TSDF for treatment or disposal during the month, grams, determined according to paragraph (e)(4) of this section. (You may assign a value of zero to R_w if you do not wish to use this allowance.)

(1) Calculate the mass of organic HAP in the coatings used during the month, using Equation 1A of this section:

$$A = \sum_{i=1}^{m} \left(Vol_{c,i}\right)\left(D_{c,i}\right)\left(W_{c,i}\right) \qquad \text{(Eq. 1A)}$$

sfrattini on LAPJZKW1R2 with $$_JOB
VerDate Sep<11>2014 09:16 Apr 04, 2023 Jkt 256165 PO 00000 Frm 01001 Fmt 8010 Sfmt 8006 Q:\40\256165.XXX PC31
ER98AD03.002</MATH> ER98AD03.003</MATH>

Where:

A = Total mass of organic HAP in the coatings used during the month, grams.

$Vol_{c,i}$ = Total volume of coating, i, used during the month, liters.

$D_{c,i}$ = Density of coating, i, grams coating per liter coating.

$W_{c,i}$ = Mass fraction of organic HAP in coating, i, grams organic HAP per gram coating.

m = Number of different coatings used during the month.

(2) Calculate the mass of organic HAP in the thinners used during the month, using Equation 1B of this section:

$$B = \sum_{j=1}^{n} \left(Vol_{t,j}\right)\left(D_{t,j}\right)\left(W_{t,j}\right) \qquad \text{(Eq. 1B)}$$

Where:

B = Total mass of organic HAP in the thinners used during the month, grams.

$Vol_{t,j}$ = Total volume of thinner, j, used during the month, liters.

$D_{t,j}$ = Density of thinner, j, grams per liter.

$W_{t,j}$ = Mass fraction of organic HAP in thinner, j, grams organic HAP per gram thinner.

n = Number of different thinners used during the month.

(3) Calculate the mass of organic HAP in the cleaning materials used during the month using Equation 1C of this section:

$$C = \sum_{k=1}^{p} \left(Vol_{s,k}\right)\left(D_{s,k}\right)\left(W_{s,k}\right) \qquad \text{(Eq. 1C)}$$

Where:

C = Total mass of organic HAP in the cleaning materials used during the month, grams.

$Vol_{s,k}$ = Total volume of cleaning material, k, used during the month, liters.

$D_{s,k}$ = Density of cleaning material, k, grams per liter.

$W_{s,k}$ = Mass fraction of organic HAP in cleaning material, k, grams organic HAP per gram material.

p = Number of different cleaning materials used during the month.

(4) If you choose to account for the mass of organic HAP contained in waste materials sent or designated for shipment to a hazardous waste TSDF in Equation 1 of this section, then you must determine it according to paragraphs (e)(4)(i) through (iv) of this section.

(i) You may include in the determination only waste materials that are generated by coating operations for which you use Equation 1 of this section and that will be treated or disposed of by a facility regulated as a TSDF under 40 CFR part 262, 264, 265, or 266. The TSDF may be either off-site or on-site. You may not include organic HAP contained in wastewater.

(ii) You must determine either the amount of the waste materials sent to a TSDF during the month or the amount collected and stored during the month and designated for future transport to a TSDF. Do not include in your determination any waste materials sent to a TSDF during a month if you have already included them in the amount collected and stored during that month or a previous month.

(iii) Determine the total mass of organic HAP contained in the waste materials specified in paragraph (e)(4)(ii) of this section.

(iv) You may use any reasonable methodology to determine the amount of waste materials and the total mass of organic HAP they contain, and you must document your methodology as required in § 63.4730(h). To the extent

sfrattini on LAPJZKW1R2 with $$_JOB
VerDate Sep<11>2014 09:16 Apr 04, 2023 Jkt 256165 PO 00000 Frm 01002 Fmt 8010 Sfmt 8010 Q:\40\256165.XXX PC31
ER98AD03.004</MATH> ER98AD03.005</MATH>

that waste manifests include this information, they may be used as part of the documentation of the amount of waste materials and mass of organic HAP contained in them.

(f) *Calculate the total volume of coating solids used*. Determine the total volume of coating solids used which is the combined volume of coating solids for all the coatings used during each month, using Equation 2 of this section:

$$V_{st} = \sum_{i=1}^{m} \left(Vol_{c,i}\right)\left(V_{s,i}\right) \qquad \text{(Eq. 2)}$$

Where:

V_{st} = Total volume of coating solids used during the month, liters.

$Vol_{c,i}$ = Total volume of coating, i, used during the month, liters.

$V_{s,i}$ = Volume fraction of coating solids for coating, i, liter solids per liter coating, determined according to §63.4741(b).

m = Number of coatings used during the month.

(g) *Calculate the organic HAP emission rate*. Calculate the organic HAP emission rate for the 12-month compliance period, grams organic HAP per liter coating solids used, using Equation 3 of this section:

$$H_{yr} = \frac{\sum_{y-1}^{12} H_e}{\sum_{y-1}^{12} V_{st}} \qquad \text{(Eq. 3)}$$

Where:

H_{yr} = Organic HAP emission rate for the 12-month compliance period, grams organic HAP per liter coating solids.

H_e = Total mass of organic HAP emissions, grams, from all materials used during month, y, as calculated by Equation 1 of this section.

V_{st} = Total volume of coating solids used during month, y, liters, as calculated by Equation 2 of this section.

y = Identifier for months.

(h) *Compliance demonstration*. The organic HAP emission rate for the initial 12-month compliance period, calculated using Equation 3 of this section, must be less than or equal to the applicable emission limit in §63.4690. You must keep all records as required by §§63.4730 and 63.4731. As part of the Notification of Compliance Status required by §63.4710, you must identify the coating operation(s) for which you used the emission rate without add-on controls option and submit a statement that the coating operation(s) was (were) in compliance with the emission limitations during the initial compliance period because the organic HAP emission rate was less than or equal to the applicable emission limit in §63.4690, determined according to this section.

(i) *Alternative compliance demonstration*. As an alternative to paragraph (h) of this section, you may demonstrate initial compliance by identifying each organic HAP component in the coating(s) and conducting a performance test using Method 320 of appendix A to 40 CFR part 63 or NCASI Method ISS/FP A105.01 (incorporated by reference in §63.14) (for formaldehyde) or Method 326 of appendix A to 40 CFR part 63 (for isocyanates) to obtain an organic HAP emission factor (EF). The voluntary consensus standard ASTM D6348–03 (Reapproved 2010) (incorporated by reference, see §63.14) may be used as an alternative to using Method 320 under the conditions specified in paragraphs (i)(4)(i) and (ii) of this section.

(1) You must also calculate the mass of organic HAP emitted from the coatings used during the month using Equation 1A-alt of this section:

$$A = \sum_{i=1}^{m} \left(Vol_{c,i}\right)\left(D_{c,i}\right)\left(W_{c,i}\right)\left(EF_{c,i}\right) \qquad (Eq. 1A - alt)$$

Where:

A = Total mass of organic HAP in the coatings used during the month, grams.

$Vol_{c,i}$ = Total volume of coating, i, used during the month, liters.

$D_{c,j}$ = Density of coating, i, grams coating per liter of coatings.

$W_{c,i}$ = Mass fraction of organic HAP in coating, i, grams organic HAP per gram coating.

sfrattini on LAPJZKW1R2 with $$_JOB
VerDate Sep<11>2014 09:16 Apr 04, 2023 Jkt 256165 PO 00000 Frm 01003 Fmt 8010 Sfmt 8010 Q:\40\256165.XXX PC31
ER98AD03.006</MATH> ER98AD03.007</MATH> ER04MR19.010</GPH>

$EF_{c,i}$ = Organic HAP emission factor (three-run average from performance testing, evaluated as proportion of mass organic HAP emitted to mass of organic HAP in the coatings used during the performance test).

m = Number of different coatings used during the month.

(2) Calculate the organic HAP emission rate for the 12-month compliance period, grams organic HAP per liter coating solids used, using Equation 3 of this section.

(3) The organic HAP emission rate for the initial 12-month compliance period, calculated using Equation 3 of this section, must be less than or equal to the applicable emission limit in § 63.4690. You must keep all records as required by §§ 63.4730 and 63.4731. As part of the Notification of Compliance Status required by § 63.4710, you must identify the coating operation(s) for which you used the emission rate without add-on controls option and submit a statement that the coating operation(s) was (were) in compliance with the emission limitations during the initial compliance period because the organic HAP emission rate was less than or equal to the applicable emission limit in § 63.4690, determined according to this section.

(4) If ASTM D6348–03 (Reapproved 2010) is used, the conditions specified in paragraphs (i)(4)(i) and (ii) must be met.

(i) Test plan preparation and implementation in the Annexes to ASTM D6348–03 (Reapproved 2010), sections A1 through A8 are mandatory.

(ii) In ASTM D6348–03 (Reapproved 2010) Annex A5 (Analyte Spiking Technique), the percent (%) R must be determined for each target analyte (Equation A5.5 of ASTM D6348–03). In order for the test data to be acceptable for a compound, %R must be between 70 and 130 percent. If the %R value does not meet this criterion for a target compound, the test data are not acceptable for that compound, and the test must be repeated for that analyte following adjustment of the sampling and/or analytical procedure before the retest. The %R value for each compound must be reported in the test report, and all field measurements must be corrected with the calculated %R value for that compound using the following equation: Reported Result = (Measured Concentration in the Stack $\times$ 100)/%R.

[68 FR 31760, May 28, 2003, as amended at 84 FR 7702, Mar. 4, 2019]

§ 63.4752 How do I demonstrate continuous compliance with the emission limitations?

(a) To demonstrate continuous compliance, the organic HAP emission rate for each compliance period, calculated using Equation 3 of § 63.4751, must be less than or equal to the applicable emission limit in § 63.4690. A compliance period consists of 12 months. Each month after the end of the initial compliance period described in § 63.4750 is the end of a compliance period consisting of that month and the preceding 11 months. You must perform the calculations in § 63.4751(a) through (g) on a monthly basis using data from the previous 12 months of operation.

(b) If the organic HAP emission rate for any 12-month compliance period exceeded the applicable emission limit in § 63.4690, this is a deviation from the emission limitations for that compliance period and must be reported as specified in §§ 63.4710(c)(6) and 63.4720(a)(6).

(c) As part of each semiannual compliance report required by § 63.4720, you must identify the coating operation(s) for which you used the emission rate without add-on controls option. If there were no deviations from the emission limitations, you must submit a statement that the coating operation(s) was (were) in compliance with the emission limitations during the reporting period because the organic HAP emission rate for each compliance period was less than or equal to the applicable emission limit in § 63.4690, determined according to § 63.4751(a) through (g).

(d) You must maintain records as specified in §§ 63.4730 and 63.4731.

(e) If you use the alternative compliance demonstration described in § 63.4751(i), you must identify each organic HAP component in the coating(s) and conduct a performance test every 5 years to obtain an organic HAP emission factor (EF). You must use the following methods, as appropriate: Method 320 of appendix A to 40 CFR part 63

sfrattini on LAPJZKW1R2 with $$_JOB
VerDate Sep<11>2014 09:16 Apr 04, 2023 Jkt 256165 PO 00000 Frm 01004 Fmt 8010 Sfmt 8010 Q:\40\256165.XXX PC31

or NCASI Method ISS/FP A105.01 (incorporated by reference, see § 63.14) (for formaldehyde) or Method 326 of appendix A to 40 CFR part 63 (for isocyanates). The voluntary consensus standard ASTM D6348–03 (Reapproved 2010) (incorporated by reference, see § 63.14) may be used as an alternative to using Method 320 under the conditions specified in § 63.4751(i)(4)(i) and (ii).

[68 FR 31760, May 28, 2003, as amended at 84 FR 7703, Mar. 4, 2019]

COMPLIANCE REQUIREMENTS FOR THE EMISSION RATE WITH ADD-ON CONTROLS OPTION

§ 63.4760 By what date must I conduct performance tests and other initial compliance demonstrations?

(a) *New and reconstructed affected sources.* For a new or reconstructed affected source, you must meet the requirements of paragraphs (a)(1) through (4) of this section.

(1) All emission capture systems, add-on control devices, and CPMS must be installed and operating no later than the applicable compliance date specified in § 63.4683. Except for solvent recovery systems for which you conduct liquid-liquid material balances according to § 63.4761(j), you must conduct a performance test of each capture system and add-on control device according to §§ 63.4764, 63.4765, and 63.4766, and establish the operating limits required by § 63.4692 no later than 180 days after the applicable compliance date specified in § 63.4683. For a solvent recovery system for which you conduct liquid-liquid material balances according to § 63.4761(j), you must initiate the first material balance no later than 180 days after the applicable compliance date specified in § 63.4683.

(2) You must develop and begin implementing the work practice plan required by § 63.4693 no later than the compliance date specified in § 63.4683.

(3) You must complete the initial compliance demonstration for the initial compliance period according to the requirements of § 63.4761. The initial compliance period begins on the applicable compliance date specified in § 63.4683 and ends on the last day of the 12th month following the compliance date. If the compliance date occurs on any day other than the first day of a month, then the initial compliance period extends through the end of that month plus the next 12 months. You must determine the mass of organic HAP emissions and volume of coating solids used each month and then calculate a 12-month organic HAP emission rate at the end of the initial 12-month compliance period. The initial compliance demonstration includes the results of emission capture system and add-on control device performance tests conducted according to §§ 63.4764, 63.4765, and 63.4766; results of liquid-liquid material balances conducted according to § 63.4761(j); calculations according to § 63.4761 and supporting documentation showing that during the initial compliance period, the organic HAP emission rate was equal to or less than the emission limit in § 63.4690(a); the operating limits established during the performance tests and the results of the continuous parameter monitoring required by § 63.4768; and documentation of whether you developed and implemented the work practice plan required by § 63.4693.

(4) You do not need to comply with the operating limits for the emission capture system and add-on control device required by § 63.4692 until after you have completed the performance tests specified in paragraph (a)(1) of this section. Instead, you must maintain a log detailing the operation and maintenance of the emission capture system, add-on control device, and continuous parameter monitors during the period between the compliance date and the performance test. You must begin complying with the operating limits for your affected source on the date you complete the performance tests specified in paragraph (a)(1) of this section. The requirements in this paragraph (a)(4) do not apply to solvent recovery systems for which you conduct liquid-liquid material balances according to the requirements in § 63.4761(j).

(b) *Existing affected sources.* For an existing affected source, you must meet the requirements of paragraphs (b)(1) through (3) of this section.

(1) All emission capture systems, add-on control devices, and CPMS must be installed and operating no later than the applicable compliance date

sfrattini on LAPJZKW1R2 with $$_JOB
VerDate Sep<11>2014 09:16 Apr 04, 2023 Jkt 256165 PO 00000 Frm 01005 Fmt 8010 Sfmt 8010 Q:\40\256165.XXX PC31

specified in § 63.4683. Except for solvent recovery systems for which you conduct liquid-liquid material balances according to § 63.4761(j), you must conduct a performance test of each capture system and add-on control device according to the procedures in §§ 63.4764, 63.4765, and 63.4766 and establish the operating limits required by § 63.4692 no later than the applicable compliance date specified in § 63.4683. For a solvent recovery system for which you conduct liquid-liquid material balances according to § 63.4761(j), you must initiate the first material balance no later than the compliance date specified in § 63.4683.

(2) You must develop and begin implementing the work practice plan required by § 63.4693 no later than the compliance date specified in § 63.4683.

(3) You must complete the initial compliance demonstration for the initial compliance period according to the requirements of § 63.4761. The initial compliance period begins on the applicable compliance date specified in § 63.4683 and ends on the last day of the 12th month following the compliance date. If the compliance date occurs on any day other than the first day of a month, then the initial compliance period extends through the end of that month plus the next 12 months. You must determine the mass of organic HAP emissions and volume of coating solids used each month and then calculate a 12-month organic HAP emission rate at the end of the initial 12-month compliance period. The initial compliance demonstration includes the results of emission capture system and add-on control device performance tests conducted according to §§ 63.4764, 63.4765, and 63.4766; results of liquid-liquid material balances conducted according to § 63.4761(j); calculations according to § 63.4761 and supporting documentation showing that during the initial compliance period the organic HAP emission rate was equal to or less than the emission limit in § 63.4690(b); the operating limits established during the performance tests and the results of the continuous parameter monitoring required by § 63.4768; and documentation of whether you developed and implemented the work practice plan required by § 63.4693.

§ 63.4761 How do I demonstrate initial compliance?

(a) You may use the emission rate with add-on controls option for any coating operation, for any group of coating operations in the affected source, or for all of the coating operations in the affected source. You may include both controlled and uncontrolled coating operations in a group for which you use this option. You must use either the compliant material option or the emission rate without add-on controls option for any coating operation in the affected source for which you do not use the emission rate with add-on controls option. To demonstrate initial compliance, the coating operation(s) for which you use the emission rate with add-on controls option must meet the applicable emission limitations in §§ 63.4690, 63.4692, and 63.4693. You must meet all the requirements of this section to demonstrate initial compliance with the emission limitations. When calculating the organic HAP emission rate according to this section, do not include any coatings, thinners, or cleaning materials used on coating operations for which you use the compliant material option or the emission rate without add-on controls option. You do not need to redetermine the mass of organic HAP in coatings, thinners, or cleaning materials that have been reclaimed and reused in the coating operation(s) for which you use the emission rate with add-on controls option.

(b) *Compliance with operating limits.* Except as provided in § 63.4760(a)(4), and except for solvent recovery systems for which you conduct liquid-liquid material balances according to the requirements of § 63.4761(j), you must establish and demonstrate continuous compliance during the initial compliance period with the operating limits required by § 63.4692, using the procedures specified in §§ 63.4767 and 63.4768.

(c) *Compliance with work practice requirements.* You must develop, implement, and document your implementation of the work practice plan required by § 63.4693 during the initial compliance period, as specified in § 63.4730.

(d) *Compliance with emission limits.* You must follow the procedures in

sfrattini on LAPJZKW1R2 with $$_JOB
VerDate Sep<11>2014 09:16 Apr 04, 2023 Jkt 256165 PO 00000 Frm 01006 Fmt 8010 Sfmt 8010 Q:\40\256165.XXX PC31

paragraphs (e) through (n) of this section to demonstrate compliance with the applicable emission limit in §63.4690.

(e) *Determine the mass fraction of organic HAP, density, volume used, and volume fraction of coating solids.* Follow the procedures specified in §63.4751(a) through (d) to determine the mass fraction of organic HAP, density, and volume of each coating, thinner, and cleaning material used during each month; and the volume fraction of coating solids for each coating used during each month.

(f) *Calculate the total mass of organic HAP emissions before add-on controls.* Using Equation 1 of §63.4751, calculate the total mass of organic HAP emissions before add-on controls from all coatings, thinners, and cleaning materials used during each month in the coating operation or group of coating operations for which you use the emission rate with add-on controls option.

(g) *Calculate the organic HAP emission reduction for each controlled coating operation.* Determine the mass of organic HAP emissions reduced for each controlled coating operation during each month. The emission reduction determination quantifies the total organic HAP emissions that pass through the emission capture system and are destroyed or removed by the add-on control device. Use the procedures in paragraph (h) of this section to calculate the mass of organic HAP emission reduction for each controlled coating operation using an emission capture system and add-on control device other than a solvent recovery system for which you conduct liquid-liquid material balances. For each controlled coating operation using a solvent recovery system for which you conduct a liquid-liquid material balance, use the procedures in paragraph (j) of this section to calculate the organic HAP emission reduction.

(h) *Calculate the organic HAP emission reduction for each controlled coating operation not using liquid-liquid material balances.* For each controlled coating operation using an emission capture system and add-on control device other than a solvent recovery system for which you conduct liquid-liquid material balances, calculate the organic HAP emission reduction, using Equation 1 of this section. The calculation applies the emission capture system efficiency and add-on control device efficiency to the mass of organic HAP contained in the coatings, thinners, and cleaning materials that are used in the coating operation served by the emission capture system and add-on control device during each month. For any period of time a deviation specified in §63.4763(c) or (d) occurs in the controlled coating operation, including a deviation during a period of SSM, you must assume zero efficiency for the emission capture system and add-on control device. Equation 1 of this section treats the materials used during such a deviation as if they were used on an uncontrolled coating operation for the time period of the deviation.

$$H_c = \left(A_c + B_c + C_c - H_{unc}\right)\left(\frac{CE}{100} \times \frac{DRE}{100}\right) \qquad \text{(Eq. 1)}$$

Where:

H_c = Mass of organic HAP emission reduction for the controlled coating operation during the month, grams.

A_c = Total mass of organic HAP in the coatings used in the controlled coating operation during the month, grams.

B_c = Total mass of organic HAP in the thinners used in the controlled coating operation during the month, grams, as calculated in Equation 1B of this section.

C_c = Total mass of organic HAP in the cleaning materials used in the controlled coating operation during the month, grams, as calculated in Equation 1C of this section.

H_{unc} = Total mass of organic HAP in the coatings, thinners, and cleaning materials used during all deviations specified in §63.4763(c) and (d) that occurred during the month in the controlled coating operation, grams, as calculated in Equation 1D of this section.

sfrattini on LAPJZKW1R2 with $$_JOB
VerDate Sep<11>2014 09:16 Apr 04, 2023 Jkt 256165 PO 00000 Frm 01007 Fmt 8010 Sfmt 8010 Q:\40\256165.XXX PC31
ER98AD03.008</MATH>

CE = Capture efficiency of the emission capture system vented to the add-on control device, percent. Use the test methods and procedures specified in §§ 63.4764 and 63.4765 to measure and record capture efficiency.

DRE = Organic HAP destruction or removal efficiency of the add-on control device, percent. Use the test methods and procedures in §§ 63.4764 and 63.4766 to measure and record the organic HAP destruction or removal efficiency.

(1) Calculate the mass of organic HAP in the coatings used in the controlled coating operation, grams, using Equation 1A of this section:

$$A_c = \sum_{i=1}^{m} \left(Vol_{c,i}\right)\left(D_{c,i}\right)\left(W_{c,i}\right) \quad \text{(Eq. 1A)}$$

Where:

A_c = Total mass of organic HAP in the coatings used in the controlled coating operation, grams.

$Vol_{c,i}$ = Total volume of coating, i, used during the month, liters.

$D_{c,i}$ = Density of coating, i, grams per liter.

$W_{c,i}$ = mass fraction of organic HAP in coating, i, grams per gram.

m = Number of different coatings used.

(2) Calculate the mass of organic HAP in the thinners used in the controlled coating operation, grams, using Equation 1B of this section:

$$B_c = \sum_{j=1}^{n} \left(Vol_{t,j}\right)\left(D_{t,j}\right)\left(W_{t,j}\right) \quad \text{(Eq. 1B)}$$

Where:

B_c = Total mass of organic HAP in the thinners used in the controlled coating operation during the month, grams.

$Vol_{t,j}$ = Total volume of thinner, j, used during the month, liters.

$D_{t,j}$ = Density of thinner, j, grams per liter.

$W_{t,j}$ = Mass fraction of organic HAP in thinner, j, grams per gram.

n = Number of different thinners used.

(3) Calculate the mass of organic HAP in the cleaning materials used in the controlled coating operation during the month, grams, using Equation 1C of this section:

$$C_c = \sum_{k=1}^{p} \left(Vol_{s,k}\right)\left(D_{s,k}\right)\left(W_{s,k}\right) \quad \text{(Eq. 1C)}$$

Where:

C_c = Total mass of organic HAP in the cleaning materials used in the controlled coating operation during the month, grams.

$Vol_{s,k}$ = Total volume of cleaning material, k, used during the month, liters.

$D_{s,k}$ = Density of cleaning material, k, grams per liter.

$W_{s,k}$ = Mass fraction of organic HAP in cleaning material, k, grams per gram.

p = Number of different cleaning materials used.

(4) Calculate the mass of organic HAP in the coatings, thinners, and cleaning materials used in the controlled coating operation during deviations specified in § 63.4763(c) and (d), using Equation 1D of this section:

sfrattini on LAPJZKW1R2 with $$_JOB
VerDate Sep<11>2014 09:16 Apr 04, 2023 Jkt 256165 PO 00000 Frm 01008 Fmt 8010 Sfmt 8010 Q:\40\256165.XXX PC31
ER98AD03.009</MATH> ER98AD03.010</MATH> ER98AD03.011</MATH>

$$H_{unc} = \sum_{k=1}^{q} (Vol_h)(D_h)(W_h) \qquad \text{(Eq. 1D)}$$

Where:

H_{unc} = Total mass of organic HAP in the coatings, thinners, and cleaning materials used during all deviations specified in §63.4763(c) and (d) that occurred during the month in the controlled coating operation, grams.

Vol_h = Total volume of coating, thinner, or cleaning material, h, used in the controlled coating operation during deviations, liters.

D_h = Density of coating, thinner, or cleaning material, h, grams per liter.

W_h = mass fraction of organic HAP in coating, thinner, or cleaning material, h, grams organic HAP per gram coating.

q = Number of different coatings, thinners, or cleaning materials.

(i) [Reserved]

(j) *Calculate the organic HAP emission reduction for each controlled coating operation using liquid-liquid material balances.* For each controlled coating operation using a solvent recovery system for which you conduct liquid-liquid material balances, calculate the organic HAP emission reduction by applying the volatile organic matter collection and recovery efficiency to the mass of organic HAP contained in the coatings, thinners, and cleaning materials that are used in the coating operation controlled by the solvent recovery system during each month. Perform a liquid-liquid material balance for each month as specified in paragraphs (j)(1) through (6) of this section. Calculate the mass of organic HAP emission reduction by the solvent recovery system as specified in paragraph (j)(7) of this section.

(1) For each solvent recovery system, install, calibrate, maintain, and operate according to the manufacturer's specifications, a device that indicates the cumulative amount of volatile organic matter recovered by the solvent recovery system each month. The device must be initially certified by the manufacturer to be accurate to within ±2.0 percent of the mass of volatile organic matter recovered.

(2) For each solvent recovery system, determine the mass of volatile organic matter recovered for the month, grams, based on measurement with the device required in paragraph (j)(1) of this section.

(3) Determine the mass fraction of volatile organic matter for each coating, thinner, and cleaning material used in the coating operation controlled by the solvent recovery system during the month, grams volatile organic matter per gram coating. You may determine the volatile organic matter mass fraction using Method 24 of 40 CFR part 60, appendix A–7, one of the voluntary consensus standards specified in §63.4741(a)(2)(i) through (iv), or an EPA approved alternative method, or you may use information provided by the manufacturer or supplier of the coating. In the event of any inconsistency between information provided by the manufacturer or supplier and the results of Method 24 of 40 CFR part 60, appendix A–7, or an approved alternative method, the test method results will take precedence unless after consultation, a regulated source could demonstrate to the satisfaction of the enforcement agency that the formulation data were correct.

(4) Determine the density of each coating, thinner, and cleaning material used in the coating operation controlled by the solvent recovery system during the month, grams per liter, according to §63.4751(c).

(5) Measure the volume of each coating, thinner, and cleaning material used in the coating operation controlled by the solvent recovery system during the month, liters.

(6) Each month, calculate the solvent recovery system's volatile organic matter collection and recovery efficiency, using Equation 2 of this section:

sfrattini on LAPJZKW1R2 with $$_JOB
VerDate Sep<11>2014 09:16 Apr 04, 2023 Jkt 256165 PO 00000 Frm 01009 Fmt 8010 Sfmt 8010 Q:\40\256165.XXX PC31
ER98AD03.012</MATH>

$$R_v = 100 \times \frac{M_{vr}}{\sum_{j=1}^{m}(Vol_i)(D_i)(WV_{c,i}) + \sum_{j=1}^{n}(Vol_j)(D_j)(WV_{t,j}) + \sum_{k=1}^{p}(Vol_k)(D_k)(WV_{s,k})} \quad \text{(Eq. 2)}$$

Where:

R_v = Volatile organic matter collection and recovery efficiency of the solvent recovery system during the month, percent.

M_{vr} = Mass of volatile organic matter recovered by the solvent recovery system during the month, grams.

Vol_i = Volume of coating, i, used in the coating operation controlled by the solvent recovery system during the month, liters.

D_i = Density of coating, i, grams per liter.

$WV_{c,i}$ = Mass fraction of volatile organic matter for coating, i, grams volatile organic matter per gram coating.

Vol_j = Volume of thinner, j, used in the coating operation controlled by the solvent recovery system during the month, liters.

D_j = Density of thinner, j, grams per liter.

$WV_{t,j}$ = Mass fraction of volatile organic matter for thinner, j, grams volatile organic matter per gram thinner.

Vol_k = Volume of cleaning material, k, used in the coating operation controlled by the solvent recovery system during the month, liters.

D_k = Density of cleaning material, k, grams per liter.

$WV_{s,k}$ = Mass fraction of volatile organic matter for cleaning material, k, grams volatile organic matter per gram cleaning material.

m = Number of different coatings used in the coating operation controlled by the solvent recovery system during the month.

n = Number of different thinners used in the coating operation controlled by the solvent recovery system during the month.

p = Number of different cleaning materials used in the coating operation controlled by the solvent recovery system during the month.

(7) Calculate the mass of organic HAP emission reduction for the coating operation controlled by the solvent recovery system during the month, using Equation 3 of this section:

$$H_{CSR} = (A_{CSR} + B_{CSR} + C_{CSR})\left(\frac{R_v}{100}\right) \quad \text{(Eq. 3)}$$

Where:

H_{CSR} = Mass of organic HAP emission reduction for the coating operation controlled by the solvent recovery system during the month, grams.

A_{CSR} = Total mass of organic HAP in the coatings used in the coating operation controlled by the solvent recovery system, grams, calculated using Equation 3A of this section.

B_{CSR} = Total mass of organic HAP in the thinners used in the coating operation controlled by the solvent recovery system, grams, calculated using Equation 3B of this section.

C_{CSR} = Total mass of organic HAP in the cleaning materials used in the coating operation controlled by the solvent recovery system, grams, calculated using Equation 3C of this section.

R_V = Volatile organic matter collection and recovery efficiency of the solvent recovery system, percent, from Equation 2 of this section.

(i) Calculate the mass of organic HAP in the coatings used in the coating operation controlled by the solvent recovery system, grams, using Equation 3A of this section:

$$A_{CSR} = \sum_{i=1}^{m}(Vol_{c,i})(D_{c,i})(W_{c,i}) \quad \text{(Eq. 3A)}$$

Where:

A_{CSR} = Total mass of organic HAP in the coatings used in the coating operation

sfrattini on LAPJZKW1R2 with $$_JOB
VerDate Sep<11>2014 09:16 Apr 04, 2023 Jkt 256165 PO 00000 Frm 01010 Fmt 8010 Sfmt 8010 Q:\40\256165.XXX PC31
ER98AD03.013</MATH> ER98AD03.014</MATH> ER98AD03.015</MATH>

controlled by the solvent recovery system during the month, grams.

$Vol_{c,i}$ = Total volume of coating, i, used during the month in the coating operation controlled by the solvent recovery system, liters.

$D_{c,i}$ = Density of coating, i, grams per liter.

$W_{c,i}$ = Mass fraction of organic HAP in coating, i, grams per gram.

m = Number of different coatings used.

(ii) Calculate the mass of organic HAP in the thinners used in the coating operation controlled by the solvent recovery system, grams, using Equation 3B of this section:

$$B_{CSR} = \sum_{j=1}^{n} \left(Vol_{t,j}\right)\left(D_{t,j}\right)\left(W_{t,j}\right) \quad \text{(Eq. 3B)}$$

Where:

B_{CSR} = Total mass of organic HAP in the thinners used in the coating operation controlled by the solvent recovery system during the month, grams.

$Vol_{t,j}$ = Total volume of thinner, j, used during the month in the coating operation controlled by the solvent recovery system, liters.

$D_{t,j}$ = Density of thinner, j, grams per liter.

$W_{t,j}$ = Mass fraction of organic HAP in thinner, j, grams per gram.

n = Number of different thinners used.

(iii) Calculate the mass of organic HAP in the cleaning materials used in the coating operation controlled by the solvent recovery system during the month, grams, using Equation 3C of this section.

$$A_{CSR} = \sum_{k=1}^{p} \left(Vol_{s,k}\right)\left(D_{s,k}\right)\left(W_{s,k}\right) \quad \text{(Eq. 3C)}$$

Where:

C_{CSR} = Total mass of organic HAP in the cleaning materials used in the coating operation controlled by the solvent recovery system during the month, grams.

$Vol_{s,k}$ = Total volume of cleaning material, k, used during the month in the coating operation controlled by the solvent recovery system, liters.

$D_{s,k}$ = Density of cleaning material, k, grams per liter.

$W_{s,k}$ = Mass fraction of organic HAP in cleaning material, k, grams per gram.

p = Number of different cleaning materials used.

(k) *Calculate the total volume of coating solids used.* Determine the total volume of coating solids used, liters, which is the combined volume of coating solids for all the coatings used during each month in the coating operation or group of coating operations for which you use the emission rate with add-on controls option, using Equation 2 of §63.4751.

(l) *Calculate the mass of organic HAP emissions for each month.* Determine the mass of organic HAP emissions, grams, during each month, using Equation 4 of this section.

$$H_{HAP} = H_e - \sum_{i=1}^{q} \left(H_{c,i}\right) - \sum_{j=1}^{r} \left(H_{CSR,j}\right) \quad \text{(Eq. 4)}$$

Where:

H_{HAP} = Total mass of organic HAP emissions for the month, grams.

H_e = Total mass of organic HAP emissions before add-on controls from all the coatings, thinners, and cleaning materials

sfrattini on LAPJZKW1R2 with $$_JOB
VerDate Sep<11>2014 09:16 Apr 04, 2023 Jkt 256165 PO 00000 Frm 01011 Fmt 8010 Sfmt 8010 Q:\40\256165.XXX PC31
ER98AD03.016</MATH> ER98AD03.017</MATH> ER98AD03.018</MATH>

used during the month, grams, determined according to paragraph (f) of this section.

$H_{c,i}$ = Total mass of organic HAP emission reduction for controlled coating operation, i, not using a liquid-liquid material balance, during the month, grams, from Equation 1 of this section.

$H_{CSR,j}$ = Total mass of organic HAP emission reduction for coating operation, j, controlled by a solvent recovery system using a liquid-liquid material balance, during the month, grams, from Equation 3 of this section.

q = Number of controlled coating operations not using a liquid-liquid material balance.

r = Number of coating operations controlled by a solvent recovery system using a liquid-liquid material balance.

(m) *Calculate the organic HAP emission rate for the 12-month compliance period.* Determine the organic HAP emission rate for the 12-month compliance period, grams organic HAP per liter coating solids used, using Equation 5 of this section:

$$H_{annual} = \frac{\sum_{y=1}^{12} H_{HAP,y}}{\sum_{y=1}^{12} V_{st,y}} \qquad \text{(Eq. 5)}$$

Where:

H_{annual} = Organic HAP emission rate for the 12-month compliance period, grams organic HAP per liter coating solids.

$H_{HAP,y}$ = Organic HAP emission rate for month, y, determined according to Equation 4 of this section.

$V_{st,y}$ = Total volume of coating solids, liters, used during month, y, from Equation 2 of § 63.4751.

y = Identifier for months.

(n) *Compliance demonstration.* To demonstrate initial compliance with the emission limit, the organic HAP emission rate, calculated using Equation 5 of this section, must be less than or equal to the applicable emission limit in § 63.4690. You must keep all records as required by §§ 63.4730 and 63.4731. As part of the Notification of Compliance Status required by § 63.4710, you must identify the coating operation(s) for which you used the emission rate with add-on controls option and submit a statement that the coating operation(s) was (were) in compliance with the emission limitations during the initial compliance period because the organic HAP emission rate was less than or equal to the applicable emission limit in § 63.4690, and you achieved the operating limits required by § 63.4692 and the work practice standards required by § 63.4693.

[68 FR 31760, May 28, 2003, as amended at 84 FR 7703, Mar. 4, 2019]

§ 63.4762 [Reserved]

§ 63.4763 How do I demonstrate continuous compliance with the emission limitations?

(a) To demonstrate continuous compliance with the applicable emission limit in § 63.4690, the organic HAP emission rate for each compliance period, calculated using Equation 5 of § 63.4761, must be equal to or less than the applicable emission limit in § 63.4690. A compliance period consists of 12 months. Each month after the end of the initial compliance period described in § 63.4760 is the end of a compliance period consisting of that month and the preceding 11 months. You must perform the calculations in § 63.4761 on a monthly basis using data from the previous 12 months of operation.

(b) If the organic HAP emission rate for any 12-month compliance period exceeded the applicable emission limit in § 63.4690, this is a deviation from the emission limitation for that compliance period and must be reported as specified in §§ 63.4710(c)(6) and 63.4720(a)(7).

(c) You must demonstrate continuous compliance with each operating limit required by § 63.4692 that applies to you, as specified in Table 3 to this subpart.

(1) If an operating parameter is out of the allowed range specified in Table 3 to this subpart, this is a deviation from the operating limit that must be reported as specified in §§ 63.4710(c)(6) and 63.4720(a)(7).

(2) If an operating parameter deviates from the operating limit specified in Table 3 to this subpart, then you must assume that the emission capture system and add-on control device were achieving zero efficiency during the time period of the deviation. For the purposes of completing the compliance calculations specified in § 63.4761(h),

sfrattini on LAPJZKW1R2 with $$_JOB
VerDate Sep<11>2014 09:16 Apr 04, 2023 Jkt 256165 PO 00000 Frm 01012 Fmt 8010 Sfmt 8010 Q:\40\256165.XXX PC31
ER98AD03.019</MATH>

you must treat the materials used during a deviation on a controlled coating operation as if they were used on an uncontrolled coating operation for the time period of the deviation, as indicated in Equation 1 of § 63.4761.

(d) You must meet the requirements for bypass lines in § 63.4768(b) for controlled coating operations for which you do not conduct liquid-liquid material balances. If any bypass line is opened and emissions are diverted to the atmosphere when a controlled coating operation is running, this is a deviation that must be reported as specified in §§ 63.4710(c)(6) and 63.4720(a)(7). For the purposes of completing the compliance calculations specified in § 63.4761(h), you must treat the materials used during a deviation on a controlled coating operation as if they were used on an uncontrolled coating operation for the time period of the deviation, as indicated in Equation 1 of § 63.4761.

(e) You must demonstrate continuous compliance with the work practice standards in § 63.4693. If you did not develop a work practice plan, or you did not implement the plan, or you did not keep the records required by § 63.4730(k)(8), this is a deviation from the work practice standards that must be reported as specified in §§ 63.4710(c)(6) and 63.4720(a)(7).

(f) As part of each semiannual compliance report required in § 63.4720, you must identify the coating operation(s) for which you used the emission rate with add-on controls option. If there were no deviations from the emission limitations, submit a statement that you were in compliance with the emission limitations during the reporting period because the organic HAP emission rate for each compliance period was less than or equal to the applicable emission limit in § 63.4690, and you achieved the operating limits required by § 63.4692 and the work practice standards required by § 63.4693 during each compliance period.

(g) [Reserved]

(h) For existing sources, before September 3, 2019, consistent with §§ 63.6(e) and 63.7(e)(1), deviations that occur during a period of SSM of the emission capture system, add-on control device, or coating operation that may affect emission capture or control device efficiency are not violations if you demonstrate to the Administrator's satisfaction that you were operating in accordance with § 63.6(e)(1). The Administrator will determine whether deviations that occur during a period you identify as an SSM are violations, according to the provisions in § 63.6(e).

(i) [Reserved]

(j) You must maintain records as specified in §§ 63.4730 and 63.4731.

[68 FR 31760, May 28, 2003, as amended at 71 FR 20466, Apr. 20, 2006; 84 FR 7703, Mar. 4, 2019]

§ 63.4764 What are the general requirements for performance tests?

(a) You must conduct each performance test required by § 63.4760 according to the requirements in § 63.7(e)(1) and under the conditions in this section unless you obtain a waiver of the performance test according to the provisions in § 63.7(h).

(1) *Representative coating operation operating conditions.* You must conduct the performance test under representative operating conditions for the coating operation. Operations during periods of startup, shutdown, and nonoperation do not constitute representative conditions. You may not conduct performance tests during periods of malfunction. You must record the process information that is necessary to document operating conditions during the test and explain why the conditions represent normal operation. Upon request, you shall make available to the Administrator such records as may be necessary to determine the conditions of performance tests.

(2) *Representative emission capture system and add-on control device operating conditions.* You must conduct the performance test when the emission capture system and add-on control device are operating at a representative flow rate, and the add-on control device is operating at a representative inlet concentration. Representative conditions exclude periods of startup and shutdown. You may not conduct performance tests during periods of malfunction. You must record information that is necessary to document emission capture system and add-on control device operating conditions during the test

sfrattini on LAPJZKW1R2 with $$_JOB
VerDate Sep<11>2014 09:16 Apr 04, 2023 Jkt 256165 PO 00000 Frm 01013 Fmt 8010 Sfmt 8010 Q:\40\256165.XXX PC31

and explain why the conditions represent normal operation.

(b) You must conduct each performance test of an emission capture system according to the requirements in § 63.4765. You must conduct each performance test of an add-on control device according to the requirements in § 63.4766.

[68 FR 31760, May 28, 2003, as amended at 84 FR 7704, Mar. 4, 2019]

§ 63.4765 How do I determine the emission capture system efficiency?

You must use the procedures and test methods in this section to determine capture efficiency as part of the performance test required by § 63.4760.

(a) *Assuming 100 percent capture efficiency*. You may assume the capture system efficiency is 100 percent if both of the conditions in paragraphs (a)(1) and (2) of this section are met:

(1) The capture system meets the criteria in Method 204 of appendix M to 40 CFR part 51 for a PTE and directs all the exhaust gases from the enclosure to an add-on control device.

(2) All coatings, thinners, and cleaning materials used in the coating operation are applied within the capture system; coating solvent flash-off and coating, curing, and drying occurs within the capture system; and the removal or evaporation of cleaning materials from the surfaces they are applied to occurs within the capture system. For example, this criterion is not met if parts enter the open shop environment when being moved between a spray booth and a curing oven.

(b) *Measuring capture efficiency*. If the capture system does not meet both of the criteria in paragraphs (a)(1) and (2) of this section, then you must use one of the three protocols described in paragraphs (c), (d), and (e) of this section to measure capture efficiency. The capture efficiency measurements use TVH capture efficiency as a surrogate for organic HAP capture efficiency. For the protocols in paragraphs (c) and (d) of this section, the capture efficiency measurement must consist of three test runs. Each test run must be at least 3 hours in duration or the length of a production run, whichever is longer, up to 8 hours. For the purposes of this test, a production run means the time required for a single part to go from the beginning to the end of production, which includes surface preparation activities and drying or curing time.

(c) *Liquid-to-uncaptured-gas protocol using a temporary total enclosure or building enclosure*. The liquid-to-uncaptured-gas protocol compares the mass of liquid TVH in materials used in the coating operation to the mass of TVH emissions not captured by the emission capture system. Use a temporary total enclosure or a building enclosure and the procedures in paragraphs (c)(1) through (6) of this section to measure emission capture system efficiency using the liquid-to-uncaptured-gas protocol.

(1) Either use a building enclosure or construct an enclosure around the coating operation where coatings, thinners, and cleaning materials are applied, and all areas where emissions from these applied coatings and materials subsequently occur, such as flash-off, curing, and drying areas. The areas of the coating operation where capture devices collect emissions for routing to an add-on control device, such as the entrance and exit areas of an oven or spray booth, must also be inside the enclosure. The enclosure must meet the applicable definition of a temporary total enclosure or building enclosure in Method 204 of appendix M to 40 CFR part 51.

(2) Use Method 204A or 204F of appendix M to 40 CFR part 51 to determine the mass fraction of TVH liquid input from each coating, thinner, and cleaning material used in the coating operation during each capture efficiency test run. To make the determination, substitute TVH for each occurrence of the term volatile organic compounds (VOC) in the methods.

(3) Use Equation 1 of this section to calculate the total mass of TVH liquid input from all the coatings, thinners, and cleaning materials used in the coating operation during each capture efficiency test run.

sfrattini on LAPJZKW1R2 with $$_JOB
VerDate Sep<11>2014 09:16 Apr 04, 2023 Jkt 256165 PO 00000 Frm 01014 Fmt 8010 Sfmt 8010 Q:\40\256165.XXX PC31

$$TVH_{used} = \sum_{i=1}^{n} (TVH_i)(Vol_i)(D_i) \qquad \text{(Eq. 1)}$$

Where:

TVH_{used} = Mass of liquid TVH in materials used in the coating operation during the capture efficiency test run, grams.

TVH_i = Mass fraction of TVH in coating, thinner, or cleaning material, i, that is used in the coating operation during the capture efficiency test run, grams TVH per gram material.

Vol_i = Total volume of coating, thinner, or cleaning material, i, used in the coating operation during the capture efficiency test run, liters.

D_i = Density of coating, thinner, or cleaning material, i, grams material per liter material.

n = Number of different coatings, thinners, and cleaning materials used in the coating operation during the capture efficiency test run.

(4) Use Method 204D or E of appendix M to 40 CFR part 51 to measure the total mass, grams, of TVH emissions that are not captured by the emission capture system; they are measured as they exit the temporary total enclosure or building enclosure during each capture efficiency test run. To make the measurement, substitute TVH for each occurrence of the term VOC in the methods.

(i) Use Method 204D of appendix M to 40 CFR part 51 if the enclosure is a temporary total enclosure.

(ii) Use Method 204E of appendix M to 40 CFR part 51 if the enclosure is a building enclosure. During the capture efficiency measurement, all organic compound emitting operations inside the building enclosure, other than the coating operation for which capture efficiency is being determined, must be shut down, but all fans and blowers must be operating normally.

(5) For each capture efficiency test run, determine the percent capture efficiency of the emission capture system using Equation 2 of this section:

$$CE = \frac{(TVH_{used} - TVH_{uncaptured})}{TVH_{used}} \times 100 \qquad \text{(Eq. 2)}$$

Where:

CE = Capture efficiency of the emission capture system vented to the add-on control device, percent.

TVH_{used} = Total mass of TVH liquid input used in the coating operation during the capture efficiency test run, grams.

$TVH_{uncaptured}$ = Total mass of TVH that is not captured by the emission capture system and that exits from the temporary total enclosure or building enclosure during the capture efficiency test run, grams, determined according to paragraph (c)(4) of this section.

(6) Determine the capture efficiency of the emission capture system as the average of the capture efficiencies measured in the three test runs.

(d) *Gas-to-gas protocol using a temporary total enclosure or a building enclosure.* The gas-to-gas protocol compares the mass of TVH emissions captured by the emission capture system to the mass of TVH emissions not captured. Use a temporary total enclosure or a building enclosure and the procedures in paragraphs (d)(1) through (5) of this section to measure emission capture system efficiency using the gas-to-gas protocol.

(1) Either use a building enclosure or construct an enclosure around the coating operation where coatings, thinners, and cleaning materials are applied, and all areas where emissions from these applied coatings and materials subsequently occur, such as flash-off, curing, and drying areas. The areas of the coating operation where capture devices collect emissions generated by the coating operation for routing to an add-on control device, such as the entrance and exit areas of an oven or a

sfrattini on LAPJZKW1R2 with $$_JOB
VerDate Sep<11>2014 09:16 Apr 04, 2023 Jkt 256165 PO 00000 Frm 01015 Fmt 8010 Sfmt 8010 Q:\40\256165.XXX PC31
ER98AD03.020</MATH> ER98AD03.021</MATH>

spray booth, must also be inside the enclosure. The enclosure must meet the applicable definition of a temporary total enclosure or building enclosure in Method 204 of appendix M to 40 CFR part 51.

(2) Use Method 204B or 204C of appendix M to 40 CFR part 51 to measure the total mass, grams, of TVH emissions captured by the emission capture system during each capture efficiency test run as measured at the inlet to the add-on control device. To make the measurement, substitute TVH for each occurrence of the term VOC in the methods.

(i) The sampling points for the Method 204B or 204C of appendix M to 40 CFR part 51 measurement must be upstream from the add-on control device and must represent total emissions routed from the capture system and entering the add-on control device.

(ii) If multiple emission streams from the capture system enter the add-on control device without a single common duct, then the emissions entering the add-on control device must be simultaneously measured in each duct, and the total emissions entering the add-on control device must be determined.

(3) Use Method 204D or 204E of appendix M to 40 CFR part 51 to measure the total mass, grams, of TVH emissions that are not captured by the emission capture system; they are measured as they exit the temporary total enclosure or building enclosure during each capture efficiency test run. To make the measurement, substitute TVH for each occurrence of the term VOC in the methods.

(i) Use Method 204D of appendix M to 40 CFR part 51 if the enclosure is a temporary total enclosure.

(ii) Use Method 204E of appendix M to 40 CFR part 51 if the enclosure is a building enclosure. During the capture efficiency measurement, all organic compound emitting operations inside the building enclosure, other than the coating operation for which capture efficiency is being determined, must be shut down, but all fans and blowers must be operating normally.

(4) For each capture efficiency test run, determine the percent capture efficiency of the emission capture system using Equation 3 of this section:

$$CE = \frac{TVH_{captured}}{\left(TVH_{captured} + TVH_{uncaptured}\right)} \times 100 \qquad \text{(Eq. 3)}$$

Where:

CE = Capture efficiency of the emission capture system vented to the add-on control device, percent.

$TVH_{captured}$ = Total mass of TVH captured by the emission capture system as measured at the inlet to the add-on control device during the emission capture efficiency test run, grams, determined according to paragraph (d)(2) of this section.

$TVH_{uncaptured}$ = Total mass of TVH that is not captured by the emission capture system and that exits from the temporary total enclosure or building enclosure during the capture efficiency test run, grams, determined according to paragraph (d)(3) of this section.

(5) Determine the capture efficiency of the emission capture system as the average of the capture efficiencies measured in the three test runs.

(e) *Alternative capture efficiency protocol.* As an alternative to the procedures specified in paragraphs (c) and (d) of this section, you may determine capture efficiency using any other capture efficiency protocol and test methods that satisfy the criteria of either the DQO or LCL approach as described in appendix A to subpart KK of this part.

§ 63.4766 How do I determine the add-on control device emission destruction or removal efficiency?

You must use the procedures and test methods in this section to determine the add-on control device emission destruction or removal efficiency as part of the performance test required by § 63.4760. You must conduct three test

sfrattini on LAPJZKW1R2 with $$_JOB
VerDate Sep<11>2014 09:16 Apr 04, 2023 Jkt 256165 PO 00000 Frm 01016 Fmt 8010 Sfmt 8010 Q:\40\256165.XXX PC31
ER98AD03.022</MATH>

runs as specified in §63.7(e)(3), and each test run must last at least 1 hour.

(a) For all types of add-on control devices, use the test methods specified in paragraphs (a)(1) through (5) of this section.

(1) Use Method 1 or 1A of appendix A–1 to 40 CFR part 60, as appropriate, to select sampling sites and velocity traverse points.

(2) Use Method 2, 2A, 2C, 2D, or 2F of appendix A–1 to 40 CFR part 60, or Method 2G of appendix A–2 to 40 CFR part 60, as appropriate, to measure gas volumetric flow rate.

(3) Use Method 3, 3A, or 3B of appendix A–2 to 40 CFR part 60, as appropriate, for gas analysis to determine dry molecular weight. You may also use as an alternative to Method 3B, the manual method for measuring the oxygen, carbon dioxide, and carbon monoxide content of exhaust gas in ANSI/ASME PTC 19.10–1981, ''Flue and Exhaust Gas Analyses [Part 10, Instruments and Apparatus]'' (incorporated by reference, see §63.14).

(4) Use Method 4 of appendix A–3 to 40 CFR part 60 to determine stack gas moisture.

(5) Methods for determining gas volumetric flow rate, dry molecular weight, and stack gas moisture must be performed, as applicable, during each test run.

(b) Measure total gaseous organic mass emissions as carbon at the inlet and outlet of the add-on control device simultaneously, using Method 25 or 25A of appendix A–7 to 40 CFR part 60, and Method 320 or 326 of appendix A to 40 CFR part 63, as specified in paragraphs (b)(1) through (5) of this section. The voluntary consensus standard ASTM D6348–03 (Reapproved 2010) (incorporated by reference in §63.14) may be used as an alternative to using Method 320 if the conditions specified in §63.4751(i)(4)(i) and (ii) are met. You must use the same method for both the inlet and outlet measurements.

(1) Use Method 25 of appendix A–7 to 40 CFR part 60 if the add-on control device is an oxidizer, and you expect the total gaseous organic concentration as carbon to be more than 50 parts per million (ppm) at the control device outlet.

(2) Use Method 25A of appendix A–7 to 40 CFR part 60 if the add-on control device is an oxidizer, and you expect the total gaseous organic concentration as carbon to be 50 ppm or less at the control device outlet.

(3) Use Method 25A of appendix A–7 to 40 CFR part 60 if the add-on control device is not an oxidizer.

(4) If Method 25A is used, and if formaldehyde is a major organic HAP component of the surface coating exhaust stream, use Method 320 of appendix A to 40 CFR part 63 or NCASI Method ISS/FP A105.01 (incorporated by reference in §63.14) or ASTM D6348–03 (Reapproved 2010) (incorporated by reference in §63.14) to determine formaldehyde concentration.

(5) In addition to Method 25 or 25A, use Method 326 of appendix A to 40 CFR part 63 if isocyanate is a major organic HAP component of the surface coating exhaust stream.

(c) If two or more add-on control devices are used for the same emission stream, then you must measure emissions at the outlet of each device. For example, if one add-on control device is a concentrator with an outlet for the high-volume, dilute stream that has been treated by the concentrator, and a second add-on control device is an oxidizer with an outlet for the low-volume, concentrated stream that is treated with the oxidizer, you must measure emissions at the outlet of the oxidizer and the high volume dilute stream outlet of the concentrator.

(d) For each test run, determine the total gaseous organic emissions mass flow rates for the inlet and the outlet of the add-on control device, using Equation 1 of this section. If there is more than one inlet or outlet to the add-on control device, you must calculate the total gaseous organic mass flow rate using Equation 1 of this section for each inlet and each outlet and then total all of the inlet emissions and total all of the outlet emissions. The mass emission rates for formaldehyde and individual isocyanate must be determined separately.

sfrattini on LAPJZKW1R2 with $$_JOB
VerDate Sep<11>2014 09:16 Apr 04, 2023 Jkt 256165 PO 00000 Frm 01017 Fmt 8010 Sfmt 8010 Q:\40\256165.XXX PC31

$$M_f = Q_{sd} C_c MW (41.6)(10^{-6}) \qquad (Eq. 1)$$

Where:

M_f = Total gaseous organic emissions mass flow rate, grams per hour (h).

MW = Molecular weight of analyte of interest (12 for Method 25 and 25A results).

C_c = Concentration of organic compounds in the vent gas (as carbon if determined by Method 25 or Method 25A), parts per million by volume (ppmv), dry basis.

Q_{sd} = Volumetric flow rate of gases entering or exiting the add-on control device, as determined by Method 2, 2A, 2C, 2D, 2F, or 2G, dry standard cubic meters/hour (dscm/h).

41.6 = Conversion factor for molar volume, gram-moles per cubic meter (mol/m³) (@293 Kelvin (K) and 760 millimeters of mercury (mmHg)).

(e) For each test run, determine the add-on control device organic emissions destruction or removal efficiency, using Equation 2 of this section:

$$DRE = 100 \times \frac{M_{fi} - M_{fo}}{M_{fi}} \qquad (Eq. 2)$$

Where:

DRE = Organic emissions destruction or removal efficiency of the add-on control device, percent.

M_{fi} = Total gaseous organic emissions mass flow rate at the inlet(s) to the add-on control device, using Equation 1 of this section, grams/h.

M_{fo} = total gaseous organic emissions mass flow rate at the outlet(s) of the add-on control device, using Equation 1 of this section, grams/h.

(f) Determine the emission destruction or removal efficiency of the add-on control device as the average of the efficiencies determined in the three test runs and calculated in Equation 2 of this section. Destruction and removal efficiency must be determined independently for formaldehyde and isocyanates.

[68 FR 31760, May 28, 2003, as amended at 84 FR 7704, Mar. 4, 2019]

§ 63.4767 How do I establish the emission capture system and add-on control device operating limits during the performance test?

During the performance test required by § 63.4760 and described in §§ 63.4764, 63.4765, and 63.4766, you must establish the operating limits required by § 63.4692 according to this section, unless you have received approval for alternative monitoring and operating limits under § 63.8(f) as specified in § 63.4692.

(a) *Thermal oxidizers.* If your add-on control device is a thermal oxidizer, establish the operating limits according to paragraphs (a)(1) and (2) of this section.

(1) During the performance test, you must monitor and record the combustion temperature at least once every 15 minutes during each of the three test runs. You must monitor the temperature in the firebox of the thermal oxidizer or immediately downstream of the firebox before any substantial heat exchange occurs.

(2) Use the data collected during the performance test to calculate and record the average combustion temperature maintained during the performance test. This average combustion temperature is the minimum operating limit for your thermal oxidizer.

(b) *Catalytic oxidizers.* If your add-on control device is a catalytic oxidizer, establish the operating limits according to either paragraphs (b)(1) and (2) or paragraphs (b)(3) and (4) of this section.

(1) During the performance test, you must monitor and record the temperature before the catalyst bed and the temperature difference across the catalyst bed at least once every 15 minutes during each of the three test runs.

(2) Use the data collected during the performance test to calculate and record the average temperature difference across the catalyst bed maintained during the performance test. This is the minimum operating limit for your catalytic oxidizer.

(3) As an alternative to monitoring the temperature difference across the catalyst bed, you may monitor the temperature at the inlet to the catalyst bed and implement a site-specific inspection and maintenance plan for your catalytic oxidizer as specified in paragraph (b)(4) of this section. During

sfrattini on LAPJZKW1R2 with $$_JOB
VerDate Sep<11>2014 09:16 Apr 04, 2023 Jkt 256165 PO 00000 Frm 01018 Fmt 8010 Sfmt 8010 Q:\40\256165.XXX PC31
ER04MR19.000</GPH> ER98AD03.024</MATH>

the performance test, you must monitor and record the temperature before the catalyst bed at least once every 15 minutes during each of the three test runs. Use the data collected during the performance test to calculate and record the average temperature before the catalyst bed during the performance test. This is the minimum operating limit for your catalytic oxidizer. (NOTE: For regenerative catalytic oxidizers, the inlet to the catalyst is defined as the general zone between the inlets to the catalyst beds located in the multiple regeneration towers; select either a monitoring location or multiple monitoring locations. If multiple monitoring locations are selected, either establish separate operating limits for each location or calculate an average of the multiple measurements and set a single operating limit.)

(4) You must develop and implement an inspection and maintenance plan for your catalytic oxidizer(s) for which you elect to monitor according to paragraph (b)(3) of this section. The plan must address, at a minimum, the elements specified in paragraphs (b)(4)(i) through (iii) of this section.

(i) Annual sampling and analysis of the catalyst activity (*i.e,* conversion efficiency) following the recommended procedures from the manufacturer, the catalyst supplier, or the catalyst test provider.

(ii) Monthly inspection of the oxidizer system, including the burner assembly and fuel supply lines for problems and, as necessary, adjust the equipment to assure proper air-to-fuel mixtures.

(iii) Annual internal and monthly external visual inspection of the catalyst bed to check for channeling, abrasion, and settling. If problems are found, you must take corrective action consistent with the manufacturer's recommendation and conduct a new performance test to determine destruction efficiency according to §63.4766.

(c) *Carbon adsorbers.* If your add-on control device is a carbon adsorber, establish the operating limits according to paragraphs (c)(1) and (2) of this section.

(1) You must monitor and record the total regeneration desorbing gas (*e.g.,* steam or nitrogen) mass flow for each regeneration cycle, and the carbon bed temperature after each carbon bed regeneration and cooling cycle for the regeneration cycle either immediately preceding or immediately following the performance test.

(2) The operating limits for your carbon adsorber are the minimum total desorbing gas mass flow recorded during the regeneration cycle, and the maximum carbon bed temperature recorded after the cooling cycle.

(d) *Condensers.* If your add-on control device is a condenser, establish the operating limits according to paragraphs (d)(1) and (2) of this section.

(1) During the performance test, you must monitor and record the condenser outlet (product side) gas temperature at least once every 15 minutes during each of the three test runs.

(2) Use the data collected during the performance test to calculate and record the average condenser outlet (product side) gas temperature maintained during the performance test. This average condenser outlet gas temperature is the maximum operating limit for your condenser.

(e) *Concentrators.* If your add-on control device includes a concentrator, you must establish operating limits for the concentrator according to paragraphs (e)(1) through (4) of this section.

(1) During the performance test, you must monitor and record the desorption concentrate stream gas temperature at least once every 15 minutes during each of the three runs of the performance test.

(2) Use the data collected during the performance test to calculate and record the average temperature. This is the minimum operating limit for the desorption concentrate gas stream temperature.

(3) During the performance test, you must monitor and record the pressure drop of the dilute stream across the concentrator at least once every 15 minutes during each of the three runs of the performance test.

(4) Use the data collected during the performance test to calculate and record the average pressure drop. This is the maximum operating limit for the dilute stream across the concentrator.

(f) *Emission capture system.* For each capture device that is not part of a

sfrattini on LAPJZKW1R2 with $$_JOB
VerDate Sep<11>2014 09:16 Apr 04, 2023 Jkt 256165 PO 00000 Frm 01019 Fmt 8010 Sfmt 8010 Q:\40\256165.XXX PC31

PTE that meets the criteria of § 63.4765(a), establish an operating limit for either the gas volumetric flow rate or duct static pressure, as specified in paragraphs (f)(1) and (2) of this section. The operating limit for a PTE is specified in Table 3 to this subpart.

(1) During the capture efficiency determination required by § 63.4760 and described in §§ 63.4764 and 63.4765, you must monitor and record either the gas volumetric flow rate or the duct static pressure for each separate capture device in your emission capture system at least once every 15 minutes during each of the three test runs at a point in the duct between the capture device and the add-on control device inlet.

(2) Calculate and record the average gas volumetric flow rate or duct static pressure for the three test runs for each capture device. This average gas volumetric flow rate or duct static pressure is the minimum operating limit for that specific capture device.

§ 63.4768 What are the requirements for continuous parameter monitoring system installation, operation, and maintenance?

(a) *General*. You must install, operate, and maintain each CPMS specified in paragraphs (c), (e), (f), and (g) of this section according to paragraphs (a)(1) through (6) of this section. You must install, operate, and maintain each CPMS specified in paragraphs (b) and (d) of this section according to paragraphs (a)(3) through (5) of this section.

(1) The CPMS must complete a minimum of one cycle of operation for each successive 15-minute period. You must have a minimum of four equally spaced successive cycles of CPMS operation in 1 hour.

(2) You must determine the average of all recorded readings for each successive 3-hour period of the emission capture system and add-on control device operation.

(3) You must record the results of each inspection, calibration, and validation check of the CPMS.

(4) You must maintain the CPMS at all times and have available necessary parts for routine repairs of the monitoring equipment.

(5) You must operate the CPMS and collect emission capture system and add-on control device parameter data at all times that a controlled coating operation is operating, except during monitoring malfunctions, associated repairs, and required quality assurance or control activities (including, if applicable, calibration checks and required zero and span adjustments).

(6) You must not use emission capture system or add-on control device parameter data recorded during periods when the control device is not receiving emissions, monitoring malfunctions, associated repairs, out-of-control periods, or required quality assurance or control activities when calculating data averages. You must use all the data collected during all other periods in calculating the data averages for determining compliance with the emission capture system and add-on control device operating limits.

(7) A monitoring malfunction is any sudden, infrequent, not reasonably preventable failure of the CPMS to provide valid data. Monitoring failures that are caused in part by poor maintenance or careless operation are not malfunctions. Any period for which the monitoring system is out-of-control and data are not available for required calculations is a deviation from the monitoring requirements.

(b) *Capture system bypass line*. You must meet the requirements of paragraphs (b)(1) and (2) of this section for each emission capture system that contains bypass lines that could divert emissions away from the add-on control device to the atmosphere.

(1) You must monitor or secure the valve or closure mechanism controlling the bypass line in a nondiverting position in such a way that the valve or closure mechanism cannot be opened without creating a record that the valve was opened. The method used to monitor or secure the valve or closure mechanism must meet one of the requirements specified in paragraphs (b)(1)(i) through (iv) of this section.

(i) *Flow control position indicator*. Install, calibrate, maintain, and operate according to the manufacturer's specifications a flow control position indicator that takes a reading at least once every 15 minutes and provides a record indicating whether the emissions are directed to the add-on control device or

sfrattini on LAPJZKW1R2 with $$_JOB
VerDate Sep<11>2014 09:16 Apr 04, 2023 Jkt 256165 PO 00000 Frm 01020 Fmt 8010 Sfmt 8010 Q:\40\256165.XXX PC31

diverted from the add-on control device. The time of occurrence and flow control position must be recorded, as well as every time the flow direction is changed. The flow control position indicator must be installed at the entrance to any bypass line that could divert the emissions away from the add-on control device to the atmosphere.

(ii) *Car-seal or lock-and-key valve closures.* Secure any bypass line valve in the closed position with a car-seal or a lock-and-key type configuration. You must visually inspect the seal or closure mechanism at least once every month to ensure that the valve is maintained in the closed position, and the emissions are not diverted away from the add-on control device to the atmosphere.

(iii) *Valve closure monitoring.* Ensure that any bypass line valve is in the closed (non-diverting) position through monitoring of valve position at least once every 15 minutes. You must inspect the monitoring system at least once every month to verify that the monitor will indicate valve position.

(iv) *Automatic shutdown system.* Use an automatic shutdown system in which the coating operation is stopped when flow is diverted by the bypass line away from the add-on control device to the atmosphere when the coating operation is running. You must inspect the automatic shutdown system at least once every month to verify that it will detect diversions of flow and shut down the coating operation.

(2) If any bypass line is opened and there was a deviation from the applicable emission limitation, you must include a description of why the bypass line was opened and the length of time it remained open in the semiannual compliance reports required in §63.4720.

(c) *Thermal oxidizers and catalytic oxidizers.* If you are using a thermal oxidizer or catalytic oxidizer as an add-on control device (including those used with concentrators or with carbon adsorbers to treat desorbed concentrate streams), you must comply with the requirements in paragraphs (c)(1) through (3) of this section:

(1) For a thermal oxidizer, install a gas temperature monitor in the firebox of the thermal oxidizer or in the duct immediately downstream of the firebox before any substantial heat exchange occurs.

(2) For a catalytic oxidizer, you must install a gas temperature monitor in the gas stream immediately before the catalyst bed, and if you established operating limits according to §63.4767(b)(1) and (2), also install a gas temperature monitor in the gas stream immediately after the catalyst bed.

(i) If you establish operating limits according to §63.4767(b)(1) and (2), then you must install the gas temperature monitors both upstream and downstream of the catalyst bed. The temperature monitors must be in the gas stream immediately before and after the catalyst bed to measure the temperature difference across the bed.

(ii) If you establish operating limits according to §63.4767(b)(3) and (4), then you must install a gas temperature monitor upstream of the catalyst bed. The temperature monitor must be in the gas stream immediately before the catalyst bed to measure the temperature.

(3) For all thermal oxidizers and catalytic oxidizers, you must meet the requirements in paragraphs (a) and (c)(3)(i) through (vii) of this section for each gas temperature monitoring device.

(i) Locate the temperature sensor in a position that provides a representative temperature.

(ii) Use a temperature sensor with a measurement sensitivity of 4 degrees Fahrenheit or 0.75 percent of the temperature value, whichever is larger.

(iii) Shield the temperature sensor system from electromagnetic interference and chemical contaminants.

(iv) If a gas temperature chart recorder is used, it must have a measurement sensitivity in the minor division of at least 20 degrees Fahrenheit.

(v) Perform an electronic calibration at least semiannually according to the procedures in the manufacturer's owners manual. Following the electronic calibration, you must conduct a temperature sensor validation check in which a second or redundant temperature sensor placed nearby the process temperature sensor must yield a reading within 30 degrees Fahrenheit of the process temperature sensor reading.

sfrattini on LAPJZKW1R2 with $$_JOB
VerDate Sep<11>2014 09:16 Apr 04, 2023 Jkt 256165 PO 00000 Frm 01021 Fmt 8010 Sfmt 8010 Q:\40\256165.XXX PC31

(vi) Conduct calibration and validation checks any time the sensor exceeds the manufacturer's specified maximum operating temperature range or install a new temperature sensor.

(vii) At least monthly, inspect components for integrity and electrical connections for continuity, oxidation, and galvanic corrosion.

(d) *Carbon adsorbers.* If you are using a carbon adsorber as an add-on control device, you must monitor the total regeneration desorbing gas (*e.g.*, steam or nitrogen) mass flow for each regeneration cycle, the carbon bed temperature after each regeneration and cooling cycle, and comply with paragraphs (a)(3) through (5) and (d)(1) and (2) of this section.

(1) The regeneration desorbing gas mass flow monitor must be an integrating device having a measurement sensitivity of plus or minus 10 percent capable of recording the total regeneration desorbing gas mass flow for each regeneration cycle.

(2) The carbon bed temperature monitor must have a measurement sensitivity of 1 percent of the temperature recorded or 1 degree Fahrenheit, whichever is greater, and must be capable of recording the temperature within 15 minutes of completing any carbon bed cooling cycle.

(e) *Condensers.* If you are using a condenser, you must monitor the condenser outlet (product side) gas temperature and comply with paragraphs (a) and (e)(1) and (2) of this section.

(1) The gas temperature monitor must have a measurement sensitivity of 1 percent of the temperature recorded or 1 degree Fahrenheit, whichever is greater.

(2) The temperature monitor must provide a gas temperature record at least once every 15 minutes.

(f) *Concentrators.* If you are using a concentrator, such as a zeolite wheel or rotary carbon bed concentrator, you must comply with the requirements in paragraphs (f)(1) and (2) of this section.

(1) You must install a temperature monitor in the desorption gas stream. The temperature monitor must meet the requirements in paragraphs (a) and (c)(3) of this section.

(2) You must install a device to monitor pressure drop across the zeolite wheel or rotary carbon bed. The pressure monitoring device must meet the requirements in paragraphs (a) and (f)(2)(i) through (vii) of this section.

(i) Locate the pressure sensor(s) in or as close to a position that provides a representative measurement of the pressure.

(ii) Minimize or eliminate pulsating pressure, vibration, and internal and external corrosion.

(iii) Use a gauge with a minimum tolerance of 0.5 inch of water or a transducer with a minimum tolerance of 1 percent of the pressure range.

(iv) Check the pressure tap daily.

(v) Using a manometer, check gauge calibration quarterly and transducer calibration monthly.

(vi) Conduct calibration checks any time the sensor exceeds the manufacturer's specified maximum operating pressure range or install a new pressure sensor.

(vii) At least monthly, inspect components for integrity, electrical connections for continuity, and mechanical connections for leakage.

(g) *Emission capture systems.* The capture system monitoring system must comply with the applicable requirements in paragraphs (g)(1) and (2) of this section.

(1) For each flow measurement device, you must meet the requirements in paragraphs (a) and (g)(1)(i) through (iv) of this section.

(i) Locate a flow sensor in a position that provides a representative flow measurement in the duct from each capture device in the emission capture system to the add-on control device.

(ii) Reduce swirling flow or abnormal velocity distributions due to upstream and downstream disturbances.

(iii) Conduct a flow sensor calibration check at least semiannually.

(iv) At least monthly, inspect components for integrity, electrical connections for continuity, and mechanical connections for leakage.

(2) For each pressure drop measurement device, you must comply with the requirements in paragraphs (a) and (g)(2)(i) through (vi) of this section.

(i) Locate the pressure sensor(s) in or as close to a position that provides a representative measurement of the

sfrattini on LAPJZKW1R2 with $$_JOB
VerDate Sep<11>2014 09:16 Apr 04, 2023 Jkt 256165 PO 00000 Frm 01022 Fmt 8010 Sfmt 8010 Q:\40\256165.XXX PC31

pressure drop across each opening you are monitoring.

(ii) Minimize or eliminate pulsating pressure, vibration, and internal and external corrosion.

(iii) Check pressure tap pluggage daily.

(iv) Using an inclined manometer with a measurement sensitivity of 0.0002 inch water, check gauge calibration quarterly and transducer calibration monthly.

(v) Conduct calibration checks any time the sensor exceeds the manufacturer's specified maximum operating pressure range or install a new pressure sensor.

(vi) At least monthly, inspect components for integrity, electrical connections for continuity, and mechanical connections for leakage.

OTHER REQUIREMENTS AND INFORMATION

§ 63.4780 Who implements and enforces this subpart?

(a) This subpart can be implemented and enforced by us, the EPA, or a delegated authority such as your State, local, or tribal agency. If the EPA Administrator has delegated authority to your State, local, or tribal agency, then that agency, in addition to the EPA, has the authority to implement and enforce this subpart. You should contact your EPA Regional Office to find out if implementation and enforcement of this subpart is delegated to your State, local, or tribal agency.

(b) In delegating implementation and enforcement authority of this subpart to a State, local, or tribal agency under 40 CFR part 63, subpart E, the authorities contained in paragraph (c) of this section are retained by the EPA Administrator and are not transferred to the State, local, or tribal agency.

(c) The authorities that will not be delegated to State, local, or tribal agencies are listed in paragraphs (c)(1) through (4) of this section:

(1) Approval of alternatives to the work practice standards under § 63.4693.

(2) Approval of major alternatives to test methods under § 63.7(e)(2)(ii) and (f) and as defined in § 63.90.

(3) Approval of major alternatives to monitoring under § 63.8(f) and as defined in § 63.90.

(4) Approval of major changes to recordkeeping and reporting under § 63.10(f) and as defined in § 63.90.

§ 63.4781 What definitions apply to this subpart?

Terms used in this subpart are defined in the CAA, in 40 CFR 63.2, and in this section as follows:

Add-on control means an air pollution control device, such as a thermal oxidizer or carbon adsorber, that reduces pollution in an air stream by destruction or removal before discharge to the atmosphere.

Adhesive means any chemical substance that is applied for the purpose of bonding two surfaces together.

Block average is an average of data points collected over any specified, continuous 180-minute block of time (*e.g.*, a 3-hour block could be noon to 3 p.m., with a subsequent total of eight 3-hour blocks within a 24-hour period).

Capture device means a hood, enclosure, room, floor sweep, or other means of containing or collecting emissions and directing those emissions into an add-on air pollution control device.

Capture efficiency or *capture system efficiency* means the portion (expressed as a percentage) of the pollutants from an emission source that is delivered to an add-on control device.

Capture system means one or more capture devices intended to collect emissions generated by a coating operation in the use of coatings or cleaning materials, both at the point of application and at subsequent points where emissions from the coatings or cleaning materials occur, such as flashoff, drying, or curing. As used in this subpart, multiple capture devices that collect emissions generated by a coating operation are considered a single capture system.

Cleaning material means a solvent used to remove contaminants and other materials, such as dirt, grease, oil, and dried or wet coating (*e.g.*, depainting), from a substrate before or after coating application or from equipment associated with a coating operation, such as spray booths, spray guns, racks, tanks, and hangers. Thus, it includes any cleaning material used on substrates or equipment or both.

sfrattini on LAPJZKW1R2 with $$_JOB
VerDate Sep<11>2014 09:16 Apr 04, 2023 Jkt 256165 PO 00000 Frm 01023 Fmt 8010 Sfmt 8010 Q:\40\256165.XXX PC31

Coating means a material applied to a substrate for decorative, protective, or functional purposes. Such materials include, but are not limited to, paints, sealants, caulks, inks, adhesives, and maskants. Decorative, protective, or functional materials that consist only of protective oils for metal, acids, bases, or any combination of these substances are not considered coatings for the purposes of this subpart.

Coating operation means equipment used to apply cleaning materials to a substrate to prepare it for coating application or to remove dried coating (surface preparation), to apply coating to a substrate (coating application) and to dry or cure the coating after application, or to clean coating operation equipment (equipment cleaning). A single coating operation may include any combination of these types of equipment, but always includes at least the point at which a coating or cleaning material is applied and all subsequent points in the affected source where organic HAP emissions from that coating or cleaning material occur. There may be multiple coating operations in an affected source. Coating application with hand-held nonrefillable aerosol containers, touchup markers, or marking pens is not a coating operation for the purposes of this subpart.

Coating solids means the nonvolatile portion of the coating that makes up the dry film.

Continuous parameter monitoring system (CPMS) means the total equipment that may be required to meet the data acquisition and availability requirements of this subpart used to sample, condition (if applicable), analyze, and provide a record of coating operation, or capture system, or add-on control device parameters.

Controlled coating operation means a coating operation from which some or all of the organic HAP emissions are routed through an emission capture system and add-on control device.

Deviation means any instance in which an affected source subject to this subpart, or an owner or operator of such a source:

(1) Fails to meet any requirement or obligation established by this subpart including, but not limited to any emission limit, or operating limit, or work practice standard;

(2) Fails to meet any term or condition that is adopted to implement an applicable requirement in this subpart and that is included in the operating permit for any affected source required to obtain such a permit; or

(3) On and after September 3, 2019, fails to meet any emission limit, or operating limit, or work practice standard in this subpart during SSM.

Emission limitation means an emission limit, operating limit, or work practice standard.

Enclosure means a structure that surrounds a source of emissions and captures and directs the emissions to an add-on control device.

Exempt compound means a specific compound that is not considered a VOC due to negligible photochemical reactivity. The exempt compounds are listed in 40 CFR 51.100(s).

Finished wood product means any wood building product to which a protective, decorative, or functional layer has been applied. Materials used include, but are not limited to, paints, stains, sealers, topcoats, basecoats, primers, enamels, inks, and adhesives.

Laminated wood product means any wood building product to which a protective, decorative, or functional layer has been bonded with an adhesive. Products that are produced by bonding layers to the substrate as a part of the substrate manufacturing process (prior to pressing) are not considered laminated products under this subpart.

Manufacturer's formulation data means data on a material (such as a coating) that are supplied by the material manufacturer based on knowledge of the ingredients used to manufacture that material, rather than based on testing of the material with the test methods specified in § 63.4741. Manufacturer's formulation data may include, but are not limited to, information on density, organic HAP content, volatile organic matter content, and coating solids content.

Mass fraction of organic HAP means the ratio of the mass of organic HAP to the mass of a material in which it is contained, expressed as grams of organic HAP per gram of material.

sfrattini on LAPJZKW1R2 with $$_JOB
VerDate Sep<11>2014 09:16 Apr 04, 2023 Jkt 256165 PO 00000 Frm 01024 Fmt 8010 Sfmt 8010 Q:\40\256165.XXX PC31

Millwork means lumber that has been remanufactured into a wood building product or component such as door, window, and staircase part(s), or decorative trim.

Month means a calendar month or a pre-specified period of 28 days to 35 days to allow for flexibility in recordkeeping when data are based on a business accounting period.

Organic HAP content means the mass of organic HAP per volume of coating solids for a coating calculated using Equation 2 of §63.4741. The organic HAP content is determined for the coating in the condition it is in when received from its manufacturer or supplier and does not account for any alteration after receipt.

Permanent total enclosure (PTE) means a permanently installed enclosure that meets the criteria of Method 204 of appendix M, 40 CFR part 51, for a PTE and that directs all the exhaust gases from the enclosure to an add-on control device.

Protective oil means an organic material that is applied to metal for the purpose of providing lubrication or protection from corrosion without forming a solid film. This definition of protective oil includes, but is not limited to, lubricating oils, evaporative oils (including those that evaporate completely), and extrusion oils.

Research or laboratory facility means a facility whose primary purpose is for research and development of new processes and products, that is conducted under the close supervision of technically trained personnel, and is not engaged in the manufacture of final or intermediate products for commercial purposes, except in a de minimis manner.

Responsible official means responsible official as defined in 40 CFR 70.2.

Startup, initial means the first time equipment is brought online in a source.

Surface preparation means use of a cleaning material on a portion of or all of a substrate. This includes use of a cleaning material to remove dried coating, which is sometimes called ''depainting.''

Temporary total enclosure means an enclosure constructed for the purpose of measuring the capture efficiency of pollutants emitted from a given source as defined in Method 204 of appendix M, 40 CFR part 51.

Thinner means an organic solvent that is added to a coating after the coating is received from the supplier.

Tileboard means hardboard that meets the specifications for Class I given by the standard ANSI A135.4–2012 (incorporated by reference, see §63.14) as approved by the American National Standards Institute. The standard specifies requirements and test methods for water absorption, thickness swelling, modulus of rupture, tensile strength, surface finish, dimensions, squareness, edge straightness, and moisture content for five classes of hardboard. Tileboard is also known as Class I hardboard or tempered hardboard.

Total volatile hydrocarbon (TVH) means the total amount of nonaqueous volatile organic matter determined according to Methods 204 and 204A through 204F of appendix M to 40 CFR part 51 and substituting the term TVH each place in the methods where the term VOC is used. The TVH includes both VOC and non-VOC.

Uncontrolled coating operation means a coating operation from which none of the organic HAP emissions are routed through an emission capture system and add-on control device.

Volatile organic compound (VOC) means any compound defined as VOC in 40 CFR 51.100(s).

Volume fraction of coating solids means the ratio of the volume of coating solids (also known as volume of nonvolatiles) to the volume of coating; liters of coating solids per liter of coating.

Wastewater means water that is generated in a coating operation and is collected, stored, or treated prior to being discarded or discharged.

Wood building product means any product that contains more than 50 percent by weight wood or wood fiber, excluding the weight of any glass components, and is used in the construction, either interior or exterior, of a residential, commercial, or institutional building.

[68 FR 31760, May 28, 2003, as amended at 84 FR 7704, Mar. 4, 2019]

sfrattini on LAPJZKW1R2 with $$_JOB
VerDate Sep<11>2014 09:16 Apr 04, 2023 Jkt 256165 PO 00000 Frm 01025 Fmt 8010 Sfmt 8010 Q:\40\256165.XXX PC31

TABLE 1 TO SUBPART QQQQ OF PART 63—EMISSION LIMITS FOR NEW OR RECONSTRUCTED AFFECTED SOURCES

You must comply with the emission limits that apply to your affected source in the following table as required by § 63.4690.

If the affected source applies coating to products in the following subcategory. . .	Then, the organic HAP emission limit for the affected source, in grams HAP/liter solids (lb HAP/gal solids)[1] [2] is:
1. Exterior siding and primed doorskins	0 (0.00)
2. Flooring	0 (0.00)
3. Interior wall paneling or tileboard	5 (0.04)
4. Other interior panels	0 (0.00)
5. Doors, windows, and miscellaneous	57 (0.48)

[1] Determined as a rolling 12-month emission rate according to the requirements in § 63.4741, § 63.4751, or § 63.4761, as applicable.
[2] If the affected source applies coatings to products in more than one of the subcategories listed in the table, then you must determine the applicable emission limit according to § 63.4690(c).

TABLE 2 TO SUBPART QQQQ OF PART 63—EMISSION LIMITS FOR EXISTING AFFECTED SOURCES

You must comply with the emission limits that apply to your affected source in the following table as required by § 63.4690.

If the affected source applies coating to products in the following subcategory. . .	Then, the organic HAP emission limit for the affected source, in grams HAP/liter solids (lb HAP/gal solids)[1] [2] is:
1. Exterior siding and primed doorskins	7 (0.06)
2. Flooring	93 (0.78)
3. Interior wall paneling or tileboard	183 (1.53)
4. Other interior panels	20 (0.17)
5. Doors, windows, and miscellaneous	231 (1.93)

[1] Determined as a rolling 12-month emission rate according to the requirements in § 63.4741, § 63.4751, or § 63.4761, as applicable.
[2] If the affected source applies coatings to products in more than one of the subcategories listed in the table, then you must determine the applicable emission limit according to § 63.4690(c).

TABLE 3 TO SUBPART QQQQ OF PART 63—OPERATING LIMITS IF USING THE EMISSION RATE WITH ADD-ON CONTROLS OPTION

If you are required to comply with operating limits by § 63.4692, you must comply with the applicable operating limits in the following table:

For the following device . . .	You must meet the following operating limit . . .	And you must demonstrate continuous compliance with the operating limit by . . .
1. Thermal oxidizer	a. The average combustion temperature in any 3-hour period must not fall below the combustion temperature limit established according to § 63.4767(a).	i. Collecting the combustion temperature data according to § 63.4768(c); ii. Reducing the data to 3-hour block averages; and iii. Maintaining the 3-hour block average combustion temperature at or above the temperature limit.
2. Catalytic oxidizer	a. The average temperature difference measured across the catalyst bed in any 3-hour period must not fall below the limit established according to § 63.4767(b); or	i. Collecting the temperature data according to § 63.4768(c); ii. Reducing the data to 3-hour block averages; and iii. Maintaining the 3-hour block temperature difference across the catalyst bed at or above the temperature limit.
	b. Ensure that the inlet temperature of the catalyst bed in any 3-hour period does not fall below the temperature limit established according to § 63.4767(b)(2) and develop and implement an inspection and maintenance plan according to § 63.4767(b)(3) and (4).	i. Collecting the temperature data according to § 63.4768(c), reducing the data to 3-hour block averages, and maintaining the 3-hour average temperature at or above the temperature limit; and ii. Complying with the inspection and maintenance plan developed according to § 63.4767(b)(3) and (4).

sfrattini on LAPJZKW1R2 with $$_JOB
VerDate Sep<11>2014 09:16 Apr 04, 2023 Jkt 256165 PO 00000 Frm 01026 Fmt 8010 Sfmt 8002 Q:\40\256165.XXX PC31

For the following device . . .	You must meet the following operating limit . . .	And you must demonstrate continuous compliance with the operating limit by . . .
3. Carbon absorber	a. The total regeneration desorbing gas (*e.g.,* steam or nitrogen) mass flow for each carbon bed regeneration cycle must not fall below the total regeneration desorbing gas mass flow limit established according to § 63.4767(c).	i. Measuring the total regeneration desorbing gas (*e.g.,* steam or nitrogen) mass flow for each regeneration cycle according to § 63.4768(d); and ii. Maintaining the total regeneration desorbing gas mass flow at or above the mass flow limit.
	b. The temperature of the carbon bed, after completing each regeneration and any cooling cycle, must not exceed the carbon bed temperature limit established according to § 63.4767(c).	i. Measuring the temperature of the carbon bed, after completing each regeneration and any cooling cycle, according to § 63.4768(d); and ii. Operating and carbon beds such that each carbon bed is not returned to service until completing each regeneration and any cooling cycle until the recorded temperature of the carbon bed is at or below the temperature limit.
4. Condenser	a. The average condenser outlet (product side) gas temperature in any 3-hour period must not exceed the temperature limit established according to § 63.4767(d).	i. Collecting the condenser outlet (product side) gas temperature according to § 63.4768(e); ii. Reducing the data to 3-hour block averages; and iii. Maintaining the 3-hour block average gas temperature at the outlet at or below the temperature limit.
5. Emission capture system that is a PTE according to § 63.4765(a).	a. The direction of the air flow at all times must be into the enclosure; and either.	i. Collecting the direction of the air flow; and either the facial velocity of air through all natural draft openings according to § 63.4768(g)(1) or the pressure drop across the enclosure according to § 63.4768(g)(2); and ii. Maintaining the facial velocity of air flow through all natural draft openings or the pressure drop at or above the facial velocity limit or pressure drop limit, and maintaining the direction of air flow into the enclosure at all times.
	b. The average facial velocity of air through all natural draft openings in the enclosure must be at least 200 feet per minute; or	i. See items 5.a.i and 5.a.ii.
	c. The pressure drop across the enclosure must be at least 0.007 inch H_2O, as established in Method 204 of appendix M to 40 CFR part 51.	i. See items 5.a.i and 5.a.ii.
6. Emission capture system that is not a PTE according to § 63.4765(a).	a. The average gas volumetric flow rate or duct static pressure in each duct between a capture device and add-on control device inlet in any 3-hour period must not fall below the average volumetric flow rate or duct static pressure limit established for that capture device according to § 63.4767(f).	i. Collecting the gas volumetric flow gas or duct static pressure for each capture device according to § 63.4768(g); ii. Reducing the data to 3-hour block averages; and iii. Maintaining the 3-hour block average gas volumetric flow rate or duct static pressure for each capture device at or above the gas volumetric flow rate or duct static pressure limit
7. Concentrators, including zeolite wheels and rotary carbon absorbers.	The average gas temperature of the desorption concentrate stream in any 3-hour period must not fall below the limit established according to § 63.4767(e); and	i. Collecting the temperature data according to § 63.4768(f); ii. Reducing the data to 3-hour block averages; and iii. Maintaining the 3-hour block average temperature at or above the temperature limit.
	b. The average pressure drop of the dilute stream across the concentrator in any 3-hour period must not exceed the limit established according to § 63.4767(e).	i. Collecting the pressure drop data according to § 63.4768(f); and ii. Reducing the pressure drop data to 3-hour block averages; and iii. Maintaining the 3-hour block average pressure drop at or below at the pressure drop limit.

sfrattini on LAPJZKW1R2 with $$_JOB
VerDate Sep<11>2014 09:16 Apr 04, 2023 Jkt 256165 PO 00000 Frm 01027 Fmt 8010 Sfmt 8026 Q:\40\256165.XXX PC31

TABLE 4 TO SUBPART QQQQ OF PART 63—APPLICABILITY OF GENERAL PROVISIONS TO SUBPART QQQQ OF PART 63

You must comply with the applicable General Provisions requirements according to the following table:

Citation	Subject	Applicable to subpart QQQQ	Explanation
§ 63.1(a)(1)–(14)	General Applicability	Yes.	
§ 63.1(b)(1)–(3)	Initial Applicability Determination.	Yes	Applicability to subpart QQQQ is also specified in § 63.4681.
§ 63.1(c)(1)	Applicability After Standard Established.	Yes.	
§ 63.1(c)(2)	Applicability of Permit Program for Area Sources.	No	Area sources are not subject to subpart QQQQ.
§ 63.1(c)(3)	[Reserved]	No.	
§ 63.1(c)(4)–(5)	Extensions and Notifications	Yes.	
§ 63.1(c)(6)	Reclassification	Yes.	
§ 63.1(d)	[Reserved]	No.	
§ 63.1(e)	Applicability of Permit Program Before Relevant Standard is Set.	Yes.	
§ 63.2	Definitions	Yes	Additional definitions are specified in § 63.4781.
§ 63.3(a)–(c)	Units and Abbreviations	Yes.	
§ 63.4(a)(1)–(5)	Prohibited Activities	Yes.	
§ 63.4(b)–(c)	Circumvention/Severability	Yes.	
§ 63.5(a)	Construction/Reconstruction	Yes.	
§ 63.5(b)(1)–(6)	Requirements for Existing, Newly Constructed, and Reconstructed Sources.	Yes.	
§ 63.5(c)	[Reserved]	No.	
§ 63.5(d)	Application for Approval of Construction/Reconstruction.	Yes.	
§ 63.5(e)	Approval of Construction/Reconstruction.	Yes.	
§ 63.5(f)	Approval of Construction/Reconstruction Based on Prior State Review.	Yes.	
§ 63.6(a)	Compliance With Standards and Maintenance Requirements—Applicability.	Yes.	
§ 63.6(b)(1)–(7)	Compliance Dates for New and Reconstructed Sources.	Yes	§ 63.4683 specifies compliance dates.
§ 63.6(c)(1)–(5)	Compliance Dates for Existing Sources.	Yes	§ 63.4683 specifies compliance dates.
§ 63.6(d)	[Reserved]	No.	
§ 63.6(e)(1)(i)	General Duty to Minimize Emissions.	No	See § 63.4700(b) for general duty requirement.
§ 63.6(e)(1)(ii)	Requirement to Correct Malfunctions ASAP.	No.	
§ 63.6(e)(1)(iii)	Operation and Maintenance Requirements Enforceable Independent of Emissions Limitations.	Yes.	
§ 63.6(e)(2)	[Reserved]	No.	
§ 63.6(e)(3)	SSMP	No.	
§ 63.6(f)(1)	Compliance Except During SSM.	No.	
§ 63.6(f)(2)–(3)	Methods for Determining Compliance.	Yes.	
§ 63.6(g)(1)–(3)	Use of an Alternative Standard	Yes.	
§ 63.6(h)	Compliance with Opacity/Visible Emissions Standards.	No	Subpart QQQQ does not establish opacity standards and does not require continuous opacity monitoring systems (COMS).
§ 63.6(i)(1)–(16)	Extension of Compliance	Yes.	
§ 63.6(j)	Presidential Compliance Exemption.	Yes.	
§ 63.7(a)(1)	Performance Test Requirements—Applicability.	Yes	Applies to all affected sources. Additional requirements for performance testing are specified in §§ 63.4751, 63.4752, 63.4764, 63.4765, and 63.4766.

sfrattini on LAPJZKW1R2 with $$_JOB
VerDate Sep<11>2014 09:16 Apr 04, 2023 Jkt 256165 PO 00000 Frm 01028 Fmt 8010 Sfmt 8002 Q:\40\256165.XXX PC31

Citation	Subject	Applicable to subpart QQQQ	Explanation
§ 63.7(a)(2)	Performance Test Requirements—Dates.	Yes	Applies only to performance tests for capture system and control device efficiency at sources using these to comply with the standard. § 63.4760 specifies the schedule for performance test requirements that are earlier than those specified in § 63.7(a)(2).
§ 63.7(a)(3)	Performance Tests Required By the Administrator.	Yes.	
§ 63.7(a)(4)	Notification of Delay in Performance Testing Due to Force Majeure.	Yes.	
§ 63.7(b)–(d)	Performance Test Requirements—Notification, Quality Assurance, Facilities Necessary for Safe Testing, Conditions During Test.	Yes	Applies only to performance tests for capture system and add-on control device efficiency at sources using these to comply with the standard.
§ 63.7(e)(1)	Performance Testing	Yes.	
§ 63.7(f)	Performance Test Requirements—Use of Alternative Test Method.	Yes	Applies to all test methods except those used to determine capture system efficiency.
§ 63.7(g)–(h)	Performance Test Requirements—Data Analysis, Recordkeeping, Reporting, Waiver of Test.	Yes	Applies only to performance tests for capture system and add-on control device efficiency at sources using these to comply with the standard.
§ 63.8(a)(1)–(2)	Monitoring Requirements—Applicability.	Yes	Applies only to monitoring of capture system and add-on control device efficiency at sources using these to comply with the standard. Additional requirements for monitoring are specified in § 63.4768.
§ 63.8(a)(3)	[Reserved]	No.	
§ 63.8(a)(4)	Additional Monitoring Requirements.	No	Subpart QQQQ does not have monitoring requirements for flares.
§ 63.8(b)	Conduct of Monitoring	Yes.	
§ 63.8(c)(1)	Continuous Monitoring System (CMS) Operation and Maintenance.	Yes	Applies only to monitoring of capture system and add-on control device efficiency at sources using these to comply with the standard. Additional requirements for CMS operations and maintenance are specified in § 63.4768.
§ 63.8(c)(1)(i)	General Duty to Minimize Emissions and CMS Operation.	No.	
§ 63.8(c)(1)(ii)	Operation and Maintenance of CMS.	Yes.	
§ 63.8(c)(1)(iii)	Requirement to Develop SSM Plan for CMS.	No.	
§ 63.8(c)(2)–(3)	Monitoring System Installation	Yes.	
§ 63.8(c)(4)	CMSs	No	§ 63.4768 specifies the requirements for the operation of CMS for capture systems and add-on control devices at sources using these to comply.
§ 63.8(c)(5)	COMS	No	Subpart QQQQ does not have opacity for visible emission standards.
§ 63.8(c)(6)	CMS Requirements	Yes	§ 63.4768 specifies the requirements for monitoring systems for capture systems and add-on control devices at sources using these to comply.
§ 63.8(c)(7)	CMS Out-of-Control Periods	Yes.	
§ 63.8(c)(8)	CMS Out-of-Control Periods Reporting.	No	§ 63.4720 requires reporting of CMS out-of-control periods.
§ 63.8(d)–(e)	Quality Control Program and CMS Performance Evaluation.	No	Subpart QQQQ does not require the use of continuous emissions monitoring systems.
§ 63.8(f)(1)–(5)	Use of an Alternative Monitoring Method.	Yes.	
§ 63.8(f)(6)	Alternative to Relative Accuracy Test.	No	Subpart QQQQ does not require the use of continuous emissions monitoring systems.
§ 63.8(g)(1)–(5)	Data Reduction	No	§§ 63.4767 and 63.4768 specify monitoring data reduction.
§ 63.9(a)–(d)	Notification Requirements	Yes.	
§ 63.9(e)	Notification of Performance Test.	Yes	Applies only to capture system and add-on control device performance tests at sources using these to comply with the standard.

sfrattini on LAPJZKW1R2 with $$_JOB
VerDate Sep<11>2014 09:16 Apr 04, 2023 Jkt 256165 PO 00000 Frm 01029 Fmt 8010 Sfmt 8002 Q:\40\256165.XXX PC31

Citation	Subject	Applicable to subpart QQQQ	Explanation
§ 63.9(f)	Notification of Visible Emissions/Opacity Test.	No	Subpart QQQQ does not have opacity or visible emission standards.
§ 63.9(g)(1)–(3)	Additional Notifications When Using CMS.	No	Subpart QQQQ does not require the use of continuous emissions monitoring systems.
§ 63.9(h)	Notification of Compliance Status.	Yes	§ 63.4710 specifies the dates for submitting the Notification of Compliance Status.
§ 63.9(i)	Adjustment of Submittal Deadlines.	Yes.	
§ 63.9(j)	Change in Previous Information.	Yes.	
§ 63.9(k)	Electronic reporting procedures.	Yes	Only as specified in § 63.9(j).
§ 63.10(a)	Recordkeeping/Reporting—Applicability and General Information.	Yes.	
§ 63.10(b)(1)	General Recordkeeping Requirements.	Yes	Additional requirements are specified in §§ 63.4730 and 63.4731.
§ 63.10(b)(2)(i)–(ii)	Recordkeeping of Occurrence and Duration of Startups and Shutdowns.	No.	
§ 63.10(b)(2)(iii)	Recordkeeping Relevant to CMS.	Yes.	
§ 63.10(b)(2)(iv)–(v)	Recordkeeping Relevant to SSM.	No.	
§ 63.10(b)(2)(vi)–(xi)	Recordkeeping for CMS Malfunctions.	Yes.	
§ 63.10(b)(2)(xii)	Records	Yes.	
§ 63.10(b)(2)(xiii)		No	Subpart QQQQ does not require the use of continuous emissions monitoring systems.
§ 63.10(b)(2)(xiv)		Yes.	
§ 63.10(b)(3)	Recordkeeping Requirements for Applicability Determinations.	Yes.	
§ 63.10(c)(1)–(6)	Additional Recordkeeping Requirements for Sources with CMS.	Yes.	
§ 63.10(c)(7)–(8)		No	The same records are required in § 63.4720(a)(7).
§ 63.10(c)(9)–(14)		Yes.	
§ 63.10(c)(15)	Use of SSM Plan	No.	
§ 63.10(d)(1)	General Reporting Requirements.	Yes	Additional requirements are specified in § 63.4720.
§ 63.10(d)(2)	Report of Performance Test Results.	Yes	Additional requirements are specified in § 63.4720(b).
§ 63.10(d)(3)	Reporting Opacity or Visible Emissions Observations.	No	Subpart QQQQ does not require opacity or visible emissions observations.
§ 63.10(d)(4)	Progress Reports for Sources With Compliance Extensions.	Yes.	
§ 63.10(d)(5)	SSM Reports	No	Malfunctions shall be reported based on compliance option under § 63.4720(a)(5–7).
§ 63.10(e)(1)–(2)	Additional CMS Reports	No	Subpart QQQQ does not require the use of continuous emissions monitoring systems.
§ 63.10(e)(3)	Excess Emissions/CMS Performance Reports.	No	§ 63.4720(b) specifies the contents of periodic compliance reports.
§ 63.10(e)(4)	COMS Data Reports	No	Subpart QQQQ does not specify requirements for opacity or COMS.
§ 63.10(f)	Recordkeeping/Reporting Waiver.	Yes.	
§ 63.11	Control Device Requirements/Flares.	No	Subpart QQQQ does not specify use of flares for compliance.
§ 63.12	State Authority and Delegations.	Yes.	
§ 63.13	Addresses	Yes.	
§ 63.14	Incorporation by Reference	Yes	Test Methods ANSI A135.4–2012, ANSI/ASME PTC 19.10–1981, Part 10, ASTM D1475–13, ASTM D2111–10 (Reapproved 2015), ASTM D2369–10 (Reapproved 2015)[e], ASTM D2697–03 (Reapproved 2014), ASTM D4840–99 (2018)[e], ASTM D6093–97 (Reapproved 2016), ASTM D6348–03 (Reapproved 2010) and NCASI Method ISS/FP A105.01 (incorporated by reference, see § 63.14).

sfrattini on LAPJZKW1R2 with $$_JOB
VerDate Sep<11>2014 09:16 Apr 04, 2023 Jkt 256165 PO 00000 Frm 01030 Fmt 8010 Sfmt 8002 Q:\40\256165.XXX PC31

Citation	Subject	Applicable to subpart QQQQ	Explanation
§ 63.15	Availability of Information/Confidentiality.	Yes.	
§ 63.16	Requirements for Performance Track Member Facilities.	Yes.	

[84 FR 7705, Mar. 4, 2019, as amended at 85 FR 73908, Nov. 19, 2020]

Table 5 to Subpart QQQQ of Part 63—Default Organic HAP Mass Fraction for Solvents and Solvent Blends

You may use the mass fraction values in the following table for solvent blends for which you do not have test data or manufacturer's formulation data.

Solvent/solvent blend	CAS. No.	Average organic HAP mass fraction	Typical organic HAP, percent by mass
1. Toluene	108–88–3	1.0	Toluene.
2. Xylene(s)	1330–20–7	1.0	Xylenes, ethylbenzene.
3. Hexane	110–54–3	0.5	n-hexane.
4. n-Hexane	110–54–3	1.0	n-hexane.
5. Ethylbenzene	100–41–4	1.0	Ethylbenzene.
6. Aliphatic 140		0	None.
7. Aromatic 100		0.02	1% xylene, 1% cumene.
8. Aromatic 150		0.09	Naphthalene.
9. Aromatic naphtha	64742–95–6	0.02	1% xylene, 1% cumene.
10. Aromatic solvent	64742–94–5	0.1	Naphthalene.
11. Exempt mineral spirits	8032–32–4	0	None.
12. Ligroines (VM & P)	8032–32–4	0	None.
13. Lactol spirits	64742–89–6	0.15	Toluene.
14. Low aromatic white spirit	64742–82–1	0	None.
15. Mineral spirits	64742–88–7	0.01	Xylenes.
16. Hydrotreated naphtha	64742–48–9	0	None.
17. Hydrotreated light distillate	64742–47–8	0.001	Toluene.
18. Stoddard solvent	8052–41–3	0.01	Xylenes.
19. Super high-flash naphtha	64742–95–6	0.05	Xylenes.
20. Varsol® solvent	8052–49–3	0.01	0.5% xylenes, 0.5% ethylbenzene.
21. VM & P naphtha	64742–89–8	0.06	3% toluene, 3% xylene.
22. Petroleum distillate mixture	68477–31–6	0.08	4% naphthalene, 4% biphenyl.

Table 6 to Subpart QQQQ of Part 63—Default Organic HAP Mass Fraction for Petroleum Solvent Groups [a]

You may use the mass fraction values in the following table for solvent blends for which you do not have test data or manufacturer's formulation data.

Solvent type	Average organic HAP mass fraction	Typical organic HAP, percent by mass
Aliphatic [b]	0.03	1% xylene, 1% toluene, and 1% ethylbenzene.
Aromatic [c]	0.06	4% xylene, 1% toluene, and 1% ethylbenzene.

[a] Use this table only if the solvent blend does not match any of the solvent blends in Table 5 to this subpart and you only know whether the blend is aliphatic or aromatic.

[b] *E.g.,* Mineral Spirits 135, Mineral Spirits 150 EC, Naphtha, Mixed Hydrocarbon, Aliphatic Hydrocarbon, Aliphatic Naphtha, Naphthol Spirits, Petroleum Spirits, Petroleum Oil, Petroleum Naphtha, Solvent Naphtha, Solvent Blend.

[c] *E.g.,* Medium-flash Naphtha, High-flash Naphtha, Aromatic Naphtha, Light Aromatic Naphtha, Light Aromatic Hydrocarbons, Aromatic Hydrocarbons, Light Aromatic Solvent.

sfrattini on LAPJZKW1R2 with $$_JOB
VerDate Sep<11>2014 09:16 Apr 04, 2023 Jkt 256165 PO 00000 Frm 01031 Fmt 8010 Sfmt 8002 Q:\40\256165.XXX PC31

Subpart RRRR—National Emission Standards for Hazardous Air Pollutants: Surface Coating of Metal Furniture

SOURCE: 68 FR 28619, May 23, 2003, unless otherwise noted.

WHAT THIS SUBPART COVERS

§ 63.4880 What is the purpose of this subpart?

This subpart establishes national emission standards for hazardous air pollutants (NESHAP) for metal furniture surface coating facilities. This subpart also establishes requirements to demonstrate initial and continuous compliance with the emission limitations.

§ 63.4881 Am I subject to this subpart?

(a) Except as provided in paragraph (c) of this section, the source category to which this subpart applies is surface coating of metal furniture.

(1) Surface coating is the application of coatings to a substrate using, for example, spray guns or dip tanks.

(2) Metal furniture means furniture or components of furniture constructed either entirely or partially from metal. Metal furniture includes, but is not limited to, components of the following types of products as well as the products themselves: household, office, institutional, laboratory, hospital, public building, restaurant, barber and beauty shop, and dental furniture; office and store fixtures; partitions; shelving; lockers; lamps and lighting fixtures; and wastebaskets.

(b) You are subject to this subpart if you own or operate a new, reconstructed, or existing affected source as defined in § 63.4882, in the source category defined in paragraph (a) of this section, and that is a major source, is located at a major source, or is part of a major source of emissions of hazardous air pollutants (HAP). A major source of HAP emissions is any stationary source or group of stationary sources located within a contiguous area and under common control that emits or has the potential to emit any single HAP at a rate of 9.07 megagrams (Mg) (10 tons) or more per year or any combination of HAP at a rate of 22.68 Mg (25 tons) or more per year.

(c) This subpart does not apply to surface coating that meets any of the criteria of paragraphs (c)(1) through (6) of this section.

(1) Surface coating conducted at an affected source that uses only coatings, thinners, and cleaning materials that contain no organic HAP.

(2) Surface coating of metal components of wood furniture conducted in an operation that is subject to the wood furniture manufacturing NESHAP in subpart JJ of this part.

(3) Surface coating that occurs at research or laboratory facilities or that is part of janitorial, building, and facility maintenance operations.

(4) Surface coating of only small items such as knobs, hinges, or screws that have a wider use beyond metal furniture are not subject to this subpart unless the surface coating occurs at an affected metal furniture source.

(5) Surface coating of metal furniture conducted for the purpose of repairing or maintaining metal furniture used by a major source and not for commerce is not subject to this subpart, unless organic HAP emissions from the surface coating itself are as high as the rates specified in paragraph (b) of this section.

(6) Surface coating of metal furniture performed on-site at installations owned or operated by the Armed Forces of the United States (including the Coast Guard and the National Guard of any State).

§ 63.4882 What parts of my plant does this subpart cover?

(a) This subpart applies to each new, reconstructed, and existing affected source.

(b) The affected source is the collection of all of the items listed in paragraphs (b)(1) through (4) of this section that are used for surface coating of metal furniture:

(1) All coating operations as defined in § 63.4981;

(2) All storage containers and mixing vessels in which coatings, thinners, and cleaning materials are stored or mixed;

(3) All manual and automated equipment and containers and all pumps and piping within the affected source used

sfrattini on LAPJZKW1R2 with $$_JOB
VerDate Sep<11>2014 09:16 Apr 04, 2023 Jkt 256165 PO 00000 Frm 01032 Fmt 8010 Sfmt 8010 Q:\40\256165.XXX PC31

for conveying coatings, thinners, and cleaning materials; and

(4) All storage containers, all pumps and piping, and all manual and automated equipment and containers within the affected source used for conveying waste materials generated by a coating operation.

(c) An affected source is a new affected source if you commenced its construction after April 24, 2002, and the construction is of a completely new metal furniture surface coating facility where previously no metal furniture surface coating facility had existed.

(d) An affected source is reconstructed if you meet the criteria as defined in § 63.2.

(e) An affected source is existing if it is not new or reconstructed.

§ 63.4883 When do I have to comply with this subpart?

The date by which you must comply with this subpart is called the compliance date. The compliance date for each type of affected source is specified in paragraphs (a) through (c) of this section. The compliance date begins the initial compliance period during which you conduct the initial compliance demonstration described in §§ 63.4940, 63.4950, and 63.4960.

(a) For a new or reconstructed affected source, the compliance date is the applicable date in paragraph (a)(1) or (2) of this section:

(1) If the initial startup of your new or reconstructed affected source is before May 23, 2003, the compliance date is May 23, 2003.

(2) If the initial startup of your new or reconstructed affected source occurs after May 23, 2003, the compliance date is the date of initial startup of your affected source.

(b) For an existing affected source, the compliance date is the date 3 years after May 23, 2003.

(c) For an area source that increases its emissions or its potential to emit such that it becomes a major source of HAP emissions, the compliance date is specified in paragraphs (c)(1) and (2) of this section.

(1) For any portion of the source that becomes a new or reconstructed affected source subject to this subpart, the compliance date is the date of initial startup of the affected source or May 23, 2003, whichever is later.

(2) For any portion of the source that becomes an existing affected source subject to this subpart, the compliance date is the date 1 year after the area source becomes a major source or 3 years after May 23, 2003, whichever is later.

(d) You must meet the notification requirements in § 63.4910 according to the dates specified in that section and in subpart A of this part. Some of the notifications must be submitted before the compliance dates described in paragraphs (a) through (c) of this section.

EMISSION LIMITATIONS

§ 63.4890 What emission limits must I meet?

(a) For a new or reconstructed affected source, you must emit no organic HAP during each compliance period, determined according to the procedures in § 63.4941.

(b) *Alternative emission limit.* You may request approval from the Administrator to use an alternative new source emission limit for specific metal furniture components or type of components for which you believe the emission limit in paragraph (a) of this section cannot be achieved.

(1) Any request to use an alternative emission limit under paragraph (b) of this section must contain specific information demonstrating why no organic HAP-free coating technology can be used on the metal furniture components. The request must be based on objective criteria related to the performance or appearance requirements of the finished coating, which may include but is not limited to the criteria listed in paragraphs (b)(1)(i) through (viii) of this section.

(i) Low dried film thickness requirements (*e.g.*, less than 0.0254 millimeters (0.001 inch)).

(ii) Flexibility requirements for parts subject to repeated bending.

(iii) Chemical resistance to withstand chemical exposure in environments such as laboratories.

(iv) Resistance to the effects of exposure to ultraviolet light.

(v) Adhesion characteristics related to the condition of the substrate.

(vi) High gloss requirements.

sfrattini on LAPJZKW1R2 with $$_JOB
VerDate Sep<11>2014 09:16 Apr 04, 2023 Jkt 256165 PO 00000 Frm 01033 Fmt 8010 Sfmt 8010 Q:\40\256165.XXX PC31

(vii) Custom colors such as matching the color of a corporate logo.

(viii) Non-uniform surface finishes such as an antique appearance that requires visible cracking of the dried film.

(2) If the request to use an alternative emission limit under paragraph (b) of this section is approved, the new source must meet an emission limit of 0.094 kilogram (kg) organic HAP per liter (kg/liter) (0.78 pounds per gallon (lb/gal)) coating solids used for only those components subject to the approval. All other metal furniture surface coating operations at the new source must meet the emission limit specified in paragraph (a) of this section. Until approval to use the alternative emission limit has been granted by the Administrator under this paragraph (b)(2), you must meet the emission limit specified in paragraph (a) of this section and all other applicable requirements in this subpart.

(c) For an existing affected source, you must limit organic HAP emissions to the atmosphere to no more than 0.10 kg organic HAP per liter (0.83 lb/gal) of coating solids used during each compliance period, determined according to the procedures in § 63.4941, § 63.4951, or § 63.4961.

§ 63.4891 What are my options for demonstrating compliance with the emission limits?

You must include all coatings, thinners, and cleaning materials used in the affected source when determining whether the organic HAP emission rate is equal to or less than the applicable emission limit in § 63.4890. To make this determination, you must use at least one of the three compliance options listed in paragraphs (a) through (c) of this section. You may apply any of the compliance options to an individual coating operation or to multiple coating operations as a group or to the entire affected source. You may use different compliance options for different coating operations or at different times on the same coating operation. However, you may not use different compliance options at the same time on the same coating operation. If you switch between compliance options for any coating operation or group of coating operations, you must document this switch as required by § 63.4930(c), and you must report it in the next semiannual (6-month period) compliance report required in § 63.4920.

(a) *Compliant material option.* Demonstrate that the organic HAP content of each coating used in the coating operation or group of coating operations is less than or equal to the applicable emission rate limit in § 63.4890 and that each thinner and each cleaning material used contains no organic HAP. You must meet all the requirements of §§ 63.4940, 63.4941, and 63.4942 to demonstrate compliance with the emission limit using this option.

(b) *Emission rate without add-on controls option.* Demonstrate that, based on the coatings, thinners, and cleaning materials used in the coating operation or group of coating operations, the organic HAP emission rate for the coating operation or group of coating operations is less than or equal to the applicable emission rate limit in § 63.4890, calculated as a monthly emission rate. You must meet all the requirements of §§ 63.4950, 63.4951, and 63.4952 to demonstrate compliance with the emission rate limit using this option.

(c) *Emission rate with add-on controls option.* Demonstrate that, based on the coatings, thinners, and cleaning materials used in the coating operation or group of coating operations, and the emission reductions achieved by emission capture and add-on control systems, the organic HAP emission rate is less than or equal to the applicable emission rate limit in § 63.4890, calculated as a monthly emission rate. If you use this compliance option, you must also demonstrate that all capture systems and add-on control devices for the coating operation or group of coating operations meet the operating limits required in § 63.4892, except for solvent recovery systems for which you conduct liquid-liquid material balances according to § 63.4961(j); and that you meet the work practice standards required in § 63.4893. You must meet all the requirements of §§ 63.4960 through 63.4967 to demonstrate compliance with the emission limits, operating limits, and work practice standards using this option.

sfrattini on LAPJZKW1R2 with $$_JOB
VerDate Sep<11>2014 09:16 Apr 04, 2023 Jkt 256165 PO 00000 Frm 01034 Fmt 8010 Sfmt 8010 Q:\40\256165.XXX PC31

(d) If you choose to use the emission rate with add-on controls compliance option in paragraph (c) of this section and operate the coating operation, its emission capture system, or its add-on control device at multiple sets of representative operating conditions that result in different capture system or add-on control device efficiencies during a compliance period, you must follow one of the procedures in paragraph (d)(1) or (2) of this section.

(1) Determine the operating conditions that result in the lowest emission capture system and add-on control device efficiencies through performance testing conducted according to §§63.4963, 63.4964, and 63.4965. Use these emission capture system and add-on control device efficiencies for all representative operating conditions during the compliance period.

(2) Develop a compliance calculation procedure for determining the organic HAP emission rate for the compliance period that takes into account all of the representative operating conditions the source was operated under during the compliance period and submit the procedure to the Administrator for approval. Until you receive approval from the Administrator, you must determine compliance according to paragraph (c) of this section.

§63.4892 What operating limits must I meet?

(a) For any coating operation or group of coating operations for which you use the compliant material option or the emission rate without add-on controls option to demonstrate compliance, you are not required to meet any operating limits.

(b) For any coating operation or group of coating operations for which you use the emission rate with add-on controls option to demonstrate compliance, except those for which you use a solvent recovery system and conduct a liquid-liquid material balance according to §63.4961(j), you must meet the operating limits specified in Table 1 to this subpart. These operating limits apply to the emission capture and control systems on the coating operation or group of coating operations for which you use emission capture and add-on controls to demonstrate compliance. You must establish the operating limits during the performance test according to the requirements in §63.4966. You must meet the operating limits at all times after you establish them.

(c) If you use an add-on control device other than those listed in Table 1 to this subpart, or wish to monitor an alternative parameter and comply with a different operating limit, you must apply to the Administrator for approval of alternative monitoring under §63.8(f).

§63.4893 What work practice standards must I meet?

(a) For any coating operation or group of coating operations for which you use the compliant material option or the emission rate without add-on controls option to demonstrate compliance, you are not required to meet any work practice standards.

(b) For any coating operation or group of coating operations for which you use the emission rate with add-on controls option to demonstrate compliance, you must develop and implement a work practice plan to minimize organic HAP emissions from the storage, mixing, and conveying of coatings, thinners, and cleaning materials used in, and waste materials generated by, the coating operation or group of coating operations for which you use this option; or you must meet an alternative standard as provided in paragraph (c) of this section. The plan must specify practices and procedures to ensure that, at a minimum, the elements specified in paragraphs (b)(1) through (5) of this section are implemented.

(1) All organic-HAP-containing coatings, thinners, cleaning materials, and waste materials must be stored in closed containers. You must ensure that these containers are kept closed at all times except when depositing or removing these materials from the container.

(2) Spills of organic-HAP-containing coatings, thinners, cleaning materials, and waste materials must be minimized.

(3) Organic-HAP-containing coatings, thinners, cleaning materials, and waste materials must be conveyed from one location to another in closed containers or pipes.

sfrattini on LAPJZKW1R2 with $$_JOB
VerDate Sep<11>2014 09:16 Apr 04, 2023 Jkt 256165 PO 00000 Frm 01035 Fmt 8010 Sfmt 8010 Q:\40\256165.XXX PC31

(4) Mixing vessels which contain organic-HAP-containing coatings and other materials must be closed except when adding to, removing, or mixing the contents.

(5) Emissions of organic HAP must be minimized during cleaning of storage, mixing, and conveying equipment.

(c) As provided in § 63.6(g), the Administrator may choose to grant you permission to use an alternative to the work practice standards in this section.

GENERAL COMPLIANCE REQUIREMENTS

§ 63.4900 What are my general requirements for complying with this subpart?

(a) The affected source must be in compliance at all times with the applicable emission limitations specified in §§ 63.4890, 63.4892, and 63.4893.

(b) Before September 12, 2019, you must always operate and maintain your affected source, including all air pollution control and monitoring equipment you use for purposes of complying with this subpart, according to the provisions in § 63.6(e)(1)(i). On and after September 12, 2019, at all times, the owner or operator must operate and maintain any affected source, including associated air pollution control equipment and monitoring equipment, in a manner consistent with safety and good air pollution control practices for minimizing emissions. The general duty to minimize emissions does not require the owner or operator to make any further efforts to reduce emissions if levels required by the applicable standard have been achieved. Determination of whether a source is operating in compliance with operation and maintenance requirements will be based on information available to the Administrator that may include, but is not limited to, monitoring results, review of operation and maintenance procedures, review of operation and maintenance records, and inspection of the affected source.

(c) Before September 12, 2019, if your affected source uses an emission capture system and add-on control device to comply with the emission limitations in § 63.4890, you must develop a written startup, shutdown, and malfunction plan (SSMP) according to the provisions in § 63.6(e)(3). The SSMP must address the startup, shutdown, and corrective actions in the event of a malfunction of the emission capture system or the add-on control device. The SSMP must also address any coating operation equipment that may cause increased emissions or that would affect capture efficiency if the process equipment malfunctions, such as conveyors that move parts among enclosures. A startup, shutdown, and malfunction plan is not required on and after September 12, 2019.

[84 FR 9635, Mar. 15, 2019]

§ 63.4901 What parts of the General Provisions apply to me?

Table 2 to this subpart shows which parts of the General Provisions in §§ 63.1 through 63.15 apply to you.

NOTIFICATIONS, REPORTS, AND RECORDS

§ 63.4910 What notifications must I submit?

(a) *General.* You must submit the notifications in §§ 63.7(b) and (c), 63.8(f)(4), and 63.9(b) through (e), (h), and (j) that apply to you by the dates specified in those sections, except as provided in paragraphs (b) and (c) of this section.

(b) *Initial Notification.* You must submit the Initial Notification required by § 63.9(b) for a new or reconstructed affected source no later than 120 days after initial startup, 120 days after May 23, 2003, or no later than 120 days after the source becomes subject to this subpart, whichever is later. For an existing affected source, you must submit the Initial Notification no later than 1 year after May 23, 2003, or no later than 120 days after the source becomes subject to this subpart, whichever is later.

(c) *Notification of Compliance Status.* You must submit the Notification of Compliance Status required by § 63.9(h) no later than 30 calendar days following the end of the initial compliance period described in § 63.4940, § 63.4950, or § 63.4960 that applies to your affected source. The Notification of Compliance Status must contain the information specified in paragraphs (c)(1) through (9) of this section and the applicable information specified in § 63.9(h).

(1) Company name and address.

sfrattini on LAPJZKW1R2 with $$_JOB
VerDate Sep<11>2014 09:16 Apr 04, 2023 Jkt 256165 PO 00000 Frm 01036 Fmt 8010 Sfmt 8010 Q:\40\256165.XXX PC31

(2) Statement by a responsible official with that official's name, title, and signature, certifying the truth, accuracy, and completeness of the report. Such certifications must also comply with the requirements of 40 CFR 70.5(d) or 40 CFR 71.5(d).

(3) Date of the report and beginning and ending dates of the reporting period. The reporting period is the initial compliance period described in §63.4940, §63.4950, or §63.4960 that applies to your affected source.

(4) Identification of the compliance option or options specified in §63.4891 that you used on each coating operation in the affected source during the initial compliance period and that you will use for demonstrating continuous compliance.

(5) Statement of whether or not the affected source achieved the emission limitations for the initial compliance period.

(6) If you had a deviation, include the information in paragraphs (c)(6)(i) and (ii) of this section.

(i) A description and statement of the cause of the deviation.

(ii) If you failed to meet the applicable emission limit in §63.4890, include all the calculations you used to determine compliance. You do not need to submit information provided by material suppliers or manufacturers or test reports.

(7) For each of the data items listed in paragraphs (c)(7)(i) through (iv) of this section that is required by the compliance option(s) you used to demonstrate compliance with the emission limit, include an example of how you determined the value, including calculations and supporting data. Supporting data can include a copy of the information provided by the supplier or manufacturer of the example coating or material or a summary of the results of testing conducted according to §63.4941(a), (b), or (c). You do not need to submit copies of any test reports.

(i) Mass fraction of organic HAP for one coating, for one thinner, and for one cleaning material.

(ii) Volume fraction of coating solids for one coating.

(iii) Density for one coating, one thinner, and one cleaning material, except that if you use the compliant material option, only the example coating density is required.

(iv) The amount of waste materials and the mass of organic HAP contained in the waste materials for which you are claiming an allowance in Equation 1 of §63.4951.

(8) The calculation of the organic HAP emission rate for the compliance option(s) you used, as specified in paragraphs (c)(8)(i) through (iii) of this section.

(i) For the compliant materials option, provide an example calculation of the organic HAP content for one coating, using Equation 2 of §63.4941.

(ii) For the emission rate without add-on controls option, provide the information specified in paragraphs (c)(8)(ii)(A) through (C) of this section.

(A) The calculation of the total mass of organic HAP emissions during the initial compliance period, using Equation 1 of §63.4951.

(B) The calculation of the total volume of coating solids used during the initial compliance period, using Equation 2 of §63.4951.

(C) The calculation of the organic HAP emission rate for the initial compliance period, using Equation 3 of §63.4951.

(iii) For the emission rate with add-on controls option, provide the information specified in paragraphs (c)(8)(iii)(A) through (D) of this section.

(A) The calculation of the total mass of organic HAP emissions for the coatings, thinners, and cleaning materials used during the initial compliance period, using Equation 1 of §63.4951.

(B) The calculation of the total volume of coating solids used during the initial compliance period, using Equation 2 of §63.4951.

(C) The calculation of the mass of organic HAP emission reduction during the initial compliance period by emission capture systems and add-on control devices, using Equation 1 of §63.4961, and the calculation of the mass of organic HAP emission reduction for the coating operations controlled by solvent recovery systems during each compliance period, using Equation 3 of §63.4961 as applicable.

sfrattini on LAPJZKW1R2 with $$_JOB
VerDate Sep<11>2014 09:16 Apr 04, 2023 Jkt 256165 PO 00000 Frm 01037 Fmt 8010 Sfmt 8010 Q:\40\256165.XXX PC31

(D) The calculation of the organic HAP emission rate for the initial compliance period, using Equation 4 of § 63.4961.

(9) For the emission rate with add-on controls option, you must include the information specified in paragraphs (c)(9)(i) through (v) of this section. However, the requirements in paragraphs (c)(9)(i) through (iii) of this section do not apply to solvent recovery systems for which you conduct liquid-liquid material balances according to § 63.4961(j).

(i) For each emission capture system, a summary of the data and copies of the calculations supporting the determination that the emission capture system is a permanent total enclosure (PTE) or a measurement of the emission capture system efficiency. Include a description of the protocol followed for measuring capture efficiency, summaries of any capture efficiency tests conducted, and any calculations supporting the capture efficiency determination. If you use the data quality objective (DQO) or lower confidence limit (LCL) approach, you must also include the statistical calculations to show you meet the DQO or LCL criteria in appendix A to subpart KK of this part. You do not need to submit complete test reports.

(ii) A summary of the results of each add-on control device performance test. You do not need to submit complete test reports.

(iii) A list of each emission capture system's and add-on control device's operating limits and a summary of the data used to calculate those limits.

(iv) A statement of whether or not you developed and implemented the work practice plan required by § 63.4893.

(v) Before September 12, 2019, a statement of whether or not you developed and implemented the startup, shutdown, and malfunction plan required by § 63.4900. This statement is not required on and after September 12, 2019.

[68 FR 28619, May 23, 2003, as amended at 84 FR 9635, Mar. 15, 2019; 85 FR 73908, Nov. 19, 2020]

§ 63.4920 What reports must I submit?

(a) *Semiannual compliance reports.* You must submit semiannual compliance reports for each affected source according to the requirements of paragraphs (a)(1) through (7) of this section. The semiannual compliance reporting requirements may be satisfied by reports required under other parts of the Clean Air Act (CAA), such as those detailed in paragraph (a)(2) of this section.

(1) *Dates.* Unless the Administrator has approved a different schedule for submission of reports under § 63.10(a), you must prepare and submit each semiannual compliance report according to the dates specified in paragraphs (a)(1)(i) through (iv) of this section.

(i) The first semiannual compliance report must cover the first semiannual reporting period which begins the day after the end of the initial compliance period described in § 63.4940, § 63.4950, or § 63.4960 that applies to your affected source and ends on June 30 or December 31, whichever occurs first following the end of the initial compliance period.

(ii) Each subsequent semiannual compliance report must cover the subsequent semiannual reporting period from January 1 through June 30 or the semiannual reporting period from July 1 through December 31.

(iii) Each semiannual compliance report must be postmarked or delivered no later than July 31 or January 31, whichever date is the first date following the end of the semiannual reporting period.

(iv) For each affected source that is subject to permitting regulations pursuant to 40 CFR part 70 or 40 CFR part 71, and if the permitting authority has established dates for submitting 6-month monitoring reports pursuant to 40 CFR 70.6(a)(3)(iii)(A) or 40 CFR 71.6(a)(3)(iii)(A), you may submit the first and subsequent semiannual compliance reports according to the dates the permitting authority has established for the 40 CFR part 70 or 40 CFR part 71 6-month monitoring reports instead of according to the dates specified in paragraph (a)(1)(iii) of this section. However, under no circumstances shall the semiannual compliance report be submitted more than 30 days after the end of the semiannual reporting period established in paragraphs (a)(1)(i) and (ii) of this section.

(2) *Inclusion with title V report.* Each affected source that has obtained a

sfrattini on LAPJZKW1R2 with $$_JOB
VerDate Sep<11>2014 09:16 Apr 04, 2023 Jkt 256165 PO 00000 Frm 01038 Fmt 8010 Sfmt 8010 Q:\40\256165.XXX PC31

title V operating permit pursuant to 40 CFR part 70 or 40 CFR part 71 must report all deviations as defined in this subpart in the 6-month monitoring report required by 40 CFR 70.6(a)(3)(iii)(A) or 40 CFR 71.6(a)(3)(iii)(A). If an affected source submits a semiannual compliance report pursuant to this section along with, or as part of, the 6-month monitoring report required by 40 CFR 70.6(a)(3)(iii)(A) or 40 CFR 71.6(a)(3)(iii)(A), and the semiannual compliance report includes all information required by the part 70 or part 71 6-month monitoring report concerning deviations from the requirements of this subpart as defined in §63.4981, the submission of the semiannual compliance report shall be deemed to satisfy any obligation to report the same deviation information in the part 70 or part 71 6-month monitoring report. However, in such situations, the 6-month monitoring report must cross-reference the semiannual compliance report, and submission of a semiannual compliance report shall not otherwise affect any obligation the affected source may have to report deviations from permit requirements to the permitting authority.

(3) *General requirements*. The semiannual compliance report must contain the information specified in paragraphs (a)(3)(i) through (v) of this section, and the information specified in paragraphs (a)(4) through (7) of this section that is applicable to your affected source.

(i) Company name and address.

(ii) Statement by a responsible official with that official's name, title, and signature, certifying the truth, accuracy, and completeness of the report. Such certifications must also comply with the requirements of 40 CFR 70.5(d) or 40 CFR 71.5(d).

(iii) Date of report and beginning and ending dates of the reporting period. The reporting period is the 6-month period ending on June 30 or December 31.

(iv) Identification of the compliance option or options specified in §63.4891 that you used on each coating operation during the reporting period. If you switched between compliance options during the reporting period, you must report the beginning and ending dates you used each option.

(v) If you used the emission rate without add-on controls or the emission rate with add-on controls compliance option (§63.4891(b) or (c)), the calculation results for each organic HAP emission rate for each compliance period ending in the 6-month reporting period.

(4) *No deviations*. If there were no deviations from the emission limits, operating limits, and work practice standards in §§63.4890, 63.4892, and 63.4893, respectively, that apply to you, the semiannual compliance report must include an affirmative statement that there were no deviations from the emission limits, operating limits, or work practice standards in §§63.4890, 63.4892, and 63.4893 during the reporting period. If there were no deviations from these emission limitations, the semiannual compliance report must include the affirmative statement that is described in either §63.4942(c), §63.4952(c), or §63.4962(f), as applicable. If you used the emission rate with add-on controls option and there were no periods during which the continuous parameter monitoring systems (CPMS) were out-of-control as specified in §63.8(c)(7), the semiannual compliance report must include a statement that there were no periods during which the CPMS were out-of-control during the reporting period as specified in §63.8(c)(7).

(5) *Deviations: Compliant material option*. If you used the compliant material option, and there was a deviation from the applicable emission limit in §63.4890, the semiannual compliance report must contain the information in paragraph (a)(5)(i) or (ii) of this section, as applicable.

(i) Before September 12, 2019, the information in paragraphs (a)(5)(i)(A) through (D) of this section.

(A) Identification of each coating used that deviated from the emission limit, and of each thinner and cleaning material used that contained organic HAP, and the dates and time periods each was used.

(B) The calculation of the organic HAP content for each coating identified in paragraph (a)(5)(i) of this section, using Equation 2 of §63.4941. You do not need to submit background data supporting this calculation, for example, information provided by materials

sfrattini on LAPJZKW1R2 with $$_JOB
VerDate Sep<11>2014 09:16 Apr 04, 2023 Jkt 256165 PO 00000 Frm 01039 Fmt 8010 Sfmt 8010 Q:\40\256165.XXX PC31

suppliers or manufacturers, or test reports.

(C) The determination of mass fraction of organic HAP for each coating, thinner, and cleaning material identified in paragraph (a)(5)(i) of this section. You do not need to submit background data supporting this calculation, for example, information provided by materials suppliers or manufacturers, or test reports.

(D) A statement of the cause of each deviation.

(ii) On and after September 12, 2019, if there was a deviation from the applicable emission limit in § 63.4890, the semiannual compliance report must contain the information in paragraphs (a)(5)(ii)(A) through (E) of this section.

(A) Identification of each coating used that deviated from the emission limit, and of each thinner and cleaning material used that contained organic HAP, and the date, time, and duration each was used.

(B) The calculation of the organic HAP content for each coating identified in paragraph (a)(5)(ii)(A) of this section, using Equation 2 of § 63.4941. You do not need to submit background data supporting this calculation, for example, information provided by materials suppliers or manufacturers, or test reports.

(C) The determination of mass fraction of organic HAP for each coating, thinner, and cleaning material identified in paragraph (a)(5)(ii)(A) of this section. You do not need to submit background data supporting this calculation, for example, information provided by materials suppliers or manufacturers, or test reports.

(D) A statement of the cause of each deviation (including unknown cause, if applicable).

(E) The number of deviations and, for each deviation, a list of the affected source or equipment, an estimate of the quantity of each regulated pollutant emitted over any emission limit in § 63.4890, and a description of the method used to estimate the emissions.

(6) *Deviations: Emission rate without add-on controls option.* If you used the emission rate without add-on controls option, and there was a deviation from any applicable emission limit in § 63.4890, the semiannual compliance report must contain the information in paragraph (a)(6)(i) or (ii) of this section, as applicable. You do not need to submit background data supporting these calculations, for example, information provided by materials suppliers or manufacturers, or test reports.

(i) Before September 12, 2019, the information in paragraphs (a)(6)(i)(A) through (E) of this section.

(A) The beginning and ending dates of each compliance period during which the organic HAP emission rate exceeded the applicable emission limit in § 63.4890.

(B) The calculation of the total mass of organic HAP emissions for each month, using Equations 1 of § 63.4951.

(C) The calculation of the total volume of coating solids used each month, using Equation 2 of § 63.4951.

(D) The calculation of the organic HAP emission rate for each month, using Equation 3 of § 63.4951.

(E) A statement of the cause of each deviation.

(ii) On and after September 12, 2019, if there was a deviation from the applicable emission limit in § 63.4890, the semiannual compliance report must contain the information in paragraphs (a)(6)(ii)(A) through (F) of this section.

(A) The beginning and ending dates of each compliance period during which the organic HAP emission rate exceeded the applicable emission limit in § 63.4890.

(B) The calculation of the total mass of organic HAP emissions for each month, using Equation 1 of § 63.4951.

(C) The calculation of the total volume of coating solids used each month, using Equation 2 of § 63.4951.

(D) The calculation of the organic HAP emission rate for each month, using Equation 3 of § 63.4951.

(E) A statement of the cause of each deviation (including unknown cause, if applicable).

(F) The number of deviations, a list of the affected source or equipment, an estimate of the quantity of each regulated pollutant emitted over any emission limit in § 63.4890, and a description of the method used to estimate the emissions.

(7) *Deviations: Emission rate with add-on controls option.* If you used the emission rate with add-on controls option,

sfrattini on LAPJZKW1R2 with $$_JOB
VerDate Sep<11>2014 09:16 Apr 04, 2023 Jkt 256165 PO 00000 Frm 01040 Fmt 8010 Sfmt 8010 Q:\40\256165.XXX PC31

and there was a deviation from any applicable emission limitation (including any periods when emissions bypassed the add-on control device and were diverted to the atmosphere), the semiannual compliance report must contain the information in paragraph (a)(7)(i) or (ii) of this section, as applicable.

(i) Before September 12, 2019, the information in paragraphs (a)(7)(i)(A) through (Q) of this section. This includes periods of startup, shutdown, and malfunction during which deviations occurred. You do not need to submit background data supporting these calculations, for example, information provided by materials suppliers or manufacturers, or test reports.

(A) The beginning and ending dates of each compliance period during which the organic HAP emission rate exceeded the applicable emission limit in §63.4890.

(B) The calculation of the total mass of organic HAP emissions for the coatings, thinners, and cleaning materials used during each month, using Equation 1 of §63.4951 and, if applicable, the calculation used to determine the total mass of organic HAP in waste materials sent or designated for shipment to a hazardous waste treatment, storage, and disposal facility (TSDF) for treatment or disposal during each compliance period, according to §63.4951(e)(4).

(C) The calculation of the total volume of coating solids used, using Equation 2 of §63.4951.

(D) The calculation of the mass of organic HAP emission reduction each month by emission capture systems and add-on control devices, using Equation 1 of §63.4961, and Equation 3 of §63.4961 for the calculation of the mass of organic HAP emission reduction for the coating operation controlled by solvent recovery systems each compliance period, as applicable.

(E) The calculation of the organic HAP emission rate for each compliance period, using Equation 4 of §63.4961.

(F) The date and time that each malfunction started and stopped.

(G) A brief description of the CPMS.

(H) The date of the latest CPMS certification or audit.

(I) The date and time that each CPMS was inoperative, except for zero (low-level) and high-level checks.

(J) The date, time, and duration that each CPMS was out-of-control, including the information in §63.8(c)(8).

(K) The date and time period of each deviation from an operating limit in Table 1 to this subpart; date and time period of any bypass of the add-on control device; and whether each deviation occurred during a period of startup, shutdown, or malfunction or during another period.

(L) A summary of the total duration of each deviation from an operating limit in Table 1 to this subpart and each bypass of the add-on control device during the semiannual reporting period and the total duration as a percent of the total affected source operating time during that semiannual reporting period.

(M) A breakdown of the total duration of the deviations from the operating limits in Table 1 to this subpart and bypasses of the add-on control device during the semiannual reporting period into those that were due to startup, shutdown, control equipment problems, process problems, other known causes, and other unknown causes.

(N) A summary of the total duration of CPMS downtime during the semiannual reporting period and the total duration of CPMS downtime as a percent of the total affected source operating time during that semiannual reporting period.

(O) A description of any changes in the CPMS, coating operation, emission capture system, or add-on control device since the last semiannual reporting period.

(P) For each deviation from the work practice standards, a description of the deviation; the date and time period of the deviation; and the actions you took to correct the deviation.

(Q) A statement of the cause of each deviation.

(ii) On and after September 12, 2019, the information in paragraphs (a)(7)(ii)(A) through (O), (Q), and (R) of this section if there was a deviation from the applicable emission limit in §63.4890 or the applicable operating limit(s) in Table 1 to this subpart (including any periods when emissions bypassed the add-on control device and were diverted to the atmosphere) and

sfrattini on LAPJZKW1R2 with $$_JOB
VerDate Sep<11>2014 09:16 Apr 04, 2023 Jkt 256165 PO 00000 Frm 01041 Fmt 8010 Sfmt 8010 Q:\40\256165.XXX PC31

the information in paragraph (a)(7)(ii)(P) of this section if there was a deviation from the work practice standards in § 63.4893(b).

(A) The beginning and ending dates of each compliance period during which the organic HAP emission rate exceeded the applicable emission limit in § 63.4890.

(B) The calculation of the total mass of organic HAP emissions for the coatings, thinners, and cleaning materials used during each month, using Equation 1 of § 63.4951 and, if applicable, the calculation used to determine the total mass of organic HAP in waste materials sent or designated for shipment to a hazardous waste treatment, storage, and disposal facility (TSDF) for treatment or disposal during each compliance period, according to § 63.4951(e)(4).

(C) The calculation of the total volume of coating solids used, using Equation 2 of § 63.4951.

(D) The calculation of the mass of organic HAP emission reduction each month by emission capture systems and add-on control devices, using Equation 1 of § 63.4961, and Equation 3 of § 63.4961 for the calculation of the mass of organic HAP emission reduction for the coating operation controlled by solvent recovery systems each compliance period, as applicable.

(E) The calculation of the organic HAP emission rate for each compliance period, using Equation 4 of § 63.4961.

(F) The date and time that each malfunction of the capture system or add-on control devices started and stopped.

(G) A brief description of the CPMS.

(H) The date of the latest CPMS certification or audit.

(I) For each instance that the CPMS was inoperative, except for zero (low-level) and high-level checks, the date, time, and duration that the CPMS was inoperative; the cause (including unknown cause) for the CPMS being inoperative, and descriptions of corrective actions taken.

(J) For each instance that the CPMS was out-of-control, as specified in § 63.8(c)(7), the date, time, and duration that the CPMS was out-of-control; the cause (including unknown cause) for the CPMS being out-of-control; and descriptions of corrective actions taken.

(K) The date, time, and duration of each deviation from an operating limit in Table 1 to this subpart; and the date, time, and duration of any bypass of the add-on control device.

(L) A summary of the total duration of each deviation from an operating limit in Table 1 to this subpart and each bypass of the add-on control device during the semiannual reporting period and the total duration as a percent of the total affected source operating time during that semiannual reporting period.

(M) A breakdown of the total duration of the deviations from the operating limits in Table 1 to this subpart and bypasses of the add-on control device during the semiannual reporting period into those that were due to control equipment problems, process problems, other known causes, and other unknown causes.

(N) A summary of the total duration of CPMS downtime during the semiannual reporting period and the total duration of CPMS downtime as a percent of the total affected source operating time during that semiannual reporting period.

(O) A description of any changes in the CPMS, coating operation, emission capture system, or add-on control device since the last semiannual reporting period.

(P) For deviations from the work practice standards in § 63.4893(b), the number of deviations, and, for each deviation: A description of the deviation; the date, time, and duration of the deviation; and the actions taken to minimize emissions in accordance with § 63.4900(b). The description of the deviation must include a list of the affected sources or equipment for which a deviation occurred and the cause of the deviation (including unknown cause, if applicable).

(Q) For deviations from an emission limit in § 63.4890 or operating limit in Table 1 to this subpart, a statement of the cause of each deviation (including unknown cause, if applicable).

(R) For each deviation from an emission limit in § 63.4890 or operating limit in Table 1 to this subpart, a list of the affected sources or equipment for which a deviation occurred, an estimate of the quantity of each regulated

sfrattini on LAPJZKW1R2 with $$_JOB
VerDate Sep<11>2014 09:16 Apr 04, 2023 Jkt 256165 PO 00000 Frm 01042 Fmt 8010 Sfmt 8010 Q:\40\256165.XXX PC31

pollutant emitted over any emission limit in §63.4890, and a description of the method used to estimate the emissions.

(b) *Performance test reports*. If you use the emission rate with add-on controls option, you must submit reports of performance test results for emission capture systems and add-on control devices no later than 60 days after completing the tests as specified in §63.10(d)(2).

(c) Before September 12, 2019, if you used the emission rate with add-on controls option and you had a startup, shutdown, or malfunction during the semiannual reporting period, you must submit the reports specified in paragraphs (c)(1) and (2) of this section. The reports specified in paragraphs (c)(1) and (2) of this section are not required on and after September 12, 2019.

(1) If your actions were consistent with your SSMP, you must include the information specified in §63.10(d)(5) in the semiannual compliance report required by paragraph (a) of this section.

(2) If your actions were not consistent with your SSMP, you must submit an immediate startup, shutdown, and malfunction report as described in paragraphs (c)(2)(i) and (ii) of this section.

(i) You must describe the actions taken during the event in a report delivered by facsimile, telephone, or other means to the Administrator within 2 working days after starting actions that are inconsistent with the plan.

(ii) You must submit a letter to the Administrator within 7 working days after the end of the event, unless you have made alternative arrangements with the Administrator as specified in §63.10(d)(5)(ii). The letter must contain the information specified in §63.10(d)(5)(ii).

[68 FR 28619, May 23, 2003, as amended at 84 FR 9636, Mar. 15, 2019]

§63.4921 What are my electronic reporting requirements?

(a) Beginning no later than June 13, 2019, you must submit the results of the performance test required §63.4920(b) following the procedure specified in paragraphs (a)(1) through (3) of this section.

(1) For data collected using test methods supported by the EPA's Electronic Reporting Tool (ERT) as listed on the EPA's ERT website147 (*https://www.epa.gov/electronic-reporting-air-emissions/electronic-reporting-tool-ert*) at the time of the test, you must submit the results of the performance test to the EPA via the Compliance and Emissions Data Reporting Interface (CEDRI). The CEDRI interface can be accessed through the EPA's Central Data Exchange (CDX) (*https://cdx.epa.gov/*). Performance test data must be submitted in a file format generated through the use of the EPA's ERT or an alternate electronic file format consistent with the extensible markup language (XML) schema listed on the EPA's ERT website.

(2) For data collected using test methods that are not supported by the EPA's ERT as listed on the EPA's ERT website at the time of the test, you must submit the results of the performance test to the Administrator at the appropriate address listed in §63.13, unless the Administrator agrees to or specifies an alternate reporting method.

(3) If you claim that some of the performance test information being submitted under paragraph (a)(1) of this section is confidential business information (CBI), you must submit a complete file generated through the use of the EPA's ERT or an alternate electronic file consistent with the XML schema listed on the EPA's ERT website, including information claimed to be CBI, on a compact disc, flash drive or other commonly used electronic storage medium to the EPA. The electronic medium must be clearly marked as CBI and mailed to U.S. EPA/OAQPS/CORE CBI Office, Attention: Group Leader, Measurement Policy Group, MD C404–02, 4930 Old Page Rd., Durham, NC 27703. The same ERT or alternate file with the CBI omitted must be submitted to the EPA via the EPA's CDX as described in paragraph (a)(1) of this section.

(b) Beginning on March 15, 2021, the owner or operator shall submit the initial notifications required in §63.9(b) and the notification of compliance status required in §63.9(h) and §63.4910(c) to the EPA via CEDRI. The CEDRI

sfrattini on LAPJZKW1R2 with $$_JOB
VerDate Sep<11>2014 09:16 Apr 04, 2023 Jkt 256165 PO 00000 Frm 01043 Fmt 8010 Sfmt 8010 Q:\40\256165.XXX PC31

interface can be accessed through the EPA's CDX (*https://cdx.epa.gov*). The owner or operator must upload to CEDRI an electronic copy of each applicable notification in portable document format (PDF). The applicable notification must be submitted by the deadline specified in this subpart, regardless of the method in which the reports are submitted. Owners or operators who claim that some of the information required to be submitted via CEDRI is CBI shall submit a complete report generated using the appropriate form in CEDRI or an alternate electronic file consistent with the extensible markup language (XML) schema listed on the EPA's CEDRI website, including information claimed to be CBI, on a compact disc, flash drive, or other commonly used electronic storage medium to the EPA. The electronic medium shall be clearly marked as CBI and mailed to U.S. EPA/OAQPS/CORE CBI Office, Attention: Group Leader, Measurement Policy Group, MD C404–02, 4930 Old Page Rd., Durham, NC 27703. The same file with the CBI omitted shall be submitted to the EPA via the EPA's CDX as described earlier in this paragraph.

(c) Beginning on March 15, 2021, or once the reporting template has been available on the CEDRI website for 1 year, whichever date is later, the owner or operator shall submit the semiannual compliance report required in § 63.4920 to the EPA via CEDRI. The CEDRI interface can be accessed through the EPA's CDX (*https://cdx.epa.gov*).). The owner or operator must use the appropriate electronic template on the CEDRI website for this subpart or an alternate electronic file format consistent with the XML schema listed on the CEDRI website (*https://www.epa.gov/electronic-reporting-air-emissions/compliance-and-emissions-data-reporting-interface-cedri*). The date report templates become available will be listed on the CEDRI website. If the reporting form for the semiannual compliance report specific to this subpart is not available in CEDRI at the time that the report is due, you must submit the report to the Administrator at the appropriate addresses listed in § 63.13. Once the form has been available in CEDRI for 1 year, you must begin submitting all subsequent reports via CEDRI. The reports must be submitted by the deadlines specified in this subpart, regardless of the method in which the reports are submitted. Owners or operators who claim that some of the information required to be submitted via CEDRI is CBI shall submit a complete report generated using the appropriate form in CEDRI or an alternate electronic file consistent with the XML schema listed on the EPA's CEDRI website, including information claimed to be CBI, on a compact disc, flash drive, or other commonly used electronic storage medium to the EPA. The electronic medium shall be clearly marked as CBI and mailed to U.S. EPA/OAQPS/CORE CBI Office, Attention: Group Leader, Measurement Policy Group, MD C404–02, 4930 Old Page Rd., Durham, NC 27703. The same file with the CBI omitted shall be submitted to the EPA via the EPA's CDX as described earlier in this paragraph.

(d) If you are required to electronically submit a report through CEDRI in the EPA's CDX, and due to a planned or actual outage of either the EPA's CEDRI or CDX systems within the period of time beginning 5 business days prior to the date that the submission is due, you will be or are precluded from accessing CEDRI or CDX and submitting a required report within the time prescribed, you may assert a claim of EPA system outage for failure to timely comply with the reporting requirement. You must submit notification to the Administrator in writing as soon as possible following the date you first knew, or through due diligence should have known, that the event may cause or caused a delay in reporting. You must provide to the Administrator a written description identifying the date, time and length of the outage; a rationale for attributing the delay in reporting beyond the regulatory deadline to the EPA system outage; describe the measures taken or to be taken to minimize the delay in reporting; and identify a date by which you propose to report, or if you have already met the reporting requirement at the time of the notification, the

sfrattini on LAPJZKW1R2 with $$_JOB
VerDate Sep<11>2014 09:16 Apr 04, 2023 Jkt 256165 PO 00000 Frm 01044 Fmt 8010 Sfmt 8010 Q:\40\256165.XXX PC31

date you reported. In any circumstance, the report must be submitted electronically as soon as possible after the outage is resolved. The decision to accept the claim of EPA system outage and allow an extension to the reporting deadline is solely within the discretion of the Administrator.

(e) If you are required to electronically submit a report through CEDRI in the EPA's CDX and a force majeure event is about to occur, occurs, or has occurred or there are lingering effects from such an event within the period of time beginning 5 business days prior to the date the submission is due, the owner or operator may assert a claim of force majeure for failure to timely comply with the reporting requirement. For the purposes of this section, a force majeure event is defined as an event that will be or has been caused by circumstances beyond the control of the affected facility, its contractors, or any entity controlled by the affected facility that prevents you from complying with the requirement to submit a report electronically within the time period prescribed. Examples of such events are acts of nature (*e.g.*, hurricanes, earthquakes, or floods), acts of war or terrorism, or equipment failure or safety hazard beyond the control of the affected facility (*e.g.*, large scale power outage). If you intend to assert a claim of force majeure, you must submit notification to the Administrator in writing as soon as possible following the date you first knew, or through due diligence should have known, that the event may cause or caused a delay in reporting. You must provide to the Administrator a written description of the force majeure event and a rationale for attributing the delay in reporting beyond the regulatory deadline to the force majeure event; describe the measures taken or to be taken to minimize the delay in reporting; and identify a date by which you propose to report, or if you have already met the reporting requirement at the time of the notification, the date you reported. In any circumstance, the reporting must occur as soon as possible after the force majeure event occurs. The decision to accept the claim of force majeure and allow an extension to the reporting deadline is solely within the discretion of the Administrator.

[84 FR 9638, Mar. 15, 2019]

§ 63.4930 What records must I keep?

You must collect and keep records of the data and information specified in this section. Failure to collect and keep these records is a deviation from the applicable standard.

(a) A copy of each notification and report that you submitted to comply with this subpart, and the documentation supporting each notification and report.

(b) A current copy of information provided by materials suppliers or manufacturers. This would include records pertaining to the design and manufacturer's specifications for the life of the add-on control equipment. It would also include information such as manufacturer's formulation data for the materials used, or test data used to determine the mass fraction of organic HAP and density for each coating, thinner, and cleaning material and the volume fraction of coating solids for each coating. If you conducted testing to determine mass fraction of organic HAP, density, or volume fraction of coating solids, you must keep a copy of the complete test report. If you use information provided to you by the manufacturer or supplier of the material that was based on testing, you must keep the summary sheet of results provided to you by the manufacturer or supplier. You are not required to obtain the test report or other supporting documentation from the manufacturer or supplier.

(c) For each compliance period, the records specified in paragraphs (c)(1) through (4) of this section.

(1) A record of the coating operations at which you used each compliance option and the time periods (beginning and ending dates and times) you used each option.

(2) For the compliant material option, a record of the calculation of the organic HAP content for each coating, using Equation 2 of § 63.4941.

(3) For the emission rate without add-on controls option, a record of the calculation of the total mass of organic

sfrattini on LAPJZKW1R2 with $$_JOB
VerDate Sep<11>2014 09:16 Apr 04, 2023 Jkt 256165 PO 00000 Frm 01045 Fmt 8010 Sfmt 8010 Q:\40\256165.XXX PC31

HAP emissions for the coatings, thinners, and cleaning materials used during each compliance period, using Equation 1 of § 63.4951 and, if applicable, the calculation used to determine the total mass of organic HAP in waste materials sent or designated for shipment to a hazardous waste TSDF for treatment or disposal during each compliance period, according to § 63.4951(e)(4); the calculation of the total volume of coating solids used during each compliance period, using Equation 2 of § 63.4951; and the calculation of the organic HAP emission rate for each compliance period, using Equation 3 of § 63.4951.

(4) For the emission rate with add-on controls option, records of the calculations specified in paragraphs (c)(4)(i) through (iv) of this section.

(i) The calculation of the total mass of organic HAP emissions for the coatings, thinners, and cleaning materials used during each compliance period, using Equation 1 of § 63.4951 and, if applicable, the calculation used to determine the total mass of organic HAP in waste materials sent or designated for shipment to a hazardous waste TSDF for treatment or disposal during each compliance period, according to § 63.4951(e)(4);

(ii) The calculation of the total volume of coating solids used during each compliance period, using Equation 2 of § 63.4951;

(iii) The calculation of the mass of organic HAP emission reduction by emission capture systems and add-on control devices, using Equation 1 of § 63.4961, and the calculation of the mass of organic HAP emission reduction for the coating operation controlled by a solvent recovery system during the compliance period, using Equation 3 of § 63.4961, as applicable;

(iv) The calculation of the organic HAP emission rate for each compliance period, using Equation 4 of § 63.4961.

(d) A record of the name and volume of each coating, thinner, and cleaning material used during each compliance period.

(e) A record of the mass fraction of organic HAP for each coating, thinner, and cleaning material used during each compliance period.

(f) A record of the volume fraction of coating solids for each coating used during each compliance period.

(g) If a determination of density is required by the compliance option(s) you used to demonstrate compliance with the emission limit, a record of the density for each coating used during each compliance period; and, if you use either the emission rate without add-on controls or the emission rate with add-on controls compliance option, the density for each thinner and cleaning material used during each compliance period.

(h) If you use an allowance in Equation 1 of § 63.4951 for organic HAP contained in waste materials sent to or designated for shipment to a TSDF according to § 63.4951(e)(4), you must keep records of the information specified in paragraphs (h)(1) through (3) of this section.

(1) The name and address of each TSDF to which you sent waste materials for which you use an allowance in Equation 1 of § 63.4951, a statement of which subparts under 40 CFR parts 262, 264, 265, and 266 apply to the facility, and the date of each shipment.

(2) Identification of the coating operations producing waste materials included in each shipment and the month or months in which you used the allowance for these materials in Equation 1 of § 63.4951.

(3) The methodology used in accordance with § 63.4951(e)(4) to determine the total amount of waste materials sent to or the amount collected, stored, and designated for transport to a TSDF each month; and the methodology to determine the mass of organic HAP contained in these waste materials. This must include the sources for all data used in the determination, methods used to generate the data, frequency of testing or monitoring, and supporting calculations and documentation, including the waste manifest for each shipment.

(i) [Reserved]

(j) Before September 12, 2019, you must keep records of the date, time, and duration of each deviation. On and after September 12, 2019, for each deviation from an emission limitation reported under § 63.4920(a)(5) through (7),

sfrattini on LAPJZKW1R2 with $$_JOB
VerDate Sep<11>2014 09:16 Apr 04, 2023 Jkt 256165 PO 00000 Frm 01046 Fmt 8010 Sfmt 8010 Q:\40\256165.XXX PC31

you must keep a record of the information specified in paragraphs (j)(1) through (4) of this section, as applicable.

(1) The date, time, and duration of the deviation, as reported under § 63.4920(a)(5) through (7).

(2) A list of the affected sources or equipment for which the deviation occurred and the cause of the deviation, as reported under § 63.4920(a)(5) through (7).

(3) An estimate of the quantity of each regulated pollutant emitted over any applicable emission limit in § 63.4890 or any applicable operating limit(s) in Table 1 to this subpart, and a description of the method used to calculate the estimate, as reported under § 63.4920(a)(5) through (7).

(4) A record of actions taken to minimize emissions in accordance with § 63.4900(b) and any corrective actions taken to return the affected unit to its normal or usual manner of operation.

(k) If you use the emission rate with add-on controls option, you must also keep the records specified in paragraphs (k)(1) through (8) of this section.

(1) Before September 12, 2019, for each deviation, a record of whether the deviation occurred during a period of startup, shutdown, or malfunction. The record in this paragraph (k)(1) is not required on and after September 12, 2019.

(2) Before September 12, 2019, the records in § 63.6(e)(3)(iii) through (v) related to startup, shutdown, and malfunction. The records in this paragraph (k)(2) are not required on and after September 12, 2019.

(3) The records required to show continuous compliance with each operating limit specified in Table 1 to this subpart that applies to you.

(4) For each capture system that is a PTE, the data and documentation you used to support a determination that the capture system meets the criteria in Method 204 of appendix M to 40 CFR part 51 for a PTE and has a capture efficiency of 100 percent, as specified in § 63.4964(a).

(5) For each capture system that is not a PTE, the data and documentation you used to determine capture efficiency according to the requirements specified in §§ 63.4963 and 63.4964(b) through (e), including the records specified in paragraphs (k)(5)(i) through (iii) of this section that apply to you.

(i) *Records for a liquid-to-uncaptured-gas protocol using a temporary total enclosure or building enclosure.* Records of the mass of total volatile hydrocarbon (TVH) as measured by Method 204A or F of appendix M to 40 CFR part 51 for each material used in the coating operation, and the total TVH for all materials used, during each capture efficiency test run, including a copy of the test report. Records of the mass of TVH emissions not captured by the capture system that exited the temporary total enclosure or building enclosure during each capture efficiency test run, as measured by Method 204D or E of appendix M to 40 CFR part 51, including a copy of the test report. Records documenting that the enclosure used for the capture efficiency test met the criteria in Method 204 of appendix M to 40 CFR part 51 for either a temporary total enclosure or a building enclosure.

(ii) *Records for a gas-to-gas protocol using a temporary total enclosure or a building enclosure.* Records of the mass of TVH emissions captured by the emission capture system as measured by Method 204B or C of appendix M to 40 CFR part 51 at the inlet to the add-on control device, including a copy of the test report. Records of the mass of TVH emissions not captured by the capture system that exited the temporary total enclosure or building enclosure during each capture efficiency test run, as measured by Method 204D or E of appendix M to 40 CFR part 51, including a copy of the test report. Records documenting that the enclosure used for the capture efficiency test met the criteria in Method 204 of appendix M to 40 CFR part 51 for either a temporary total enclosure or a building enclosure.

(iii) *Records for an alternative protocol.* Records needed to document a capture efficiency determination using an alternative method or protocol as specified in § 63.4964(e), if applicable.

(6) The records specified in paragraphs (k)(6)(i) and (ii) of this section for each add-on control device organic

sfrattini on LAPJZKW1R2 with $$_JOB
VerDate Sep<11>2014 09:16 Apr 04, 2023 Jkt 256165 PO 00000 Frm 01047 Fmt 8010 Sfmt 8010 Q:\40\256165.XXX PC31

HAP destruction or removal efficiency determination as specified in § 63.4965.

(i) Records of each add-on control device performance test conducted according to §§ 63.4963 and 63.4965.

(ii) Records of the coating operation conditions during the add-on control device performance test showing that the performance test was conducted under representative operating conditions.

(7) Records of the data and calculations you used to establish the emission capture and add-on control device operating limits as specified in § 63.4966 and to document compliance with the operating limits as specified in Table 1 to this subpart.

(8) A record of the work practice plan required by § 63.4893 and documentation that you are implementing the plan on a continuous basis.

[68 FR 28619, May 23, 2003, as amended at 84 FR 9639, Mar. 15, 2019]

§ 63.4931 In what form and for how long must I keep my records?

(a) Your records must be in a form suitable and readily available for expeditious review, according to § 63.10(b)(1). Where appropriate, the records may be maintained as electronic spreadsheets or as a database. Any records required to be maintained by this subpart that are in reports that were submitted electronically via the EPA's CEDRI may be maintained in electronic format. This ability to maintain electronic copies does not affect the requirement for facilities to make records, data, and reports available upon request to a delegated air agency or the EPA as part of an on-site compliance evaluation.

(b) As specified in § 63.10(b)(1), you must keep each record for 5 years following the date of each occurrence, measurement, maintenance, corrective action, report, or record.

(c) You must keep each record on-site for at least 2 years after the date of each occurrence, measurement, maintenance, corrective action, report, or record, according to § 63.10(b)(1). You may keep these records off-site for the remaining 3 years. You must keep records on-site pertaining to the design and manufacturer's specifications for operation of add-on control equipment for the life of the equipment.

[68 FR 28619, May 23, 2003, as amended at 84 FR 9639, Mar. 15, 2019]

COMPLIANCE REQUIREMENTS FOR THE COMPLIANT MATERIAL OPTION

§ 63.4940 By what date must I conduct the initial compliance demonstration?

You must complete the initial compliance demonstration for the initial compliance period according to the requirements in § 63.4941. The initial compliance period begins on the applicable compliance date specified in § 63.4883 and ends on the last day of the first full month following the compliance date. The initial compliance demonstration includes the calculations according to § 63.4941 and supporting documentation showing that, during the initial compliance period, you used no coating with an organic HAP content that exceeded the applicable emission limit in § 63.4890, and you used no thinners or cleaning materials that contained organic HAP.

§ 63.4941 How do I demonstrate initial compliance with the emission limitations?

You may use the compliant material option for any individual coating operation, for any group of coating operations in the affected source, or for all the coating operations in the affected source to demonstrate compliance with an organic HAP emission limit. You must use either the emission rate without add-on controls option or the emission rate with add-on controls option for any coating operation in the affected source for which you do not use this option. To demonstrate initial compliance using the compliant material option, during the compliance period the coating operation or group of coating operations must use no coating with an organic HAP content that exceeds the applicable emission limit in § 63.4890 and must use no thinner or cleaning material that contains organic HAP as determined according to this section. Any coating operation for which you use the compliant material option is not required to comply with the operating limits or work practice

sfrattini on LAPJZKW1R2 with $$_JOB
VerDate Sep<11>2014 09:16 Apr 04, 2023 Jkt 256165 PO 00000 Frm 01048 Fmt 8010 Sfmt 8010 Q:\40\256165.XXX PC31

standards required in §§63.4892 and 63.4893, respectively. To demonstrate initial compliance with the emission limitations using the compliant material option, you must meet all the requirements of this section for the coating operation or group of coating operations using this option. Use the procedures in this section for each coating, thinner, and cleaning material in the condition it is in when it is received from its manufacturer or supplier and prior to any alteration. You do not need to redetermine the organic HAP content of cleaning materials that are reclaimed and reused onsite provided these materials in their condition as received were demonstrated to comply with the compliant material option.

(a) *Determine the mass fraction of organic HAP for each material used.* You must determine the mass fraction of organic HAP for each coating, thinner, and cleaning material used during the compliance period by using one of the options in paragraphs (a)(1) through (5) of this section.

(1) *Method 311 (appendix A to 40 CFR part 63).* You may use Method 311 for determining the mass fraction of organic HAP. Use the procedures specified in paragraphs (a)(1)(i) and (ii) of this section when performing a Method 311 test.

(i) Count each organic HAP in Table 5 to this subpart that is measured to be present at 0.1 percent by mass or more and at 1.0 percent by mass or more for other organic HAP compounds. For example, if toluene (not listed in Table 5 to this subpart) is measured to be 0.5 percent of the material by mass, you do not have to count it. Express the mass fraction of each organic HAP you count as a value truncated to four places after the decimal point (for example, 0.3791).

(ii) Calculate the total mass fraction of organic HAP in the test material by adding up the individual organic HAP mass fractions and truncating the result to three places after the decimal point (for example, 0.763).

(2) *Method 24 in appendix A–7 of part 60.* For coatings, you may use Method 24 to determine the mass fraction of nonaqueous volatile matter and use that value as a substitute for mass fraction of organic HAP. As an alternative to using Method 24, you may use ASTM D2369–10 (R2015), ''Test Method for Volatile Content of Coatings'' (incorporated by reference, *see* §63.14).

(3) *Alternative method.* You may use an alternative test method for determining the mass fraction of organic HAP once the Administrator has approved it. You must follow the procedure in §63.7(f) to submit an alternative test method for approval.

(4) *Information from the supplier or manufacturer of the material.* You may rely on information other than that generated by the test methods specified in paragraphs (a)(1) through (3) of this section, such as manufacturer's formulation data, if it represents each organic HAP in Table 5 to this subpart that is present at 0.1 percent by mass or more and at 1.0 percent by mass or more for other organic HAP compounds. For example, if toluene (not listed in Table 5 to this subpart) is 0.5 percent of the material by mass, you do not have to count it. If there is a disagreement between such information and results of a test conducted according to paragraphs (a)(1) through (3) of this section, then the test method results will take precedence.

(5) *Solvent blends.* Solvent blends may be listed as single components for some materials in data provided by manufacturers or suppliers. Solvent blends may contain organic HAP which must be counted toward the total organic HAP mass fraction of the materials. When test data and manufacturer's data for solvent blends are not available, you may use the default values for the mass fraction of organic HAP in these solvent blends listed in Table 3 or 4 to this subpart. If you use the tables, you must use the values in Table 3 for all solvent blends that match Table 3 entries, and you may only use Table 4 if the solvent blends in the materials you use do not match any of the solvent blends in Table 3, and you only know whether the blend is aliphatic or aromatic. However, if the results of a Method 311 test indicate higher values than those listed on Table 3 or 4 of this subpart, the Method 311 results will take precedence.

(b) *Determine the volume fraction of coating solids for each coating.* You must

sfrattini on LAPJZKW1R2 with $$_JOB
VerDate Sep<11>2014 09:16 Apr 04, 2023 Jkt 256165 PO 00000 Frm 01049 Fmt 8010 Sfmt 8010 Q:\40\256165.XXX PC31

determine the volume fraction of coating solids (liters of coating solids per liter of coating) for each coating used during the compliance period by a test or by information provided by the supplier or the manufacturer of the material, as specified in paragraphs (b)(1), (2), and (3) of this section. If test results obtained according to paragraph (b)(1) of this section do not agree with the information obtained under paragraph (b)(2) or (3) of this section, the test results will take precedence.

(1) *Test results.* You may use ASTM D2697–03 (R2014), ''Standard Test Method for Volume Nonvolatile Matter in Clear or Pigmented Coatings'', or D6093–97 (R2016), ''Standard Test Method for Percent Volume Nonvolatile Matter in Clear or Pigmented Coatings Using a Helium Gas Pycnometer'' (both incorporated by reference, *see* § 63.14), to determine the volume fraction of coating solids for each coating. Divide the nonvolatile volume percent obtained with the methods by 100 to calculate volume fraction of coating solids. Alternatively, you may use another test method once you obtain approval from the Administrator according to the requirements of § 63.7(f).

(2) *Information from the supplier or manufacturer of the material.* You may obtain the volume fraction of coating solids for each coating from the supplier or manufacturer.

(3) *Calculation of volume fraction of coating solids.* If the volume fraction of coating solids cannot be determined using the options in paragraphs (b)(1) and (2) of this section, you must determine it using Equation 1 of this section:

$$V_s = 1 - \frac{M_{volatiles}}{D_{avg}} \qquad \text{(Eq. 1)}$$

Where:

V_s = Volume fraction of coating solids, liters coating solids per liter coating.

$M_{volatiles}$ = Total volatile matter content of the coating, including HAP, volatile organic compounds (VOC), water, and exempt compounds, determined according to Method 24 in appendix A–7 of part 60, or according to ASTM D2369—10 (R2015) Standard Test Method for Volatile Content of Coatings (incorporated by reference, *see* § 63.14), grams volatile matter per liter coating.

D_{avg} = Average density of volatile matter in the coating, grams volatile matter per liter volatile matter, determined from test results using ASTM D1475–13, ''Standard Test Method for Density of Liquid Coatings, Inks, and Related Products'' (incorporated by reference, *see* § 63.14), information from the supplier or manufacturer of the material, or reference sources providing density or specific gravity data for pure materials. If there is disagreement between ASTM D1475–13 test results and other information sources, the test results will take precedence.

(c) *Determine the density of each coating.* You must determine the density of each coating used during the compliance period from test results using ASTM D1475–13, ''Standard Test Method for Density of Liquid Coatings, Inks, and Related Products'' (incorporated by reference, *see* § 63.14), or information from the supplier or manufacturer of the material. If there is disagreement between ASTM D1475–13 test results and the supplier's or manufacturer's information, the test results will take precedence.

(d) *Calculate the organic HAP content of each coating.* Calculate the organic HAP content, kg organic HAP per liter coating solids, of each coating used during the compliance period, using Equation 2 of this section, except that if the mass fraction of organic HAP in the coating equals zero, then the organic HAP content also equals zero and you are not required to use Equation 2 to calculate the organic HAP content.

$$H_c = \frac{(D_c)(W_c)}{V_s} \qquad \text{(Eq. 2)}$$

Where:

H_c = Organic HAP content of the coating, kg organic HAP per liter coating solids.

D_c = Density of coating, kg coating per liter coating, determined according to paragraph (c) of this section.

W_c = Mass fraction of organic HAP in the coating, kg organic HAP per kg coating, determined according to paragraph (a) of this section.

V_s = Volume fraction of coating solids, liter coating solids per liter coating, determined according to paragraph (b) of this section.

(e) *Compliance demonstration.* The calculated organic HAP content for each

sfrattini on LAPJZKW1R2 with $$_JOB
VerDate Sep<11>2014 09:16 Apr 04, 2023 Jkt 256165 PO 00000 Frm 01050 Fmt 8010 Sfmt 8010 Q:\40\256165.XXX PC31
ER23MY03.019<.MATH> ER23MY03.020<.MATH>

coating used during the initial compliance period must be less than or equal to the applicable emission limit in §63.4890 and each thinner and cleaning material used during the initial compliance period must contain no organic HAP, determined according to paragraph (a) of this section. You must keep all records required by §§63.4930 and 63.4931. As part of the Notification of Compliance Status required in §63.4910(c) and the semiannual compliance reports required in §63.4920, you must identify each coating operation and group of coating operations for which you used the compliant material option. If there were no deviations from the emission limit, include a statement that each coating operation was in compliance with the emission limitations during the initial compliance period because it used no coatings for which the organic HAP content exceeded the applicable emission limit in §63.4890, and it used no thinners or cleaning materials that contained organic HAP.

[68 FR 28619, May 23, 2003, as amended at 84 FR 9639, Mar. 15, 2019]

§63.4942 How do I demonstrate continuous compliance with the emission limitations?

(a) Following the initial compliance period, you must complete a compliance demonstration according to the requirements in §63.4941(e) for each subsequent compliance period. Each month following the initial compliance period described in §63.4940 is a compliance period.

(b) If you choose to comply with the emission limitations by using the compliant material option, the use of any coating, thinner, or cleaning material that does not meet the criteria specified in paragraph (a) of this section is a deviation from the emission limitations that must be reported as specified in §§63.4910(c)(6) and 63.4920(a)(5).

(c) As part of each semiannual compliance report required by §63.4920, you must identify the coating operation or group of coating operations for which you used the compliant material option. If there were no deviations from the emission limits in §63.4890, submit an affirmative statement that the coating operation or group of coating operations was in compliance with the emission limitations during the reporting period because you used no coating for which the organic HAP content exceeded the applicable emission limit in §63.4890, and you used no thinner or cleaning material that contained organic HAP.

(d) You must maintain records as specified in §§63.4930 and 63.4931.

COMPLIANCE REQUIREMENTS FOR THE EMISSION RATE WITHOUT ADD-ON CONTROLS OPTION

§63.4950 By what date must I conduct the initial compliance demonstration?

You must complete the initial compliance demonstration for the initial compliance period according to the requirements of §63.4951. The initial compliance period begins on the applicable compliance date specified in §63.4883 and ends on the last day of the first full month following the compliance date. The initial compliance demonstration includes the calculations showing that the organic HAP emission rate for the initial compliance period was equal to or less than the applicable emission limit in §63.4890.

§63.4951 How do I demonstrate initial compliance with the emission limitations?

You may use the emission rate without add-on controls option for any individual coating operation, for any group of coating operations in the affected source, or for all the coating operations in the affected source to demonstrate compliance with an organic HAP emission limit. You must use either the compliant material option or the emission rate with add-on controls option for any coating operation in the affected source for which you do not use this option. To demonstrate initial compliance using the emission rate without add-on controls option, the coating operation or group of coating operations must comply with the applicable emission limit in §63.4890, but is not required to meet the operating limits or work practice standards in §§63.4892 and 63.4893, respectively. You must meet all the requirements of this section to demonstrate initial compliance with the applicable emission limit

sfrattini on LAPJZKW1R2 with $$_JOB
VerDate Sep<11>2014 09:16 Apr 04, 2023 Jkt 256165 PO 00000 Frm 01051 Fmt 8010 Sfmt 8010 Q:\40\256165.XXX PC31

in § 63.4890 for the coating operation or group of coating operations. When calculating the organic HAP emission rate according to this section, do not include any coatings, thinners, or cleaning materials used on coating operations for which you use the compliant material option or the emission rate with add-on controls option. You do not need to include organic HAP in coatings, thinners, or cleaning materials that have been reclaimed onsite and reused in the coating operation for which you use the emission rate without add-on controls option.

(a) *Determine the mass fraction of organic HAP for each material.* You must determine the mass fraction of organic HAP for each coating, thinner, and cleaning material used during the compliance period according to the requirements in § 63.4941(a).

(b) *Determine the volume fraction of coating solids for each coating.* You must determine the volume fraction of coating solids for each coating used during the compliance period according to the requirements in § 63.4941(b).

(c) *Determine the density of each material.* You must determine the density of each coating, thinner, and cleaning material used during the compliance period according to the requirements in § 63.4941(c).

(d) *Determine the volume of each material used.* You must determine the volume (liters) of each coating, thinner, and cleaning material used during the compliance period by measurement or usage records.

(e) *Calculate the mass of organic HAP emissions.* The mass of organic HAP emissions is the combined mass of organic HAP contained in all coatings, thinners, and cleaning materials used during the compliance period minus the organic HAP in certain waste materials. Use Equation 1 of this section to calculate the mass of organic HAP emissions:

$$H_e = A + B + C - R_w \qquad \text{(Eq. 1)}$$

Where:

H_e = Total mass of organic HAP emissions during the compliance period, kg.

A = Total mass of organic HAP in the coatings used during the compliance period, kg, as calculated in Equation 1A of this section.

B = Total mass of organic HAP in the thinners used during the compliance period, kg, as calculated in Equation 1B of this section.

C = Total mass of organic HAP in the cleaning materials used during the compliance period, kg, as calculated in Equation 1C of this section.

R_w = Total mass of organic HAP in waste materials sent or designated for shipment to a hazardous waste TSDF for treatment or disposal during the compliance period, kg, determined according to paragraph (e)(4) of this section. The mass of any waste material reused during the same compliance period may not be included in R_w. (You may assign a value of zero to R_w if you do not wish to use this allowance.)

(1) Calculate the mass of organic HAP in the coatings used during the compliance period, using Equation 1A of this section:

$$A = \sum_{i=1}^{m} \left(Vol_{c,i}\right)\left(D_{c,i}\right)\left(W_{c,i}\right) \qquad \text{(Eq. 1A)}$$

Where:

A = Total mass of organic HAP in the coatings used during the compliance period, kg.

$Vol_{c,i}$ = Total volume of coating, i, used during the compliance period, liters.

$D_{c,i}$ = Density of coating, i, kg coating per liter coating.

$W_{c,i}$ = Mass fraction of organic HAP in coating, i, kg organic HAP per kg coating.

m = Number of different coatings used during the compliance period.

(2) Calculate the mass of organic HAP in the thinners used during the compliance period, using Equation 1B of this section:

$$B = \sum_{j=1}^{n} \left(Vol_{t,j}\right)\left(D_{t,j}\right)\left(W_{t,j}\right) \qquad \text{(Eq. 1B)}$$

Where:

B = Total mass of organic HAP in the thinners used during the compliance period, kg.

$Vol_{t,j}$ = Total volume of thinner, j, used during the compliance period, liters.

$D_{t,j}$ = Density of thinner, j, kg per liter.

$W_{t,j}$ = Mass fraction of organic HAP in thinner, j, kg organic HAP per kg thinner.

n = Number of different thinners used during the compliance period.

(3) Calculate the mass of organic HAP in the cleaning materials used

sfrattini on LAPJZKW1R2 with $$_JOB
VerDate Sep<11>2014 09:16 Apr 04, 2023 Jkt 256165 PO 00000 Frm 01052 Fmt 8010 Sfmt 8010 Q:\40\256165.XXX PC31
ER23MY03.021<MATH> ER23MY03.022<MATH> ER23MY03.023<MATH>

during the compliance period using Equation 1C of this section:

$$C = \sum_{k=1}^{p} \left(Vol_{s,k}\right)\left(D_{s,k}\right)\left(W_{s,k}\right) \qquad \text{(Eq. 1C)}$$

Where:

C = Total mass of organic HAP in the cleaning materials used during the compliance period, kg.

$Vol_{s,k}$ = Total volume of cleaning material, k, used during the compliance period, liters.

$D_{s,k}$ = Density of cleaning material, k, kg per liter.

$W_{s,k}$ = Mass fraction of organic HAP in cleaning material, k, kg organic HAP per kg material.

p = Number of different cleaning materials used during the compliance period.

(4) If you choose to account for the mass of organic HAP contained in waste materials sent or designated for shipment to a hazardous waste TSDF in the calculation of the total mass of organic HAP emissions during the compliance period in Equation 1 of this section, then you must determine the total mass of organic HAP in waste materials sent or designated for shipment to a hazardous waste TSDF for treatment or disposal during each compliance period, according to paragraphs (e)(4)(i) through (iv) of this section.

(i) You may include in the determination of the total mass of organic HAP in waste materials sent or designated for shipment to a hazardous waste TSDF for treatment or disposal during each compliance period only waste materials that are generated by coating operations for which you use Equation 1 of this section and that will be treated or disposed of by a facility regulated as a TSDF under 40 CFR part 262, 264, 265, or 266. The TSDF may be either off-site or on-site. You may not include in the determination of the total mass of organic HAP in waste materials sent or designated for shipment to a hazardous waste TSDF for treatment or disposal during each compliance period only waste materials that are generated by coating operations the organic HAP contained in wastewater, nor the organic HAP contained in any waste material reused during the same compliance period.

(ii) You must determine either the amount of the waste materials sent to a TSDF during the compliance period or the amount collected and stored during the compliance period and designated for future transport to a TSDF. Do not include in your determination of the total mass of organic HAP in waste materials sent or designated for shipment to a hazardous waste TSDF for treatment or disposal during each compliance period only waste materials that are generated by coating operations any waste materials sent to a TSDF during a compliance period if you have already included them in the amount collected and stored during that or a previous compliance period.

(iii) Determine the total mass of organic HAP contained in the waste materials specified in paragraph (e)(4)(ii) of this section.

(iv) You must document your methodology to determine the amount of waste materials and the total mass of organic HAP they contain, as required in §63.4930(h). To the extent that waste manifests include this information, they may be used as part of the documentation of the amount of waste materials and mass of organic HAP contained in them.

(f) *Calculate the total volume of coating solids used.* Calculate the total volume of coating solids used, which is the combined volume of coating solids for all the coatings used during the compliance period, using Equation 2 of this section:

$$V_{st} = \sum_{i=1}^{m} \left(Vol_{c,i}\right)\left(V_{s,i}\right) \qquad \text{(Eq. 2)}$$

Where:

V_{st} = Total volume of coating solids used during the compliance period, liters.

$Vol_{c,i}$ = Total volume of coating, i, used during the compliance period, liters.

$V_{s,i}$ = Volume fraction of coating solids for coating, i, liter solids per liter coating, determined according to §63.4941(b).

m = Number of coatings used during the compliance period.

(g) *Calculate the organic HAP emission rate.* Calculate the organic HAP emission rate for the compliance period, kg organic HAP per liter coating solids used, using Equation 3 of this section:

$$H_{avg} = \frac{H_e}{V_{st}} \qquad \text{(Eq. 3)}$$

Where:

sfrattini on LAPJZKW1R2 with $$_JOB
VerDate Sep<11>2014 09:16 Apr 04, 2023 Jkt 256165 PO 00000 Frm 01053 Fmt 8010 Sfmt 8010 Q:\40\256165.XXX PC31
ER23MY03.024<.MATH> ER23MY03.025<.MATH> ER23MY03.026<.MATH>

H_{avg} = Organic HAP emission rate for the compliance period, kg organic HAP per liter coating solids.

H_e = Total mass of organic HAP emissions from all materials used during the compliance period, kg, as calculated by Equation 1 of this section.

V_{st} = Total volume of coating solids used during the compliance period, liters, as calculated by Equation 2 of this section.

(h) *Compliance demonstration.* The calculated organic HAP emission rate for the initial compliance period must be less than or equal to the applicable emission limit in § 63.4890. You must keep all records as required by §§ 63.4930 and 63.4931. As part of the Notification of Compliance Status required by § 63.4910 and the semiannual compliance reports required in § 63.4920, you must identify the coating operation or group of coating operations for which you used the emission rate without add-on controls option. If there were no deviations from the emission limit, include a statement that the coating operation or group of coating operations was in compliance with the emission limitations during the initial compliance period because the organic HAP emission rate was less than or equal to the applicable emission limit in § 63.4890, determined according to this section.

[68 FR 28619, May 23, 2003, as amended at 84 FR 9640, Mar. 15, 2019]

§ 63.4952 How do I demonstrate continuous compliance with the emission limitations?

(a) Following the initial compliance period, you must complete a compliance demonstration according to the requirements in § 63.4951(h) for each subsequent compliance period. Each month following the initial compliance period described in § 63.4950 is a compliance period.

(b) If the organic HAP emission rate for any compliance period exceeded the applicable emission limit in § 63.4890, this is a deviation from the emission limitations for that compliance period and must be reported as specified in §§ 63.4910(c)(6) and 63.4920(a)(6).

(c) As part of each semiannual compliance report required by § 63.4920, you must identify the coating operation or group of coating operations for which you used the emission rate without add-on controls option. If there were no deviations from the emission limitations, you must submit an affirmative statement that the coating operation or group of coating operations was in compliance with the emission limitations during the reporting period because the organic HAP emission rate for each compliance period was less than or equal to the applicable emission limit in § 63.4890.

(d) You must maintain records as specified in §§ 63.4930 and 63.4931.

COMPLIANCE REQUIREMENTS FOR THE EMISSION RATE WITH ADD-ON CONTROLS OPTION

§ 63.4960 By what date must I conduct initial performance tests and other initial compliance demonstrations?

(a) *New and reconstructed affected sources.* For a new or reconstructed affected source, you must meet the requirements of paragraphs (a)(1) through (4) of this section.

(1) All emission capture systems, add-on control devices, and CPMS must be installed and operating no later than the applicable compliance date specified in § 63.4883. Except for solvent recovery systems for which you conduct liquid-liquid material balances according to § 63.4961(j), you must conduct a performance test of each capture system and add-on control device according to §§ 63.4963, 63.4964, and 63.4965, and establish the operating limits required by § 63.4892, no later than 180 days after the applicable compliance date specified in § 63.4883. For a solvent recovery system for which you conduct liquid-liquid material balances according to § 63.4961(j), you must initiate the first material balance no later than 180 days after the applicable compliance date specified in § 63.4883.

(2) You must develop and begin implementing the work practice plan required by § 63.4893 no later than the compliance date specified in § 63.4883.

(3) You must complete the initial compliance demonstration for the initial compliance period according to the requirements of § 63.4961. The initial compliance period begins on the applicable compliance date specified in § 63.4883 and ends on the last day of the

sfrattini on LAPJZKW1R2 with $$_JOB
VerDate Sep<11>2014 09:16 Apr 04, 2023 Jkt 256165 PO 00000 Frm 01054 Fmt 8010 Sfmt 8010 Q:\40\256165.XXX PC31

first full month following the compliance date. The initial compliance demonstration includes the results of emission capture system and add-on control device performance tests conducted according to §§63.4963, 63.4964, and 63.4965; results of liquid-liquid material balances conducted according to §63.4961(j); calculations showing whether the organic HAP emission rate for the initial compliance period was equal to or less than the emission limit in §63.4890; the operating limits established during the performance tests and the results of the continuous parameter monitoring required by §63.4967; and documentation of whether you developed and implemented the work practice plan required by §63.4893.

(4) You do not need to comply with the operating limits for the emission capture system and add-on control device required by §63.4892 until after you have completed the performance tests specified in paragraph (a)(1) of this section. Instead, you must maintain a log detailing the operation and maintenance of the emission capture system, add-on control device, and continuous parameter monitors during the period between the compliance date and the performance test. You must begin complying with the operating limits for your affected source on the date you complete the performance tests specified in paragraph (a)(1) of this section. The requirements in this paragraph (a)(4) do not apply to solvent recovery systems for which you conduct liquid-liquid material balances.

(b) *Existing affected sources.* For an existing affected source, you must meet the requirements of paragraphs (b)(1) through (3) of this section.

(1) All emission capture systems, add-on control devices, and CPMS must be installed and operating no later than the applicable compliance date specified in §63.4883. Except for solvent recovery systems for which you conduct liquid-liquid material balances according to §63.4961(j), you must conduct a performance test of each capture system and add-on control device according to the procedures in §§63.4963, 63.4964, and 63.4965, and establish the operating limits required by §63.4892, no later than the compliance date specified in §63.4883. For a solvent recovery system for which you conduct liquid-liquid material balances according to §63.4961(j), you must initiate the first material balance no later than the compliance date specified in §63.4883.

(2) You must develop and begin implementing the work practice plan required by §63.4893 no later than the compliance date specified in §63.4883.

(3) You must complete the initial compliance demonstration for the initial compliance period according to the requirements of §63.4961. The initial compliance period begins on the applicable compliance date specified in §63.4883 and ends on the last day of the first full month following the compliance date. The initial compliance demonstration includes the results of emission capture system and add-on control device performance tests conducted according to §§63.4963, 63.4964, and 63.4965; results of liquid-liquid material balances conducted according to §63.4961(j); calculations showing whether the organic HAP emission rate for the initial compliance period was equal to or less than the emission limit in §63.4890(c); the operating limits established during the performance tests and the results of the continuous parameter monitoring required by §63.4967; and documentation of whether you developed and implemented the work practice plan required by §63.4893.

§63.4961 How do I demonstrate initial compliance?

(a) *When add-on controls are used.* You may use the emission rate with add-on controls option for any coating operation, for any group of coating operations in the affected source, or for all of the coating operations in the affected source. You may include both controlled and uncontrolled coating operations in a group for which you use this option. You must use either the compliant material option or the emission rate without add-on controls option for any coating operation in the affected source for which you do not use the emission rate with add-on controls option. To demonstrate initial compliance, the coating operation or group of coating operations for which you use the emission rate with add-on controls option must meet the applicable emission limit in §63.4890, and each

sfrattini on LAPJZKW1R2 with $$_JOB
VerDate Sep<11>2014 09:16 Apr 04, 2023 Jkt 256165 PO 00000 Frm 01055 Fmt 8010 Sfmt 8010 Q:\40\256165.XXX PC31

controlled coating operation must meet the operating limits and work practice standards required in §§ 63.4892 and 63.4893, respectively. You must meet all the requirements of this section to demonstrate initial compliance with the emission limitations. When calculating the organic HAP emission rate according to this section, do not include any coatings, thinners, or cleaning materials used on coating operations for which you use the compliant material option or the emission rate without add-on controls option.

(b) *Compliance with operating limits.* Except as provided in § 63.4960(a)(4), you must establish and demonstrate continuous compliance during the initial compliance period with the operating limits required by § 63.4892, using the procedures specified in §§ 63.4966 and 63.4967.

(c) *Compliance with work practice requirements.* You must develop, implement, and document your implementation of the work practice plan required by § 63.4893 during the initial compliance period, as specified in § 63.4930.

(d) *Compliance with emission limits.* You must follow the procedures in paragraphs (e) through (m) of this section to demonstrate compliance with the applicable emission limit in § 63.4890.

(e) *Determine the mass fraction of organic HAP, density, volume used, and volume fraction of coating solids.* Follow the procedures specified in § 63.4951(a) through (d) to determine the mass fraction of organic HAP, density, and volume of each coating, thinner, and cleaning material used during each compliance period and the volume fraction of coating solids for each coating used during each compliance period.

(f) *Calculate the total mass of organic HAP emissions before add-on controls.* Using Equation 1 of § 63.4951, calculate the total mass of organic HAP emissions before add-on controls from all coatings, thinners, and cleaning materials used during the compliance period.

(g) *Calculate the organic HAP emission reduction for each controlled coating operation.* Determine the mass of organic HAP emissions reduced for each controlled coating operation during each compliance period. The emission reduction determination quantifies the total organic HAP emissions that pass through the emission capture system and are destroyed or removed by the add-on control device. Use the procedures in paragraph (h) of this section to calculate the mass of organic HAP emission reduction for each controlled coating operation using an emission capture system and add-on control device other than a solvent recovery system for which you conduct liquid-liquid material balances. For each controlled coating operation using a solvent recovery system for which you conduct a liquid-liquid material balance, use the procedures in paragraph (j) of this section to calculate the organic HAP emission reduction.

(h) *Calculate the organic HAP emission reduction for controlled coating operations not using liquid-liquid material balance.* For each controlled coating operation using an emission capture system and add-on control device other than a solvent recovery system for which you conduct liquid-liquid material balances, calculate the organic HAP emission reduction, using Equation 1 of this section. The calculation applies the emission capture system efficiency and add-on control device efficiency to the mass of organic HAP contained in the coatings, thinners, and cleaning materials that are used in the coating operation served by the emission capture system and add-on control device during the compliance period. For any period of time a deviation specified in § 63.4962(c) or (d) occurs in the controlled coating operation, you must assume zero efficiency for the emission capture system and add-on control device. Equation 1 of this section treats the materials used during such a deviation as if they were used on an uncontrolled coating operation for the time period of the deviation:

sfrattini on LAPJZKW1R2 with $$_JOB
VerDate Sep<11>2014 09:16 Apr 04, 2023 Jkt 256165 PO 00000 Frm 01056 Fmt 8010 Sfmt 8010 Q:\40\256165.XXX PC31

$$H_R = (A_I + B_I + C_I - R_w)\left(\frac{CE}{100} \times \frac{DRE}{100}\right) + H_{unc} \qquad \text{(Eq. 1)}$$

Where:

H_R = Mass of organic HAP emission reduction for the controlled coating operation during the compliance period, kg.

A_I = Total mass of organic HAP in the coatings used in the controlled coating operation during the compliance period, excluding coatings used during deviations, kg, as calculated in Equation 1A of this section.

B_I = Total mass of organic HAP in the thinners used in the controlled coating operation during the compliance period, excluding thinners used during deviations, kg, as calculated in Equation 1B of this section.

C_I = Total mass of organic HAP in the cleaning materials used in the controlled coating operation during the compliance period, excluding cleaning materials used during deviations, kg, as calculated in Equation 1C of this section.

R_w = Total mass of organic HAP in waste materials sent or designated for shipment to a hazardous waste TSDF for treatment or disposal during the compliance period, kg, determined according to §63.4951(e)(4). The mass of any waste material reused during the same compliance period may not be included in R_w. (You may assign a value of zero to R_w if you do not wish to use this allowance.)

CE = Capture efficiency of the emission capture system vented to the add-on control device, percent. Use the test methods and procedures specified in §§63.4963 and 63.4964 to measure and record capture efficiency.

DRE = Organic HAP destruction or removal efficiency of the add-on control device, percent. Use the test methods and procedures in §§63.4963 and 63.4965 to measure and record the organic HAP destruction or removal efficiency.

H_{unc} = Total mass of organic HAP in the coatings, thinners, and cleaning materials used during all deviations specified in §63.4962(c) and (d) that occurred during the compliance period in the controlled coating operation, kg, as calculated in Equation 1D of this section.

(1) Calculate the mass of organic HAP in the coatings used in the controlled coating operation, using Equation 1A of this section. Do not include in the calculation the coatings used during any deviation specified in §63.4962(c) or (d) that occurred during the month. Include such coatings in the calculation of the total mass of organic HAP in the coatings, thinners, and cleaning materials used during all deviations that occurred during the compliance period in the controlled coating operation in Equation 1D of this section.

$$A_I = \sum_{i=1}^{m} (Vol_{c,i})(D_{c,i})(W_{c,i}) \qquad \text{(Eq. 1A)}$$

Where:

A_I = Total mass of organic HAP in the coatings used in the controlled coating operation during the compliance period, excluding coatings used during deviations, kg.

$Vol_{c,i}$ = Total volume of coating, i, used during the compliance period except during deviations, liters.

$D_{c,i}$ = Density of coating, i, kg per liter.

$W_{c,i}$ = Mass fraction of organic HAP in coating, i, kg per kg.

m = Number of different coatings used.

(2) Calculate the mass of organic HAP in the thinners used in the controlled coating operation, using Equation 1B of this section. Do not include in the calculation the thinners used during any deviation specified in §63.4962(c) or (d) that occurred during the month. Include such coatings in the calculation of the total mass of organic HAP in the coatings, thinners, and cleaning materials used during all deviations that occurred during the compliance period in the controlled coating operation in Equation 1D of this section.

$$B_I = \sum_{j=1}^{n} (Vol_{t,j})(D_{t,j})(W_{t,j}) \qquad \text{(Eq. 1B)}$$

Where:

B_I = Total mass of organic HAP in the thinners used in the controlled coating operation during the compliance period, excluding thinners used during deviations, kg.

$Vol_{t,j}$ = Total volume of thinner, j, used during the compliance period except during deviations, liters.

$D_{t,j}$ = Density of thinner, j, kg per liter.

sfrattini on LAPJZKW1R2 with $$_JOB
VerDate Sep<11>2014 09:16 Apr 04, 2023 Jkt 256165 PO 00000 Frm 01057 Fmt 8010 Sfmt 8010 Q:\40\256165.XXX PC31
ER15MR19.001</GPH> ER23MY03.028</MATH> ER23MY03.029</MATH>

$W_{t,j}$ = Mass fraction of organic HAP in thinner, j, kg per kg.
n = Number of different thinners used.

(3) Calculate the mass of organic HAP in the cleaning materials used in the controlled coating operation, using Equation 1C of this section. Do not include in the calculation the cleaning materials used during any deviation specified in § 63.4962(c) or (d) that occurred during the compliance period. Include such cleaning materials in the calculation of the total mass of organic HAP in the coatings, thinners, and cleaning materials used during all deviations that occurred during the compliance period in the controlled coating operation in Equation 1D of this section.

$$C_I = \sum_{k=1}^{p} \left(Vol_{s,k}\right)\left(D_{s,k}\right)\left(W_{s,k}\right) \quad \text{(Eq. 1C)}$$

Where:

C_I = Total mass of organic HAP in the cleaning materials used in the controlled coating operation during the compliance period, excluding cleaning materials used during deviations, kg.
$Vol_{s,k}$ = Total volume of cleaning material, k, used during the compliance period except during deviations, liters.
$D_{s,k}$ = Density of cleaning material, k, kg per liter.
$W_{s,k}$ = Mass fraction of organic HAP in cleaning material, k, kg per kg.
p = Number of different cleaning materials used.

(4) Calculate the mass of organic HAP in the coatings, thinners, and cleaning materials used in the controlled coating operation during deviations specified in § 63.4962(c) and (d), using Equation 1D of this section:

$$H_{unc} = \sum_{h=1}^{q} \left(Vol_h\right)\left(D_h\right)\left(W_h\right) \quad \text{(Eq. 1D)}$$

Where:

H_{unc} = Total mass of organic HAP in the coatings, thinners, and cleaning materials used during all deviations specified in § 63.4962(c) and (d) that occurred during the compliance period in the controlled coating operation, kg.
Vol_h = Total volume of coating, thinner, or cleaning material, h, used in the controlled coating operation during deviations, liters.
D_h = Density of coating, thinner, or cleaning material, h, kg per liter.
W_h = Mass fraction of organic HAP in coating, thinner, or cleaning material, h, kg organic HAP per kg coating.
q = Number of different coatings, thinning solvents, or cleaning materials.

(i) [Reserved]

(j) *Calculate the organic HAP emission reduction for controlled coating operations using liquid-liquid material balance.* For each controlled coating operation using a solvent recovery system for which you conduct liquid-liquid material balances, calculate the organic HAP emission reduction by applying the volatile organic matter collection and recovery efficiency to the mass of organic HAP contained in the coatings, thinners, and cleaning materials that are used in the coating operation controlled by the solvent recovery system during the compliance period. Perform a liquid-liquid material balance for each compliance period as specified in paragraphs (j)(1) through (6) of this section. Calculate the mass of organic HAP emission reduction by the solvent recovery system as specified in paragraph (j)(7) of this section.

(1) For each solvent recovery system, you must install, calibrate, maintain, and operate according to the manufacturer's specifications, a device that indicates the cumulative amount of volatile organic matter recovered by the solvent recovery system each compliance period. The device must be initially certified by the manufacturer to be accurate to within ±2.0 percent of the mass of volatile organic matter recovered.

(2) For each solvent recovery system, determine the mass of volatile organic matter recovered for the compliance period, based on measurement with the device required in paragraph (j)(1) of this section.

(3) Determine the mass fraction of volatile organic matter for each coating, thinner, and cleaning material used in the coating operation controlled by the solvent recovery system during the compliance period. You may determine the volatile organic matter mass fraction using Method 24 in appendix A–7 of part 60, ASTM D2369–10 (R2015), ''Test Method for Volatile Content of Coatings'' (incorporated by reference, *see* § 63.14), or an EPA-approved alternative method. Alternatively, you

sfrattini on LAPJZKW1R2 with $$_JOB
VerDate Sep<11>2014 09:16 Apr 04, 2023 Jkt 256165 PO 00000 Frm 01058 Fmt 8010 Sfmt 8010 Q:\40\256165.XXX PC31
ER23MY03.030<.MATH> ER23MY03.031<.MATH>

may use information provided by the manufacturer or supplier of the coating. In the event of any inconsistency between information provided by the manufacturer or supplier and the results of Method 24, ASTM D2369–10 (R2015), or an approved alternative method, the test method results will govern.

(4) Determine the density of each coating, thinner, and cleaning material used in the coating operation controlled by the solvent recovery system during the compliance period according to §63.4951(c).

(5) Measure the volume of each coating, thinner, and cleaning material used in the coating operation controlled by the solvent recovery system during the compliance period.

(6) For each compliance period, calculate the solvent recovery system's volatile organic matter collection and recovery efficiency, using Equation 2 of this section:

$$R_v = 100 \frac{M_{VR}}{\sum_{i=1}^{m} Vol_i D_i WV_{c,i} + \sum_{j=1}^{n} Vol_j D_j WV_{t,j} + \sum_{k=1}^{p} Vol_k D_k WV_{s,k}} \qquad \text{(Eq. 2)}$$

Where:

R_V = Volatile organic matter collection and recovery efficiency of the solvent recovery system during the compliance period, percent.

M_{VR} = Mass of volatile organic matter recovered by the solvent recovery system during the compliance period, kg.

Vol_i = Volume of coating, i, used in the coating operation controlled by the solvent recovery system during the compliance period, liters.

D_i = Density of coating, i, kg per liter.

$WV_{c,i}$ = Mass fraction of volatile organic matter for coating, i, kg volatile organic matter per kg coating.

Vol_j = Volume of thinner, j, used in the coating operation controlled by the solvent recovery system during the compliance period, liters.

D_j = Density of thinner, j, kg per liter.

$WV_{t,j}$ = Mass fraction of volatile organic matter for thinner, j, kg volatile organic matter per kg thinner.

Vol_k = Volume of cleaning material, k, used in the coating operation controlled by the solvent recovery system during the compliance period, liters.

D_k = Density of cleaning material, k, kg per liter.

$WV_{s,k}$ = Mass fraction of volatile organic matter for cleaning material, k, kg volatile organic matter per kg cleaning material.

m = Number of different coatings used in the coating operation controlled by the solvent recovery system during the compliance period.

n = Number of different thinners used in the coating operation controlled by the solvent recovery system during the compliance period.

p = Number of different cleaning materials used in the coating operation controlled by the solvent recovery system during the compliance period.

(7) Calculate the mass of organic HAP emission reduction for the coating operation controlled by the solvent recovery system during the compliance period, using Equation 3 of this section:

$$H_{CSR} = \left(A_{CSR} + B_{CSR} + C_{CSR}\right)\left(\frac{R_V}{100}\right) \qquad \text{(Eq. 3)}$$

Where:

H_{CSR} = Mass of organic HAP emission reduction for the coating operation controlled by the solvent recovery system during the compliance period, kg.

A_{CSR} = Total mass of organic HAP in the coatings used in the coating operation controlled by the solvent recovery system, kg, calculated using Equation 3A of this section.

sfrattini on LAPJZKW1R2 with $$_JOB
VerDate Sep<11>2014 09:16 Apr 04, 2023 Jkt 256165 PO 00000 Frm 01059 Fmt 8010 Sfmt 8010 Q:\40\256165.XXX PC31
ER23MY03.032<.MATH> ER23MY03.033<.MATH>

B_{CSR} = Total mass of organic HAP in the thinners used in the coating operation controlled by the solvent recovery system, kg, calculated using Equation 3B of this section.

C_{CSR} = Total mass of organic HAP in the cleaning materials used in the coating operation controlled by the solvent recovery system, kg, calculated using Equation 3C of this section.

R_V = Volatile organic matter collection and recovery efficiency of the solvent recovery system, percent, from Equation 2 of this section.

(i) Calculate the mass of organic HAP in the coatings used in the coating operation controlled by the solvent recovery system, kg, using Equation 3A of this section.

$$A_{CSR} = \sum_{i=1}^{m} \left(Vol_{c,i}\right)\left(D_{c,i}\right)\left(W_{c,i}\right) \quad \text{(Eq. 3A)}$$

Where:

A_{CSR} = Total mass of organic HAP in the coatings used in the coating operation controlled by the solvent recovery system during the month, kg.

$Vol_{c,i}$ = Total volume of coating, i, used during the month in the coating operation controlled by the solvent recovery system, liters.

$D_{c,i}$ = Density of coating, i, kg coating per liter coating.

$W_{c,i}$ = Mass fraction of organic HAP in coating, i, kg organic HAP per kg coating.

m = Number of different coatings used.

(ii) Calculate the mass of organic HAP in the thinners used in the coating operation controlled by the solvent recovery system, using Equation 3B of this section:

$$B_{CSR} = \sum_{j=1}^{n} \left(Vol_{t,j}\right)\left(D_{t,j}\right)\left(W_{t,j}\right) \quad \text{(Eq. 3B)}$$

Where:

B_{CSR} = Total mass of organic HAP in the thinners used in the coating operation controlled by the solvent recovery system during the month, kg.

$Vol_{t,j}$ = Total volume of thinner, j, used during the month in the coating operation controlled by the solvent recovery system, liters.

$D_{t,j}$ = Density of thinner, j, kg thinner per liter thinner.

$W_{t,j}$ = Mass fraction of organic HAP in thinner, j, kg organic HAP per kg thinner.

n = Number of different thinners used.

(iii) Calculate the mass of organic HAP in the cleaning materials used in the coating operation controlled by the solvent recovery system during the month, using Equation 3C of this section:

$$C_{CSR} = \sum_{k=1}^{p} \left(Vol_{s,k}\right)\left(D_{s,k}\right)\left(W_{s,k}\right) \quad \text{(Eq. 3C)}$$

Where:

C_{CSR} = Total mass of organic HAP in the cleaning materials used in the coating operation controlled by the solvent recovery system during the month, kg.

$Vol_{s,k}$ = Total volume of cleaning material, k, used during the month in the coating operation controlled by the solvent recovery system, liters.

$D_{s,k}$ = Density of cleaning material, k, kg cleaning material per liter cleaning material.

$W_{s,k}$ = Mass fraction of organic HAP in cleaning material, k, kg organic HAP per kg cleaning material.

p = Number of different cleaning materials used.

(k) *Calculate the total volume of coating solids used.* Calculate the total volume of coating solids used, which is the combined volume of coating solids for all the coatings used during the compliance period, using Equation 2 of § 63.4951.

(l) *Calculate the organic HAP emissions rate.* Calculate the organic HAP emission rate to the atmosphere, using Equation 4 of this section:

$$H_{hap} = \frac{H_e - \sum_{i=1}^{q}\left(H_{R,i}\right) - \sum_{j=1}^{r}\left(H_{CSR,j}\right)}{V_{st}} \quad \text{(Eq. 4)}$$

Where:

H_{hap} = Organic HAP emission rate for the compliance period, kg organic HAP per liter coating solids.

H_e = Total mass of organic HAP emissions before add-on controls from all the coatings, thinners, and cleaning materials used during the compliance period, kg, determined according to paragraph (f) of this section.

sfrattini on LAPJZKW1R2 with $$_JOB
VerDate Sep<11>2014 09:16 Apr 04, 2023 Jkt 256165 PO 00000 Frm 01060 Fmt 8010 Sfmt 8010 Q:\40\256165.XXX PC31
ER23MY03.034</MATH> ER23MY03.035</MATH> ER23MY03.036</MATH> ER23MY03.037</MATH>

$H_{R,i}$ = Total mass of organic HAP emission reduction for controlled coating operation, i, not using liquid-liquid material balances, during the compliance period, kg, from Equation 1 of this section.

$H_{CSR,j}$ = Total mass of organic HAP emission reduction for controlled coating operation, j, using a liquid-liquid material balance, during the compliance period, kg, from Equation 3 of this section.

V_{st} = Total volume of coating solids used during the compliance period, liters, from Equation 2 of §63.4951.

q = Number of controlled coating operations except those controlled with a solvent recovery system.

r = Number of coating operations controlled with a solvent recovery system.

(m) *Compliance demonstration.* To demonstrate initial compliance with the emission limit during the compliance period as calculated using Equation 4 of this section, the HAP emission rate for the compliance period must be less than or equal to the applicable emission limit in §63.4890. You must keep all records as required by §§63.4930 and 63.4931. As part of the Notification of Compliance Status required by §63.4910 and the semiannual compliance reports required in §63.4920, you must identify the coating operation or group of coating operations for which you used the emission rate with add-on controls option. If there were no deviations from the emission limit, include a statement that the coating operation or group of coating operations was in compliance with the emission limitations during the initial compliance period because the organic HAP emission rate was less than or equal to the applicable emission limit in §63.4890, and you achieved the operating limits required by §63.4892 and the work practice standards required by §63.4893.

[68 FR 28619, May 23, 2003, as amended at 84 FR 9640, Mar. 15, 2019]

§63.4962 How do I conduct periodic performance tests and demonstrate continuous compliance with the emission limitations?

(a) Following the initial compliance period, you must complete a compliance demonstration according to the requirements in §63.4961(m) for each subsequent compliance period. Each month following the initial compliance period described in §63.4960 is a compliance period.

(b) If the organic HAP emission rate for any compliance period exceeded the applicable emission limit in §63.4890, this is a deviation from the emission limitation for that compliance period and must be reported as specified in §§63.4910(c)(6) and 63.4920(a)(7).

(c) You must demonstrate continuous compliance with each operating limit required by §63.4892 that applies to you, as specified in Table 1 to this subpart, and you must conduct periodic performance tests as specified in paragraph (c)(3) of this section.

(1) If an operating parameter is out of the allowed range specified in Table 1 to this subpart, this is a deviation from the operating limit that must be reported as specified in §§63.4910(c)(6) and 63.4920(a)(7).

(2) If an operating parameter deviates from the operating limit specified in Table 1 to this subpart, then you must assume that the emission capture system and add-on control device were achieving zero efficiency during the time period of the deviation. For the purposes of completing the compliance calculations specified in §63.4961, you must treat the materials used during a deviation on a controlled coating operation as if they were used on an uncontrolled coating operation for the time period of the deviation, as indicated in Equation 1 of §63.4961.

(3) Except for solvent recovery systems for which you conduct liquid-liquid material balances according to §63.4961(j), within 5 years following the previous performance test, you must conduct according to the procedures in §§63.4963, 63.4964, and 63.4965 a periodic performance test of each capture system and add-on control device used, and you must establish the operating limits required by §63.4892. You must conduct the first periodic performance test and establish the operating limits required by §63.4892 before March 15, 2022, unless you are already required to complete periodic performance tests as a requirement of renewing your facility's operating permit under 40 CFR part 70 or 40 CFR part 71 and have conducted a performance test on or after March 15, 2017. Thereafter you must conduct a performance test no later

sfrattini on LAPJZKW1R2 with $$_JOB
VerDate Sep<11>2014 09:16 Apr 04, 2023 Jkt 256165 PO 00000 Frm 01061 Fmt 8010 Sfmt 8010 Q:\40\256165.XXX PC31

than 5 years following the previous performance test. Operating limits must be confirmed or reestablished during each performance test.

(d) You must meet the requirements for bypass lines in § 63.4967(b) for controlled coating operations for which you do not conduct liquid-liquid material balances. If any bypass line is opened and emissions are diverted to the atmosphere when the coating operation is running, this is a deviation that must be reported as specified in §§ 63.4910(c)(6) and 63.4920(a)(7). For the purposes of completing the compliance calculations in § 63.4961, you must treat the materials used during a deviation on a controlled coating operation as if they were used on an uncontrolled coating operation for the time period of the deviation, as indicated in Equation 1 of § 63.4961.

(e) You must demonstrate continuous compliance with the work practice standards in § 63.4893. If you did not develop a work practice plan, or you did not implement the plan, or you did not keep the records required by § 63.4930(k)(8), this is a deviation from the work practice standards that must be reported as specified in §§ 63.4910(c)(6) and 63.4920(a)(7).

(f) As part of each semiannual compliance report required in § 63.4920, you must identify the coating operation or group of coating operations for which you used the emission rate with add-on controls option. If there were no deviations from the emission limitations, submit an affirmative statement that you were in compliance with the emission limitations during the reporting period because the organic HAP emission rate for each compliance period was less than or equal to the applicable emission limit in § 63.4890, and you achieved the operating limits required by § 63.4892 and the work practice standards required by § 63.4893 during each compliance period.

(g)–(h) [Reserved]

(i) You must maintain records as specified in §§ 63.4930 and 63.4931.

[68 FR 28619, May 23, 2003, as amended at 71 FR 20466, Apr. 20, 2006; 84 FR 9641, Mar. 15, 2019]

§ 63.4963 What are the general requirements for performance tests?

(a) You must conduct each performance test required by §§ 63.4960 and 63.4962 according to the requirements in this section unless you obtain a waiver of the performance test according to the provisions in § 63.7(h).

(1) *Representative coating operation operating conditions.* You must conduct the performance test under representative operating conditions for the coating operation. Operations during periods of startup, shutdown, or nonoperation do not constitute representative conditions for purposes of conducting a performance test. The owner or operator may not conduct performance tests during periods of malfunction. You must record the process information that is necessary to document operating conditions during the test and explain why the conditions represent normal operation. Upon request, you must make available to the Administrator such records as may be necessary to determine the conditions of performance tests.

(2) *Representative emission capture system and add-on control device operating conditions.* You must conduct the performance test when the emission capture system and add-on control device are operating at a representative flow rate, and the add-on control device is operating at a representative inlet concentration. You must record information that is necessary to document emission capture system and add-on control device operating conditions during the test and explain why the conditions represent normal operation.

(b) You must conduct each performance test of an emission capture system according to the requirements in § 63.4964. You must conduct each performance test of an add-on control device according to the requirements in § 63.4965.

(c) The performance test to determine add-on control device organic HAP destruction or removal efficiency must consist of three runs as specified in § 63.7(e)(3) and each run must last at least 1 hour.

[68 FR 28619, May 23, 2003, as amended at 84 FR 9641, Mar. 15, 2019]

sfrattini on LAPJZKW1R2 with $$_JOB
VerDate Sep<11>2014 09:16 Apr 04, 2023 Jkt 256165 PO 00000 Frm 01062 Fmt 8010 Sfmt 8010 Q:\40\256165.XXX PC31

§ 63.4964 How do I determine the emission capture system efficiency?

You must use the procedures and test methods in this section to determine capture efficiency as part of the performance test required by § 63.4960.

(a) *Assuming 100 percent capture efficiency*. You may assume the capture system efficiency is 100 percent if both of the conditions in paragraphs (a)(1) and (2) of this section are met:

(1) The capture system meets the criteria in Method 204 of appendix M to 40 CFR part 51 for a PTE and directs all the exhaust gases from the enclosure to an add-on control device.

(2) All coatings, thinners, and cleaning materials used in the coating operation are applied within the capture system; coating solvent flash-off and coating, curing, and drying occurs within the capture system; and the removal of or evaporation of cleaning materials from the surfaces they are applied to occurs within the capture system. For example, this criterion is not met if parts enter the open shop environment when being moved between a spray booth and a curing oven.

(b) *Measuring capture efficiency*. If the capture system does not meet both of the criteria in paragraphs (a)(1) and (2) of this section, then you must use one of the three protocols described in paragraphs (c), (d), and (e) of this section to measure capture efficiency. The capture efficiency measurements use TVH capture efficiency as a surrogate for organic HAP capture efficiency. For the protocols in paragraphs (c) and (d) of this section, the capture efficiency measurement must consist of three test runs. Each test run must be at least 3 hours duration or the length of a production run, whichever is longer, up to 8 hours. For the purposes of this test, a production run means the time required for a single part to go from the beginning to the end of production, which includes surface preparation activities and drying or curing time.

(c) *Liquid-to-uncaptured-gas protocol using a temporary total enclosure or building enclosure*. The liquid-to-uncaptured-gas protocol compares the mass of liquid TVH in materials used in the coating operation to the mass of TVH emissions not captured by the emission capture system. Use a temporary total enclosure or a building enclosure and the procedures in paragraphs (c)(1) through (6) of this section to measure emission capture system efficiency using the liquid-to-uncaptured-gas protocol.

(1) Either use a building enclosure or construct an enclosure around the coating operation where coatings, thinners, and cleaning materials are applied, and all areas where emissions from these applied coatings and materials subsequently occur, such as flash-off, curing, and drying areas. The areas of the coating operation where capture devices collect emissions for routing to an add-on control device, such as the entrance and exit areas of an oven or spray booth, must also be inside the enclosure. The enclosure must meet the applicable definition of a temporary total enclosure or building enclosure in Method 204 of appendix M to 40 CFR part 51.

(2) Use Method 204A or 204F of appendix M to 40 CFR part 51 to determine the mass fraction, kg TVH per kg material, of TVH liquid input from each coating, thinner, and cleaning material used in the coating operation during each capture efficiency test run. To make the determination, substitute TVH for each occurrence of the term VOC in the methods.

(3) Use Equation 1 of this section to calculate the mass of TVH liquid input from all the coatings, thinners, and cleaning materials used in the coating operation during each capture efficiency test run:

$$TVH_{used} = \sum_{i=1}^{n} (TVH_i)(Vol_i)(D_i) \qquad \text{(Eq. 1)}$$

Where:

TVH_{used} = Mass of liquid total volatile hydrocarbons in materials used in the coating operation during the capture efficiency test run, lb.

TVH_i = Mass fraction of TVH in coating, thinner, or cleaning material, i, that is used in the coating operation during the capture efficiency test run, kg TVH per kg material.

Vol_i = Total volume of coating, thinner, or cleaning material, i, used in the coating operation during the capture efficiency test run, liters.

sfrattini on LAPJZKW1R2 with $$_JOB
VerDate Sep<11>2014 09:16 Apr 04, 2023 Jkt 256165 PO 00000 Frm 01063 Fmt 8010 Sfmt 8010 Q:\40\256165.XXX PC31
ER23MY03.038<.MATH>

D_i = Density of coating, thinner, or cleaning material, i, kg material per liter material.

n = Number of different coatings, thinners, and cleaning materials used in the coating operation during the capture efficiency test run.

(4) Use Method 204D or E of appendix M to 40 CFR part 51 to measure the total mass of TVH emissions that are not captured by the emission capture system; they are measured as they exit the temporary total enclosure or building enclosure during each capture efficiency test run. To make the measurement, substitute TVH for each occurrence of the term VOC in the methods.

(i) Use Method 204D if the enclosure is a temporary total enclosure.

(ii) Use Method 204E if the enclosure is a building enclosure. During the capture efficiency measurement, all organic compound emitting operations inside the building enclosure, other than the coating operation for which capture efficiency is being determined, must be shut down, but all fans and blowers must be operating normally.

(5) For each capture efficiency test run, determine the percent capture efficiency of the emission capture system, using Equation 2 of this section:

$$CE = \frac{\left(TVH_{used} - TVH_{uncaptured}\right)}{TVH_{used}} \times 100 \qquad \text{(Eq. 2)}$$

Where:

CE = Capture efficiency of the emission capture system vented to the add-on control device, percent.

TVH_{used} = Total mass of TVH liquid input used in the coating operation during the capture efficiency test run, kg.

$TVH_{uncaptured}$ = Total mass of TVH that is not captured by the emission capture system and that exits from the temporary total enclosure or building enclosure during the capture efficiency test run, kg.

(6) Determine the capture efficiency of the emission capture system as the average of the capture efficiencies measured in the three test runs.

(d) *Gas-to-gas protocol using a temporary total enclosure or a building enclosure.* The gas-to-gas protocol compares the mass of TVH emissions captured by the emission capture system to the mass of TVH emissions not captured. Use a temporary total enclosure or a building enclosure and the procedures in paragraphs (d)(1) through (5) of this section to measure emission capture system efficiency using the gas-to-gas protocol.

(1) Either use a building enclosure or construct an enclosure around the coating operation where coatings, thinners, and cleaning materials are applied, and all areas where emissions from these applied coatings and materials subsequently occur, such as flash-off, curing, and drying areas. The areas of the coating operation where capture devices collect emissions generated by the coating operation for routing to an add-on control device, such as the entrance and exit areas of an oven or a spray booth, must also be inside the enclosure. The enclosure must meet the applicable definition of a temporary total enclosure or building enclosure in Method 204 of appendix M to 40 CFR part 51.

(2) Use Method 204B or 204C of appendix M to 40 CFR part 51 to measure the total mass of TVH emissions captured by the emission capture system during each capture efficiency test run as measured at the inlet to the add-on control device. To make the measurement, substitute TVH for each occurrence of the term VOC in the methods.

(i) The sampling points for the Method 204B or 204C measurement must be upstream from the add-on control device and must represent total emissions routed from the capture system and entering the add-on control device.

(ii) If multiple emission streams from the capture system enter the add-on control device without a single common duct, then the emissions entering the add-on control device must be simultaneously measured in each duct and the total emissions entering the

sfrattini on LAPJZKW1R2 with $$_JOB
VerDate Sep<11>2014 09:16 Apr 04, 2023 Jkt 256165 PO 00000 Frm 01064 Fmt 8010 Sfmt 8010 Q:\40\256165.XXX PC31
ER23MY03.039<.MATH>

add-on control device must be determined.

(3) Use Method 204D or 204E of appendix M to 40 CFR part 51 to measure the total mass of TVH emissions that are not captured by the emission capture system; they are measured as they exit the temporary total enclosure or building enclosure during each capture efficiency test run. To make the measurement, substitute TVH for each occurrence of the term VOC in the methods.

(i) Use Method 204D if the enclosure is a temporary total enclosure.

(ii) Use Method 204E if the enclosure is a building enclosure. During the capture efficiency measurement, all organic compound emitting operations inside the building enclosure, other than the coating operation for which capture efficiency is being determined, must be shut down, but all fans and blowers must be operating normally.

(4) For each capture efficiency test run, determine the percent capture efficiency of the emission capture system, using Equation 3 of this section:

$$CE = \frac{TVH_{captured}}{\left(TVH_{captured} + TVH_{uncaptured}\right)} \times 100 \qquad \text{(Eq. 3)}$$

Where:

CE = Capture efficiency of the emission capture system vented to the add-on control device, percent.

$TVH_{captured}$ = Total mass of TVH captured by the emission capture system as measured at the inlet to the add-on control device during the emission capture efficiency test run, kg.

$TVH_{uncaptured}$ = Total mass of TVH that is not captured by the emission capture system and that exits from the temporary total enclosure or building enclosure during the capture efficiency test run, kg.

(5) Determine the capture efficiency of the emission capture system as the average of the capture efficiencies measured in the three test runs.

(e) *Alternative capture efficiency protocol.* As an alternative to the procedures specified in paragraphs (c) and (d) of this section, you may determine capture efficiency using any other capture efficiency protocol and test methods that satisfy the criteria of either the DQO or LCL approach as described in appendix A to subpart KK of this part.

§63.4965 How do I determine the add-on control device emission destruction or removal efficiency?

You must use the procedures and test methods in this section to determine the add-on control device emission destruction or removal efficiency as part of the performance test required by §63.4960. You must conduct three test runs as specified in §63.7(e)(3), and each test run must last at least 1 hour.

(a) For all types of add-on control devices, use the test methods specified in paragraphs (a)(1) through (5) of this section.

(1) Use Method 1 or 1A in appendix A–1 of part 60, as appropriate, to select sampling sites and velocity traverse points.

(2) Use Method 2, 2A, 2C, 2D, 2F in appendix A–1, or Method 2G in appendix A–2, of part 60, as appropriate, to measure gas volumetric flow rate.

(3) Use Method 3, 3A, or 3B in appendix A–2 of part 60, as appropriate, for gas analysis to determine dry molecular weight. You may also use as an alternative to Method 3B, the manual method for measuring the oxygen, carbon dioxide, and carbon monoxide content of exhaust gas in ANSI/ASME PTC 19.10–1981, ''Flue and Exhaust Gas Analyses [Part 10, Instruments and Apparatus]'' (incorporated by reference, *see* §63.14).

(4) Use Method 4 in appendix A–3 of part 60 to determine stack gas moisture.

(5) Methods for determining gas volumetric flow rate, dry molecular weight, and stack gas moisture must be performed, as applicable, during each test run.

(b) Measure total gaseous organic mass emissions as carbon at the inlet and outlet of the add-on control device

sfrattini on LAPJZKW1R2 with $$_JOB
VerDate Sep<11>2014 09:16 Apr 04, 2023 Jkt 256165 PO 00000 Frm 01065 Fmt 8010 Sfmt 8010 Q:\40\256165.XXX PC31
ER23MY03.040<.MATH>

simultaneously, using either Method 25 or 25A in appendix A–7 of part 60, as specified in paragraphs (b)(1) through (3) of this section. You must use the same method for both the inlet and outlet measurements. You may use Method 18 in appendix A–6 of part 60 to subtract methane emissions from measured total gaseous organic mass emissions as carbon.

(1) Use EPA Method 25 to appendix A–7 to part 60 if the add-on control device is an oxidizer and you expect the total gaseous organic concentration as carbon to be more than 50 parts per million (ppm) at the control device outlet.

(2) Use EPA Method 25A to appendix A–7 to part 60 if the add-on control device is an oxidizer and you expect the total gaseous organic concentration as carbon to be 50 ppm or less at the control device outlet.

(3) Use EPA Method 25A to appendix A–7 to part 60 if the add-on control device is not an oxidizer.

(c) If two or more add-on control devices are used for the same emission stream, then you must measure emissions at the outlet of each device. For example, if one add-on control device is a concentrator with an outlet for the high-volume, dilute stream that has been treated by the concentrator, and a second add-on control device is an oxidizer with an outlet for the low-volume, concentrated stream that is treated with the oxidizer, you must measure emissions at the outlet of the oxidizer and the high volume dilute stream outlet of the concentrator.

(d) For each test run, determine the total gaseous organic emissions mass flow rates for the inlet and the outlet of the add-on control device, using Equation 1 of this section. If there is more than one inlet or outlet to the add-on control device, you must calculate the total gaseous organic mass flow rate using Equation 1 of this section for each inlet and each outlet and then total all of the inlet emissions and total all of the outlet emissions.

$$M_f = Q_{sd} C_c (12)(0.0416)\left(10^{-6}\right) \qquad \text{(Eq. 1)}$$

Where:

M_f = Total gaseous organic emissions mass flow rate, kg/per hour (h).

Q_{sd} = Volumetric flow rate of gases entering or exiting the add-on control device, as determined by Method 2, 2A, 2C, 2D, 2F, or 2G, dry standard cubic meters/hour (dscm/h).

C_c = Concentration of organic compounds as carbon in the vent gas, as determined by Method 25 or Method 25A, parts per million by volume (ppmv), dry basis.

0.0416 = Conversion factor for molar volume, kg-moles per cubic meter (mol/m^3) (@ 293 Kelvin (K) and 760 millimeters of mercury (mmHg)).

(e) For each test run, determine the add-on control device organic emissions destruction or removal efficiency, using Equation 2 of this section:

$$DRE = \frac{M_{fi} - M_{fo}}{M_{fi}} \qquad \text{(Eq. 2)}$$

Where:

DRE = Organic emissions destruction or removal efficiency of the add-on control device, percent.

M_{fi} = Total gaseous organic emissions mass flow rate at the inlet(s) to the add-on control device, using Equation 1 of this section, kg/h.

M_{fo} = Total gaseous organic emissions mass flow rate at the outlet(s) of the add-on control device, using Equation 1 of this section, kg/h.

(f) Determine the emission destruction or removal efficiency of the add-on control device as the average of the efficiencies determined in the three test runs and calculated in Equation 2 of this section.

[68 FR 28619, May 23, 2003, as amended at 84 FR 9641, Mar. 15, 2019; 85 FR 41161, July 8, 2020]

§ 63.4966 How do I establish the emission capture system and add-on control device operating limits during performance tests?

During the performance tests required by §§ 63.4960 and 63.4962, and described in §§ 63.4963, 63.4964, and 63.4965, you must establish the operating limits required by § 63.4892 according to this section, unless you have received approval for alternative monitoring and operating limits under § 63.8(f) as specified in § 63.4892.

sfrattini on LAPJZKW1R2 with $$_JOB
VerDate Sep<11>2014 09:16 Apr 04, 2023 Jkt 256165 PO 00000 Frm 01066 Fmt 8010 Sfmt 8010 Q:\40\256165.XXX PC31
ER23MY03.041<MATH> ER23MY03.042<MATH>

(a) *Thermal oxidizers.* If your add-on control device is a thermal oxidizer, establish the operating limits according to paragraphs (a)(1) and (2) of this section.

(1) During the performance test, you must monitor and record the combustion temperature at least once every 15 minutes during each of the three test runs. You must monitor the temperature in the firebox of the thermal oxidizer or immediately downstream of the firebox before any substantial heat exchange occurs.

(2) Use the data collected during the performance test to calculate and record the average combustion temperature maintained during the performance test. This average combustion temperature is the minimum operating limit for your thermal oxidizer.

(b) *Catalytic oxidizers.* If your add-on control device is a catalytic oxidizer, establish the operating limits according to either paragraphs (b)(1) and (2) or paragraphs (b)(3) and (4) of this section.

(1) During the performance test, you must monitor and record the temperature just before the catalyst bed and the temperature difference across the catalyst bed at least once every 15 minutes during each of the three test runs.

(2) Use the data collected during the performance test to calculate and record the average temperature just before the catalyst bed and the average temperature difference across the catalyst bed maintained during the performance test. These are the minimum operating limits for your catalytic oxidizer.

(3) As an alternative to monitoring the temperature difference across the catalyst bed, you may monitor the temperature at the inlet to the catalyst bed and implement a site-specific inspection and maintenance plan for your catalytic oxidizer as specified in paragraph (b)(4) of this section. During the performance test, you must monitor and record the temperature just before the catalyst bed at least once every 15 minutes during each of the three test runs. Use the data collected during the performance test to calculate and record the average temperature just before the catalyst bed during the performance test. This is the minimum operating limit for your catalytic oxidizer.

(4) You must develop and implement an inspection and maintenance plan for your catalytic oxidizer(s) for which you elect to monitor according to paragraph (b)(3) of this section. The plan must address, at a minimum, the elements specified in paragraphs (b)(4)(i) through (iii) of this section.

(i) Annual sampling and analysis of the catalyst activity (*i.e.*, conversion efficiency) following the manufacturer's or catalyst supplier's recommended procedures.

(ii) Monthly inspection of the oxidizer system, including the burner assembly and fuel supply lines for problems and, as necessary, adjust the equipment to assure proper air-to-fuel mixtures.

(iii) Annual internal and monthly external visual inspection of the catalyst bed to check for channeling, abrasion, and settling. If problems are found, you must replace the catalyst bed or take corrective action consistent with the manufacturer's recommendations and conduct a new performance test to determine destruction efficiency according to § 63.4965.

(c) *Carbon adsorbers.* If your add-on control device is a carbon adsorber, establish the operating limits according to paragraphs (c)(1) and (2) of this section.

(1) You must monitor and record the total regeneration desorbing gas (*e.g.*, steam or nitrogen) mass flow for each regeneration cycle, and the carbon bed temperature after each carbon bed regeneration and cooling cycle, for the regeneration cycle either immediately preceding or immediately following the performance test.

(2) The operating limits for your carbon adsorber are the minimum total desorbing gas mass flow recorded during the regeneration cycle and the maximum carbon bed temperature recorded after the cooling cycle.

(d) *Condensers.* If your add-on control device is a condenser, establish the operating limits according to paragraphs (d)(1) and (2) of this section.

(1) During the performance test, you must monitor and record the condenser outlet (product side) gas temperature

sfrattini on LAPJZKW1R2 with $$_JOB
VerDate Sep<11>2014 09:16 Apr 04, 2023 Jkt 256165 PO 00000 Frm 01067 Fmt 8010 Sfmt 8010 Q:\40\256165.XXX PC31

at least once every 15 minutes during each of the three test runs.

(2) Use the data collected during the performance test to calculate and record the average condenser outlet (product side) gas temperature maintained during the performance test. This average condenser outlet gas temperature is the maximum operating limit for your condenser.

(e) *Emission capture system.* For each capture device that is not part of a PTE that meets the criteria of § 63.4964(a), establish an operating limit for either the gas volumetric flow rate or duct static pressure, as specified in paragraphs (e)(1) and (2) of this section. The operating limit for a PTE is specified in Table 1 to this subpart.

(1) During the capture efficiency determination required by §§ 63.4960 and 63.4962, and described in §§ 63.4963 and 63.4964, you must monitor and record either the gas volumetric flow rate or the duct static pressure for each separate capture device in your emission capture system at least once every 15 minutes during each of the three test runs at a point in the duct between the capture device and the add-on control device inlet.

(2) Calculate and record the average gas volumetric flow rate or duct static pressure for the three test runs for each capture device. This average gas volumetric flow rate or duct static pressure is the minimum operating limit for that specific capture device.

(f) *Concentrators.* If your add-on control device includes a concentrator, you must establish operating limits for the concentrator according to paragraphs (f)(1) through (4) of this section.

(1) During the performance test, you must monitor and record the desorption concentrate stream gas temperature at least once every 15 minutes during each of the three runs of the performance test.

(2) Use the data collected during the performance test to calculate and record the average temperature. This is the minimum operating limit for the desorption concentrate gas stream temperature.

(3) During the performance test, you must monitor and record the pressure drop of the dilute stream across the concentrator at least once every 15 minutes during each of the three runs of the performance test.

(4) Use the data collected during the performance test to calculate and record the average pressure drop. This is the maximum operating limit for the dilute stream across the concentrator.

(g) *Bioreactors.* If you are using a bioreactor, you must comply with the provisions for the use of an alternative monitoring method as set forth in 40 CFR 63.8(f).

[68 FR 28619, May 23, 2003, as amended at 84 FR 9641, Mar. 15, 2019]

§ 63.4967 What are the requirements for continuous parameter monitoring system installation, operation, and maintenance?

(a) *General.* You must install, operate, and maintain each CPMS specified in paragraphs (c), (e), and (f) of this section according to paragraphs (a)(1) through (6) of this section. You must install, operate, and maintain each CPMS specified in paragraphs (b) and (d) of this section according to paragraphs (a)(3) through (5) of this section.

(1) The CPMS must complete a minimum of one cycle of operation for each successive 15-minute period. You must have a minimum of four equally spaced successive cycles of CPMS operation in 1 hour.

(2) You must determine the average of all recorded readings for each 3-hour period of the emission capture system and add-on control device operation.

(3) You must record the results of each inspection, calibration, and validation check of the CPMS.

(4) You must maintain the CPMS at all times in accordance with § 63.4900(b) and have readily available necessary parts for routine repairs of the monitoring equipment.

(5) Before September 12, 2019, you must operate the CPMS and collect emission capture system and add-on control device parameter data at all times that a controlled coating operation is operating, except during monitoring malfunctions, repairs to correct the monitor malfunctions, and required quality assurance or control activities (including, if applicable, calibration checks and required zero and span adjustments). On and after September 12, 2019, you must operate the CPMS and

sfrattini on LAPJZKW1R2 with $$_JOB
VerDate Sep<11>2014 09:16 Apr 04, 2023 Jkt 256165 PO 00000 Frm 01068 Fmt 8010 Sfmt 8010 Q:\40\256165.XXX PC31

collect emission capture system and add-on control device parameter data at all times in accordance with § 63.4900(b).

(6) You must not use emission capture system or add-on control device parameter data recorded during monitoring malfunctions, repairs to correct the monitor malfunctions, out-of-control periods, or required quality assurance or control activities when calculating data averages. You must use all the data collected during all other periods in calculating the data averages for determining compliance with the emission capture system and add-on control device operating limits.

(7) A monitoring malfunction is any sudden, infrequent, not reasonably preventable failure of the CPMS to provide valid data. Monitoring failures that are caused in part by poor maintenance or careless operation are not malfunctions. Any period for which the monitoring system is out-of-control and data are not available for required calculations is a deviation from the monitoring requirements.

(b) *Capture system bypass line.* You must meet the requirements of paragraphs (b)(1) and (2) of this section for each emission capture system that contains bypass lines that could divert emissions away from the add-on control device to the atmosphere.

(1) You must monitor or secure the valve or closure mechanism controlling the bypass line in a nondiverting position in such a way that the valve or closure mechanism cannot be opened without creating a record that the valve was opened. The method used to monitor or secure the valve or closure mechanism must meet one of the requirements specified in paragraphs (b)(1)(i) through (iv) of this section.

(i) *Flow control position indicator.* Install, calibrate, maintain, and operate according to the manufacturer's specifications a flow control position indicator that takes a reading at least once every 15 minutes and provides a record indicating whether the emissions are directed to the add-on control device or diverted from the add-on control device. The time of occurrence and flow control position must be recorded, as well as every time the flow direction is changed. The flow control position indicator must be installed at the entrance to any bypass line that could divert the emissions away from the add-on control device to the atmosphere.

(ii) *Car-seal or lock-and-key valve closures.* Secure any bypass line valve in the closed position with a car-seal or a lock-and-key type configuration. You must visually inspect the seal or closure mechanism at least once every month to ensure that the valve is maintained in the closed position, and the emissions are not diverted away from the add-on control device to the atmosphere.

(iii) *Valve closure monitoring.* Ensure that any bypass line valve is in the closed (nondiverting) position through monitoring of valve position at least once every 15 minutes. You must inspect the monitoring system at least once every month to verify that the monitor will indicate valve position.

(iv) *Automatic shutdown system.* Use an automatic shutdown system in which the coating operation is stopped when flow is diverted by the bypass line away from the add-on control device to the atmosphere when the coating operation is running. You must inspect the automatic shutdown system at least once every month to verify that it will detect diversions of flow and shut down the coating operation.

(2) If any bypass line is opened, you must include a description of why the bypass line was opened and the length of time it remained open in the semiannual compliance reports required in § 63.4920.

(c) *Thermal oxidizers and catalytic oxidizers.* If you are using a thermal oxidizer or catalytic oxidizer as an add-on control device (including those used with concentrators or with carbon adsorbers to treat desorbed concentrate streams), you must comply with the requirements in paragraphs (c)(1) through (3) of this section:

(1) For a thermal oxidizer, install a gas temperature monitor in the firebox of the thermal oxidizer or in the duct immediately downstream of the firebox before any substantial heat exchange occurs.

(2) For a catalytic oxidizer, install a gas temperature monitor in the gas

sfrattini on LAPJZKW1R2 with $$_JOB
VerDate Sep<11>2014 09:16 Apr 04, 2023 Jkt 256165 PO 00000 Frm 01069 Fmt 8010 Sfmt 8010 Q:\40\256165.XXX PC31

stream immediately before the catalyst bed, and if you are establishing operating limits according to § 63.4966(b)(1) and (2), also install a gas temperature monitor in the gas stream immediately after the catalyst bed.

(3) For each gas temperature monitoring device, you must meet the requirements in paragraphs (a) and (c)(3)(i) through (vi) of this section for each gas temperature monitoring device. For the purposes of this paragraph (c)(3), a thermocouple is part of the temperature sensor.

(i) Locate the temperature sensor in a position that provides a representative temperature.

(ii) Use a temperature sensor with an accuracy of at least 5 degrees Fahrenheit or 1.0 percent of the temperature value, whichever is larger.

(iii) Perform an initial calibration according to the manufacturer's requirements.

(iv) Before using the sensor for the first time or upon relocation or replacement of the sensor, perform a validation check by comparing the sensor output to a calibrated temperature measurement device or by comparing the sensor output to a simulated temperature.

(v) Conduct an accuracy audit every quarter and after every 24 hour excursion. Accuracy audit methods include comparisons of sensor output to redundant temperature sensors, to calibrated temperature measurement devices, or to temperature simulation devices.

(vi) Conduct a visual inspection of each sensor every quarter if redundant temperature sensors are not used.

(d) *Carbon adsorbers.* If you are using a carbon adsorber as an add-on control device, you must monitor the total regeneration desorbing gas (*e.g.*, steam or nitrogen) mass flow for each regeneration cycle, the carbon bed temperature after each regeneration and cooling cycle, and comply with paragraphs (a)(3) through (5) and (d)(1) through (3) of this section.

(1) The regeneration desorbing gas mass flow monitor must be an integrating device having a measurement sensitivity of plus or minus 10 percent, capable of recording the total regeneration desorbing gas mass flow for each regeneration cycle.

(2) The carbon bed temperature monitor must be capable of recording the temperature within 15 minutes of completing any carbon bed cooling cycle.

(3) For all carbon adsorbers, you must meet the requirements in paragraphs (c)(3)(i) through (vi) of this section for each gas temperature monitoring device.

(e) *Condensers.* If you are using a condenser, you must monitor the condenser outlet (product side) gas temperature and comply with paragraphs (a) and (e)(1) and (2) of this section.

(1) The temperature monitor must provide a gas temperature record at least once every 15 minutes.

(2) For all condensers, you must meet the requirements in paragraphs (c)(3)(i) through (vi) of this section for each gas temperature monitoring device.

(f) *Emission capture systems.* The capture system monitoring system must comply with the applicable requirements in paragraphs (f)(1) and (2) of this section.

(1) For each flow measurement device, you must meet the requirements in paragraphs (a) and (f)(1)(i) through (vii) of this section.

(i) Locate a flow sensor in a position that provides a representative flow measurement in the duct from each capture device in the emission capture system to the add-on control device.

(ii) Use a flow sensor with an accuracy of at least 10 percent of the flow.

(iii) Perform an initial sensor calibration in accordance with the manufacturer's requirements.

(iv) Perform a validation check before initial use or upon relocation or replacement of a sensor. Validation checks include comparison of sensor values with electronic signal simulations or via relative accuracy testing.

(v) Perform accuracy audits every quarter and after every 24 hour excursion. Accuracy audits include comparison of sensor values with electronic signal simulations or with values obtained via relative accuracy testing.

(vi) Perform leak checks monthly.

(vii) Perform visual inspections of the sensor system quarterly if there is no redundant sensor.

(2) For each pressure drop measurement device, you must comply with the

sfrattini on LAPJZKW1R2 with $$_JOB
VerDate Sep<11>2014 09:16 Apr 04, 2023 Jkt 256165 PO 00000 Frm 01070 Fmt 8010 Sfmt 8010 Q:\40\256165.XXX PC31

requirements in paragraphs (a) and (f)(2)(i) through (vii) of this section.

(i) Locate the pressure sensor(s) in or as close to a position that provides a representative measurement of the pressure drop across each opening you are monitoring.

(ii) Use a pressure sensor with an accuracy of at least 0.5 inches of water column or 5 percent of the measured value, whichever is larger.

(iii) Perform an initial calibration of the sensor according to the manufacturer's requirements.

(iv) Conduct a validation check before initial operation or upon relocation or replacement of the sensor. Validation checks include comparison of the sensor values to calibrated pressure measurement devices or to pressure simulation using calibrated pressure sources.

(v) Conduct accuracy audits every quarter and after every 24 hour excursion. Accuracy audits include comparison of sensor values to calibrated pressure measurement devices or to pressure simulation using calibrated pressure sources.

(vi) Perform monthly leak checks on pressure connections. A pressure of at least 1.0 inches of water column to the connection must yield a stable sensor result for at least 15 seconds.

(vii) Perform a visual inspection of the sensor at least monthly if there is no redundant sensor.

(g) *Concentrators*. If you are using a concentrator, such as a zeolite wheel or rotary carbon bed concentrator, you must comply with the requirements in paragraphs (a) and (g)(1) and (2) of this section.

(1) You must install a temperature monitor in the desorption gas stream. The temperature monitor must meet the requirements in paragraphs (a) and (c)(3) of this section.

(2) You must install a device to monitor pressure drop across the zeolite wheel or rotary carbon bed. The pressure monitoring device must meet the requirements in paragraphs (a) and (f)(2) of this section.

[68 FR 28619, May 23, 2003, as amended at 84 FR 9642, Mar. 15, 2019]

OTHER REQUIREMENTS AND INFORMATION

§ 63.4980 Who implements and enforces this subpart?

(a) This subpart can be implemented and enforced by us, the U.S. Environmental Protection Agency (EPA), or a delegated authority such as your State, local, or tribal agency. If the Administrator has delegated authority to your State, local, or tribal agency, then that agency (as well as EPA) has the authority to implement and enforce this subpart. You should contact your EPA Regional Office to find out if implementation and enforcement of this subpart is delegated to your State, local, or tribal agency.

(b) In delegating implementation and enforcement authority of this subpart to a State, local, or tribal agency under subpart E of this part, the authorities contained in paragraph (c) of this section are retained by the Administrator and are not transferred to the State, local, or tribal agency.

(c) The authorities that will not be delegated to State, local, or tribal agencies are listed in paragraphs (c)(1) through (4) of this section:

(1) Approval of alternatives to the work practice standards in § 63.4893 under § 63.6(g).

(2) Approval of major alternatives to test methods under § 63.7(e)(2)(ii) and (f), and as defined in § 63.90.

(3) Approval of major alternatives to monitoring under § 63.8(f) and as defined in § 63.90.

(4) Approval of major alternatives to recordkeeping and reporting under § 63.10(f) and as defined in § 63.90.

§ 63.4981 What definitions apply to this subpart?

Terms used in this subpart are defined in the CAA, in 40 CFR 63.2, and in this section as follows:

Add-on control means an air pollution control device such as a thermal oxidizer or carbon adsorber that reduces pollution in an air stream by destruction or removal before discharge to the atmosphere.

Adhesive means any chemical substance that is applied for the purpose of bonding two surfaces together.

Capture device means a hood, enclosure, room, floor sweep, or other means

sfrattini on LAPJZKW1R2 with $$_JOB
VerDate Sep<11>2014 09:16 Apr 04, 2023 Jkt 256165 PO 00000 Frm 01071 Fmt 8010 Sfmt 8010 Q:\40\256165.XXX PC31

of containing or collecting emissions and directing those emissions into an add-on air pollution control device.

Capture efficiency or *capture system efficiency* means the portion (expressed as a percentage) of the pollutants from an emission source that is delivered to an add-on control device.

Capture system means one or more capture devices intended to collect emissions generated by a coating operation in the use of coatings or cleaning materials, both at the point of application and at subsequent points where emissions from the coatings and cleaning materials occur, such as flashoff, drying, or curing. As used in this subpart, multiple capture devices that collect emissions generated by a coating operation are considered a single capture system.

Cleaning material means a solvent used to remove contaminants and other materials, such as dirt, grease, oil, and dried or wet coating (*e.g.*, depainting), from a substrate before or after coating application or from equipment associated with a coating operation, such as spray booths, spray guns, racks, tanks, and hangers. Thus, it includes any cleaning material used on substrates or equipment or both.

Coating means a material applied to a substrate for decorative, protective, or functional purposes. Such materials include, but are not limited to, paints, sealants, caulks, inks, adhesives, and maskants. Decorative, protective, or functional materials that consist only of protective oils for metal, acids, bases, or any combination of these substances are not considered coatings for the purposes of this subpart.

Coating operation means equipment used to apply cleaning materials to a substrate to prepare it for coating application or to remove dried or wet coating (surface preparation); to apply coating to a substrate (coating application) and to dry or cure the coating after application; and to clean coating operation equipment (equipment cleaning). A single coating operation may include any combination of these types of equipment, but always includes at least the point at which a coating or cleaning material is applied and all subsequent points in the affected source where organic HAP emissions from that coating or cleaning material occur. There may be multiple coating operations in an affected source. Coating application with hand-held nonrefillable aerosol containers, touchup markers, or marking pens is not a coating operation for the purposes of this subpart.

Coating solids means the nonvolatile portion of the coating that makes up the dry film.

Continuous parameter monitoring system (CPMS) means the total equipment that may be required to meet the data acquisition and availability requirements of this subpart, used to sample, condition (if applicable), analyze, and provide a record of coating operation, or capture system, or add-on control device parameters.

Controlled coating operation means a coating operation from which some or all of the organic HAP emissions are routed through an emission capture system and add-on control device.

Deviation means:

(1) Before September 12, 2019, any instance in which an affected source subject to this subpart or an owner or operator of such a source:

(i) Fails to meet any requirement or obligation established by this subpart including but not limited to any emission limit, or operating limit, or work practice standard;

(ii) Fails to meet any term or condition that is adopted to implement an applicable requirement in this subpart and that is included in the operating permit for any affected source required to obtain such a permit; or

(iii) Fails to meet any emission limit, or operating limit, or work practice standard in this subpart during startup, shutdown, or malfunction regardless of whether or not such failure is permitted by this subpart; and

(2) On and after September 12, 2019, any instance in which an affected source subject to this subpart or an owner or operator of such a source:

(i) Fails to meet any requirement or obligation established by this subpart including but not limited to any emission limit, or operating limit, or work practice standard; or

(ii) Fails to meet any term or condition that is adopted to implement an applicable requirement in this subpart

sfrattini on LAPJZKW1R2 with $$_JOB
VerDate Sep<11>2014 09:16 Apr 04, 2023 Jkt 256165 PO 00000 Frm 01072 Fmt 8010 Sfmt 8010 Q:\40\256165.XXX PC31

and that is included in the operating permit for any affected source required to obtain such a permit.

Emission limitation means an emission limit, operating limit, or work practice standard.

Enclosure means a structure that surrounds a source of emissions and captures and directs the emissions to an add-on control device.

Exempt compound means a specific compound that is not considered a VOC due to negligible photochemical reactivity. The exempt compounds are listed in 40 CFR 51.100(s).

Facility maintenance means the routine repair or renovation (including surface coating) of the tools, equipment, machinery, and structures that comprise the infrastructure of the affected facility and that are necessary for the facility to function in its intended capacity.

Manufacturer's formulation data means data on a material (such as a coating) that are supplied by the material manufacturer based on knowledge of the ingredients used to manufacture that material, rather than based on testing of the material with the test methods specified in §63.4941(a)(1) through (3). Manufacturer's formulation data may include, but are not limited to, information on density, organic HAP content, volatile organic matter content, and coating solids content.

Mass fraction of coating solids means the ratio of the mass of coating solids to the mass of a coating in which it is contained, expressed as kg of coating solids per kg of coating.

Mass fraction of organic HAP means the ratio of the mass of organic HAP to the mass of a material in which it is contained, expressed as kg of organic HAP per kg of material.

Month means a calendar month or a pre-specified period of 28 days to 35 days to allow for flexibility in recordkeeping when data are based on a business accounting period.

Organic HAP content means the mass of organic HAP per volume of coating solids for a coating, calculated using Equation 2 of §63.4941. The organic HAP content is determined for the coating in the condition it is in when received from its manufacturer or supplier and does not account for any alteration after receipt.

Permanent total enclosure (PTE) means a permanently installed enclosure that meets the criteria of Method 204 of appendix M, 40 CFR part 51, for a PTE and that directs all the exhaust gases from the enclosure to an add-on control device.

Protective oil means an organic material that is applied to metal for the purpose of providing lubrication or protection from corrosion without forming a solid film. This definition of protective oil includes, but is not limited to, lubricating oils, evaporative oils (including those that evaporate completely), and extrusion oils.

Research or laboratory facility means a facility whose primary purpose is for research and development of new processes and products, that is conducted under the close supervision of technically trained personnel, and is not engaged in the manufacture of final or intermediate products for commercial purposes, except in a *de minimis* manner.

Responsible official means responsible official as defined in 40 CFR 70.2.

Startup, initial means the first time equipment is brought online in a facility.

Surface preparation means use of a cleaning material on a portion of or all of a substrate. This includes use of a cleaning material to remove dried coating, which is sometimes called ''depainting'' or ''paint stripping,'' for the purpose of preparing a substrate for coating application.

Temporary total enclosure means an enclosure constructed for the purpose of measuring the capture efficiency of pollutants emitted from a given source as defined in Method 204 of appendix M, 40 CFR part 51.

Thinner means an organic solvent that is added to a coating after the coating is received from the supplier.

Total volatile hydrocarbon (TVH) means the total amount of nonaqueous volatile organic matter determined according to Methods 204 and 204A through 204F of appendix M to 40 CFR part 51 and substituting the term TVH each place in the methods where the term VOC is used. The TVH includes both VOC and non-VOC.

sfrattini on LAPJZKW1R2 with $$_JOB
VerDate Sep<11>2014 09:16 Apr 04, 2023 Jkt 256165 PO 00000 Frm 01073 Fmt 8010 Sfmt 8010 Q:\40\256165.XXX PC31

Uncontrolled coating operation means a coating operation from which none of the organic HAP emissions are routed through an emission capture system and add-on control device.

Volatile organic compound (VOC) means any compound defined as VOC in 40 CFR 51.100(s).

Volume fraction of coating solids means the ratio of the volume of coating solids (also known as volume of nonvolatiles) to the volume of coating, expressed as liters of coating solids per liter of coating.

Wastewater means water that is generated in a coating operation and is collected, stored, or treated prior to being discarded or discharged.

[68 FR 28619, May 23, 2003, as amended at 84 FR 9642, Mar. 15, 2019]

TABLE 1 TO SUBPART RRRR OF PART 63—OPERATING LIMITS IF USING THE EMISSION RATE WITH ADD-ON CONTROLS OPTION

If you are required to comply with operating limits by § 63.4892, you must comply with the applicable operating limits in the following table:

For the following device . . .	you must meet the following operating limit . . .	and you must demonstrate continuous compliance with the operating limit by . . .
1. thermal oxidizer	a. the average combustion temperature in any 3-hour period must not fall below the combustion temperature limit established according to § 63.4966(a).	i. collecting the combustion temperature data according to § 63.4967(c); ii. reducing the data to 3-hour block averages; and iii. maintaining the 3-hour average combustion temperature at or above the temperature limit.
2. catalytic oxidizer	a. the average temperature measured just before the catalyst bed in any 3-hour period must not fall below the limit established according to § 63.4966(b); and either	i. collecting the temperature data according to § 63.4967(c); ii. reducing the data to 3-hour block averages; and iii. maintaining the 3-hour average temperature before the catalyst bed at or above the temperature limit.
	b. ensure that the average temperature difference across the catalyst bed in any 3-hour period does not fall below the temperature difference limit established according to § 63.4966(b), or	i. collecting the temperature data according to § 63.4967(c); ii. reducing the data to 3-hour block averages; and iii. maintaining the 3-hour average temperature difference at or above the temperature difference limit.
	c. develop and implement an inspection and maintenance plan according to § 63.4966(b)(3) and (4).	i. maintaining an up-to-date inspection and maintenance plan, records of annual catalyst activity checks, records of monthly inspections of the oxidizer system, and records of the annual internal inspections of the catalyst bed. If a problem is discovered during a monthly or annual inspection required by § 63.4966(b)(4), you must take corrective action as soon as practicable consistent with the manufacturer's recommendations.
3. carbon adsorber	a. the total regeneration desorbing gas (*e.g.,* steam or nitrogen) mass flow for each carbon bed regeneration cycle must not fall below the total regeneration desorbing gas mass flow limit established according to § 63.4966(c).	i. measuring the total regeneration desorbing gas (*e.g.,* steam or nitrogen) mass flow for each regeneration cycle according § 63.4967(d); and ii. maintaining the total regeneration desorbing gas mass flow at or above the mass flow limit.
	b. the temperature of the carbon bed after completing each regeneration and any cooling cycle must not exceed the carbon bed temperature limit established according to § 63.4966(c).	i. measuring the temperature of the carbon bed after completing each regeneration and any cooling cycle according to § 63.4967(d); and ii. operating the carbon beds such that each carbon bed is not returned to service until completing each regeneration and any cooling cycle until the recorded temperature of the carbon bed is at or below the temperature limit.

sfrattini on LAPJZKW1R2 with $$_JOB
VerDate Sep<11>2014 09:16 Apr 04, 2023 Jkt 256165 PO 00000 Frm 01074 Fmt 8010 Sfmt 8002 Q:\40\256165.XXX PC31

For the following device . . .	you must meet the following operating limit . . .	and you must demonstrate continuous compliance with the operating limit by . . .
4. condenser	a. the average condenser outlet (product side) gas temperature in any 3-hour period must not exceed the temperature limit established according to § 63.4966(d).	i. collecting the condenser outlet (product side) gas temperature according to § 63.4967(e); ii. reducing the data to 3-hour block averages; and iii. maintaining the 3-hour average gas temperature at the outlet at or below the temperature limit.
5. emission capture system that is a PTE according to § 63.4964(a).	a. the direction of the air flow at all times must be into the enclosure; and either	i. collecting the direction of air flow, and either the facial velocity of air through all natural draft openings according to § 63.4967(f)(1) or the pressure drop across the enclosure according to § 63.4967(f)(2); and ii. maintaining the facial velocity of air flow through all natural draft openings or the pressure drop at or above the facial velocity limit or pressure drop limit, and maintaining the direction of air flow into the enclosure at all times.
	b. the average facial velocity of air through all natural draft openings in the enclosure must be at least 200 feet per minute; or	i. collecting the direction of air flow, and either the facial velocity of air through all natural draft openings according to § 63.4967(f)(1) or the pressure drop across the enclosure according to § 63.4967(f)(2); and ii. maintaining the facial velocity of air flow through all natural draft openings or the pressure drop at or above the facial velocity limit or pressure drop limit, and maintaining the direction of air flow into the enclosure at all times.
	c. the pressure drop across the enclosure must be at least 0.007 inch H_2O, as established in Method 204 of appendix M to 40 CFR part 51.	i. collecting the direction of air flow, and either the facial velocity of air through all natural draft openings according to § 63.4967(f)(1) or the pressure drop across the enclosure according to § 63.4967(f)(2); and ii. maintaining the facial velocity of air flow through all natural draft openings or the pressure drop at or above the facial velocity limit or pressure drop limit, and maintaining the direction of air flow into the enclosure at all times.
6. emission capture system that is not a PTE according to § 63.4964(a).	a. the average gas volumetric flow rate or duct static pressure in each duct between a capture device and add-on control device inlet in any 3-hour period must not fall below the average volumetric flow rate or duct static pressure limit established for that capture device according to § 63.4966(e).	i. collecting the gas volumetric flow rate or duct static pressure for each capture device according to § 63.4967(f); ii. reducing the data to 3-hour block averages; and iii. maintaining the 3-hour average gas volumetric flow rate or duct static pressure for each capture device at or above the gas volumetric flow rate or duct static pressure limit.
7. concentrators, including zeolite wheels and rotary carbon adsorbers.	a. the average gas temperature of the desorption concentrate stream in any 3-hour period must not fall below the limit established according to § 63.4966(f).	i. collecting the temperature data according to § 63.4967(g); ii. reducing the data to 3-hour block averages; and iii. maintaining the 3-hour average temperature at or above the temperature limit.
	b. the average pressure drop of the dilute stream across the concentrator in any 3-hour period must not fall below the limit established according to § 63.4966(f).	i. collecting the pressure drop data according to § 63.4967(g); ii. reducing the pressure drop data to 3-hour block averages; and iii. maintaining the 3-hour average pressure drop at or above the pressure drop
8. bioreactor systems	a. the use of an alternative monitoring method as set forth in § 63.8(f)	

TABLE 2 TO SUBPART RRRR OF PART 63—APPLICABILITY OF GENERAL PROVISIONS TO SUBPART RRRR

[You must comply with the applicable General Provisions requirements according to the following table:]

Citation	Subject	Applicable to subpart	Explanation
§ 63.1(a)(1)–(12)	General Applicability	Yes.	
§ 63.1(b)(1)–(3)	Initial Applicability Determination.	Yes	Applicability to subpart RRRR is also specified in § 63.4881.

sfrattini on LAPJZKW1R2 with $$_JOB
VerDate Sep<11>2014 09:16 Apr 04, 2023 Jkt 256165 PO 00000 Frm 01075 Fmt 8010 Sfmt 8002 Q:\40\256165.XXX PC31

[You must comply with the applicable General Provisions requirements according to the following table:]

Citation	Subject	Applicable to subpart	Explanation
§ 63.1(c)(1)	Applicability After Standard Established.	Yes.	
§ 63.1(c)(2)–(3)	Applicability of Permit Program for Area Sources.	No	Area sources are not subject to subpart RRRR.
§ 63.1(c)(4)–(5)	Extensions and Notifications	Yes.	
§ 63.1(c)(6)	Reclassification	Yes.	
§ 63.1(e)	Applicability of Permit Program Before Relevant Standard is Set.	Yes.	
§ 63.2	Definitions	Yes	Additional definitions are specified in § 63.4981.
§ 63.3(a)–(c)	Units and Abbreviations	Yes.	
§ 63.4(a)(1)–(5)	Prohibited Activities	Yes.	
§ 63.4(b)–(c)	Circumvention/Severability	Yes.	
§ 63.5(a)	Construction/Reconstruction	Yes.	
§ 63.5(b)(1)–(6)	Requirements for Existing, Newly Constructed, and Reconstructed Sources.	Yes.	
§ 63.5(d)	Application for Approval of Construction/Reconstruction.	Yes.	
§ 63.5(e)	Approval of Construction/Reconstruction.	Yes.	
§ 63.5(f)	Approval of Construction/Reconstruction Based on Prior State Review.	Yes.	
§ 63.6(a)	Compliance With Standards and Maintenance Requirements—Applicability.	Yes.	
§ 63.6(b)(1)–(7)	Compliance Dates for New and Reconstructed Sources.	Yes	Section 63.4883 specifies the compliance dates.
§ 63.6(c)(1)–(5)	Compliance Dates for Existing Sources.	Yes	Section 63.4883 specifies the compliance dates.
§ 63.6(e)(1)(i)	Operation and Maintenance	Yes, before September 12, 2019. No, on and after September 12, 2019.	*See* § 63.4900(b) for general duty requirement.
§ 63.6(e)(1)(ii)	Operation and Maintenance	Yes, before September 12, 2019. No, on and after September 12, 2019.	
§ 63.6(e)(1)(iii)	Operation and Maintenance	Yes.	
§ 63.6(e)(3)	Startup, shutdown, and malfunction Plan (SSMP).	Yes, before September 12, 2019. No, on and after September 12, 2019.	
§ 63.6(f)(1)	Compliance Except During Startup, Shutdown, and Malfunction.	Yes, before September 12, 2019. No, on and after September 12, 2019.	
§ 63.6(f)(2)–(3)	Methods for Determining Compliance.	Yes.	
§ 63.6(g)(1)–(3)	Use of Alternative Standards	Yes.	
§ 63.6(h)	Compliance With Opacity/Visible Emission Standards.	No	Subpart RRRR does not establish opacity standards and does not require continuous opacity monitoring systems (COMS).
§ 63.6(i)(1)–(16)	Extension of Compliance	Yes.	
§ 63.6(j)	Presidential Compliance Exemption.	Yes.	
§ 63.7(a)(1)	Performance Test Requirements—Applicability.	Yes	Applies to all affected sources using an add-on control device to comply with the standards. Additional requirements for performance testing are specified in §§ 63.4963, 63.4964, and 63.4965.

sfrattini on LAPJZKW1R2 with $$_JOB
VerDate Sep<11>2014 09:16 Apr 04, 2023 Jkt 256165 PO 00000 Frm 01076 Fmt 8010 Sfmt 8002 Q:\40\256165.XXX PC31

[You must comply with the applicable General Provisions requirements according to the following table:]

Citation	Subject	Applicable to subpart	Explanation
§ 63.7(a)(2)	Performance Test Requirements—Dates.	Yes	Applies only to performance tests for capture system and control device efficiency at sources using these to comply with the standards. Section 63.4960 specifies the schedule for performance test requirements that are earlier than those specified in § 63.7(a)(2).
§ 63.7(a)(3)	Performance Tests Required by the Administrator.	Yes.	
§ 63.7(b)–(d)	Performance Test Requirements—Notification, Quality Assurance, Facilities Necessary Safe Testing, Conditions During Test.	Yes	Applies only to performance tests for capture system and add-on control device efficiency at sources using these to comply with the standards.
§ 63.7(e)(1)	Conduct of performance tests	Yes, before September 12, 2019. No, on and after September 12, 2019.	*See* § 63.4963(a).
§ 63.7(e)(2)–(4)	Conduct of performance tests	Yes..	
§ 63.7(f)	Performance Test Requirements—Use of Alternative Test Method.	Yes	Applies to all test methods except those used to determine capture system efficiency.
§ 63.7(g)–(h)	Performance Test Requirements—Data Analysis, Recordkeeping, Reporting, Waiver of Test.	Yes	Applies only to performance tests for capture system and add-on control device efficiency at sources using these to comply with the standards.
§ 63.8(a)(1)–(3)	Monitoring Requirements—Applicability.	Yes	Applies only to monitoring of capture system and add-on control device efficiency at sources using these to comply with the standards. Additional requirements for monitoring are specified in § 63.4967.
§ 63.8(a)(4)	Additional Monitoring Requirements.	No	Subpart RRRR does not have monitoring requirements for flares.
§ 63.8(b)	Conduct of Monitoring	Yes.	
§ 63.8(c)(1)	Continuous Monitoring Systems (CMS) Operation and Maintenance.	Yes, before September 12, 2019. No, on and after September 12, 2019.	
§ 63.8(c)(2)–(3)	CMS Operation and Maintenance.	Yes	Applies only to monitoring of capture system and add-on control device efficiency at sources using these to comply with the standards. Additional requirements for CMS operations and maintenance are specified in § 63.4967.
§ 63.8(c)(4)	CMS	No	Section 63.4967 specifies the requirements for the operation of CMS for capture systems and add-on control devices at sources using these to comply.
§ 63.8(c)(5)	COMS	No	Subpart RRRR does not have opacity or visible emissions standards.

sfrattini on LAPJZKW1R2 with $$_JOB
VerDate Sep<11>2014 09:16 Apr 04, 2023 Jkt 256165 PO 00000 Frm 01077 Fmt 8010 Sfmt 8002 Q:\40\256165.XXX PC31

[You must comply with the applicable General Provisions requirements according to the following table:]

Citation	Subject	Applicable to subpart	Explanation
§ 63.8(c)(6)	CMS Requirements	No	Section 63.4967 specifies the requirements for monitoring systems for capture systems and add-on control devices at sources using these to comply.
§ 63.8(c)(7)	CMS Out-of-Control Periods	Yes.	
§ 63.8(c)(8)	CMS Out-of-Control Periods Reporting.	No	Section 63.4920 requires reporting of CMS out-of-control periods.
§ 63.8(d)–(e)	Quality Control Program and CMS Performance Evaluation.	No	Subpart RRRR does not require the use of CEMS.
§ 63.8(f)(1)–(5)	Use of an Alternative Monitoring Method.	Yes..	
§ 63.8(f)(6)	Alternative to Relative Accuracy Test.	No	Subpart RRRR does not require the use of CEMS.
§ 63.8(g)(1)–(5)	Data Reduction	No	Sections 63.4966 and 63.4967 specify monitoring data reduction.
§ 63.9(a)–(d)	Notification Requirements	Yes.	
§ 63.9(e)	Notification of Performance Test.	Yes	Applies only to capture system and add-on control device performance tests at sources using these to comply with the standards.
§ 63.9(f)	Notification of Visible Emissions/Opacity Test.	No	Subpart RRRR does not have opacity or visible emission standards.
§ 63.9(g)(1)–(3)	Additional Notifications When Using CMS.	No	Subpart RRRR does not require the use of CEMS.
§ 63.9(h)	Notification of Compliance Status.	Yes	Section 63.4910 specifies the dates for submitting the notification of compliance status.
§ 63.9(i)	Adjustment of Submittal Deadlines.	Yes.	
§ 63.9(j)	Change in Previous Information.	Yes.	
§ 63.9(k)	Electronic reporting procedures.	Yes	Only as specified in § 63.9(j).
§ 63.10(a)	Recordkeeping/Reporting—Applicability and General Information.	Yes.	
§ 63.10(b)(1)	General Recordkeeping Requirements.	Yes	Additional requirements are specified in §§ 63.4930 and 63.4931.
§ 63.10(b)(2)(i)	Recordkeeping of Occurrence and Duration of Startups and Shutdowns.	Yes, before September 12, 2019. No, on and after September 12, 2019.	*See* § 63.4930(j).
§ 63.10(b)(2)(ii)	Recordkeeping of Failures to Meet Standards.	Yes, before September 12, 2019. No, on and after September 12, 2019.	*See* § 63.4930(j).
§ 63.10(b)(2)(iii)	Recordkeeping Relevant to Maintenance of Air Pollution Control and Monitoring Equipment.	Yes.	
§ 63.10(b)(2)(iv)– (v)	Actions Taken to Minimize Emissions During SSM.	Yes, before September 12, 2019.. No, on and after September 12, 2019.	*See* § 63.4930(j)(4) for a record of actions taken to minimize emissions during a deviation from the standard.
§ 63.10(b)(2)(vi)	Recordkeeping for CMS malfunctions.	Yes, before September 12, 2019. No, on and after September 12, 2019.	*See* § 63.4930(j) for records of periods of deviation from the standard, including instances where a CMS is inoperative or out-of-control.
§ 63.10(b)(2)(vii)–(xi)	Records	Yes.	
§ 63.10(b)(2)(xii)	Records	Yes.	

sfrattini on LAPJZKW1R2 with $$_JOB
VerDate Sep<11>2014 09:16 Apr 04, 2023 Jkt 256165 PO 00000 Frm 01078 Fmt 8010 Sfmt 8002 Q:\40\256165.XXX PC31

[You must comply with the applicable General Provisions requirements according to the following table:]

Citation	Subject	Applicable to subpart	Explanation
§ 63.10(b)(2)(xiii)		No	Subpart RRRR does not require the use of CEMS.
§ 63.10(b)(2)(xiv)		Yes.	
§ 63.10(b)(3)	Recordkeeping Requirements for Applicability Determinations.	Yes.	
§ 63.10(c)(1)–(6)	Additional Recordkeeping Requirements for Sources with CMS.	Yes.	
§ 63.10(c)(7)–(8)	Additional Recordkeeping Requirements for Sources with CMS.	No	*See* § 63.4930(j)(1) for records of periods of deviation from the standard, including instances where a CMS is inoperative or out-of-control.
§ 63.10(c)(10)–(14)	Additional Recordkeeping Requirements for Sources with CMS.	Yes.	
§ 63.10(c)(15)	Records Regarding the SSMP	Yes, before September 12, 2019. No, on and after September 12, 2019.	
§ 63.10(d)(1)	General Reporting Requirements.	Yes	Additional requirements are specified in § 63.4920.
§ 63.10(d)(2)	Report of Performance Test Results.	Yes	Additional requirements are specified in § 63.4920(b).
§ 63.10(d)(3)	Reporting Opacity or Visible Emissions Observations.	No	Subpart RRRR does not require opacity or visible emissions observations.
§ 63.10(d)(4)	Progress Reports for Sources With Compliance Extensions.	Yes.	
§ 63.10(d)(5)	Startup, Shutdown, and Malfunction Reports.	Yes, before September 12, 2019. No, on and after September 12, 2019.	*See* § 63.4920(a)(7).
§ 63.10(e)(1)–(2)	Additional CMS Reports	No	Subpart RRRR does not require the use of CEMS.
§ 63.10(e)(3)	Excess Emissions/CMS Performance Reports.	No	Section 63.4920(a) specifies the contents of periodic compliance reports.
§ 63.10(e)(4)	COMS Data Reports	No	Subpart RRRR does not specify requirements for opacity or COMS.
§ 63.10(f)	Recordkeeping/Reporting Waiver.	Yes.	
§ 63.11	Control Device Requirements/Flares.	No	Subpart RRRR does not specify use of flares for compliance.
§ 63.12	State Authority and Delegations.	Yes.	
§ 63.13	Addresses	Yes.	
§ 63.14	Incorporation by Reference	Yes.	
§ 63.15	Availability of Information/Confidentiality.	Yes	

[84 FR 9642, Mar. 15, 2019, as amended at 85 FR 73908, Nov. 19, 2020]

Table 3 to Subpart RRRR of Part 63—Default Organic HAP Mass Fraction for Solvents and Solvent Blends

You may use the mass fraction values in the following table for solvent blends for which you do not have test data or manufacturer's formulation data:

Solvent/Solvent blend	CAS. No.	Average organic HAP mass fraction	Typical organic HAP, percent by mass
1. Toluene	108–88–3	1.0	Toluene.
2. Xylene(s)	1330–20–7	1.0	Xylenes, ethylbenzene.
3. Hexane	110–54–3	0.5	n-hexane.

sfrattini on LAPJZKW1R2 with $$_JOB
VerDate Sep<11>2014 09:16 Apr 04, 2023 Jkt 256165 PO 00000 Frm 01079 Fmt 8010 Sfmt 8002 Q:\40\256165.XXX PC31

Solvent/Solvent blend	CAS. No.	Average organic HAP mass fraction	Typical organic HAP, percent by mass
4. n-Hexane	110–54–3	1.0	n-hexane.
5. Ethylbenzene	100–41–4	1.0	Ethylbenzene.
6. Aliphatic 140	.....	0	None.
7. Aromatic 100	.....	0.02	1% xylene, 1% cumene.
8. Aromatic 150	.....	0.09	Naphthalene.
9. Aromatic naphtha	64742–95–6	0.02	1% xylene, 1% cumene.
10. Aromatic solvent	64742–94–5	0.1	Naphthalene.
11. Exempt mineral spirits	8032–32–4	0	None.
12. Ligroines (VM & P)	8032–32–4	0	None.
13. Lactol spirits	64742–89–6	0.15	Toluene.
14. Low aromatic white spirit	64742–82–1	0	None.
15. Mineral spirits	64742–88–7	0.01	Xylenes.
16. Hydrotreated naphtha	64742–48–9	0	None.
17. Hydrotreated light distillate	64742–47–8	0.001	Toluene.
18. Stoddard solvent	8052–41–3	0.01	Xylenes.
19. Super high-flash naphtha	64742–95–6	0.05	Xylenes.
20. Varsol® solvent	8052–49–3	0.01	0.5% xylenes, 0.5% ethyl benzene.
21. VM & P naphtha	64742–89–8	0.06	3% toluene, 3% xylene.
22. Petroleum distillate mixture	68477–31–6	0.08	4% naphthalene, 4% biphenyl.

Table 4 to Subpart RRRR of Part 63—Default Organic HAP Mass Fraction for Petroleum Solvent Groups [1]

You May Use the Mass Fraction Values in the Following Fable for Solvent Blends for Which You Do Not Have Test Data or Manufacturer's Formulation Data:

Solvent type	Average organic HAP mass fraction	Typical organic percent HAP, by mass
Aliphatic [2]	0.03	1% Xylene, 1% Toluene, and 1% Ethylbenzene.
Aromatic [3]	0.06	4% Xylene, 1% Toluene, and 1% Ethylbenzene.

[1] Use this table only if the solvent blend does not match any of the solvent blends in Table 3 to this subpart and you only know whether the blend is aliphatic or aromatic.
[2] E.g., Mineral Spirits 135, Mineral Spirits 150 EC, Naphtha, Mixed Hydrocarbon, Aliphatic Hydrocarbon, Aliphatic Naphtha, Naphthol Spirits, Petroleum Spirits, Petroleum Oil, Petroleum Naphtha, Solvent Naphtha, Solvent Blend.
[3] E.g., Medium-flash Naphtha, High-flash Naphtha, Aromatic Naphtha, Light Aromatic Naphtha, Light Aromatic Hydrocarbons, Aromatic Hydrocarbons, Light Aromatic Solvent.

Table 5 to Subpart RRRR of Part 63—List of Hazardous Air Pollutants That Must Be Counted Toward Total Organic HAP Content if Present at 0.1 Percent or More by Mass

Chemical name	CAS No.
1,1,2,2-Tetrachloroethane	79–34–5
1,1,2-Trichloroethane	79–00–5
1,1-Dimethylhydrazine	57–14–7
1,2-Dibromo-3-chloropropane	96–12–8
1,2-Diphenylhydrazine	122–66–7
1,3-Butadiene	106–99–0
1,3-Dichloropropene	542–75–6
1,4-Dioxane	123–91–1
2,4,6-Trichlorophenol	88–06–2
2,4/2,6-Dinitrotoluene (mixture)	25321–14–6
2,4-Dinitrotoluene	121–14–2
2,4-Toluene diamine	95–80–7
2-Nitropropane	79–46–9
3,3'-Dichlorobenzidine	91–94–1
3,3'-Dimethoxybenzidine	119–90–4
3,3'-Dimethylbenzidine	119–93–7
4,4'-Methylene bis(2-chloroaniline)	101–14–4
Acetaldehyde	75–07–0
Acrylamide	79–06–1
Acrylonitrile	107–13–1
Allyl chloride	107–05–1
alpha-Hexachlorocyclohexane (a-HCH)	319–84–6
Aniline	62–53–3
Benzene	71–43–2
Benzidine	92–87–5
Benzotrichloride	98–07–7
Benzyl chloride	100–44–7
beta-Hexachlorocyclohexane (b-HCH)	319–85–7
Bis(2-ethylhexyl)phthalate	117–81–7
Bis(chloromethyl)ether	542–88–1
Bromoform	75–25–2
Captan	133–06–2
Carbon tetrachloride	56–23–5
Chlordane	57–74–9
Chlorobenzilate	510–15–6
Chloroform	67–66–3
Chloroprene	126–99–8
Cresols (mixed)	1319–77–3
DDE	3547–04–4
Dichloroethyl ether	111–44–4
Dichlorvos	62–73–7
Epichlorohydrin	106–89–8
Ethyl acrylate	140–88–5
Ethylene dibromide	106–93–4
Ethylene dichloride	107–06–2
Ethylene oxide	75–21–8
Ethylene thiourea	96–45–7
Ethylidene dichloride (1,1-Dichloroethane)	75–34–3
Formaldehyde	50–00–0

sfrattini on LAPJZKW1R2 with $$_JOB
VerDate Sep<11>2014 09:16 Apr 04, 2023 Jkt 256165 PO 00000 Frm 01080 Fmt 8010 Sfmt 8002 Q:\40\256165.XXX PC31

Chemical name	CAS No.
Heptachlor	76–44–8
Hexachlorobenzene	118–74–1
Hexachlorobutadiene	87–68–3
Hexachloroethane	67–72–1
Hydrazine	302–01–2
Isophorone	78–59–1
Lindane (hexachlorocyclohexane, all isomers)	58–89–9
m-Cresol	108–39–4
Methylene chloride	75–09–2
Naphthalene	91–20–3
Nitrobenzene	98–95–3
Nitrosodimethylamine	62–75–9
o-Cresol	95–48–7
o-Toluidine	95–53–4
Parathion	56–38–2
p-Cresol	106–44–5
p-Dichlorobenzene	106–46–7
Pentachloronitrobenzene	82–68–8
Pentachlorophenol	87–86–5
Propoxur	114–26–1
Propylene dichloride	78–87–5
Propylene oxide	75–56–9
Quinoline	91–22–5
Tetrachloroethene	127–18–4
Toxaphene	8001–35–2
Trichloroethylene	79–01–6
Trifluralin	1582–09–8
Vinyl bromide	593–60–2
Vinyl chloride	75–01–4
Vinylidene chloride	75–35–4

[84 FR 9645, Mar. 15, 2019]

Subpart SSSS—National Emission Standards for Hazardous Air Pollutants: Surface Coating of Metal Coil

SOURCE: 67 FR 39812, June 10, 2002, unless otherwise noted.

WHAT THIS SUBPART COVERS

§ 63.5080 What is in this subpart?

This subpart describes the actions you must take to reduce emissions of hazardous air pollutants (HAP) if you own or operate a facility that performs metal coil surface coating operations and is a major source of HAP. This subpart establishes emission standards and states what you must do to comply. Certain requirements apply to all who must comply with the subpart; others depend on the means you use to comply with an emission standard.

§ 63.5090 Does this subpart apply to me?

(a) The provisions of this subpart apply to each facility that is a major source of HAP, as defined in § 63.2, at which a coil coating line is operated, except as provided in paragraphs (b) and (e) of this section.

(b) This subpart does not apply to any coil coating line that meets the criteria of paragraph (b)(1) or (2) of this section.

(1) A coil coating line that is part of research or laboratory equipment.

(2) A coil coating line on which at least 85 percent of the metal coil coated, based on surface area, is less than 0.15 millimeter (0.006 inch) thick, except as provided in paragraph (c) of this section.

(c) If you operate a coating line subject to subpart JJJJ of this part that also meets the criteria in either paragraph (c)(1) or (2) of this section, and you choose to comply with the requirements of this subpart, then such compliance constitutes compliance with subpart JJJJ. The coating line for which you choose this option is, therefore, included in the affected source for this subpart as defined in § 63.5110 and shall not be included in the affected source for subpart JJJJ as defined in § 63.3300.

(1) The coating line is used to coat metal coil of thicknesses both less than and greater than or equal to 0.15 millimeter (0.006 inch) thick, regardless of the percentage of surface area of each thickness coated.

(2) The coating line is used to coat only metal coil that is less than 0.15 millimeter (0.006 inch) thick and the coating line is controlled by a common control device that also receives organic HAP emissions from a coil coating line that is subject to the requirements of this subpart.

(d) Each coil coating line that does not comply with the provisions of this subpart because it meets the criteria in paragraph (b)(2) of this section, that for any rolling 12-month period fails to meet the criteria in paragraph (b)(2) would from that point forward become subject to the provisions of this subpart. After becoming subject to the provisions of this subpart, the coil coating line would no longer be eligible to use the criteria of paragraph (b)(2) of this section, even if in subsequent 12-month periods at least 85 percent of the metal coil coated, based on surface area, is less than 0.15 millimeter (0.006 inch) thick.

sfrattini on LAPJZKW1R2 with $$_JOB
VerDate Sep<11>2014 09:16 Apr 04, 2023 Jkt 256165 PO 00000 Frm 01081 Fmt 8010 Sfmt 8010 Q:\40\256165.XXX PC31

(e) This subpart does not apply to the application of incidental markings (including letters, numbers, or symbols) that are added to bare metal coils and that are used for only product identification or for product inventory control. The application of letters, numbers, or symbols to a coated metal coil is considered a coil coating process and part of the coil coating affected source.

[67 FR 39812, June 10, 2002, as amended at 85 FR 10861, Feb. 25, 2020]

§ 63.5100 Which of my emissions sources are affected by this subpart?

The affected source subject to this subpart is the collection of all of the coil coating lines at your facility.

§ 63.5110 What special definitions are used in this subpart?

All terms used in this subpart that are not defined in this section have the meaning given to them in the Clean Air Act (CAA) and in subpart A of this part.

Always-controlled work station means a work station associated with a curing oven from which the curing oven exhaust is delivered to a control device with no provision for the oven exhaust to bypass the control device. Sampling lines for analyzers and relief valves needed for safety purposes are not considered bypass lines.

Capture efficiency means the fraction of all organic HAP emissions generated by a process that is delivered to a control device, expressed as a percentage.

Capture system means a hood, enclosed room, or other means of collecting organic HAP emissions and conveying them to a control device.

Car-seal means a seal that is placed on a device that is used to change the position of a valve or damper (e.g., from open to closed) in such a way that the position of the valve or damper cannot be changed without breaking the seal.

Coating means material applied onto or impregnated into a substrate for decorative, protective, or functional purposes. Such materials include, but are not limited to, paints, varnishes, sealants, inks, adhesives, maskants, and temporary coatings. Decorative, protective, or functional materials that consist only of solvents, protective oils, acids, bases, or any combination of these substances are not considered coatings for the purposes of this subpart.

Coating material means the coating and other products (e.g., a catalyst and resin in multi-component coatings) combined to make a single material at the coating facility that is applied to metal coil. For the purposes of this subpart, an organic solvent that is used to thin a coating prior to application to the metal coil is considered a coating material.

Coil coating line means a process and the collection of equipment used to apply an organic coating to the surface of metal coil. A coil coating line includes a web unwind or feed section, a series of one or more work stations, any associated curing oven, wet section, and quench station. A coil coating line does not include ancillary operations such as mixing/thinning, cleaning, wastewater treatment, and storage of coating material.

Control device means a device such as a solvent recovery device or oxidizer which reduces the organic HAP in an exhaust gas by recovery or by destruction.

Control device efficiency means the ratio of organic HAP emissions recovered or destroyed by a control device to the total organic HAP emissions that are introduced into the control device, expressed as a percentage.

Curing oven means the device that uses heat or radiation to dry or cure the coating material applied to the metal coil.

Day means a 24-consecutive-hour period.

Deviation, before August 24, 2020, means any instance in which an affected source, subject to this subpart, or an owner or operator of such a source:

(1) Fails to meet any requirement or obligation established by this subpart including, but not limited to, any emission limitation (including any operating limit) or work practice standard; or

(2) Fails to meet any term or condition that is adopted to implement an applicable requirement in this subpart and that is included in the operating

sfrattini on LAPJZKW1R2 with $$_JOB
VerDate Sep<11>2014 09:16 Apr 04, 2023 Jkt 256165 PO 00000 Frm 01082 Fmt 8010 Sfmt 8010 Q:\40\256165.XXX PC31

permit for any affected source required to obtain such a permit; or

(3) Fails to meet any emission limitation (including any operating limit) or work practice standard in this subpart during start-up, shutdown, or malfunction, regardless of whether or not such failure is permitted by this subpart.

Deviation, on and after August 24, 2020, means any instance in which an affected source, subject to this subpart, or an owner or operator of such a source:

(1) Fails to meet any requirement or obligation established by this subpart including, but not limited to, any emission limitation (including any operating limit) or work practice standard; or

(2) Fails to meet any term or condition that is adopted to implement an applicable requirement in this subpart and that is included in the operating permit for any affected source required to obtain such a permit.

Existing affected source means an affected source the construction of which commenced on or before July 18, 2000, and it has not subsequently undergone reconstruction as defined in §63.2.

Facility means all contiguous or adjoining property that is under common ownership or control, including properties that are separated only by a road or other public right-of-way.

Flexible packaging means any package or part of a package the shape of which can be readily changed. Flexible packaging includes but is not limited to bags, pouches, labels, liners and wraps utilizing paper, plastic, film, aluminum foil, metalized or coated paper or film, or any combination of these materials.

HAP applied means the organic HAP content of all coating materials applied to a substrate by a coil coating line.

Intermittently-controllable work station means a work station associated with a curing oven with provisions for the curing oven exhaust to be delivered to a control device or diverted from a control device through a bypass line, depending on the position of a valve or damper. Sampling lines for analyzers and relief valves needed for safety purposes are not considered bypass lines.

Metal coil means a continuous metal strip that is at least 0.15 millimeter (0.006 inch) thick, which is packaged in a roll or coil prior to coating. After coating, it may or may not be rewound into a roll or coil. Metal coil does not include metal webs that are coated for use in flexible packaging.

Month means a calendar month or a pre-specified period of 28 days to 35 days to allow for flexibility in recordkeeping when data are based on a business accounting period.

Never-controlled work station means a work station which is not equipped with provisions by which any emissions, including those in the exhaust from any associated curing oven, may be delivered to a control device.

New affected source means an affected source the construction or reconstruction of which commenced after July 18, 2000.

Overall organic HAP control efficiency means the total efficiency of a control system, determined either by:

(1) The product of the capture efficiency as determined in accordance with the requirements of §63.5160(e) and the control device efficiency as determined in accordance with the requirements of §63.5160(a)(1)(i) and (ii) or §63.5160(d); or

(2) A liquid-liquid material balance in accordance with the requirements of §63.5170(e)(1).

Permanent total enclosure (PTE) means a permanently installed enclosure that meets the criteria of Method 204 of appendix M, 40 CFR part 51 for a PTE, and that directs all the exhaust gases from the enclosure to a control device.

Protective oil means an organic material that is applied to metal for the purpose of providing lubrication or protection from corrosion without forming a solid film. This definition of protective oil includes but is not limited to lubricating oils, evaporative oils (including those that evaporate completely), and extrusion oils.

Research or laboratory equipment means any equipment for which the primary purpose is to conduct research and development into new processes and products, where such equipment is operated under the close supervision of technically trained personnel and is not engaged in the manufacture of

sfrattini on LAPJZKW1R2 with $$_JOB
VerDate Sep<11>2014 09:16 Apr 04, 2023 Jkt 256165 PO 00000 Frm 01083 Fmt 8010 Sfmt 8010 Q:\40\256165.XXX PC31

products for commercial sale in commerce, except in a de minimis manner.

Temporary total enclosure (TTE) means an enclosure constructed for the purpose of measuring the capture efficiency of pollutants emitted from a given source, as defined in Method 204 of 40 CFR part 51, appendix M.

Work station means a unit on a coil coating line where coating material is deposited onto the metal coil substrate.

[67 FR 39812, June 10, 2002, as amended at 85 FR 10861, Feb. 25, 2020]

EMISSION STANDARDS AND COMPLIANCE DATES

§ 63.5120 What emission standards must I meet?

(a) Each coil coating affected source must limit organic HAP emissions to the level specified in paragraph (a)(1), (2), or (3) of this section:

(1) No more than 2 percent of the organic HAP applied for each month during each 12-month compliance period (98 percent reduction); or

(2) No more than 0.046 kilogram (kg) of organic HAP per liter of solids applied during each 12-month compliance period; or

(3) If you use an oxidizer to control organic HAP emissions, operate the oxidizer such that an outlet organic HAP concentration of no greater than 20 parts per million by volume (ppmv) on a dry basis is achieved and the efficiency of the capture system is 100 percent.

(b) You must demonstrate compliance with one of these standards by following the applicable procedures in § 63.5170.

§ 63.5121 What operating limits must I meet?

(a) Except as provided in paragraph (b) of this section, for any coil coating line for which you use an add-on control device, unless you use a solvent recovery system and conduct a liquid-liquid material balance according to § 63.5170(e)(1), you must meet the applicable operating limits specified in Table 1 to this subpart. You must establish the operating limits during performance tests according to the requirements in § 63.5160(d)(3) and Table 1 to § 63.5160. You must meet the operating limits established during the most recent performance test required in § 63.5160 at all times after you establish them.

(b) If you use an add-on control device other than those listed in Table 1 to this subpart, or wish to monitor an alternative parameter and comply with a different operating limit, you must apply to the Administrator for approval of alternative monitoring under § 63.8(f).

[67 FR 39812, June 10, 2002, as amended at 85 FR 10862, Feb. 25, 2020]

§ 63.5130 When must I comply?

(a) For an existing affected source, the compliance date is June 10, 2005.

(b) If you own or operate a new affected source subject to the provisions of this subpart, you must comply immediately upon start-up of the affected source, or by June 10, 2002, whichever is later.

(c) Affected sources which have undergone reconstruction are subject to the requirements for new affected sources.

(d) The initial compliance period begins on the applicable compliance date specified in paragraph (a) or (b) of this section and ends on the last day of the 12th month following the compliance date. If the compliance date falls on any day other than the first day of a month, then the initial compliance period extends through that month plus the next 12 months.

(e) For the purpose of demonstrating continuous compliance, a compliance period consists of 12 months. Each month after the end of the initial compliance period described in paragraph (d) of this section is the end of a compliance period consisting of that month and the preceding 11 months.

[67 FR 39812, June 10, 2002, as amended at 85 FR 10862, Feb. 25, 2020]

sfrattini on LAPJZKW1R2 with $$_JOB
VerDate Sep<11>2014 09:16 Apr 04, 2023 Jkt 256165 PO 00000 Frm 01084 Fmt 8010 Sfmt 8010 Q:\40\256165.XXX PC31

GENERAL REQUIREMENTS FOR COMPLIANCE WITH THE EMISSION STANDARDS AND FOR MONITORING AND PERFORMANCE TESTS

§ 63.5140 What general requirements must I meet to comply with the standards?

(a) Before August 24, 2020, you must be in compliance with the applicable emission standards in § 63.5120 and the operating limits in Table 1 to this subpart at all times, except during periods of start-up, shutdown, and malfunction of any capture system and control device used to comply with this subpart. On and after August 24, 2020 you must be in compliance with the applicable emission standards in § 63.5120 and the operating limits in Table 1 to this subpart at all times. If you are complying with the emission standards of this subpart without the use of a capture system and control device, you must be in compliance with the standards at all times.

(b) Before August 24, 2020, you must always operate and maintain your affected source, including air pollution control and monitoring equipment, according to the provisions in § 63.6(e)(1). On and after August 24, 2020, at all times, you must operate and maintain your affected source, including associated air pollution control equipment and monitoring equipment, in a manner consistent with safety and good air pollution control practices for minimizing emissions. The general duty to minimize emissions does not require the owner or operator to make any further efforts to reduce emissions if levels required by the applicable standard have been achieved. Determination of whether a source is operating in compliance with operation and maintenance requirements will be based on information available to the Administrator that may include, but is not limited to, monitoring results, review of operation and maintenance procedures, review of operation and maintenance records, and inspection of the affected source.

(c) Table 2 of this subpart provides cross references to subpart A of this part, indicating the applicability of the General Provisions requirements to this subpart.

[67 FR 39812, June 10, 2002, as amended at 85 FR 10862, Feb. 25, 2020]

§ 63.5150 If I use a control device to comply with the emission standards, what monitoring must I do?

TABLE 1 TO § 63.5150—CONTROL DEVICE MONITORING REQUIREMENTS INDEX

If you operate a coil coating line and have the following:	Then you must:
1. Control device	Monitor control device operating parameters (§ 63.5150(a)(3)).
2. Capture system	Monitor capture system operating parameters (§ 63.5150(a)(4)).
3. Intermittently controllable work station	Monitor parameters related to possible exhaust flow through any bypass to a control device (§ 63.5150(a)(1)).
4. Continuous emission monitors	Operate continuous emission monitors and perform a quarterly audit (§ 63.5150(a)(2)).

(a) To demonstrate continuing compliance with the standards, you must monitor and inspect each capture system and each control device required to comply with § 63.5120 following the date on which the initial performance test of the capture system and control device is completed. You must install and operate the monitoring equipment as specified in paragraphs (a)(1) through (4) of this section. On and after August 24, 2020, you must also maintain the monitoring equipment at all times in accordance with § 63.5140(b) and keep the necessary parts readily available for routine repairs of the monitoring equipment.

(1) *Bypass monitoring*. If you operate coil coating lines with intermittently-controllable work stations, you must follow at least one of the procedures in paragraphs (a)(1)(i) through (iv) of this section for each curing oven associated with these work stations to monitor

sfrattini on LAPJZKW1R2 with $$_JOB
VerDate Sep<11>2014 09:16 Apr 04, 2023 Jkt 256165 PO 00000 Frm 01085 Fmt 8010 Sfmt 8010 Q:\40\256165.XXX PC31

for potential bypass of the control device:

(i) *Flow control position indicator*. Install, calibrate, maintain, and operate according to the manufacturer's specifications a flow control position indicator that provides a record indicating whether the exhaust stream from the curing oven is directed to the control device or is diverted from the control device. The time and flow control position must be recorded at least once per hour, as well as every time the flow direction is changed. The flow control position indicator must be installed at the entrance to any bypass line that could divert the exhaust stream away from the control device to the atmosphere.

(ii) *Car-seal or lock-and-key valve closures*. Secure any bypass line valve in the closed position with a car-seal or a lock-and-key type configuration when the control device is in operation; a visual inspection of the seal or closure mechanism will be performed at least once every month to ensure that the valve or damper is maintained in the closed position, and the exhaust stream is not diverted through the bypass line.

(iii) *Valve closure continuous monitoring*. Ensure that any bypass line valve or damper is in the closed position through continuous monitoring of valve position when the control device is in operation. The monitoring system must be inspected at least once every month to verify that the monitor will indicate valve position.

(iv) *Automatic shutdown system*. Use an automatic shutdown system in which the coil coating line is stopped when flow is diverted away from the control device to any bypass line when the control device is in operation. The automatic shutdown system must be inspected at least once every month to verify that it will detect diversions of flow and shut down operations.

(2) *Continuous emission monitoring system (CEMS)*. If you are demonstrating continuous compliance with the standards in § 63.5120(a)(1) or (2) through continuous emission monitoring of a control device, you must install, calibrate, operate, and maintain continuous emission monitors to measure the total organic volatile matter concentration at both the control device inlet and outlet, and you must continuously monitor flow rate. If you are demonstrating continuous compliance with the outlet organic HAP concentration limit in § 63.5120(a)(3), you must install, calibrate, operate, and maintain a continuous emission monitor to measure the total organic volatile matter concentration at the control device outlet.

(i) All CEMS must comply with performance specification 8 or 9 of 40 CFR part 60, appendix B, as appropriate for the detection principle you choose. The requirements of 40 CFR part 60, procedure 1, appendix F must also be followed. In conducting the quarterly audits of the monitors as required by procedure 1, appendix F, you must use compounds representative of the gaseous emission stream being controlled.

(ii) As specified in § 63.8(c)(4)(ii), each CEMS and each flow rate monitor must complete a minimum of one cycle of operation (sampling, analyzing, and data recording) for each successive 15-minute period. Information which must be determined for recordkeeping purposes, as required by § 63.5190(a)(1)(i) includes:

(A) The hourly average of all recorded readings;

(B) The daily average of all recorded readings for each operating day; and

(C) The monthly average for each month during the semiannual reporting period.

(3) *Temperature monitoring of oxidizers*. If you are complying with the requirements of the standards in § 63.5120 through the use of an oxidizer and demonstrating continuous compliance through monitoring of an oxidizer operating parameter, you must comply with paragraphs (a)(3)(i) through (iii) of this section.

(i) Install, calibrate, maintain, and operate temperature monitoring equipment according to manufacturer's specifications. The calibration of the chart recorder, data logger, or temperature indicator must be verified every 3 months; or the chart recorder, data logger, or temperature indicator must be replaced. You must replace the equipment either if you choose not to perform the calibration, or if the

sfrattini on LAPJZKW1R2 with $$_JOB
VerDate Sep<11>2014 09:16 Apr 04, 2023 Jkt 256165 PO 00000 Frm 01086 Fmt 8010 Sfmt 8010 Q:\40\256165.XXX PC31

equipment cannot be calibrated properly. Each temperature monitoring device must be equipped with a continuous recorder. The device must have an accuracy of ±1 percent of the temperature being monitored in degrees Celsius, or ±1 °Celsius, whichever is greater.

(ii) For an oxidizer other than a catalytic oxidizer, to demonstrate continuous compliance with the operating limit established according to §63.5160(d)(3)(i), you must install the thermocouple or temperature sensor in the combustion chamber at a location in the combustion zone.

(iii) For a catalytic oxidizer, if you are demonstrating continuous compliance with the operating limit established according to §63.5160(d)(3)(ii)(A) and (B), then you must install the thermocouples or temperature sensors in the vent stream at the nearest feasible point to the inlet and outlet of the catalyst bed. Calculate the temperature difference across the catalyst. If you are demonstrating continuous compliance with the operating limit established according to §63.5160(d)(3)(ii)(C) and (D), then you must install the thermocouple or temperature sensor in the vent stream at the nearest feasible point to the inlet of the catalyst bed.

(4) *Capture system monitoring*. If you are complying with the requirements of the standards in §63.5120 through the use of a capture system and control device, you must develop a capture system monitoring plan containing the information specified in paragraphs (a)(4)(i) and (ii) of this section. You must monitor the capture system in accordance with paragraph (a)(4)(iii) of this section. You must make the monitoring plan available for inspection by the permitting authority upon request.

(i) The monitoring plan must identify the operating parameter to be monitored to ensure that the capture efficiency measured during compliance tests is maintained, explain why this parameter is appropriate for demonstrating ongoing compliance, and identify the specific monitoring procedures.

(ii) The plan also must specify operating limits at the capture system operating parameter value, or range of values, that demonstrates compliance with the standards in §63.5120. The operating limits must represent the conditions indicative of proper operation and maintenance of the capture system.

(iii) You must conduct monitoring in accordance with the plan.

(b) If an operating parameter monitored in accordance with paragraphs (a)(3) and (4) of this section is out of the allowed range specified in Table 1 to this subpart it will be considered a deviation from the operating limit.

[67 FR 39812, June 10, 2002, as amended at 85 FR 10862, Feb. 25, 2020]

§63.5160 What performance tests must I complete?

TABLE 1 TO §63.5160—REQUIRED PERFORMANCE TESTING SUMMARY

If you control HAP on your coil coating line by:	You must:
1. Limiting HAP or Volatile matter content of coatings.	Determine the HAP or volatile matter and solids content of coating materials according to the procedures in §63.5160(b) and (c).

sfrattini on LAPJZKW1R2 with $$_JOB
VerDate Sep<11>2014 09:16 Apr 04, 2023 Jkt 256165 PO 00000 Frm 01087 Fmt 8010 Sfmt 8010 Q:\40\256165.XXX PC31

TABLE 1 TO § 63.5160—REQUIRED PERFORMANCE TESTING SUMMARY—Continued

If you control HAP on your coil coating line by:	You must:
2. Using a capture system and add-on control device.	Except as specified in paragraph (a) of this section, conduct an initial performance test within 180 days of the applicable compliance date in § 63.5130, and conduct periodic performance tests within 5 years following the previous performance test, as follows: If you are not required to complete periodic performance tests as a requirement of renewing your facility's operating permit under 40 CFR part 70 or 40 CFR part 71, you must conduct the first periodic performance test before March 25, 2023, unless you already have conducted a performance test on or after March 25, 2018; thereafter, you must conduct a performance test no later than 5 years following the previous performance test. Operating limits must be confirmed or reestablished during each performance test. If you are required to complete periodic performance tests as a requirement of renewing your facility's operating permit under 40 CFR part 70 or 40 CFR part 71, you must conduct the periodic testing in accordance with the terms and schedule required by your permit conditions. For each performance test: (1) For each capture and control system, determine the destruction or removal efficiency of each control device according to § 63.5160(d) and the capture efficiency of each capture system according to § 63.5160(e), and (2) confirm or re-establish the operating limits.

(a) If you use a control device to comply with the requirements of § 63.5120, you are not required to conduct a performance test to demonstrate compliance if one or more of the criteria in paragraphs (a)(1) through (3) of this section are met:

(1) The control device is equipped with continuous emission monitors for determining total organic volatile matter concentration, and capture efficiency has been determined in accordance with the requirements of this subpart; and the continuous emission monitors are used to demonstrate continuous compliance in accordance with § 63.5150(a)(2); or

(2) You have received a waiver of performance testing under § 63.7(h); or

(3) The control device is a solvent recovery system and you choose to comply by means of a monthly liquid-liquid material balance.

(b) *Organic HAP content*. You must determine the organic HAP weight fraction of each coating material applied by following one of the procedures in paragraphs (b)(1) through (4) of this section:

(1) *Method 311*. You may test the material in accordance with Method 311 of appendix A of this part. The Method 311 determination may be performed by the manufacturer of the material and the results provided to you. The organic HAP content must be calculated according to the criteria and procedures in paragraphs (b)(1)(i) through (iii) of this section.

(i) Count only those organic HAP in Table 3 to this subpart that are measured to be present at greater than or equal to 0.1 weight percent and greater than or equal to 1.0 weight percent for other organic HAP compounds.

(ii) Express the weight fraction of each organic HAP you count according to paragraph (b)(1)(i) of this section as a value truncated to four places after the decimal point (for example, 0.3791).

(iii) Calculate the total weight fraction of organic HAP in the tested material by summing the counted individual organic HAP weight fractions and truncating the result to three places after the decimal point (for example, 0.763).

(2) *Method 24 in appendix A–7 of part 60*. For coatings, you may determine the total volatile matter content as weight fraction of nonaqueous volatile matter and use it as a substitute for organic HAP, using Method 24 in appendix A–7 of part 60. As an alternative to using Method 24, you may use ASTM D2369–10 (2015), ''Test Method for Volatile Content of Coatings'' (incorporated by reference, see § 63.14). The determination of total volatile matter content using a method specified in this paragraph (b)(2) or as provided in paragraph (b)(3) of this section may be performed by the manufacturer of the coating and the results provided to you.

sfrattini on LAPJZKW1R2 with $$_JOB
VerDate Sep<11>2014 09:16 Apr 04, 2023 Jkt 256165 PO 00000 Frm 01088 Fmt 8010 Sfmt 8010 Q:\40\256165.XXX PC31

(3) *Alternative method.* You may use an alternative test method for determining the organic HAP weight fraction once the Administrator has approved it. You must follow the procedure in §63.7(f) to submit an alternative test method for approval.

(4) *Formulation data.* You may use formulation data provided that the information represents each organic HAP in Table 3 to this subpart that is present at a level equal to or greater than 0.1 percent and equal to or greater than 1.0 percent for other organic HAP compounds in any raw material used, weighted by the mass fraction of each raw material used in the material. Formulation data may be provided to you by the manufacturer of the coating material. In the event of any inconsistency between test data obtained with the test methods specified in paragraphs (b)(1) through (3) of this section and formulation data, the test data will govern.

(c) *Solids content and density.* You must determine the solids content and the density of each coating material applied. You may determine the volume solids content using ASTM D2697–03(2014) Standard Test Method for Volume Nonvolatile Matter in Clear or Pigmented Coatings (incorporated by reference, see §63.14) or ASTM D6093–97 (2016) Standard Test Method for Percent Volume Nonvolatile Matter in Clear or Pigmented Coatings Using a Helium Gas Pycnometer (incorporated by reference, see §63.14), or an EPA approved alternative method. You must determine the density of each coating using ASTM D1475–13 ''Standard Test Method for Density of Liquid Coatings, Inks, and Related Products'' (incorporated by reference, see §63.14) or ASTM D2111–10 (2015) ''Standard Test Methods for Specific Gravity and Density of Halogenated Organic Solvents and Their Admixtures'' (incorporated by reference, see §63.14). The solids determination using ASTM D2697–03(2014) or ASTM D6093–97 (2016) and the density determination using ASTM D1475–13 or ASTM 2111–10 (2015) may be performed by the manufacturer of the material and the results provided to you. Alternatively, you may rely on formulation data provided by material providers to determine the volume solids. In the event of any inconsistency between test data obtained with the ASTM test methods specified in this section and formulation data, the test data will govern.

(d) *Control device destruction or removal efficiency.* If you are using an add-on control device, such as an oxidizer, to comply with the standard in §63.5120, you must conduct performance tests according to Table 1 to §63.5160 to establish the destruction or removal efficiency of the control device or the outlet HAP concentration achieved by the oxidizer, according to the methods and procedures in paragraphs (d)(1) and (2) of this section. During performance tests, you must establish the operating limits required by §63.5121 according to paragraph (d)(3) of this section.

(1) Performance tests conducted to determine the destruction or removal efficiency of the control device must be performed such that control device inlet and outlet testing is conducted simultaneously. To determine the outlet organic HAP concentration achieved by the oxidizer, only oxidizer outlet testing must be conducted. The data must be reduced in accordance with the test methods and procedures in paragraphs (d)(1)(i) through (ix).

(i) Method 1 or 1A of 40 CFR part 60, appendix A, is used for sample and velocity traverses to determine sampling locations.

(ii) Method 2, 2A, 2C, 2D, 2F, or 2G of 40 CFR part 60, appendix A, is used to determine gas volumetric flow rate.

(iii) Method 3, 3A, or 3B of 40 CFR part 60, appendix A, used for gas analysis to determine dry molecular weight. You may also use as an alternative to Method 3B, the manual method for measuring the oxygen, carbon dioxide, and carbon monoxide content of exhaust gas, ANSI/ASME PTC 19.10–1981, ''Flue and Exhaust Gas Analyses'' (incorporated by reference, see §63.14).

(iv) Method 4 of 40 CFR part 60, appendix A, is used to determine stack gas moisture.

(v) Methods for determining gas volumetric flow rate, dry molecular weight, and stack gas moisture must be performed, as applicable, during each test run, as specified in paragraph (d)(1)(vii) of this section.

sfrattini on LAPJZKW1R2 with $$_JOB
VerDate Sep<11>2014 09:16 Apr 04, 2023 Jkt 256165 PO 00000 Frm 01089 Fmt 8010 Sfmt 8010 Q:\40\256165.XXX PC31

(vi) Method 25 or 25A in appendix A–7 of part 60 is used to determine total gaseous non-methane organic matter concentration. You may use Method 18 in appendix A–6 of part 60 to subtract methane emissions from measured total gaseous organic mass emissions as carbon. Use the same test method for both the inlet and outlet measurements, which must be conducted simultaneously. You must submit notification of the intended test method to the Administrator for approval along with notification of the performance test required under § 63.7 (b). You must use Method 25A if any of the conditions described in paragraphs (d)(1)(vi)(A) through (D) of this section apply to the control device.

(A) The control device is not an oxidizer.

(B) The control device is an oxidizer, but an exhaust gas volatile organic matter concentration of 50 ppmv or less is required to comply with the standards in § 63.5120; or

(C) The control device is an oxidizer, but the volatile organic matter concentration at the inlet to the control system and the required level of control are such that they result in exhaust gas volatile organic matter concentrations of 50 ppmv or less; or

(D) The control device is an oxidizer, but because of the high efficiency of the control device, the anticipated volatile organic matter concentration at the control device exhaust is 50 ppmv or less, regardless of inlet concentration.

(vii) Each performance test must consist of three separate runs, except as provided by § 63.7(e)(3); each run must be conducted for at least 1 hour under the conditions that exist when the affected source is operating under normal operating conditions. For the purpose of determining volatile organic matter concentrations and mass flow rates, the average of the results of all runs will apply. If you are demonstrating compliance with the outlet organic HAP concentration limit in § 63.5120(a)(3), only the average outlet volatile organic matter concentration must be determined.

(viii) If you are determining the control device destruction or removal efficiency, for each run, determine the volatile organic matter mass flow rates using Equation 1 of this section:

$$M_f = Q_{sd} C_C (12)(0.0416)\left(10^{-6}\right) \quad \text{(Eq. 1)}$$

Where:

M_f = total organic volatile matter mass flow rate, kg/per hour (h).

C_c = concentration of organic compounds as carbon in the vent gas, as determined by Method 25 or Method 25A, ppmv, dry basis.

Q_{sd} = volumetric flow rate of gases entering or exiting the control device, as determined by Method 2, 2A, 2C, 2D, 2F, or 2G, dry standard cubic meters (dscm)/h.

0.0416 = conversion factor for molar volume, kg-moles per cubic meter (mol/m³) (@ 293 Kelvin (K) and 760 millimeters of mercury (mmHg)).

(ix) For each run, determine the control device destruction or removal efficiency, DRE, using Equation 2 of this section:

$$DRE = \frac{M_{fi} - M_{fo}}{M_{fi}} \times 100 \quad \text{(Eq. 2)}$$

Where:

DRE = organic emissions destruction or removal efficiency of the add-on control device, percent.

M_{fi} = organic volatile matter mass flow rate at the inlet to the control device, kg/h.

M_{fo} = organic volatile matter mass flow rate at the outlet of the control device, kg/h.

(x) The control device destruction or removal efficiency is determined as the average of the efficiencies determined in the three test runs and calculated in Equation 2 of this section.

(2) You must record such process information as may be necessary to determine the conditions in existence at the time of the performance test. Before August 24, 2020, operations during periods of start-up, shutdown, and malfunction will not constitute representative conditions for the purpose of a performance test. On and after August 24, 2020, you must conduct the performance test under representative operating conditions for the coating operation. Operations during periods of start-up, shutdown, or nonoperation do not constitute representative conditions for the purpose of a performance test. The owner or operator may not conduct performance tests during periods of malfunction. You must record

sfrattini on LAPJZKW1R2 with $$_JOB
VerDate Sep<11>2014 09:16 Apr 04, 2023 Jkt 256165 PO 00000 Frm 01090 Fmt 8010 Sfmt 8010 Q:\40\256165.XXX PC31
ER10JN02.000</MATH> ER10JN02.001</MATH>

the process information that is necessary to document operating conditions during the test and explain why the conditions represent normal operation. Upon request, you must make available to the Administrator such records as may be necessary to determine the conditions of performance tests.

(3) *Operating limits*. If you are using a capture system and add-on control device other than a solvent recovery system for which you conduct a liquid-liquid material balance to comply with the requirements in §63.5120, you must establish the applicable operating limits required by §63.5121. These operating limits apply to each capture system and to each add-on emission control device that is not monitored by CEMS, and you must establish the operating limits during performance tests required by paragraph (d) of this section according to the requirements in paragraphs (d)(3)(i) through (iii) of this section.

(i) *Thermal oxidizer*. If your add-on control device is a thermal oxidizer, establish the operating limits according to paragraphs (d)(3)(i)(A) and (B) of this section.

(A) During performance tests, you must monitor and record the combustion temperature at least once every 15 minutes during each of the three test runs. You must monitor the temperature in the firebox of the thermal oxidizer or immediately downstream of the firebox before any substantial heat exchange occurs.

(B) Use the data collected during the performance test to calculate and record the average combustion temperature maintained during the performance test. This average combustion temperature is the minimum operating limit for your thermal oxidizer.

(ii) *Catalytic oxidizer*. If your add-on control device is a catalytic oxidizer, establish the operating limits according to either paragraphs (d)(3)(ii)(A) and (B) or paragraphs (d)(3)(ii)(C) and (D) of this section.

(A) During the performance test, you must monitor and record the temperature just before the catalyst bed and the temperature difference across the catalyst bed at least once every 15 minutes during each of the three test runs.

(B) Use the data collected during the performance test to calculate and record the average temperature just before the catalyst bed and the average temperature difference across the catalyst bed maintained during the performance test. These are the minimum operating limits for your catalytic oxidizer.

(C) As an alternative to monitoring the temperature difference across the catalyst bed, you may monitor the temperature at the inlet to the catalyst bed and implement a site-specific inspection and maintenance plan for your catalytic oxidizer as specified in paragraph (d)(3)(ii)(D) of this section. During the performance test, you must monitor and record the temperature just before the catalyst bed at least once every 15 minutes during each of the three test runs. Use the data collected during the performance test to calculate and record the average temperature just before the catalyst bed during the performance test. This is the minimum operating limit for your catalytic oxidizer.

(D) You must develop and implement an inspection and maintenance plan for your catalytic oxidizer(s) for which you elect to monitor according to paragraph (d)(3)(ii)(C) of this section. The plan must address, at a minimum, the elements specified in paragraphs (d)(3)(ii)(D) *(1) through (3)* of this section.

(*1*) Annual sampling and analysis of the catalyst activity (*i.e.*, conversion efficiency) following the manufacturer's or catalyst supplier's recommended procedures.

(*2*) Monthly inspection of the oxidizer system including the burner assembly and fuel supply lines for problems and,

(*3*) Annual internal and monthly external visual inspection of the catalyst bed to check for channeling, abrasion, and settling. If problems are found, you must take corrective action consistent with the manufacturer's recommendations and conduct a new performance test to determine destruction efficiency according to §63.5160.

(iii) *Other types of control devices*. If you use a control device other than an oxidizer or a solvent recovery system for which you choose to comply by

sfrattini on LAPJZKW1R2 with $$_JOB
VerDate Sep<11>2014 09:16 Apr 04, 2023 Jkt 256165 PO 00000 Frm 01091 Fmt 8010 Sfmt 8010 Q:\40\256165.XXX PC31

means of a monthly liquid-liquid material balance, or wish to monitor an alternative parameter and comply with a different operating limit, you must apply to the Administrator for approval of alternative monitoring under § 63.8(f).

(e) *Capture efficiency*. If you are required to determine capture efficiency to meet the requirements of § 63.5170(e)(2), (f)(1) and (2), (g)(2) through (4), or (i)(2) and (3), you must determine capture efficiency using the procedures in paragraph (e)(1), (2), or (3) of this section, as applicable.

(1) For an enclosure that meets the criteria for a PTE, you may assume it achieves 100 percent capture efficiency. You must confirm that your capture system is a PTE by demonstrating that it meets the requirements of section 6 of EPA Method 204 of 40 CFR part 51, appendix M (or an EPA approved alternative method), and that all exhaust gases from the enclosure are delivered to a control device.

(2) You may determine capture efficiency, CE, according to the protocols for testing with temporary total enclosures that are specified in Method 204A through F of 40 CFR part 51, appendix M. You may exclude never-controlled work stations from such capture efficiency determinations.

(3) As an alternative to the procedures specified in paragraphs (e)(1) and (2) of this section, if you are required to conduct a capture efficiency test, you may use any capture efficiency protocol and test methods that satisfy the criteria of either the Data Quality Objective or the Lower Confidence Limit approach as described in appendix A to subpart KK of this part. You may exclude never-controlled work stations from such capture efficiency determinations.

[67 FR 39812, June 10, 2002, as amended at 85 FR 10862, Feb. 25, 2020]

REQUIREMENTS FOR SHOWING COMPLIANCE

§ 63.5170 How do I demonstrate compliance with the standards?

You must include all coating materials (as defined in § 63.5110) used in the affected source when determining compliance with the applicable emission limit in § 63.5120. To make this determination, you must use at least one of the four compliance options listed in Table 1 of this section. You may apply any of the compliance options to an individual coil coating line, or to multiple lines as a group, or to the entire affected source. You may use different compliance options for different coil coating lines, or at different times on the same line. However, you may not use different compliance options at the same time on the same coil coating line. If you switch between compliance options for any coil coating line or group of lines, you must document this switch as required by § 63.5190(a), and you must report it in the next semiannual compliance report required in § 63.5180.

TABLE 1 TO § 63.5170—COMPLIANCE DEMONSTRATION REQUIREMENTS INDEX

If you choose to demonstrate compliance by:	Then you must demonstrate that:
1. Use of "as purchased" compliant coatings.	a. Each coating material used during the 12-month compliance period does not exceed 0.046 kg HAP per liter solids, as purchased. Paragraph (a) of this section.
2. Use of "as applied" compliant coatings	a. Each coating material used does not exceed 0.046 kg HAP per liter solids on a rolling 12-month average as applied basis, determined monthly. Paragraphs (b)(1) of this section; or
	b. Average of all coating materials used does not exceed 0.046 kg HAP per liter solids on a rolling 12-month average as applied basis, determined monthly. Paragraph (b)(2) of this section.
3. Use of a capture system and control device.	Overall organic HAP control efficiency is at least 98 percent on a monthly basis for individual or groups of coil coating lines; or overall organic HAP control efficiency is at least 98 percent during performance tests conducted according to Table 1 to § 63.5170 and operating limits are achieved continuously for individual coil coating lines; or oxidizer outlet HAP concentration is no greater than 20 ppmv and there is 100-percent capture efficiency during performance tests conducted according to Table 1 to § 63.5170 and operating limits are achieved continuously for individual coil coating lines. Paragraph (c) of this section.

sfrattini on LAPJZKW1R2 with $$_JOB
VerDate Sep<11>2014 09:16 Apr 04, 2023 Jkt 256165 PO 00000 Frm 01092 Fmt 8010 Sfmt 8010 Q:\40\256165.XXX PC31

TABLE 1 TO §63.5170—COMPLIANCE DEMONSTRATION REQUIREMENTS INDEX—Continued

If you choose to demonstrate compliance by:	Then you must demonstrate that:
4. Use of a combination of compliant coatings and control devices and maintaining an acceptable equivalent emission rate.	Average equivalent emission rate does not exceed 0.046 kg HAP per liter solids on a rolling 12-month average as applied basis, determined monthly. Paragraph (d) of this section.

(a) *As-purchased compliant coatings.* If you elect to use coatings that individually meet the organic HAP emission limit in §63.5120(a)(2) as-purchased, to which you will not add HAP during distribution or application, you must demonstrate that each coating material applied during the 12-month compliance period contains no more than 0.046 kg HAP per liter of solids on an as-purchased basis.

(1) Determine the organic HAP content for each coating material in accordance with §63.5160(b) and the volume solids content in accordance with §63.5160(c).

(2) Combine these results using Equation 1 of this section and compare the result to the organic HAP emission limit in §63.5120(a)(2) to demonstrate that each coating material contains no more organic HAP than the limit.

$$H_{siap} = \frac{C_{hi} D_i}{V_{si}} \qquad \text{(Eq. 1)}$$

Where:

H_{siap} = as-purchased, organic HAP to solids ratio of coating material, i, kg organic HAP/liter solids applied.

C_{hi} = organic HAP content of coating material, i, expressed as a weight-fraction, kg/kg.

D_i = density of coating material, i, kg/l.

Vsi = volume fraction of solids in coating, i, l/l.

(b) *As-applied compliant coatings.* If you choose to use ''as-applied'' compliant coatings, you must demonstrate that the average of each coating material applied during the 12-month compliance period contains no more than 0.046 kg of organic HAP per liter of solids applied in accordance with (b)(1) of this section, or demonstrate that the average of all coating materials applied during the 12-month compliance period contain no more than 0.046 kg of organic HAP per liter of solids applied in accordance with paragraph (b)(2) of this section.

(1) To demonstrate that the average organic HAP content on the basis of solids applied for each coating material applied, $H_{Si\ yr}$, is less than 0.046 kg HAP per liter solids applied for the 12-month compliance period, use Equation 2 of this section:

$$H_{Si\ yr} = \frac{\sum_{y=1}^{12}\left[V_i D_i C_{ahi} + \sum_{i=1}^{q} V_j D_j C_{hij}\right]}{\sum_{y=1}^{12} V_i V_{si}} \qquad \text{(Eq. 2)}$$

Where:

$H_{si\ yr}$ = average for the 12-month compliance period, as-applied, organic HAP to solids ratio of material, i, kg organic HAP/liter solids applied.

V_i = volume of coating material, i, l.

D_i = density of coating material, i, kg/l.

C_{ahi} = monthly average, as-applied, organic HAP content of solids-containing coating material, i, expressed as a weight fraction, kilogram (kg)/kg.

V_j = volume of solvent, j, l.

D_j = density of solvent, j, kg/l.

C_{hij} = organic HAP content of solvent, j, added to coating material, i, expressed as a weight fraction, kg/kg.

V_{si} = volume fraction of solids in coating, i, l/l.

sfrattini on LAPJZKW1R2 with $$_JOB
VerDate Sep<11>2014 09:16 Apr 04, 2023 Jkt 256165 PO 00000 Frm 01093 Fmt 8010 Sfmt 8010 Q:\40\256165.XXX PC31
ER10JN02.002</MATH> ER10JN02.003</MATH>

y = identifier for months.
q = number of different solvents, thinners, reducers, diluents, or other non-solids-containing coating materials applied in a month.

(2) To demonstrte that the average organic HAP content on the basis of solids applied, $H_{S\ yr}$, of all coating materials applied is less than 0.046 kg HAP per liter solids applied for the 12-month compliance period, use Equation 3 of this section:

$$H_{S\ yr} = \frac{\sum_{y=1}^{12}\left[\sum_{i=1}^{p} V_i D_i C_{ahi} + \sum_{j=1}^{q} V_j D_j C_{hij}\right]}{\sum_{y=1}^{12}\left[\sum_{i=1}^{p} V_i V_{si}\right]} \qquad \text{(Eq. 3)}$$

Where:

$H_{S\ yr}$ = average for the 12-month compliance period, as-applied, organic HAP to solids ratio of all materials applied, kg organic HAP/liter solids applied.
Vi = volume of coating material, i, l.
D_i = density of coating material, i, kg/l.
C_{ahi} = monthly average, as-applied, organic HAP content of solids-containing coating material, i, expressed as a weight fraction, kilogram (kg)/kg.
Vj = volume of solvent, j, l.
D_j = density of solvent, j, kg/l.
C_{hij} = organic HAP content of solvent, j, added to coating material, i, expressed as a weight fraction, kg/kg.
Vsi = volume fraction of solids in coating, i, l/l.
p = number of different coating materials applied in a month.
q = number of different solvents, thinners, reducers, diluents, or other non-solids-containing coating materials applied in a month.
y = identifier for months.

(c) *Capture and control to reduce emissions to no more than the allowable limit.* If you use one or more capture systems and one or more control devices and demonstrate an average overall organic HAP control efficiency of at least 98 percent for each month to comply with § 63.5120(a)(1); or operate a capture system and oxidizer so that the capture efficiency is 100 percent and the oxidizer outlet HAP concentration is no greater than 20 ppmv on a dry basis to comply with § 63.5120(a)(3), you must follow one of the procedures in paragraphs (c)(1) through (4) of this section. Alternatively, you may demonstrate compliance for an individual coil coating line by operating its capture system and control device and continuous parameter monitoring system according to the procedures in paragraph (i) of this section.

(1) If the affected source uses one compliance procedure to limit organic HAP emissions to the level specified in § 63.5120(a)(1) or (3) and has only always-controlled work stations, then you must demonstrate compliance with the provisions of paragraph (e) of this section when emissions from the affected source are controlled by one or more solvent recovery devices.

(2) If the affected source uses one compliance procedure to limit organic HAP emissions to the level specified in § 63.5120(a)(1) or (3) and has only always-controlled work stations, then you must demonstrate compliance with the provisions of paragraph (f) of this section when emissions are controlled by one or more oxidizers.

(3) If the affected source operates both solvent recovery and oxidizer control devices, one or more never-controlled work stations, or one or more intermittently-controllable work stations, or uses more than one compliance procedure, then you must demonstrate compliance with the provisions of paragraph (g) of this section.

(4) The method of limiting organic HAP emissions to the level specified in § 63.5120(a)(3) is the installation and operation of a PTE around each work station and associated curing oven in the coating line and the ventilation of all organic HAP emissions from each PTE

sfrattini on LAPJZKW1R2 with $$_JOB
VerDate Sep<11>2014 09:16 Apr 04, 2023 Jkt 256165 PO 00000 Frm 01094 Fmt 8010 Sfmt 8010 Q:\40\256165.XXX PC31
ER10JN02.004</MATH>

to an oxidizer with an outlet organic HAP concentration of no greater than 20 ppmv on a dry basis. An enclosure that meets the requirements in §63.5160(e)(1) is considered a PTE. Compliance of the oxidizer with the outlet organic HAP concentration limit is demonstrated either through continuous emission monitoring according to paragraph (c)(4)(ii) of this section or through performance tests according to the requirements of §63.5160(d) and Table 1 to §63.5160. If this method is selected, you must meet the requirements of paragraph (c)(4)(i) of this section to demonstrate continuing achievement of 100 percent capture of organic HAP emissions and either paragraph (c)(4)(ii) or paragraph (c)(4)(iii) of this section, respectively, to demonstrate continuous compliance with the oxidizer outlet organic HAP concentration limit through continuous emission monitoring or continuous operating parameter monitoring:

(i) Whenever a work station is operated, continuously monitor the capture system operating parameter established in accordance with §63.5150(a)(4).

(ii) To demonstrate that the value of the exhaust gas organic HAP concentration at the outlet of the oxidizer is no greater than 20 ppmv, on a dry basis, install, calibrate, operate, and maintain CEMS according to the requirements of §63.5150(a)(2).

(iii) To demonstrate continuous compliance with operating limits established in accordance with §63.5150(a)(3), whenever a work station is operated, continuously monitor the applicable oxidizer operating parameter.

(d) *Capture and control to achieve the emission rate limit.* If you use one or more capture systems and one or more control devices and limit the organic HAP emission rate to no more than 0.046 kg organic HAP emitted per liter of solids applied on a 12-month average as-applied basis, then you must follow one of the procedures in paragraphs (d)(1) through (3) of this section.

(1) If you use one or more solvent recovery devices, you must demonstrate compliance with the provisions in paragraph (e) of this section.

(2) If you use one or more oxidizers, you must demonstrate compliance with the provisions in paragraph (f) of this section.

(3) If you use both solvent recovery devices and oxidizers, or operate one or more never-controlled work stations or one or more intermittently controllable work stations, you must demonstrate compliance with the provisions in paragraph (g) of this section.

(e) *Use of solvent recovery to demonstrate compliance.* If you use one or more solvent recovery devices to control emissions from always-controlled work stations, you must show compliance by following the procedures in either paragraph (e)(1) or (2) of this section:

(1) *Liquid-liquid material balance.* Perform a liquid-liquid material balance for each month as specified in paragraphs (e)(1)(i) through (vi) of this section and use Equations 4 through 6 of this section to convert the data to units of this standard. All determinations of quantity of coating and composition of coating must be made at a time and location in the process after all ingredients (including any dilution solvent) have been added to the coating, or appropriate adjustments must be made to account for any ingredients added after the amount of coating has been determined.

(i) Measure the mass of each coating material applied on the work station or group of work stations controlled by one or more solvent recovery devices during the month.

(ii) If demonstrating compliance with the organic HAP emission rate based on solids applied, determine the organic HAP content of each coating material applied during the month following the procedure in §63.5160(b).

(iii) Determine the volatile matter content of each coating material applied during the month following the procedure in §63.5160(c).

(iv) If demonstrating compliance with the organic HAP emission rate based on solids applied, determine the solids content of each coating material applied during the month following the procedure in §63.5160(c).

(v) For each solvent recovery device used to comply with §63.5120(a), install, calibrate, maintain, and operate according to the manufacturer's specifications, a device that indicates the

sfrattini on LAPJZKW1R2 with $$_JOB
VerDate Sep<11>2014 09:16 Apr 04, 2023 Jkt 256165 PO 00000 Frm 01095 Fmt 8010 Sfmt 8010 Q:\40\256165.XXX PC31

cumulative amount of volatile matter recovered by the solvent recovery device on a monthly basis. The device must be initially certified by the manufacturer to be accurate to within ±2.0 percent.

(vi) For each solvent recovery device used to comply with § 63.5120(a), measure the amount of volatile matter recovered for the month.

(vii) *Recovery efficiency, R_v.* Calculate the volatile organic matter collection and recovery efficiency, R_v, using Equation 4 of this section:

$$R_v = 100 \frac{\sum_{k=1}^{s} M_{kvr}}{\sum_{i=1}^{p} M_i C_{vi} + \sum_{j=1}^{q} M_j} \qquad \text{(Eq. 4)}$$

Where:

R_v = organic volatile matter collection and recovery efficiency, percent.
M_{kvr} = mass of volatile matter recovered in a month by solvent recovery device, k, kg.
M_i = mass of coating material, i, applied in a month, kg.
C_{vi} = volatile matter content of coating material, i, expressed as a weight fraction, kg/kg.
M_j = mass of solvent, thinner, reducer, diluent, or other non-solids-containing coating material (excluding H_2O), j, applied in a month, kg.
p = number of different coating materials applied in a month.
q = number of different solvents, thinners, reducers, diluents, or other non-solids-containing coating materials applied in a month.
s = number of solvent recovery devices used to comply with the standard of § 63.5120 of this subpart, in the facility.

(viii) *Organic HAP emitted, H_e.* Calculate the mass of organic HAP emitted during the month, H_e, using Equation 5 of this section:

$$H_e = \left[1 - \frac{R_v}{100}\right]\left[\sum_{i=1}^{p}\left(C_{hi}M_i + \sum_{j=1}^{q} C_{hij}M_{ij}\right)\right] \qquad \text{(Eq. 5)}$$

Where:

H_e = total monthly organic HAP emitted, kg.
R_v = organic volatile matter collection and recovery efficiency, percent.
C_{hi} = organic HAP content of coating material, i, expressed as a weight-fraction, kg/kg.
M_i = mass of coating material, i, applied in a month, kg.
C_{hij} = organic HAP content of solvent, j, added to coating material, i, expressed as a weight fraction, kg/kg.
M_{ij} = mass of solvent, thinner, reducer, diluent, or other non-solids-containing coating material, j, added to solids-containing coating material, i, in a month, kg.
p = number of different coating materials applied in a month.
q = number of different solvents, thinners, reducers, diluents, or other non-solids-containing coating materials applied in a month.

(ix) *Organic HAP emission rate based on solids applied for the 12-month compliance period,* L_{ANNUAL}. Calculate the organic HAP emission rate based on solids applied for the 12-month compliance period, L_{ANNUAL}, using Equation 6 of this section:

$$L_{ANNUAL} = \frac{\sum_{y=1}^{12} H_e}{\sum_{y=1}^{12}\left[\sum_{i=1}^{p} C_{si}M_i\right]} \qquad \text{(Eq. 6)}$$

Where:

L_{ANNUAL} = mass organic HAP emitted per volume of solids applied for the 12-month compliance period, kg/liter.
H_e = total monthly organic HAP emitted, kg.
C_{si} = solids content of coating material, i, expressed as liter of solids/kg of material.
M_i = mass of coating material, i, applied in a month, kg.
y = identifier for months.
p = number of different coating materials applied in a month.

(x) *Compare actual performance to performance required by compliance option.* The affected source is in compliance

sfrattini on LAPJZKW1R2 with $$_JOB
VerDate Sep<11>2014 09:16 Apr 04, 2023 Jkt 256165 PO 00000 Frm 01096 Fmt 8010 Sfmt 8010 Q:\40\256165.XXX PC31
ER10JN02.005</MATH> ER10JN02.006</MATH> ER10JN02.007</MATH>

with §63.5120(a) if it meets the requirement in either paragraph (e)(1)(x)(A) or (B) of this section:

(A) The average volatile organic matter collection and recovery efficiency, R_v, is 98 percent or greater each month of the 12-month compliance period; or

(B) The organic HAP emission rate based on solids applied for the 12-month compliance period, L_{ANNUAL}, is 0.046 kg organic HAP per liter solids applied or less.

(2) *Continuous emission monitoring of control device performance.* Use continuous emission monitors to demonstrate recovery efficiency, conduct performance tests of capture efficiency and volumetric flow rate, and continuously monitor a site specific operating parameter to ensure that capture efficiency and volumetric flow rate are maintained following the procedures in paragraphs (e)(2)(i) through (xi) of this section:

(i) *Control device destruction or removal efficiency, DRE.* For each control device used to comply with §63.5120(a), continuously monitor the gas stream entering and exiting the control device to determine the total volatile organic matter mass flow rate (e.g., by determining the concentration of the vent gas in grams per cubic meter and the volumetric flow rate in cubic meters per second, such that the total volatile organic matter mass flow rate in grams per second can be calculated using Equation 1 of §63.5160, and the percent destruction or removal efficiency, DRE, of the control device can be calculated for each month using Equation 2 of §63.5160.

(ii) Determine the percent capture efficiency, CE, for each work station in accordance with §63.5160(e).

(iii) *Capture efficiency monitoring.* Whenever a work station is operated, continuously monitor the operating parameter established in accordance with §63.5150(a)(4).

(iv) *Control efficiency, R.* Calculate the overall organic HAP control efficiency, R, achieved for each month using Equation 7 of this section:

$$R = 100\,\frac{\sum_{A=1}^{w}\left[\left(DRE_K CE_A\right)\left(\sum_{i=1}^{p} M_{Ai}C_{vi} + \sum_{j=1}^{q} M_{Aj}\right)\right]}{\sum_{i=1}^{p} M_i C_{vi} + \sum_{j=1}^{q} M_j} \qquad \text{(Eq. 7)}$$

Where:

R = overall organic HAP control efficiency, percent.

DRE_k = organic volatile matter destruction or removal efficiency of control device, k, percent.

CE_A = organic volatile matter capture efficiency of the capture system for work station, A, percent.

M_{Ai} = mass of coating material, i, applied on work station, A, in a month, kg.

C_{vi} = volatile matter content of coating material, i, expressed as a weight fraction, kg/kg.

M_{Aj} = mass of solvent, thinner, reducer, diluent, or other non-solids-containing coating material (including H_2O), j, applied on work station, A, in a month, kg.

M_i = mass of coating material, i, applied in a month, kg.

M_j = mass of solvent, thinner, reducer, diluent, or other non-solids-containing coating material (excluding H_2O), j, applied in a month, kg.

w = number of always-controlled work stations in the facility.

p = number of different coating materials applied in a month.

q = number of different solvents, thinners, reducers, diluents, or other non-solids-containing coating materials applied in a month.

(v) If demonstrating compliance with the organic HAP emission rate based on solids applied, measure the mass of each coating material applied on each work station during the month.

(vi) If demonstrating compliance with the organic HAP emission rate based on solids applied, determine the organic HAP content of each coating material applied during the month in accordance with §63.5160(b).

(vii) If demonstrating compliance with the organic HAP emission rate based on solids applied, determine the solids content of each coating material applied during the month in accordance with §63.5160(c).

(viii) If demonstrating compliance with the organic HAP emission rate based on solids applied, calculate the organic HAP emitted during the month, H_e, for each month using Equation 8 of this section:

sfrattini on LAPJZKW1R2 with $$_JOB
VerDate Sep<11>2014 09:16 Apr 04, 2023 Jkt 256165 PO 00000 Frm 01097 Fmt 8010 Sfmt 8010 Q:\40\256165.XXX PC31
ER10JN02.008</MATH>

$$H_e = \sum_{A=1}^{w}\left[\left(1-\left(DRE_K CE_A\right)\right)\left(\sum_{i=1}^{p}\left(C_{hi}M_{Ai}+\sum_{j=1}^{q}C_{hij}M_{Aij}\right)\right)\right] \quad \text{(Eq. 8)}$$

Where:

H_e = total monthly organic HAP emitted, kg.

DRE_k = organic volatile matter destruction or removal efficiency of control device, k, percent.

CE_A = organic volatile matter capture efficiency of the capture system for work station, A, percent.

C_{hi} = organic HAP content of coating material, i, expressed as a weight-fraction, kg/kg.

M_{Ai} = mass of coating material, i, applied on work station, A, in a month, kg.

C_{hij} = organic HAP content of solvent, j, added to coating material, i, expressed as a weight fraction, kg/kg.

M_{Aij} = mass of solvent, thinner, reducer, diluent, or other non-solids-containing coating material, j, added to solids-containing coating material, i, applied on work station, A, in a month, kg.

w = number of always-controlled work stations in the facility.

p = number of different coating materials applied in a month.

q = number of different solvents, thinners, reducers, diluents, or other non-solids-containing coating materials applied in a month.

(ix) *Organic HAP emission rate based on solids applied for the 12-month compliance period, L_{ANNUAL}.* Calculate the organic HAP emission rate based on solids applied for the 12-month compliance period, L_{ANNUAL}, using Equation 6 of this section.

(x) *Compare actual performance to performance required by compliance option.* The affected source is in compliance with § 63.5120(a) if each capture system operating parameter is operated at an average value greater than or less than (as appropriate) the operating parameter value established in accordance with § 63.5150 for each 3-hour period; and

(A) The overall organic HAP control efficiency, R, is 98 percent or greater for each; or

(B) The organic HAP emission rate based on solids applied for the 12-month compliance period, L_{ANNUAL}, is 0.046 kg organic HAP per liter solids applied or less.

(f) *Use of oxidation to demonstrate compliance.* If you use one or more oxidizers to control emissions from always controlled work stations, you must follow the procedures in either paragraph (f)(1) or (2) of this section:

(1) *Continuous monitoring of capture system and control device operating parameters.* Demonstrate compliance through performance tests of capture efficiency and control device efficiency and continuous monitoring of capture system and control device operating parameters as specified in paragraphs (f)(1)(i) through (xi) of this section:

(i) For each oxidizer used to comply with § 63.5120(a), determine the oxidizer destruction or removal efficiency, DRE, using the procedure in § 63.5160(d).

(ii) Whenever a work station is operated, continuously monitor the operating parameter established in accordance with § 63.5150(a)(3).

(iii) Determine the capture system capture efficiency, CE, for each work station in accordance with § 63.5160(e).

(iv) Whenever a work station is operated, continuously monitor the operating parameter established in accordance with § 63.5150(a)(4).

(v) Calculate the overall organic HAP control efficiency, R, achieved using Equation 7 of this section.

(vi) If demonstrating compliance with the organic HAP emission rate based on solids applied, measure the mass of each coating material applied on each work station during the month.

(vii) If demonstrating compliance with the organic HAP emission rate based on solids applied, determine the organic HAP content of each coating material applied during the month following the procedure in § 63.5160(b).

(viii) If demonstrating compliance with the organic HAP emission rate based on solids applied, determine the solids content of each coating material applied during the month following the procedure in § 63.5160(c).

sfrattini on LAPJZKW1R2 with $$_JOB
VerDate Sep<11>2014 09:16 Apr 04, 2023 Jkt 256165 PO 00000 Frm 01098 Fmt 8010 Sfmt 8010 Q:\40\256165.XXX PC31
ER10JN02.009

(ix) Calculate the organic HAP emitted during the month, H_e, for each month:

(A) For each work station and its associated oxidizer, use Equation 8 of this section.

(B) For periods when the oxidizer has not operated within its established operating limit, the control device efficiency is determined to be zero.

(x) *Organic HAP emission rate based on solids applied for the 12-month compliance period,* L_{ANNUAL}. If demonstrating compliance with the organic HAP emission rate based on solids applied for the 12-month compliance period, calculate the organic HAP emission rate based on solids applied, L_{ANNUAL}, for the 12-month compliance period using Equation 6 of this section.

(xi) *Compare actual performance to performance required by compliance option.* The affected source is in compliance with §63.5120(a) if each oxidizer is operated such that the average operating parameter value is greater than the operating parameter value established in §63.5150(a)(3) for each 3-hour period, and each capture system operating parameter average value is greater than or less than (as appropriate) the operating parameter value established in §63.5150(a)(4) for each 3-hour period; and the requirement in either paragraph (f)(1)(xi)(A) or (B) of this section is met.

(A) The overall organic HAP control efficiency, R, is 98 percent or greater for each; or

(B) The organic HAP emission rate based on solids applied, L_{ANNUAL}, is 0.046 kg organic HAP per liter solids applied or less for the 12-month compliance period.

(2) *Continuous emission monitoring of control device performance.* Use continuous emission monitors, conduct performance tests of capture efficiency, and continuously monitor a site specific operating parameter to ensure that capture efficiency is maintained. Compliance must be demonstrated in accordance with paragraph (e)(2) of this section.

(g) *Combination of capture and control.* You must demonstrate compliance according to the procedures in paragraphs (g)(1) through (8) of this section if both solvent recovery and oxidizer control devices, one or more never controlled coil coating stations, or one or more intermittently controllable coil coating stations are operated; or more than one compliance procedure is used.

(1) *Solvent recovery system using liquid/liquid material balance compliance demonstration.* For each solvent recovery system used to control one or more work stations for which you choose to comply by means of a liquid-liquid material balance, you must determine the organic HAP emissions each month of the 12-month compliance period for those work stations controlled by that solvent recovery system according to either paragraph (g)(1)(i) or (ii) of this section:

(i) In accordance with paragraphs (e)(1)(i) through (iii) and (e)(1)(v) through (viii) of this section if the work stations controlled by that solvent recovery system are only always-controlled work stations; or

(ii) In accordance with paragraphs (e)(1)(ii) through (iii), (e)(1)(v) through (vi), and (h) of this section if the work stations controlled by that solvent recovery system include one or more never-controlled or intermittently-controllable work stations.

(2) *Solvent recovery system using performance test and continuous monitoring compliance demonstration.* For each solvent recovery system used to control one or more coil coating stations for which you choose to comply by means of performance testing of capture efficiency, continuous emission monitoring of the control device, and continuous monitoring of a capture system operating parameter, each month of the 12-month compliance period you must meet the requirements of paragraphs (g)(2)(i) and (ii) of this section:

(i) For each capture system delivering emissions to that solvent recovery system, monitor an operating parameter established in §63.5150(a)(4) to ensure that capture system efficiency is maintained; and

(ii) Determine the organic HAP emissions for those work stations served by each capture system delivering emissions to that solvent recovery system according to either paragraph (g)(2)(ii)(A) or (B) of this section:

(A) In accordance with paragraphs (e)(2)(i) through (iii) and (e)(2)(v)

sfrattini on LAPJZKW1R2 with $$_JOB
VerDate Sep<11>2014 09:16 Apr 04, 2023 Jkt 256165 PO 00000 Frm 01099 Fmt 8010 Sfmt 8010 Q:\40\256165.XXX PC31

through (viii) of this section if the work stations served by that capture system are only always-controlled coil coating stations; or

(B) In accordance with paragraphs (e)(2)(i) through (iii), (e)(2)(v) through (vii), and (h) of this section if the work stations served by that capture system include one or more never-controlled or intermittently-controllable work stations.

(3) *Oxidizer using performance tests and continuous monitoring of operating parameters compliance demonstration.* For each oxidizer used to control emissions from one or more work stations for which you choose to demonstrate compliance through performance tests of capture efficiency, control device efficiency, and continuous monitoring of capture system and control device operating parameters, each month of the 12-month compliance period you must meet the requirements of paragraphs (g)(3)(i) through (iii) of this section:

(i) Monitor an operating parameter established in § 63.5150(a)(3) to ensure that control device destruction or removal efficiency is maintained; and

(ii) For each capture system delivering emissions to that oxidizer, monitor an operating parameter established in § 63.5150(a)(4) to ensure capture efficiency; and

(iii) Determine the organic HAP emissions for those work stations served by each capture system delivering emissions to that oxidizer according to either paragraph (g)(3)(iii)(A) or (B) of this section:

(A) In accordance with paragraphs (f)(1)(i) through (v) and (ix) of this section if the work stations served by that capture system are only always-controlled work stations; or

(B) In accordance with paragraphs (f)(1)(i) through (v), (ix), and (h) of this section if the work stations served by that capture system include one or more never-controlled or intermittently-controllable work stations.

(4) *Oxidizer using continuous emission monitoring compliance demonstration.* For each oxidizer used to control emissions from one or more work stations for which you choose to demonstrate compliance through capture efficiency testing, continuous emission monitoring of the control device, and continuous monitoring of a capture system operating parameter, each month of the 12-month compliance period you must meet the requirements in paragraphs (g)(4)(i) and (ii) of this section:

(i) For each capture system delivering emissions to that oxidizer, monitor an operating parameter established in § 63.5150(a)(4) to ensure capture efficiency; and

(ii) Determine the organic HAP emissions for those work stations served by each capture system delivering emissions to that oxidizer according to either paragraph (g)(4)(ii)(A) or (B) of this section:

(A) In accordance with paragraphs (e)(2)(i) through (iii) and (e)(2)(v) through (viii) of this section if the work stations served by that capture system are only always-controlled work stations; or

(B) In accordance with paragraphs (e)(2)(i) through (iii), (e)(2)(v) through (vii), and (h) of this section if the work stations served by that capture system include one or more never-controlled or intermittently-controllable work stations.

(5) *Uncontrolled work stations.* For uncontrolled work stations, each month of the 12-month compliance period you must determine the organic HAP applied on those work stations using Equation 9 of this section. The organic HAP emitted from an uncontrolled work station is equal to the organic HAP applied on that work station:

$$H_m = \sum_{A=1}^{x} \left(\sum_{i=1}^{p} C_{hi} M_{Ai} + \sum_{j=1}^{q} C_{hij} M_{Aij} \right) \qquad \text{(Eq. 9)}$$

sfrattini on LAPJZKW1R2 with $$_JOB
VerDate Sep<11>2014 09:16 Apr 04, 2023 Jkt 256165 PO 00000 Frm 01100 Fmt 8010 Sfmt 8006 Q:\40\256165.XXX PC31
ER10JN02.010

Where:

H_m = facility total monthly organic HAP applied on uncontrolled coil coating stations, kg.

C_{hi} = organic HAP content of coating material, i, expressed as a weight-fraction, kg/kg.

M_{Ai} = mass of coating material, i, applied on work station, A, in a month, kg.

C_{hij} = organic HAP content of solvent, j, added to coating material, i, expressed as a weight fraction, kg/kg.

M_{Aij} = mass of solvent, thinner, reducer, diluent, or other non-solids-containing coating material, j, added to solids-containing coating material, i, applied on work station, A, in a month, kg.

x = number of uncontrolled work stations in the facility.

p = number of different coating materials applied in a month.

q = number of different solvents, thinners, reducers, diluents, or other non-solids-containing coating materials applied in a month.

(6) If demonstrating compliance with the organic HAP emission rate based on solids applied, each month of the 12-month compliance period you must determine the solids content of each coating material applied during the month following the procedure in §63.5160(c).

(7) *Organic HAP emitted.* You must determine the organic HAP emissions for the affected source for each 12-month compliance period by summing all monthly organic HAP emissions calculated according to paragraphs (g)(1), (g)(2)(ii), (g)(3)(iii), (g)(4)(ii), and (g)(5) of this section.

(8) *Compare actual performance to performance required by compliance option.* The affected source is in compliance with §63.5120(a) for the 12-month compliance period if all operating parameters required to be monitored under paragraphs (g)(2) through (4) of this section were maintained at the values established in §63.5150; and it meets the requirement in either paragraph (g)(8)(i) or (ii) of this section.

(i) The total mass of organic HAP emitted by the affected source was not more than 0.046 kg HAP per liter of solids applied for the 12-month compliance period; or

(ii) The total mass of organic HAP emitted by the affected source was not more than 2 percent of the total mass of organic HAP applied by the affected source each month. You must determine the total mass of organic HAP applied by the affected source in each month of the 12-month compliance period using Equation 9 of this section.

(h) *Organic HAP emissions from intermittently-controllable or never-controlled coil coating stations.* If you have been expressly referenced to this paragraph by paragraphs (g)(1)(ii), (g)(2)(ii)(B), (g)(3)(iii)(B), or (g)(4)(ii)(B) of this section for calculation procedures to determine organic HAP emissions, you must for your intermittently-controllable or never-controlled work stations meet the requirements of paragraphs (h)(1) through (6) of this section:

(1) Determine the sum of the mass of all solids-containing coating materials which are applied on intermittently-controllable work stations in bypass mode, and the mass of all solids-containing coating materials which are applied on never-controlled coil coating stations during each month of the 12-month compliance period, M_{Bi}.

(2) Determine the sum of the mass of all solvents, thinners, reducers, diluents, and other nonsolids-containing coating materials which are applied on intermittently-controllable work stations in bypass mode, and the mass of all solvents, thinners, reducers, diluents and other nonsolids-containing coating materials which are applied on never-controlled work stations during each month of the 12-month compliance period, M_{Bj}.

(3) Determine the sum of the mass of all solids-containing coating materials which are applied on intermittently-controllable work stations in controlled mode, and the mass of all solids-containing coating materials which are applied on always-controlled work stations during each month of the 12-month compliance period, M_{Ci}.

(4) Determine the sum of the mass of all solvents, thinners, reducers, diluents, and other nonsolids-containing coating materials which are applied on intermittently-controllable work stations in controlled mode, and the mass of all solvents, thinners, reducers, diluents, and other nonsolids-containing coating materials which are applied on always-controlled work stations during each month of the 12-month compliance period, M_{Cj}.

sfrattini on LAPJZKW1R2 with $$_JOB
VerDate Sep<11>2014 09:16 Apr 04, 2023 Jkt 256165 PO 00000 Frm 01101 Fmt 8010 Sfmt 8010 Q:\40\256165.XXX PC31

(5) *Liquid-liquid material balance calculation of HAP emitted.* For each work station or group of work stations for which you use the provisions of paragraph (g)(1)(ii) of this section, you must calculate the organic HAP emitted during the month using Equation 10 of this section:

$$H_e = \left[\sum_{i=1}^{p} M_{Ci}C_{hi} + \sum_{j=1}^{q} M_{Cj}C_{hj}\right]\left[1 - \frac{\sum_{k=1}^{s} M_{kvr}}{\sum_{i=1}^{p} M_{Ci}C_{vi} + \sum_{j=1}^{q} M_{Cj}}\right] + \left[\sum_{i=1}^{p} M_{Bi}C_{hi} + \sum_{j=1}^{q} M_{Bj}C_{hj}\right] \quad \text{(Eq. 10)}$$

Where:

H_e = total monthly organic HAP emitted, kg.

M_{ci} = sum of the mass of solids-containing coating material, i, applied on intermittently-controllable work stations operating in controlled mode and the mass of solids-containing coating material, i, applied on always-controlled work stations, in a month, kg.

C_{hi} = organic HAP content of coating material, i, expressed as a weight-fraction, kg/kg.

M_{cj} = sum of the mass of solvent, thinner, reducer, diluent, or other non-solids-containing coating material, j, applied on intermittently-controllable work stations operating in controlled mode and the mass of solvent, thinner, reducer, diluent, or other non-solids-containing coating material, j, applied on always-controlled work stations in a month, kg.

C_{hj} = organic HAP content of solvent, j, expressed as a weight fraction, kg/kg.

M_{kvr} = mass of volatile matter recovered in a month by solvent recovery device, k, kg.

C_{vi} = volatile matter content of coating material, i, expressed as a weight fraction, kg/kg.

M_{Bi} = sum of the mass of solids-containing coating material, i, applied on intermittently-controllable work stations operating in bypass mode and the mass of solids-containing coating material, i, applied on never-controlled work stations, in a month, kg.

M_{Bj} = sum of the mass of solvent, thinner, reducer, diluent, or other non-solids-containing coating material, j, applied on intermittently-controllable work stations operating in bypass mode and the mass of solvent, thinner, reducer, diluent, or other non-solids-containing coating material, j, applied on never-controlled work stations, in a month, kg.

p = number of different coating materials applied in a month.

q = number of different solvents, thinners, reducers, diluents, or other non-solids-containing coating materials applied in a month.

s = number of solvent recovery devices used to comply with the standard of § 63.5120 of this subpart, in the facility.

(6) *Control efficiency calculation of HAP emitted.* For each work station or group of work stations for which you use the provisions of paragraphs (g)(2)(ii)(B), (g)(3)(iii)(B), or (g)(4)(ii)(B) of this section, you must calculate the organic HAP emitted during the month, H_e, using Equation 11 of this section:

$$He = \sum_{A=1}^{w_i}\left[\left(\sum_{i=1}^{p} M_{ci}C_{hi} + \sum_{j=1}^{q} M_{cj}C_{hj}\right)(1 - DRE_k CE_A)\right] + \left[\sum_{i=1}^{p} M_{Bi}C_{hi} + \sum_{j=1}^{q} M_{Bj}C_{hj}\right] \quad \text{(Eq. 11)}$$

Where:

H_e = total monthly organic HAP emitted, kg.

M_{ci} = sum of the mass of solids-containing coating material, i, applied on intermittently-controllable work stations operating in controlled mode and the mass of solids-containing coating material, i, applied on always-controlled work stations, in a month, kg.

C_{hi} = organic HAP content of coating material, i, expressed as a weight-fraction, kg/kg.

M_{cj} = sum of the mass of solvent, thinner, reducer, diluent, or other non-solids-containing coating material, j, applied on

sfrattini on LAPJZKW1R2 with $$_JOB
VerDate Sep<11>2014 09:16 Apr 04, 2023 Jkt 256165 PO 00000 Frm 01102 Fmt 8010 Sfmt 8010 Q:\40\256165.XXX PC31
ER10JN02.011<.MATH> ER25FE20.001<GPH>

intermittently-controllable work stations operating in controlled mode and the mass of solvent, thinner, reducer, diluent, or other non-solids-containing coating material, j, applied on always-controlled work stations in a month, kg.

C_{hj} = organic HAP content of solvent, j, expressed as a weight fraction, kg/kg.

DRE_k = organic volatile matter destruction or removal efficiency of control device, k, percent.

CE_A = organic volatile matter capture efficiency of the capture system for work station, A, percent.

M_{Bi} = sum of the mass of solids-containing coating material, i, applied on intermittently-controllable work stations operating in bypass mode and the mass of solids-containing coating material, i, applied on never-controlled work stations, in a month, kg.

M_{Bj} = sum of the mass of solvent, thinner, reducer, diluent, or other non-solids-containing coating material, j, applied on intermittently-controllable work stations operating in bypass mode and the mass of solvent, thinner, reducer, diluent, or other non-solids-containing coating material, j, applied on never-controlled work stations, in a month, kg.

w_i = number of intermittently-controllable work stations in the facility.

p = number of different coating materials applied in a month.

q = number of different solvents, thinners, reducers, diluents, or other non-solids-containing coating materials applied in a month.

(i) *Capture and control system compliance demonstration procedures using a CPMS for a coil coating line.* If you use an add-on control device, to demonstrate compliance for each capture system and each control device through performance tests and continuous monitoring of capture system and control device operating parameters, you must meet the requirements in paragraphs (i)(1) through (3) of this section.

(1) Conduct performance tests according to the schedule in Table 1 to §63.5160 to determine the control device destruction or removal efficiency, DRE, according to §63.5160(d) and Table 1 to §63.5160.

(2) Determine the emission capture efficiency, CE, in accordance with §63.5160(e).

(3) Whenever a coil coating line is operated, continuously monitor the operating parameters established according to §63.5150(a)(3) and (4) to ensure capture and control efficiency.

[67 FR 39812, June 10, 2002, as amended at 85 FR 10864, Feb. 25, 2020]

REPORTING AND RECORDKEEPING

§63.5180 What reports must I submit?

(a) Submit the reports specified in paragraphs (b) through (i) of this section to the EPA Regional Office that serves the State or territory in which the affected source is located and to the delegated State agency:

(b) You must submit an initial notification required in §63.9(b).

(1) Submit an initial notification for an existing source no later than 2 years after June 10, 2002, or no later than 120 days after the source becomes subject to this subpart, whichever is later.

(2) Submit an initial notification for a new or reconstructed source as required by §63.9(b).

(3) For the purpose of this subpart, a title V permit application may be used in lieu of the initial notification required under §63.9(b), provided the same information is contained in the permit application as required by §63.9(b), and the State to which the permit application has been submitted has an approved operating permit program under part 70 of this chapter and has received delegation of authority from the EPA.

(4) Submit a title V permit application used in lieu of the initial notification required under §63.9(b) by the same due dates as those specified in paragraphs (b)(1) and (2) of this section for the initial notifications.

(c) You must submit a Notification of Performance Test as specified in §§63.7 and 63.9(e) if you are complying with the emission standard using a control device. This notification and the site-specific test plan required under §63.7(c)(2) must identify the operating parameter to be monitored to ensure that the capture efficiency measured during the performance test is maintained. You may consider the operating parameter identified in the site-specific test plan to be approved unless explicitly disapproved, or unless comments received from the Administrator require monitoring of an alternate parameter.

sfrattini on LAPJZKW1R2 with $$_JOB
VerDate Sep<11>2014 09:16 Apr 04, 2023 Jkt 256165 PO 00000 Frm 01103 Fmt 8010 Sfmt 8010 Q:\40\256165.XXX PC31

(d) You must submit a Notification of Compliance Status as specified in § 63.9(h). You must submit the Notification of Compliance Status no later than 30 calendar days following the end of the initial 12-month compliance period described in § 63.5130.

(e) You must submit performance test reports as specified in § 63.10(d)(2) if you are using a control device to comply with the emission standards and you have not obtained a waiver from the performance test requirement.

(f) Before August 24, 2020, you must submit start-up, shutdown, and malfunction reports as specified in § 63.10(d)(5) if you use a control device to comply with this subpart.

(1) Before August 24, 2020, if your actions during a start-up, shutdown, or malfunction of an affected source (including actions taken to correct a malfunction) are not completely consistent with the procedures specified in the source's start-up, shutdown, and malfunction plan specified in § 63.6 (e)(3) and required before August 24, 2020, you must state such information in the report. The start-up, shutdown, or malfunction report will consist of a letter containing the name, title, and signature of the responsible official who is certifying its accuracy, that will be submitted to the Administrator. Separate start-up, shutdown, or malfunction reports are not required if the information is included in the report specified in paragraph (g) of this section. The start-up, shutdown, and malfunction plan and start-up, shutdown, and malfunction report are no longer required on and after August 24, 2020.

(2) [Reserved]

(g) You must submit semi-annual compliance reports containing the information specified in paragraphs (g)(1) and (2) of this section.

(1) Compliance report dates.

(i) The first semiannual reporting period begins 1 day after the end of the initial compliance period described in § 63.5130(d) that applies to your affected source and ends 6 months later.

(ii) The first semiannual compliance report must cover the first semiannual reporting period and be postmarked or delivered no later than 30 days after the reporting period ends.

(iii) Each subsequent compliance report must cover the semiannual reporting period from January 1 through June 30 or the semiannual reporting period from July 1 through December 31.

(iv) Each subsequent compliance report must be postmarked or delivered no later than July 31 or January 31, whichever date is the first date following the end of the semiannual reporting period.

(v) For each affected source that is subject to permitting regulations pursuant to 40 CFR part 70 or part 71, and the permitting authority has established dates for submitting semiannual reports pursuant to 40 CFR 70.6(a)(3)(iii)(A) or 40 CFR 71.6(a)(3)(iii)(A), you may submit the first and subsequent compliance reports according to the dates the permitting authority has established instead of according to the dates in paragraphs (g)(1)(i) through (iv) of this section.

(2) The semi-annual compliance report must contain the following information:

(i) Company name and address.

(ii) Statement by a responsible official with that official's name, title, and signature, certifying the accuracy of the content of the report.

(iii) Date of report and beginning and ending dates of the reporting period. The reporting period is the 6-month period ending on June 30 or December 31. Note that the information reported for each of the 6 months in the reporting period will be based on the last 12 months of data prior to the date of each monthly calculation.

(iv) Identification of the compliance option or options specified in Table 1 to § 63.5170 that you used on each coating operation during the reporting period. If you switched between compliance options during the reporting period, you must report the beginning dates you used each option.

(v) A statement that there were no deviations from the applicable emission limit in § 63.5120 or the applicable operating limit(s) established according to § 63.5121 during the reporting period, and that no CEMS were inoperative, inactive, malfunctioning, out-of-control, repaired, or adjusted.

sfrattini on LAPJZKW1R2 with $$_JOB
VerDate Sep<11>2014 09:16 Apr 04, 2023 Jkt 256165 PO 00000 Frm 01104 Fmt 8010 Sfmt 8010 Q:\40\256165.XXX PC31

(h) You must submit, for each deviation occurring at an affected source where you are not using CEMS to comply with the standards in this subpart, the semi-annual compliance report containing the information in paragraphs (g)(2)(i) through (iv) of this section and the information in paragraphs (h)(1) through (4) of this section:

(1) The total operating time of each affected source during the reporting period.

(2) Before August 24, 2020, you must provide information on the number, duration, and cause of deviations (including unknown cause, if applicable) as applicable, and the corrective action taken. On and after August 24, 2020, you must provide information on the number, date, time, duration, and cause of deviations from an emission limit in §63.5120 or any applicable operating limit established according to §63.5121 (including unknown cause, if applicable) as applicable, and the corrective action taken.

(3) Before August 24, 2020, you must provide information on the number, duration, and cause for continuous parameter monitoring system downtime incidents (including unknown cause other than downtime associated with zero and span and other daily calibration checks, if applicable). On and after August 24, 2020, you must provide the information specified in paragraphs (h)(3)(i) and (ii) of this section.

(i) Number, date, time, duration, cause (including unknown cause), and descriptions of corrective actions taken for continuous parameter monitoring systems that are inoperative (except for zero (low-level) and high-level checks).

(ii) Number, date, time, duration, cause (including unknown cause), and descriptions of corrective actions taken for continuous parameter monitoring systems that are out of control as specified in §63.8(c)(7).

(4) On and after August 24, 2020, for each deviation from an emission limit in §63.5120 or any applicable operating limit established according to §63.5121, you must provide a list of the affected source or equipment, an estimate of the quantity of each regulated pollutant emitted over any emission limit in §63.5120, a description of the method used to estimate the emissions, and the actions you took to minimize emissions in accordance with §63.5140(b).

(i) You must submit, for each deviation from the applicable emission limit in §63.5120 or the applicable operation limit(s) established according to §63.5121 occurring at an affected source where you are using CEMS to comply with the standards in this subpart, the semi-annual compliance report containing the information in paragraphs (g)(2)(i) through (iv) of this section, and the information in paragraphs (i)(1) through (12) of this section:

(1) The date and time that each malfunction of the capture system or add-on control devices started and stopped.

(2) Before August 24, 2020, the date and time that each CEMS was inoperative, except for zero (low-level) and high-level checks. On and after August 24, 2020, for each instance that the CEMS was inoperative, except for zero (low-level) and high-level checks, the date, time, and duration that the CEMS was inoperative; the cause (including unknown cause) for the CEMS being inoperative; and a description of corrective actions taken.

(3) Before August 24, 2020, the date and time that each CEMS was out-of-control, including the information in §63.8(c)(8). On and after August 24, 2020, for each instance that the CEMS was out-of-control, as specified in §63.8(c)(7), the date, time, and duration that the CEMS was out-of-control; the cause (including unknown cause) for the CEMS being out-of-control; and descriptions of corrective actions taken.

(4) Before August 24, 2020, the date and time that each deviation started and stopped, and whether each deviation occurred during a period of start-up, shutdown, or malfunction or during another period. On and after August 24, 2020, the date, time, and duration of each deviation from an emission limit in §63.5120. For each deviation, an estimate of the quantity of each regulated pollutant emitted over any emission limit in §63.5120 to this subpart, and a description of the method used to estimate the emissions.

(5) A summary of the total duration of the deviation during the reporting

sfrattini on LAPJZKW1R2 with $$_JOB
VerDate Sep<11>2014 09:16 Apr 04, 2023 Jkt 256165 PO 00000 Frm 01105 Fmt 8010 Sfmt 8010 Q:\40\256165.XXX PC31

period, and the total duration as a percent of the total source operating time during that reporting period.

(6) Before August 24, 2020, a breakdown of the total duration of the deviations during the reporting period into those that are due to start-up, shutdown, control equipment problems, process problems, other known causes, and other unknown causes. On and after August 24, 2020, a breakdown of the total duration of the deviations during the reporting period into those that are due to control equipment problems, process problems, other known causes, and other unknown causes.

(7) A summary of the total duration of CEMS downtime during the reporting period, and the total duration of CEMS downtime as a percent of the total source operating time during that reporting period.

(8) A breakdown of the total duration of CEMS downtime during the reporting period into periods that are due to monitoring equipment malfunctions, nonmonitoring equipment malfunctions, quality assurance/quality control calibrations, other known causes, and other unknown causes.

(9) Before August 24, 2020, a brief description of the metal coil coating line. On and after August 24, 2020, a list of the affected source or equipment, including a brief description of the metal coil coating line.

(10) The monitoring equipment manufacturer(s) and model number(s).

(11) The date of the latest CEMS certification or audit.

(12) A description of any changes in CEMS, processes, or controls since the last reporting period.

[67 FR 39812, June 10, 2002, as amended at 68 FR 12592, Mar. 17, 2003; 85 FR 10865, Feb. 25, 2020; 85 FR 73908, Nov. 19, 2020]

§ 63.5181 What are my electronic reporting requirements?

(a) Beginning no later than August 24, 2020, you must submit the results of each performance test as required in § 63.5180(e) following the procedure specified in paragraphs (a)(1) through (3) of this section.

(1) For data collected using test methods supported by the EPA's Electronic Reporting Tool (ERT) as listed on the EPA's ERT website (*https://www.epa.gov/electronic-reporting-air-emissions/electronic-reporting-tool-ert*) at the time of the test, you must submit the results of the performance test to the EPA via the Compliance and Emissions Data Reporting Interface (CEDRI). The CEDRI interface can be accessed through the EPA's Central Data Exchange (CDX) (*https://cdx.epa.gov/*). Performance test data must be submitted in a file format generated through the use of the EPA's ERT or an alternate electronic file format consistent with the extensible markup language (XML) schema listed on the EPA's ERT website.

(2) For data collected using test methods that are not supported by the EPA's ERT as listed on the EPA's ERT website at the time of the test, you must submit the results of the performance test in portable document format (PDF) using the attachment module of the ERT.

(3) If you claim that some of the performance test information being submitted under paragraph (a)(1) of this section is confidential business information (CBI), you must submit a complete file generated through the use of the EPA's ERT or an alternate electronic file consistent with the XML schema listed on the EPA's ERT website, including information claimed to be CBI, on a compact disc, flash drive or other commonly used electronic storage medium to the EPA. The electronic medium must be clearly marked as CBI and mailed to U.S. EPA/OAQPS/CORE CBI Office, Attention: Group Leader, Measurement Policy Group, MD C404–02, 4930 Old Page Rd., Durham, NC 27703. The same ERT or alternate file with the CBI omitted must be submitted to the EPA via the EPA's CDX as described in paragraph (a)(1) of this section.

(b) Beginning on August 24, 2020, the owner or operator shall submit the initial notifications required in § 63.9(b) and the notification of compliance status required in §§ 63.9(h) and 63.5180(d) to the EPA via the CEDRI. The CEDRI interface can be accessed through the EPA's CDX (*https://cdx.epa.gov*). The owner or operator must upload to

sfrattini on LAPJZKW1R2 with $$_JOB
VerDate Sep<11>2014 09:16 Apr 04, 2023 Jkt 256165 PO 00000 Frm 01106 Fmt 8010 Sfmt 8010 Q:\40\256165.XXX PC31

CEDRI an electronic copy of each applicable notification in PDF. The applicable notification must be submitted by the deadline specified in this subpart, regardless of the method in which the reports are submitted. Owners or operators who claim that some of the information required to be submitted via CEDRI is CBI shall submit a complete report generated using the appropriate form in CEDRI or an alternate electronic file consistent with the XML schema listed on the EPA's CEDRI website, including information claimed to be CBI, on a compact disc, flash drive, or other commonly used electronic storage medium to the EPA. The electronic medium shall be clearly marked as CBI and mailed to U.S. EPA/OAQPS/CORE CBI Office, Attention: Group Leader, Measurement Policy Group, MD C404–02, 4930 Old Page Rd., Durham, NC 27703. The same file with the CBI omitted shall be submitted to the EPA via the EPA's CDX as described earlier in this paragraph.

(c) Beginning on March 25, 2021, or once the reporting template has been available on the CEDRI website for 1 year, whichever date is later, the owner or operator shall submit the semiannual compliance report required in §63.5180(g) through (i), as applicable, to the EPA via the CEDRI. The CEDRI interface can be accessed through the EPA's CDX (*https://cdx.epa.gov*). The owner or operator must use the appropriate electronic template on the CEDRI website for this subpart (*https://www.epa.gov/electronic-reporting-air-emissions/compliance-and-emissions-data-reporting-interface-cedri*). The date on which the report templates become available will be listed on the CEDRI website. If the reporting form for the semiannual compliance report specific to this subpart is not available in CEDRI at the time that the report is due, you must submit the report to the Administrator at the appropriate addresses listed in §63.13. Once the form has been available in CEDRI for 1 year, you must begin submitting all subsequent reports via CEDRI. The reports must be submitted by the deadlines specified in this subpart, regardless of the method in which the reports are submitted. Owners or operators who claim that some of the information required to be submitted via CEDRI is CBI shall submit a complete report generated using the appropriate form in CEDRI, including information claimed to be CBI, on a compact disc, flash drive, or other commonly used electronic storage medium to the EPA. The electronic medium shall be clearly marked as CBI and mailed to U.S. EPA/OAQPS/CORE CBI Office, Attention: Group Leader, Measurement Policy Group, MD C404–02, 4930 Old Page Rd., Durham, NC 27703. The same file with the CBI omitted shall be submitted to the EPA via the EPA's CDX as described earlier in this paragraph.

(d) If you are required to electronically submit a report through the CEDRI in the EPA's CDX, you may assert a claim of EPA system outage for failure to timely comply with the reporting requirement. To assert a claim of EPA system outage, you must meet the requirements outlined in paragraphs (g)(1) through (7) of this section.

(1) You must have been or will be precluded from accessing CEDRI and submitting a required report within the time prescribed due to an outage of either the EPA's CEDRI or CDX systems.

(2) The outage must have occurred within the period of time beginning five business days prior to the date that the submission is due.

(3) The outage may be planned or unplanned.

(4) You must submit notification to the Administrator in writing as soon as possible following the date you first knew, or through due diligence should have known, that the event may cause or caused a delay in reporting.

(5) You must provide to the Administrator a written description identifying:

(i) The date(s) and time(s) when CDX or CEDRI was accessed and the system was unavailable;

(ii) A rationale for attributing the delay in reporting beyond the regulatory deadline to the EPA system outage;

(iii) Measures taken or to be taken to minimize the delay in reporting; and

(iv) The date by which you propose to report, or if you have already met the reporting requirement at the time of the notification, the date you reported.

sfrattini on LAPJZKW1R2 with $$_JOB
VerDate Sep<11>2014 09:16 Apr 04, 2023 Jkt 256165 PO 00000 Frm 01107 Fmt 8010 Sfmt 8010 Q:\40\256165.XXX PC31

(6) The decision to accept the claim of EPA system outage and allow an extension to the reporting deadline is solely within the discretion of the Administrator.

(7) In any circumstance, the report must be submitted electronically as soon as possible after the outage is resolved.

(e) If you are required to electronically submit a report through CEDRI in the EPA's CDX, you may assert a claim of force majeure for failure to timely comply with the reporting requirement. To assert a claim of force majeure, you must meet the requirements outlined in paragraphs (h)(1) through (5) of this section.

(1) You may submit a claim if a force majeure event is about to occur, occurs, or has occurred or there are lingering effects from such an event within the period of time beginning five business days prior to the date the submission is due. For the purposes of this section, a force majeure event is defined as an event that will be or has been caused by circumstances beyond the control of the affected facility, its contractors, or any entity controlled by the affected facility that prevents you from complying with the requirement to submit a report electronically within the time period prescribed. Examples of such events are acts of nature (*e.g.*, hurricanes, earthquakes, or floods), acts of war or terrorism, or equipment failure or safety hazard beyond the control of the affected facility (*e.g.*, large scale power outage).

(2) You must submit notification to the Administrator in writing as soon as possible following the date you first knew, or through due diligence should have known, that the event may cause or has caused a delay in reporting.

(3) You must provide to the Administrator:

(i) A written description of the force majeure event;

(ii) A rationale for attributing the delay in reporting beyond the regulatory deadline to the force majeure event;

(iii) Measures taken or to be taken to minimize the delay in reporting; and

(iv) The date by which you propose to report, or if you have already met the reporting requirement at the time of the notification, the date you reported.

(4) The decision to accept the claim of force majeure and allow an extension to the reporting deadline is solely within the discretion of the Administrator.

(5) In any circumstance, the reporting must occur as soon as possible after the force majeure event occurs.

[85 FR 10866, Feb. 25, 2020]

§ 63.5190 What records must I maintain?

(a) You must maintain the records specified in paragraphs (a) and (b) of this section in accordance with § 63.10(b)(1):

(1) Records of the coating lines on which you used each compliance option and the time periods (beginning and ending dates and times) you used each option.

(2) Records specified in § 63.10(b)(2) of all measurements needed to demonstrate compliance with this subpart, including:

(i) Continuous emission monitor data in accordance with § 63.5150(a)(2);

(ii) Control device and capture system operating parameter data in accordance with § 63.5150(a)(1), (3), and (4);

(iii) Organic HAP content data for the purpose of demonstrating compliance in accordance with § 63.5160(b);

(iv) Volatile matter and solids content data for the purpose of demonstrating compliance in accordance with § 63.5160(c);

(v) Overall control efficiency determination or alternative outlet HAP concentration using capture efficiency tests and control device destruction or removal efficiency tests in accordance with § 63.5160(d), (e), and (f); and

(vi) Material usage, HAP usage, volatile matter usage, and solids usage and compliance demonstrations using these data in accordance with § 63.5170(a), (b), and (d);

(3) Records specified in § 63.10(b)(3); and

(4) Additional records specified in § 63.10(c) for each continuous monitoring system operated by the owner or operator in accordance with § 63.5150(a)(2).

sfrattini on LAPJZKW1R2 with $$_JOB
VerDate Sep<11>2014 09:16 Apr 04, 2023 Jkt 256165 PO 00000 Frm 01108 Fmt 8010 Sfmt 8010 Q:\40\256165.XXX PC31

(5) On and after August 24, 2020, for each deviation from an emission limitation reported under § 63.5180(h) or (i), a record of the information specified in paragraphs (a)(5)(i) through (iv) of this section, as applicable.

(i) The date, time, and duration of the deviation, as reported under § 63.5180(h) and (i).

(ii) A list of the affected sources or equipment for which the deviation occurred and the cause of the deviation, as reported under § 63.5180(h) and (i).

(iii) An estimate of the quantity of each regulated pollutant emitted over any applicable emission limit in § 63.5120 to this subpart or any applicable operating limit established according to § 63.5121 to this subpart, and a description of the method used to calculate the estimate, as reported under § 63.5180(h) and (i).

(iv) A record of actions taken to minimize emissions in accordance with § 63.5140(b) and any corrective actions taken to return the affected unit to its normal or usual manner of operation.

(b) Maintain records of all liquid-liquid material balances that are performed in accordance with the requirements of § 63.5170.

(c) Any records required to be maintained by this subpart that are in reports that were submitted electronically via the EPA's CEDRI may be maintained in electronic format. This ability to maintain electronic copies does not affect the requirement for facilities to make records, data, and reports available upon request to a delegated air agency or the EPA as part of an on-site compliance evaluation.

[67 FR 39812, June 10, 2002, as amended at 85 FR 10867, Feb. 25, 2020]

DELEGATION OF AUTHORITY

§ 63.5200 What authorities may be delegated to the States?

(a) This subpart can be implemented and enforced by us, the EPA, or a delegated authority such as your State, local, or tribal agency. If the EPA Administrator has delegated authority to your State, local, or tribal agency, then that agency has the authority to implement and enforce this subpart. You should contact your EPA Regional Office to find out if this subpart is delegated to your State, local, or tribal agency.

(b) In delegating implementation and enforcement authority of this subpart to a State, local, or tribal agency under section 40 CFR part 63, subpart E, the authorities contained in paragraph (c) of this section are retained by the EPA Administrator and not transferred to the State, local, or tribal agency.

(c) Authority which will not be delegated to States, local, or tribal agencies:

(1) Approval of alternatives to the emission limitations in § 63.5120;

(2) Approval of major alternatives to test methods under § 63.7(e)(2)(ii) and (f) and as defined in § 63.5160;

(3) Approval of major alternatives to monitoring under § 63.8(f) and as defined in § 63.5150; and

(4) Approval of major alternatives to recordkeeping and reporting under § 63.10(f) and as defined in §§ 63.5180 and 63.5190.

§§ 63.5201–63.5209 [Reserved]

TABLE 1 TO SUBPART SSSS OF PART 63—OPERATING LIMITS IF USING ADD-ON CONTROL DEVICES AND CAPTURE SYSTEM

If you are required to comply with operating limits by § 63.5121, you must comply with the applicable operating limits in the following table:

For the following device . . .	You must meet the following operating limit . . .	And you must demonstrate continuous compliance with the operating limit by . . .
1. thermal oxidizer	a. the average combustion temperature in any 3-hour period must not fall below the combustion temperature limit established according to § 63.5160(d)(3)(i).	i. collecting the combustion temperature data according to § 63.5150(a)(3); ii. reducing the data to 3-hour block averages; and iii. maintaining the 3-hour average combustion temperature at or above the temperature limit.

sfrattini on LAPJZKW1R2 with $$_JOB
VerDate Sep<11>2014 09:16 Apr 04, 2023 Jkt 256165 PO 00000 Frm 01109 Fmt 8010 Sfmt 8002 Q:\40\256165.XXX PC31

For the following device . . .	You must meet the following operating limit . . .	And you must demonstrate continuous compliance with the operating limit by . . .
2. catalytic oxidizer	a. the average temperature measured just before the catalyst bed in any 3-hour period must not fall below the limit established according to § 63.5160(d)(3)(ii); and either	i. collecting the temperature data according to § 63.5150(a)(3); ii. reducing the data to 3-hour block averages; and iii. maintaining the 3-hour average temperature before the catalyst bed at or above the temperature limit.
	b. ensure that the average temperature difference across the catalyst bed in any 3-hour period does not fall below the temperature difference limit established according to § 63.5160(d)(3)(ii); or	i. collecting the temperature data according to § 63.5150(a)(3); ii. reducing the data to 3-hour block averages; and iii. maintaining the 3-hour average temperature difference at or above the temperature difference limit.
	c. develop and implement an inspection and maintenance plan according to § 63.5160(d)(3)(ii).	maintaining an up-to-date inspection and maintenance plan, records of annual catalyst activity checks, records of monthly inspections of the oxidizer system, and records of the annual internal inspections of the catalyst bed. If a problem is discovered during a monthly or annual inspection required by § 63.5160(d)(3)(ii), you must take corrective action as soon as practicable consistent with the manufacturer's recommendations.
3. emission capture system	develop a monitoring plan that identifies operating parameter to be monitored and specifies operating limits according to § 63.5150(a)(4).	conducting monitoring according to the plan § 63.5150(a)(4).

Table 2 to Subpart SSSS of Part 63—Applicability of General Provisions to Subpart SSSS

You must comply with the applicable General Provisions requirements according to the following table:

General provisions reference	Subject	Applicable to subpart SSSS	Explanation
§ 63.1(a)(1)–(4)	General Applicability	Yes.	
§ 63.1(a)(6)	Source Category Listing	Yes.	
§ 63.1(a)(10)–(12)	Timing and Overlap Clarifications.	Yes.	
§ 63.1(b)(1)	Initial Applicability Determination.	Yes	Applicability to Subpart SSSS is also specified in § 63.5090.
§ 63.1(b)(3)	Applicability Determination Recordkeeping.	Yes.	
§ 63.1(c)(1)	Applicability after Standard Established.	Yes.	
§ 63.1(c)(2)	Applicability of Permit Program for Area Sources.	Yes.	
§ 63.1(c)(5)	Extensions and Notifications	Yes.	
§ 63.1(c)(6)	Yes.		
§ 63.1(e)	Applicability of Permit Program Before Relevant Standard is Set.	Yes.	
§ 63.2	Definitions	Yes	Additional definitions are specified in § 63.5110.
§ 63.3	Units and Abbreviations	Yes.	
§ 63.4(a)(1)–(2)	Prohibited Activities	Yes.	
§ 63.4(b)–(c)	Circumvention/Fragmentation	Yes.	
§ 63.5(a)	Construction/Reconstruction	Yes.	
§ 63.5(b)(1), (3), (4), (6)	Requirements for Existing, Newly Constructed, and Reconstructed Sources.	Yes.	
§ 63.5(d)(1)(i)–(ii)(F), (d)(1)(ii)(H), (d)(1)(ii)(J), (d)(1)(iii), (d)(2)–(4).	Application for Approval of Construction/Reconstruction.	Yes	Only total HAP emissions in terms of tons per year are required for § 63.5(d)(1)(ii)(H).
§ 63.5(e)	Approval of Construction/Reconstruction.	Yes.	

sfrattini on LAPJZKW1R2 with $$_JOB
VerDate Sep<11>2014 09:16 Apr 04, 2023 Jkt 256165 PO 00000 Frm 01110 Fmt 8010 Sfmt 8002 Q:\40\256165.XXX PC31

General provisions reference	Subject	Applicable to subpart SSSS	Explanation
§ 63.5(f)	Approval of Construction/Reconstruction Based on Prior State Review.	Yes.	
§ 63.6(a)	Compliance with Standards and Maintenance Requirements-Applicability.	Yes.	
§ 63.6(b)(1)–(5), (b)(7)	Compliance Dates for New and Reconstructed Sources.	Yes	Section 63.5130 specifies the compliance dates.
§ 63.6(c)(1), (2), (5)	Compliance Dates for Existing Sources.	Yes	Section 63.5130 specifies the compliance dates.
§ 63.6(e)(1)(i)–(ii)	General Duty to Minimize Emissions and Requirement to Correct Malfunctions As Soon As Possible.	Yes before August 24, 2020, No on and after August 24, 2020.	See § 63.5140(b) for general duty requirement.
§ 63.6(e)(1)(iii)	Operation and Maintenance Requirements.	Yes.	
§ 63.6(e)(3)(i), (e)(3)(iii)–(ix)	SSMP Requirements	Yes before August 24, 2020, No on and after August 24, 2020.	
§ 63.6(f)(1)	SSM Exemption	Yes before August 24, 2020, No on and after August 24, 2020.	See § 63.5140(b) for general duty requirement.
§ 63.6(f)(2)–(3)	Compliance with Non-Opacity Emission Standards.	Yes.	
§ 63.6(g)	Alternative Non-Opacity Emission Standard.	Yes.	
§ 63.6(h)	Compliance with Opacity/Visible Emission Standards.	No	Subpart SSSS does not establish opacity standards or visible emission standards.
§ 63.6(i)(1)–(14), (i)(16)	Extension of Compliance and Administrator's Authority.	Yes.	
§ 63.6(j)	Presidential Compliance Exemption.	Yes.	
§ 63.7(a)–(d) except (a)(2)(i)–(viii).	Performance Test Requirements.	Yes.	
§ 63.7(e)(1)	Performance Testing	Yes before August 24, 2020, No on and after August 24, 2020.	See § 63.5160(d)(2).
§ 63.7(e)(2)–(4)	Conduct of Performance Tests.	Yes.	
§ 63.7(f)	Alternative Test Method	Yes	EPA retains approval authority.
§ 63.7(g)–(h)	Data Analysis and Waiver of Tests.	Yes.	
§ 63.8(a)(1)–(2)	Monitoring Requirements—Applicability.	Yes	Additional requirements for monitoring are specified in § 63.5150(a).
§ 63.8(a)(4)	Additional Monitoring Requirements.	No	Subpart SSSS does not have monitoring requirements for flares.
§ 63.8(b)	Conduct of Monitoring	Yes.	
§ 63.8(c)(1)	Operation and Maintenance of Continuous Monitoring System (CMS).	Yes before August 24, 2020, No on and after August 24, 2020.	Section 63.5150(a) specifies the requirements for the operation of CMS for capture systems and add-on control devices at sources using these to comply.
§ 63.8(c)(2)–(3)	CMS Operation and Maintenance.	Yes	Applies only to monitoring of capture system and add-on control device efficiency at sources using these to comply with the standards. Additional requirements for CMS operations and maintenance are specified in § 63.5170.
§ 63.8(c)(4)–(5)	CMS Continuous Operation Procedures.	No	Subpart SSSS does not require COMS.
§ 63.8(c)(6)–(8)	CMS Requirements	Yes	Provisions only apply if CEMS are used.
§ 63.8(d)–(e)	CMS Quality Control, Written Procedures, and Performance Evaluation.	Yes	Provisions only apply if CEMS are used.

sfrattini on LAPJZKW1R2 with $$_JOB
VerDate Sep<11>2014 09:16 Apr 04, 2023 Jkt 256165 PO 00000 Frm 01111 Fmt 8010 Sfmt 8002 Q:\40\256165.XXX PC31

General provisions reference	Subject	Applicable to subpart SSSS	Explanation
§ 63.8(f)(1)–(5)	Use of an Alternative Monitoring Method.	Yes	EPA retains approval authority.
§ 63.8(f)(6)	Alternative to Relative Accuracy Test.	No	Section 63.8(f)(6) provisions are not applicable because subpart SSSS does not require CEMS.
§ 63.8(g)	Data Reduction	No	Sections 63.5170, 63.5140, 63.5150, and 63.5150 specify monitoring data reduction.
§ 63.9(a)	Notification of Applicability	Yes.	
§ 63.9(b)(1)	Initial Notifications	Yes.	
§ 63.9(b)(2)	Initial Notifications	Yes	With the exception that § 63.5180(b)(1) provides 2 years after the proposal date for submittal of the initial notification for existing sources.
§ 63.9(b)(4)(i), (b)(4)(v), (b)(5)	Application for Approval of Construction or Reconstruction.	Yes.	
§ 63.9(c)–(e)	Request for Extension of Compliance, New Source Notification for Special Compliance Requirements, and Notification of Performance Test.	Yes	Notification of performance test requirement applies only to capture system and add-on control device performance tests at sources using these to comply with the standards.
§ 63.9(f)	Notification of Visible Emissions/Opacity Test.	No	Subpart SSSS does not require opacity and visible emissions observations.
§ 63.9(g)	Additional Notifications When Using CMS.	No	Provisions for COMS are not applicable.
§ 63.9(h)(1)–(3)	Notification of Compliance Status.	Yes	Section 63.5130 specifies the dates for submitting the notification of compliance status.
§ 63.9(h)(5)–(6)	Clarifications	Yes.	
§ 63.9(i)	Adjustment of Submittal Deadlines.	Yes.	
§ 63.9(j)	Change in Previous Information.	Yes.	
§ 63.9(k)	Yes	Only as specified in § 63.9(j).	
§ 63.10(a)	Recordkeeping/Reporting—Applicability and General Information.	Yes.	
§ 63.10(b)(1)	General Recordkeeping Requirements.	Yes	Additional requirements are specified in § 63.5190.
§ 63.10(b)(2)(i)–(ii)	Recordkeeping of Occurrence and Duration of Startups and Shutdowns and Recordkeeping of Failures to Meet Standards.	Yes before August 24, 2020, No on and after August 24, 2020.	See § 63.5190(a)(5).
§ 63.10(b)(2)(iii)	Maintenance Records	Yes.	
§ 63.10(b)(2)(iv)–(v)	Actions Taken to Minimize Emissions During Startup, Shutdown, and Malfunction.	Yes before August 24, 2020, No on and after August 24, 2020.	See § 63.5190(a)(5).
§ 63.10(b)(2)(vi)	Recordkeeping for CMS Malfunctions.	Yes before August 24, 2020, No on and after August 24, 2020.	See § 63.5190(a)(5).
§ 63.10(b)(2)(vii)–(xiv)	Other CMS Requirements	Yes.	
§ 63.10(b)(3)	Recordkeeping Requirements for Applicability Determinations.	Yes.	
§ 63.10(c)	Additional CMS Recordkeeping Requirements.	No	See § 63.5190(a)(5).
§ 63.10(d)(1)–(2)	General Reporting Requirements and Report of Performance Test Results.	Yes	Additional requirements are specified in § 63.5180(e).
§ 63.10(d)(3)	Reporting Opacity or Visible Emissions Observations.	No	Subpart SSSS does not require opacity and visible emissions observations.

sfrattini on LAPJZKW1R2 with $$_JOB
VerDate Sep<11>2014 09:16 Apr 04, 2023 Jkt 256165 PO 00000 Frm 01112 Fmt 8010 Sfmt 8002 Q:\40\256165.XXX PC31

General provisions reference	Subject	Applicable to subpart SSSS	Explanation
§ 63.10(d)(4)	Progress Reports for Sources with Compliance Extensions.	Yes.	
§ 63.10(d)(5)	Startup, Shutdown, Malfunction Reports.	Yes before August 24, 2020, No on and after August 24, 2020.	
§ 63.10(e)	Additional Reporting Requirements for Sources with CMS.	No.	
§ 63.10(f)	Recordkeeping/Reporting Waiver.	Yes.	
§ 63.11	Control Device Requirements/Flares.	No	Subpart SSSS does not specify use of flares for compliance.
§ 63.12	State Authority and Delegations.	Yes.	
§ 63.13(a)	Addresses	Yes before August 24, 2020, No on and after August 24, 2020.	
§ 63.13(b)	Submittal to State Agencies	Yes.	
§ 63.13(c)	Submittal to State Agencies	Yes before August 24, 2020, No unless the state requires the submittal via CEDRI, on and after August 24, 2020.	
§ 63.14	Incorporation by Reference	Yes	Subpart SSSS includes provisions for alternative ASTM and ASME test methods that are incorporated by reference.
§ 63.15	Availability of Information/Confidentiality.	Yes.	

[85 FR 10868, Feb. 25, 2020, as amended at 85 FR 73908, Nov. 19, 2020]

Table 3 to Subpart SSSS of Part 63—List of Hazardous Air Pollutants That Must Be Counted Toward Total Organic HAP Content if Present at 0.1 Percent or More by Mass

Chemical name	CAS No.
1,1,2,2-Tetrachloroethane	79–34–5
1,1,2-Trichloroethane	79–00–5
1,1-Dimethylhydrazine	57–14–7
1,2-Dibromo-3-chloropropane	96–12–8
1,2-Diphenylhydrazine	122–66–7
1,3-Butadiene	106–99–0
1,3-Dichloropropene	542–75–6
1,4-Dioxane	123–91–1
2,4,6-Trichlorophenol	88–06–2
2,4/2,6-Dinitrotoluene (mixture)	25321–14–6
2,4-Dinitrotoluene	121–14–2
2,4-Toluene diamine	95–80–7
2-Nitropropane	79–46–9
3,3′-Dichlorobenzidine	91–94–1
3,3′-Dimethoxybenzidine	119–90–4
3,3′-Dimethylbenzidine	119–93–7
4,4′-Methylene bis(2-chloroaniline)	101–14–4
Acetaldehyde	75–07–0
Acrylamide	79–06–1
Acrylonitrile	107–13–1
Allyl chloride	107–05–1
alpha-Hexachlorocyclohexane (a-HCH)	319–84–6
Aniline	62–53–3
Benzene	71–43–2
Benzidine	92–87–5
Benzotrichloride	98–07–7
Benzyl chloride	100–44–7
beta-Hexachlorocyclohexane (b-HCH)	319–85–7
Bis(2-ethylhexyl)phthalate	117–81–7
Bis(chloromethyl)ether	542–88–1
Bromoform	75–25–2
Captan	133–06–2
Carbon tetrachloride	56–23–5
Chlordane	57–74–9
Chlorobenzilate	510–15–6
Chloroform	67–66–3
Chloroprene	126–99–8
Cresols (mixed)	1319–77–3
DDE	3547–04–4
Dichloroethyl ether	111–44–4
Dichlorvos	62–73–7
Epichlorohydrin	106–89–8
Ethyl acrylate	140–88–5
Ethylene dibromide	106–93–4
Ethylene dichloride	107–06–2
Ethylene oxide	75–21–8
Ethylene thiourea	96–45–7
Ethylidene dichloride (1,1-Dichloroethane)	75–34–3
Formaldehyde	50–00–0
Heptachlor	76–44–8
Hexachlorobenzene	118–74–1
Hexachlorobutadiene	87–68–3
Hexachloroethane	67–72–1
Hydrazine	302–01–2
Isophorone	78–59–1
Lindane (hexachlorocyclohexane, all isomers)	58–89–9
m-Cresol	108–39–4
Methylene chloride	75–09–2
Naphthalene	91–20–3
Nitrobenzene	98–95–3

sfrattini on LAPJZKW1R2 with $$_JOB
VerDate Sep<11>2014 09:16 Apr 04, 2023 Jkt 256165 PO 00000 Frm 01113 Fmt 8010 Sfmt 8002 Q:\40\256165.XXX PC31

Chemical name	CAS No.
Nitrosodimethylamine	62–75–9
o-Cresol	95–48–7
o-Toluidine	95–53–4
Parathion	56–38–2
p-Cresol	106–44–5
p-Dichlorobenzene	106–46–7
Pentachloronitrobenzene	82–68–8
Pentachlorophenol	87–86–5
Propoxur	114–26–1
Propylene dichloride	78–87–5
Propylene oxide	75–56–9
Quinoline	91–22–5
Tetrachloroethene	127–18–4
Toxaphene	8001–35–2
Trichloroethylene	79–01–6
Trifluralin	1582–09–8
Vinyl bromide	593–60–2
Vinyl chloride	75–01–4
Vinylidene chloride	75–35–4

[85 FR 10870, Feb. 25, 2020]

Subpart TTTT—National Emission Standards for Hazardous Air Pollutants for Leather Finishing Operations

SOURCE: 67 FR 9162, Feb. 27, 2002, unless otherwise noted.

WHAT THIS SUBPART COVERS

§ 63.5280 What is the purpose of this subpart?

This subpart establishes national emission standards for hazardous air pollutants (NESHAP) for leather finishing operations. These standards limit HAP emissions from specified leather finishing operations. This subpart also establishes requirements to demonstrate initial and continuous compliance with the emission standards.

§ 63.5285 Am I subject to this subpart?

(a) You are subject to this subpart if you own or operate a leather finishing operation that is a major source of hazardous air pollutants (HAP) emissions or that is located at, or is part of, a major source of HAP emissions. A leather finishing operation is defined in § 63.5460. In general, a leather finishing operation is a single process or group of processes used to adjust and improve the physical and aesthetic characteristics of the leather surface through multistage application of a coating comprised of dyes, pigments, film-forming materials, and performance modifiers dissolved or suspended in liquid carriers.

(b) You are a major source of HAP emissions if you own or operate a plant site that emits or has the potential to emit any single HAP at a rate of 10 tons (9.07 megagrams) or more per year or any combination of HAP at a rate of 25 tons (22.68 megagrams) or more per year.

(c) You are not subject to this subpart if your source finishes leather solely for the purpose of research and development.

§ 63.5290 What parts of my facility does this subpart cover?

(a) This subpart applies to each new, reconstructed, or existing affected source at leather finishing operations.

(b) The affected source subject to this subpart is the collection of all equipment and activities used for the multistage application of finishing materials to adjust and improve the physical and aesthetic characteristics of the leather surface. This subpart applies to the leather finishing operations listed in paragraphs (b)(1) through (4) of this section and as defined in § 63.5460, whether or not the operations are collocated with leather tanning operations:

(1) Upholstery leather with greater than or equal to 4 grams finish add-on per square foot of leather;

(2) Upholstery leather with less than 4 grams finish add-on per square foot of leather;

(3) Water-resistant/specialty leather; and

(4) Nonwater-resistant leather.

(c) An affected source does not include portions of your leather finishing operation that are listed in paragraphs (c)(1) and (2) of this section:

(1) Equipment used solely with leather tanning operations; and

(2) That portion of your leather finishing operation using a solvent degreasing process, such as in the manufacture of leather chamois, that is already subject to the Halogenated Solvent Cleaning NESHAP (40 CFR part 63, subpart T).

(d) An affected source is a new affected source if you commenced construction of the affected source on or after October 2, 2000, and you meet the

sfrattini on LAPJZKW1R2 with $$_JOB
VerDate Sep<11>2014 09:16 Apr 04, 2023 Jkt 256165 PO 00000 Frm 01114 Fmt 8010 Sfmt 8010 Q:\40\256165.XXX PC31

applicability criteria at the time you commenced construction.

(e) An affected source is reconstructed if you meet the criteria as defined in § 63.2.

(f) An affected source is existing if it is not new or reconstructed.

§ 63.5295 When do I have to comply with this subpart?

(a) If you have a new or reconstructed affected source, you must comply with this subpart according to paragraphs (a)(1) and (2) of this section:

(1) If you startup your affected source before February 27, 2002, then you must comply with the emission standards for new and reconstructed sources in this subpart no later than February 27, 2002.

(2) If you startup your affected source after February 27, 2002, then you must comply with the emission standards for new and reconstructed sources in this subpart upon startup of your affected source.

(b) If you have an existing affected source, you must comply with the emission standards for existing sources no later than February 28, 2005.

(c) If you have an area source that increases its emissions or its potential to emit such that it becomes a major source of HAP and an affected source subject to this subpart, paragraphs (c)(1) and (2) of this section apply.

(1) An area source that meets the criteria of a new affected source, as specified at § 63.5290(d), or a reconstructed affected source, as specified at § 63.5290(e), must be in compliance with this subpart upon becoming a major source.

(2) An area source that meets the criteria of an existing affected source, as specified at § 63.5290(f), must be in compliance with this subpart no later than 3 years after it becomes a major source.

(d) You must meet the notification requirements in § 63.5415 and in subpart A of this part. Some of the notifications must be submitted before you are required to comply with the emission standards in this subpart.

STANDARDS

§ 63.5305 What emission standards must I meet?

The emission standards limit the number of pounds of HAP lost per square foot of leather processed. You must meet each emission limit in Table 1 of this subpart that applies to you.

COMPLIANCE REQUIREMENTS

§ 63.5320 How does my affected major source comply with the HAP emission standards?

(a) All affected sources must be in compliance with the requirements of this subpart at all times.

(b) At all times, the owner or operator must operate and maintain any affected source, including associated air pollution control equipment and monitoring equipment, in a manner consistent with safety and good air pollution control practices for minimizing emissions. The general duty to minimize emissions does not require the owner or operator to make any further efforts to reduce emissions if levels required by the applicable standard have been achieved. Determination of whether a source is operating in compliance with operation and maintenance requirements will be based on information available to the Administrator that may include, but is not limited to, monitoring results, review of operation and maintenance procedures, review of operation and maintenance records, and inspection of the affected source.

(c) You must perform all of the items listed in paragraphs (c)(1) through (10) of this section:

(1) Submit the necessary notifications in accordance with § 63.5415.

(2) Develop and implement a plan for demonstrating compliance in accordance with § 63.5325.

(3) Submit the necessary reports in accordance with § 63.5420.

(4) Keep a finish inventory log, as specified at § 63.5335(b), to record monthly the pounds of each type of finish applied for each leather product process operation and the mass fraction of HAP in each applied finish. You may be required to start recordkeeping

sfrattini on LAPJZKW1R2 with $$_JOB
VerDate Sep<11>2014 09:16 Apr 04, 2023 Jkt 256165 PO 00000 Frm 01115 Fmt 8010 Sfmt 8010 Q:\40\256165.XXX PC31

prior to the compliance dates specified at § 63.5295.

(5) Keep an inventory log, as specified at § 63.5430(f), to record monthly the surface area of leather processed in 1,000's of square feet for each product process operation. You may be required to start recordkeeping prior to the compliance dates specified at § 63.5295.

(6) Determine the actual HAP loss from your affected source in accordance with § 63.5335.

(7) Determine the allowable HAP loss for your affected source in accordance with § 63.5340.

(8) Determine the compliance ratio for your affected source each month as specified at § 63.5330. The compliance ratio compares your actual HAP loss to your allowable HAP loss for the previous 12 months.

(9) Maintain the compliance ratio for your affected source at or below 1.00 in accordance with § 63.5330.

(10) Maintain all the necessary records you have used to demonstrate compliance with this subpart in accordance with § 63.5430.

[67 FR 9162, Feb. 27, 2002, as amended at 84 FR 3320, Feb. 12, 2019]

§ 63.5325 What is a plan for demonstrating compliance and when must I have one in place?

(a) You must develop and implement a written plan for demonstrating compliance that provides the detailed procedures you will follow to monitor and record data necessary for demonstrating compliance with this subpart. Procedures followed for quantifying HAP loss from the source and amount of leather processed vary from source to source because of site-specific factors such as equipment design characteristics and operating conditions. Typical procedures include one or more accurate measurement methods such as weigh scales and volumetric displacement. Because the industry does not have a uniform set of procedures, you must develop and implement your own site-specific plan for demonstrating compliance not later than the compliance date for your source. You must also incorporate the plan for demonstrating compliance by reference in the source's title V permit. The plan for demonstrating compliance must include the items listed in paragraphs (a)(1) through (7) of this section:

(1) The name and address of the owner or operator.

(2) The physical address of the leather finishing operation.

(3) Provide a detailed description of all methods of measurement your source will use to determine your finish usage, HAP content of each finish, quantity of leather processed, and leather product process operation type.

(4) Specify when each measurement will be made.

(5) Provide examples of each calculation you will use to determine your compliance status. Include examples of how you will convert data measured with one parameter to other terms for use in compliance determination.

(6) Provide example logs of how data will be recorded.

(7) Provide a quality assurance/quality control plan to ensure that the data continue to meet compliance demonstration needs.

(b) You may be required to revise your plan for demonstrating compliance. We may require reasonable revisions if the procedures lack detail, are inconsistent, or do not accurately determine finish usage, HAP content of each finish, quantity of leather processed, or leather product process operation type.

§ 63.5330 How do I determine the compliance ratio?

(a) When your source has processed leather for 12 months, you must determine the compliance ratio for your affected source by the fifteenth of each month for the previous 12 months.

(b) You must determine the compliance ratio using Equation 1 of this section as follows:

sfrattini on LAPJZKW1R2 with $$_JOB
VerDate Sep<11>2014 09:16 Apr 04, 2023 Jkt 256165 PO 00000 Frm 01116 Fmt 8010 Sfmt 8010 Q:\40\256165.XXX PC31

$$\text{Compliance Ratio} = \frac{\text{Actual HAP Loss}}{\text{Allowable HAP Loss}} \qquad \text{(Eq. 1)}$$

Where:

Actual HAP Loss = Pounds of actual HAP loss for the previous 12 months, as determined in §63.5335.

Allowable HAP Loss = Pounds of allowable HAP loss for the previous 12 months, as determined in §63.5340.

(1) If the value of the compliance ratio is less than or equal to 1.00, your affected source was in compliance with the applicable HAP emission limits of this subpart for the previous month.

(2) If the value of the compliance ratio is greater than 1.00, your affected source was deviating from compliance with the applicable HAP emission limits of this subpart for the previous month.

§63.5335 How do I determine the actual HAP loss?

(a) This section describes the information and procedures you must use to determine the actual HAP loss from your leather finishing operation. By the fifteenth of each month, you must determine the actual HAP loss in pounds from your leather finishing operation for the previous month.

(b) Use one of the procedures listed in either paragraph (b)(1) or (b)(2) of this section for determining the actual HAP loss from your affected sources. Regardless of which procedure is used to determine HAP loss, each source is still required to maintain a written or printed log that documents the total quantity of solvents/finishes used each month in the process and the mass fraction of HAP in each solvent/finish.

(1) *Measure Finish as Applied*. Use a finish inventory log to record the pounds of each type of finish applied for each leather product process operation and the mass fraction of HAP in each applied finish. Figure 1 of this subpart shows an example log for recording the minimum information necessary to determine your finish usage and HAP loss. The finish inventory log must contain, at a minimum, the information for each type of finish applied listed in paragraphs (b)(1)(i) through (vii) of this section:

(i) Finish type;

(ii) Pounds (or density and volume) of each finish applied to the leather;

(iii) Mass fraction of HAP in each applied finish;

(iv) Date of the recorded entry;

(v) Time of the recorded entry;

(vi) Name of the person recording the entry;

(vii) Product process operation type.

(2) *Chemical Inventory Mass Balance*. Determine the actual monthly HAP loss from your affected source through mass balance calculations. You must follow your detailed mass balance procedures and calculations in your plan for demonstrating compliance in accordance with §63.5325. The HAP mass balance must be based on a detailed inventory of stored chemicals at the beginning and end of each month, and business purchasing records to indicate additions to the inventory of chemical supplies. The net loss of chemicals used for finish applications is determined by subtracting the end of the month chemical inventory from the beginning of the month chemical inventory and adding the quantities of all chemicals purchased during the same 1-month period. In situations when an excess amount of finish is formulated, you must have documented procedures on how the excess amount is accounted for in the mass balance.

(c) To determine the pounds of HAP loss for the previous month, you must first determine the pounds of HAP loss from each finish application according to paragraph (c)(1) or (2) of this section.

(1) For facilities not using add-on emission control devices, the entire HAP content of the finishes are assumed to be released to the environment. Using the finish inventory log, multiply the pounds of each recorded finish usage by the corresponding mass fraction of HAP in the finish. The result is the HAP loss in pounds from

sfrattini on LAPJZKW1R2 with $$_JOB
VerDate Sep<11>2014 09:16 Apr 04, 2023 Jkt 256165 PO 00000 Frm 01117 Fmt 8010 Sfmt 8010 Q:\40\256165.XXX PC31
ER27FE02.003</MATH>

each finish application. Sum the pounds of HAP loss from all finish applications recorded during the previous month to determine the total monthly HAP loss in pounds from your finishing operation.

(2) For facilities using add-on emission control devices, the finish inventory log and the emission reduction efficiency of the add-on capture and control devices can be used to determine the net HAP loss in pounds. The emission reduction efficiency for a control device must be determined from a performance test conducted in accordance with §§ 63.5375 and 63.5380. Using the finish inventory log, multiply the pounds of each recorded finish usage by the corresponding mass fraction of HAP in the finish. The result is the gross HAP loss in pounds from each finish application prior to the add-on control device. Multiply the gross HAP loss by the percent emission reduction achieved by the add-on control device and then subtract this amount from the gross HAP loss. The result is the net HAP loss in pounds from each finish application. Sum the pounds of net HAP loss from all finish applications recorded during the previous month to determine the total monthly net HAP loss in pounds from your finishing operation.

(d) After collecting HAP loss data for 12 months, you must also determine by the fifteenth of each month the annual HAP loss in pounds by summing the monthly HAP losses for the previous 12 months. The annual HAP loss is the ''actual HAP loss,'' which is used in Equation 1 of § 63.5330 to calculate your compliance ratio, as described in § 63.5330.

[67 FR 9162, Feb. 27, 2002, as amended at 70 FR 6360, Feb. 7, 2005]

§ 63.5340 How do I determine the allowable HAP loss?

(a) By the fifteenth of each month, you must determine the allowable HAP loss in pounds from your leather finishing operation for the previous month.

(b) To determine the allowable HAP loss for your leather finishing operation, you must select the appropriate HAP emission limit, expressed in pounds of HAP loss per 1,000 square feet of leather processed, from Table 1 of this subpart, for each type of leather product process operation performed during the previous 12 months. Under the appropriate existing or new source column, select the HAP emission limit that corresponds to each type of product process operation performed during the previous 12 months. Next, determine the annual total of leather processed in 1,000's of square feet for each product process operation in accordance with § 63.5400. Then, multiply the annual total of leather processed in each product process operation by the corresponding HAP emission limit to determine the allowable HAP loss in pounds for the corresponding leather product process operation. Finally, sum the pounds of HAP loss from all leather product process operations performed in the previous 12 months. Equation 1 of this section illustrates the calculation of allowable HAP loss as follows:

$$\text{Allowable HAP Loss} = \sum_{i=1}^{n} \left(\begin{array}{c} \text{Annual Total} \\ \text{of Leather} \\ \text{Processed}_i \end{array} * \begin{array}{c} \text{HAP} \\ \text{Emission} \\ \text{Limit}_i \end{array} \right) \qquad \text{(Eq. 1)}$$

Where:

Annual Total of Leather Processed = 1,000's of square feet of leather processed in the previous 12 months in product process operation ''i''.

HAP Emission Limit = From Table 1 of this subpart, the HAP emission limit in pounds of HAP loss per 1,000 square feet of leather processed for product process operation ''i''.

n = Number of leather product process operation types performed during the previous 12 months.

(c) The resulting ''allowable HAP loss'' is used in Equation 1 of § 63.5330

sfrattini on LAPJZKW1R2 with $$_JOB
VerDate Sep<11>2014 09:16 Apr 04, 2023 Jkt 256165 PO 00000 Frm 01118 Fmt 8010 Sfmt 8010 Q:\40\256165.XXX PC31
ER27FE02.004</MATH>

to calculate your compliance ratio, as described in § 63.5330.

§ 63.5345 How do I distinguish between the two upholstery product process operations?

(a) Product process operations that finish leather for use in automobile and furniture seat coverings are categorized as an upholstery product process operation. There are two upholstery product process operations subject to the requirements of this subpart—operations with less than 4 grams of finish add-on per square foot, and operations with 4 grams or more of finish add-on per square foot. You must distinguish between the two upholstery product process operations so that you can determine which HAP emission limit in Table 1 of this subpart applies to your affected source.

(b) You must determine finish add-on by calculating the difference in mass before and after the finishing process. You may use an empirical method to determine the amount of finish add-on applied during the finishing process, as described in paragraphs (b)(1) through (4) of this section:

(1) Weigh a one square foot representative section of polyester film, paper, cardstock, or equivalent material substrate to be finished. This will provide an initial mass and surface area prior to starting the finishing process.

(2) Use a scale with an accuracy of at least 5 percent of the mass in grams of the representative section of substrate.

(3) Upon completion of these measurements, process the representative section of substrate on the finishing line as you would for a typical section of leather.

(4) After the finishing and drying process, weigh the representative section of substrate to determine the final mass. Divide the net mass in grams gained on the representative section by its surface area in square feet to determine grams per square foot of finish add-on. Equation 1 of this section illustrates this calculation, as follows:

$$\text{Finish Add-On} = \frac{\left(\text{Final Mass} - \text{Initial Mass}\right)}{\left(\text{Surface Area}\right)} \qquad \text{(Eq. 1)}$$

Where:

Finish Add-On = Grams per square foot of finish add-on applied to a representative section of polyester film or equivalent material substrate.

Final Mass = Final mass in grams of representative section of polyester film or equivalent material substrate, after finishing and drying.

Initial Mass = Initial mass in grams of representative section of polyester film or equivalent material substrate, prior to finishing.

Surface Area = Surface area in square feet of a representative section of polyester film or equivalent material substrate.

(c) Any appropriate engineering units may be used for determining the finish add-on. However, finish add-on results must be converted to the units of grams of finish add-on per square foot of leather processed. If multiple representative leather sections are analyzed, then use the average of these measurements for selecting the appropriate product process operation.

(d) For each leather product with a unique finish application, you must maintain records to support how the leather product was categorized to a product process operations type. You must repeat the leather product categorization to a product process operation type no less frequently than once every 5 years if the applied finish chemical characteristics of the leather product have not changed, or when the applied finish chemical characteristics of the leather product change, whichever is sooner.

[67 FR 9162, Feb. 27, 2002, as amended at 70 FR 6360, Feb. 7, 2005]

sfrattini on LAPJZKW1R2 with $$_JOB
VerDate Sep<11>2014 09:16 Apr 04, 2023 Jkt 256165 PO 00000 Frm 01119 Fmt 8010 Sfmt 8010 Q:\40\256165.XXX PC31
ER27FE02.005</MATH>

§ 63.5350 How do I distinguish between the water-resistant/specialty and nonwater-resistant leather product process operations?

(a) Product process operations that finish leather for nonupholstery use are categorized as either water-resistant/specialty or nonwater-resistant product process operations. You must distinguish between the water-resistant/specialty and nonwater-resistant product process operations so that you can determine which HAP emission limit in Table 1 of this subpart applies to your affected source. Water-resistant and nonwater-resistant product process operations for nonupholstery use can be distinguished using the methods described in paragraph (b) of this section. Specialty leather product process operations for nonupholstery use can be distinguished using the criteria described in paragraph (c) of this section.

(b) To determine whether your product process operation produces water-resistant or nonwater-resistant leather, you must conduct the Maeser Flexes test method according to American Society for Testing and Materials (ASTM) Designation D2099–00 (incorporated by reference-see § 63.14) or a method approved by the Administrator.

(1) Statistical analysis of initial water penetration data performed to support ASTM Designation D2099–00 indicates that poor quantitative precision is associated with this testing method. Therefore, at a minimum, 36 leather substrate samples (*i.e.,* three sections of leather substrate from at least 12 sides of leather), must be tested to determine the water-resistant characteristics of the leather. You must average the results of these tests to determine the final number of Maeser Flexes prior to initial water penetration.

(2) Results from leather samples indicating an average of 5,000 Maeser Flexes or more is considered a water-resistant product process operation, and results indicating less than 5,000 Maeser Flexes is considered a nonwater-resistant product process operation. However, leather samples resulting in less than 5,000 Maeser Flexes may be categorized as specialty leather in paragraph (c) of this section.

(3) For each leather product with a unique finish application, you must maintain records to support how the leather product was categorized to a product process operations type. You must repeat the leather product categorization to a product process operation type no less frequently than once every 5 years if the applied finish chemical characteristics of the leather product have not changed, or when the applied finish chemical characteristics of the leather product do change, whichever is sooner.

(c) To determine whether your product process operation produces specialty leather, you must meet the criteria in paragraphs (c)(1) and (2), or (c)(3) of this section:

(1) The leather must be a select grade of chrome tanned, bark retanned, or fat liquored leather.

(2) The leather must be retanned through the application of grease, waxes, and oil in quantities greater than 12 percent of the dry leather weight. Specialty leather is also finished with higher solvent-based finishes that provide rich color, luster, or an oily/tacky feel. Specialty leather products may include, but are not limited to, specialty shoe leather and top grade football leathers.

(3) The leather must be a high-quality dress or performance shoe leather that can withstand one of the visual tests in paragraph (c)(3)(i) or (ii) of this section:

(i) Moisture injection into the leather using vacuum mulling without signs of blistering.

(ii) Prolonged ironing at 200 °F for smoothing out surface roughness without finish lift off.

(4) For each leather product with a unique finish application, you must maintain records to support how the leather product was categorized to a product process operations type. You must repeat the leather product categorization to a product process operation type no less frequently than once every 5 years if the applied finish chemical characteristics of the leather product have not changed, or when the applied finish chemical characteristics

sfrattini on LAPJZKW1R2 with $$_JOB
VerDate Sep<11>2014 09:16 Apr 04, 2023 Jkt 256165 PO 00000 Frm 01120 Fmt 8010 Sfmt 8010 Q:\40\256165.XXX PC31

of the leather product do change, whichever is sooner.

[67 FR 9162, Feb. 27, 2002, as amended at 70 FR 6360, Feb. 7, 2005]

§ 63.5355 How do I monitor and collect data to demonstrate continuous compliance?

(a) You must monitor and collect data according to this section.

(b) You must collect data at all required intervals as specified in your plan for demonstrating compliance as specified at § 63.5325.

(c) For emission control devices, except for monitor malfunctions, associated repairs, and required quality assurance or control activities (including, as applicable, calibration checks and required zero and span adjustments), you must monitor continuously (or collect data at all required intervals) at all times that the affected source is operating.

(d) You may not use data recorded during monitoring malfunctions, associated repairs, and required quality assurance or control activities in data averages and calculations used to report emission or operating levels, nor may such data be used in fulfilling a minimum data availability requirement, if applicable. You must use all the data collected during all other periods in assessing the compliance ratio, and, if an emission control device is used, in assessing the operation of the control device.

§ 63.5360 How do I demonstrate continuous compliance with the emission standards?

(a) You must demonstrate continuous compliance with the emission standards in § 63.5305 by following the requirements in paragraphs (a)(1) and (2) of this section:

(1) You must collect and monitor data according to the procedures in your plan for demonstrating compliance as specified in § 63.5325.

(2) If you use an emission control device, you must comply with § 63.982(a)(2) (subpart SS of this part) and collect the monitoring data as specified therein.

(3) You must maintain your compliance ratio less than or equal to 1.00, as specified at § 63.5330.

(b) You must report each instance in which you did not meet the emission standards in § 63.5305. These deviations must be reported according to the requirements in § 63.5420(b).

(c) You must conduct the initial compliance demonstration before the compliance date that is specified for your source in § 63.5295.

[67 FR 9162, Feb. 27, 2002, as amended at 84 FR 3321, Feb. 12, 2019]

TESTING AND INITIAL COMPLIANCE REQUIREMENTS

§ 63.5375 When must I conduct a performance test or initial compliance demonstration?

You must conduct performance tests after the installation of any emission control device that reduces HAP emissions and will be used to comply with the HAP emission requirements of this subpart. You must complete your performance tests not later than 60 calendar days before the end of the 12-month period used in the initial compliance determination.

[84 FR 3321, Feb. 12, 2019]

§ 63.5380 How do I conduct performance tests?

(a) Each performance test must be conducted according to the requirements in § 63.7(e)(2) through (4) and the procedures of § 63.997(e)(1) and (2).

(b) Performance tests shall be conducted under such conditions as the Administrator specifies to the owner or operator based on representative performance of the affected source for the period being tested. Representative conditions exclude periods of startup and shutdown. The owner or operator may not conduct performance tests during periods of malfunction. The owner or operator must record the process information that is necessary to document operating conditions during the test and include in such record an explanation to support that such conditions represent normal operation. Upon request, the owner or operator shall make available to the Administrator such records as may be necessary to determine the conditions of performance tests.

sfrattini on LAPJZKW1R2 with $$_JOB
VerDate Sep<11>2014 09:16 Apr 04, 2023 Jkt 256165 PO 00000 Frm 01121 Fmt 8010 Sfmt 8010 Q:\40\256165.XXX PC31

(c) You must conduct three separate test runs for each performance test required in this section, as specified in § 63.7(e)(3). Each test run must last at least 1 hour.

[67 FR 9162, Feb. 27, 2002, as amended at 84 FR 3321, Feb. 12, 2019]

§ 63.5385 How do I measure the quantity of finish applied to the leather?

(a) To determine the amount of finish applied to the leather, you must measure the mass, or density, and volume of each applied finish.

(b) Determine the mass of each applied finish with a scale calibrated to an accuracy of at least 5 percent of the amount measured. The quantity of all finishes used for finishing operations must be weighed or have a predetermined weight.

(c) Determine the density and volume of each applied finish according to the criteria listed in paragraphs (c)(1) through (3) of this section:

(1) Determine the density of each applied finish in pounds per gallon in accordance with § 63.5395. The finish density will be used to convert applied finish volumes from gallons into mass units of pounds.

(2) Volume measurements of each applied finish can be obtained with a flow measurement device. For each flow measurement device, you must perform the items listed in paragraphs (c)(2)(i) through (v) of this section:

(i) Locate the flow sensor and other necessary equipment such as straightening vanes in or as close to a position that provides a representative flow.

(ii) Use a flow sensor with a minimum tolerance of 2 percent of the flow rate.

(iii) Reduce swirling flow or abnormal velocity distributions due to upstream and downstream disturbances.

(iv) Conduct a flow sensor calibration check at least semiannually.

(v) At least monthly, inspect all components for integrity, all electrical connections for continuity, and all mechanical connections for leakage.

(3) Volume measurements of each applied finish can be obtained with a calibrated volumetric container with an accuracy of at least 5 percent of the amount measured.

§ 63.5390 How do I measure the HAP content of a finish?

(a) To determine the HAP content of a finish, the reference method is EPA Method 311 of appendix A of 40 CFR part 63. You may use EPA Method 311, an alternative method approved by the Administrator, or any other reasonable means for determining the HAP content. Other reasonable means of determining HAP content include, but are not limited to, a material safety data sheet (MSDS) or a manufacturer's hazardous air pollutant data sheet. If the HAP content is provided on a MSDS or a manufacturer's data sheet as a range of values, then the highest HAP value of the range must be used for the determination of compliance to this standard. This value must be entered on the finish log for each type of finish applied. You are not required to test the materials that you use, but the Administrator may require a test using EPA Method 311 (or another approved method) to confirm the reported HAP content. However, if the results of an analysis by EPA Method 311 are different from the HAP content determined by another means, the EPA Method 311 results will govern compliance determinations.

(b) You may use the weighted average of the HAP content analysis as determined in paragraph (a) of this section for each finish when you perform one of the actions listed in paragraphs (b)(1) and (2) of this section:

(1) Mix your own finishes on site.

(2) Mix new quantities of finish with previous quantities of finish that may have a different HAP content.

§ 63.5395 How do I measure the density of a finish?

(a) To determine the density of a finish, the reference method is EPA Method 24 of appendix A of 40 CFR part 60. You may use EPA Method 24, an alternative method approved by the Administrator, or any other reasonable means for determining the density of a finish. Other reasonable means of determining density include, but are not limited to, an MSDS or a manufacturer's hazardous air pollutant data sheet. If the density is provided on a MSDS or a manufacturer's data sheet as a range of values, then the highest density

sfrattini on LAPJZKW1R2 with $$_JOB
VerDate Sep<11>2014 09:16 Apr 04, 2023 Jkt 256165 PO 00000 Frm 01122 Fmt 8010 Sfmt 8010 Q:\40\256165.XXX PC31

value of the range must be used for the determination of compliance to this standard. This value must be entered on the finish log for each type of finish applied. You are not required to test the materials that you use, but the Administrator may require a test using EPA Method 24 (or another approved method) to confirm the reported density. However, if the results of an analysis by EPA Method 24 are different from the density determined by another means, the EPA Method 24 results will govern compliance determinations.

(b) You may use the weighted average of finish densities as determined in paragraph (a) of this section for each finish when you perform one of the actions listed in paragraphs (b)(1) and (2) of this section:

(1) Mix your own finishes on site.

(2) Mix new quantities of finish with previous quantities of finish that may have different densities.

(c) Equation 1 of this section may be used to determine the weighted average of finish densities, as follows:

$$\text{Average Weighted Density} = \frac{\sum_{i=1}^{n} \text{Mass}_i * \text{Density}_i}{\sum_{i=1}^{n} \text{Mass}_i} \qquad \text{(Eq. 1)}$$

Where:

Average Weighted Density = The average weighted density of applied finishes in pounds per gallon.

Mass = Pounds of finish ''i'' applied.

Density = The density of finish ''i'' in pounds per gallon.

n = Number of finish types applied.

§ 63.5400 How do I measure the quantity of leather processed?

(a) This section describes the information and procedures you must use to determine the quantity of leather processed at your affected source.

(1) To determine the surface area (i.e., quantity) of leather substrate processed each month at your source for each product process operation, follow the procedures in your plan for demonstrating compliance. You must consistently measure the surface area of processed leather substrate at one of the manufacturing locations listed in paragraph (a)(1)(i) or (ii) of this section:

(i) Measure the surface area of processed leather upon exiting the leather finishing operation.

(ii) Measure the surface area of processed leather upon shipment from the source.

(2) By the fifteenth of each month, you must determine the quantity of leather processed in 1,000's of square feet for each product process operation during the previous month. After collecting data on the amount of leather processed for 12 months, you must also determine by the fifteenth of each month the annual total of leather processed in 1,000's of square feet for each product process operation by summing the monthly quantities of leather processed in each product process operation for the previous 12 months. The ''annual total of leather processed'' in each product process operation is used in Equation 1 of § 63.5340 to calculate your allowable HAP loss as described in § 63.5340. Your allowable HAP loss is then subsequently used to calculate your compliance ratio as described in § 63.5330.

(b) To determine the surface area of leather processed at your source for each product process operation, you must use one of the methods listed in paragraphs (b)(1) and (2) of this section:

(1) Premeasured leather substrate sections being supplied by another manufacturer as an input to your finishing process.

sfrattini on LAPJZKW1R2 with $$_JOB
VerDate Sep<11>2014 09:16 Apr 04, 2023 Jkt 256165 PO 00000 Frm 01123 Fmt 8010 Sfmt 8010 Q:\40\256165.XXX PC31
ER27FE02.006</MATH>

(2) Measure the surface area of each piece of processed or shipped leather with a computer scanning system accurate to 0.1 square feet. The computer scanning system must be initially calibrated for minimum accuracy to the manufacturer's specifications. For similar leather production runs, use an average based on a minimum of 500 pieces of leather in lieu of individual measurements.

(c) Except as provided in paragraph (d) of this section, you must include the surface area of each piece of processed leather only once when determining the monthly quantity of leather processed, regardless of the number of times a piece of leather is reprocessed through a portion of the finishing operations.

(d) If a piece of leather is completely stripped of all applied finishes and reprocessed through the entire finishing operation as if it were a new piece of leather, you may recount the surface area of leather reprocessed when determining the monthly quantity of leather processed.

NOTIFICATIONS, REPORTS, AND RECORDS

§ 63.5415 What notifications must I submit and when?

(a) In accordance with §§ 63.7(b) and (c) and 63.9(b) and (h) of the General Provisions, you must submit the one-time notifications listed in paragraphs (b) through (g) of this section.

(b) As specified in § 63.9(b)(2), if you start up your affected source before February 27, 2002, you must submit an Initial Notification not later than June 27, 2002, or no later than 120 days after the source becomes subject to this subpart, whichever is later.

(c) In the Initial Notification, include the items in paragraphs (c)(1) through (4) of this section:

(1) The name and address of the owner or operator.

(2) The physical address of the leather finishing operation.

(3) Identification of the relevant standard, such as the Leather Finishing Operations NESHAP, and compliance date.

(4) A brief description of the source including the types of leather product process operations and nominal operating capacity.

(d) As specified in § 63.9(b)(1) and (2), if you startup your new or reconstructed affected source on or after February 27, 2002, you must submit an Initial Notification not later than 120 calendar days after you become subject to this subpart.

(e) If you are required to conduct a performance test, you must submit a Notification of Intent to Conduct a Performance Test at least 60 calendar days before the performance test is scheduled to begin as required in § 63.7(b)(1).

(f) You must submit a Notification of Compliance Status report not later than 60 calendar days after determining your initial 12-month compliance ratio. The notification of compliance status must contain the items in paragraphs (f)(1) through (5) of this section:

(1) The name and address of the owner or operator.

(2) The physical address of the leather finishing operation.

(3) Each type of leather product process operation performed during the previous 12 months.

(4) Each HAP identified under § 63.5390 in finishes applied during the 12-month period used for the initial compliance determination.

(5) A compliance status certification indicating whether the source complied with all of the requirements of this subpart throughout the 12-month period used for the initial source compliance determination. This certification must include the items in paragraphs (f)(5)(i) through (iii) of this section:

(i) The plan for demonstrating compliance, as described in § 63.5325, is complete and available on site for inspection.

(ii) You are following the procedures described in the plan for demonstrating compliance.

(iii) The compliance ratio value was determined to be less than or equal to 1.00, or the value was determined to be greater than 1.00.

(g) If your source becomes a major source on or after February 27, 2002, you must submit an initial notification

sfrattini on LAPJZKW1R2 with $$_JOB
VerDate Sep<11>2014 09:16 Apr 04, 2023 Jkt 256165 PO 00000 Frm 01124 Fmt 8010 Sfmt 8010 Q:\40\256165.XXX PC31

not later than 120 days after you become subject to this subpart.

[67 FR 9162, Feb. 27, 2002, as amended at 85 FR 73909, Nov. 19, 2020]

§ 63.5420 What reports must I submit and when?

(a) You must submit the first annual compliance status certification 12 months after you submit the Notification of Compliance Status. Each subsequent annual compliance status certification is due 12 months after the previous annual compliance status certification. The annual compliance status certification provides the compliance status for each month during the 12-month period ending 60 days prior to the date on which the report is due. Include the information in paragraphs (a)(1) through (5) of this section in the annual certification:

(1) The name and address of the owner or operator.

(2) The physical address of the leather finishing operation.

(3) Each type of leather product process operation performed during the 12-month period covered by the report.

(4) Each HAP identified under § 63.5390, in finishes applied during the 12-month period covered by the report.

(5) A compliance status certification indicating whether the source complied with all of the requirements of this subpart throughout the 12-month period covered by the report. This certification must include the items in paragraphs (a)(5)(i) and (ii) of this section:

(i) You are following the procedures described in the plan for demonstrating compliance.

(ii) The compliance ratio value was determined to be less than or equal to 1.00, or the value was determined to be greater than 1.00.

(b) You must submit a Deviation Notification Report for each compliance determination you make in which the compliance ratio exceeds 1.00, as determined under § 63.5330. Submit the deviation report by the fifteenth of the following month in which you determined the deviation from the compliance ratio. The Deviation Notification Report must include the items in paragraphs (b)(1) through (6) of this section:

(1) The name and address of the owner or operator.

(2) The physical address of the leather finishing operation.

(3) The 12-month period covered by the report and each type of leather product process operation performed during the 12-month period.

(4) The compliance ratio comprising the deviation. You may reduce the frequency of submittal of the Deviation Notification Report if the Administrator of these NESHAP approves an alternative schedule.

(5) An estimate of the quantity of HAP (in pounds) emitted during the 12 months specified in paragraph (b)(3) of this section in excess of the allowable HAP loss. Calculate this estimate of excess emissions by subtracting the allowable HAP loss determined as specified in § 63.5340 from the actual HAP loss determined as specified in § 63.5335.

(6) The cause of the events that resulted in the source failing to meet an applicable standard (including unknown cause, if applicable).

(c) Within 60 days after the date of completing each performance test (as defined in § 63.2) required by this subpart, you must submit the results of the performance test following the procedures specified in paragraphs (c)(1) through (3) of this section.

(1) For data collected using test methods supported by the EPA's Electronic Reporting Tool (ERT) as listed on the EPA's ERT website (*https://www.epa.gov/electronic-reporting-air-emissions/electronic-reporting-tool-ert*) at the time of the test, you must submit the results of the performance test to the EPA via the Compliance and Emissions Data Reporting Interface (CEDRI). The CEDRI Interface can be accessed through the EPA's Central Data Exchange (CDX) (*https://cdx.epa.gov/*). Performance test data must be submitted in a file format generated through the use of the EPA's ERT or an alternate electronic file format consistent with the extensible markup language (XML) schema listed on the EPA's ERT website.

(2) For data collected using test methods that are not supported by the EPA's ERT as listed on the EPA's ERT website at the time of the test, you must submit the results of the performance test to the Administrator at the appropriate address listed in § 63.13

sfrattini on LAPJZKW1R2 with $$_JOB
VerDate Sep<11>2014 09:16 Apr 04, 2023 Jkt 256165 PO 00000 Frm 01125 Fmt 8010 Sfmt 8010 Q:\40\256165.XXX PC31

unless the Administrator agrees to or specifies an alternate reporting method.

(3) If you claim that some of the performance test information being submitted under paragraph (c)(1) of this section is confidential business information (CBI), you must submit a complete file generated through the use of the EPA's ERT or an alternate electronic file consistent with the XML schema listed on the EPA's ERT website, including information claimed to be CBI, on a compact disc, flash drive or other commonly used electronic storage medium to the EPA. The electronic medium must be clearly marked as CBI and mailed to U.S. EPA/OAQPS/CORE CBI Office, Attention: Group Leader, Measurement Policy Group, MD C404–02, 4930 Old Page Rd., Durham, NC 27703. The same ERT or alternate file with the CBI omitted must be submitted to the EPA via the EPA's CDX as described in paragraph (c)(1) of this section.

(4) If you are required to electronically submit a report through the CEDRI in the EPA's CDX, and due to a planned or actual outage of either the EPA's CEDRI or CDX systems within the period of time beginning 5 business days prior to the date that the submission is due, you will be or are precluded from accessing CEDRI or CDX and submitting a required report within the time prescribed, you may assert a claim of EPA system outage for failure to timely comply with the reporting requirement. You must submit notification to the Administrator in writing as soon as possible following the date you first knew, or through due diligence should have known, that the event may cause or caused a delay in reporting. You must provide to the Administrator a written description identifying the date, time and length of the outage; a rationale for attributing the delay in reporting beyond the regulatory deadline to the EPA system outage; describe the measures taken or to be taken to minimize the delay in reporting; and identify a date by which you propose to report, or if you have already met the reporting requirement at the time of the notification, the date you reported. In any circumstance, the report must be submitted electronically as soon as possible after the outage is resolved. The decision to accept the claim of EPA system outage and allow an extension to the reporting deadline is solely within the discretion of the Administrator.

(5) If you are required to electronically submit a report through CEDRI in the EPA's CDX and a force majeure event is about to occur, occurs, or has occurred or there are lingering effects from such an event within the period of time beginning 5 business days prior to the date the submission is due, the owner or operator may assert a claim of force majeure for failure to timely comply with the reporting requirement. For the purposes of this section, a force majeure event is defined as an event that will be or has been caused by circumstances beyond the control of the affected facility, its contractors, or any entity controlled by the affected facility that prevents you from complying with the requirement to submit a report electronically within the time period prescribed. Examples of such events are acts of nature (*e.g.*, hurricanes, earthquakes, or floods), acts of war or terrorism, or equipment failure or safety hazard beyond the control of the affected facility (*e.g.*, large scale power outage). If you intend to assert a claim of force majeure, you must submit notification to the Administrator in writing as soon as possible following the date you first knew, or through due diligence should have known, that the event may cause or caused a delay in reporting. You must provide to the Administrator a written description of the force majeure event and a rationale for attributing the delay in reporting beyond the regulatory deadline to the force majeure event; describe the measures taken or to be taken to minimize the delay in reporting; and identify a date by which you propose to report, or if you have already met the reporting requirement at the time of the notification, the date you reported. In any circumstance, the reporting must occur as soon as possible after the force majeure event occurs. The decision to accept the claim of force majeure and allow an extension to the reporting

sfrattini on LAPJZKW1R2 with $$_JOB
VerDate Sep<11>2014 09:16 Apr 04, 2023 Jkt 256165 PO 00000 Frm 01126 Fmt 8010 Sfmt 8010 Q:\40\256165.XXX PC31

deadline is solely within the discretion of the Administrator.

[67 FR 9162, Feb. 27, 2002, as amended at 84 FR 3321, Feb. 12, 2019]

§ 63.5425 When must I start recordkeeping to determine my compliance ratio?

(a) If you have a new or reconstructed affected source, you must start recordkeeping to determine your compliance ratio according to one of the schedules listed in paragraphs (a)(1) and (2) of this section:

(1) If the startup of your new or reconstructed affected source is before February 27, 2002, then you must start recordkeeping to determine your compliance ratio no later than February 27, 2002.

(2) If the startup of your new or reconstructed affected source is after February 27, 2002, then you must start recordkeeping to determine your compliance ratio upon startup of your affected source.

(b) If you have an existing affected source, you must start recordkeeping to determine your compliance ratio no later than February 27, 2004.

(c) If you have a source that becomes a major source of HAP emissions after February 27, 2002, then you must start recordkeeping to determine your compliance ratio immediately upon submitting your Initial Notification, as required at § 63.5415(g).

§ 63.5430 What records must I keep?

You must satisfy the recordkeeping requirements in paragraphs (a) through (i) of this section by the compliance date specified in § 63.5295.

(a) You must keep the plan for demonstrating compliance as required at § 63.5325 onsite and readily available as long as the source is operational. If you make any changes to the plan for demonstrating compliance, then you must keep all previous versions of the plan and make them readily available for inspection for at least 5 years after each revision.

(b) You must keep a copy of each notification and report that you are required to submit in accordance with this subpart.

(c) You must keep records of performance tests in accordance with this subpart.

(d) You must record and maintain a continuous log of finish usage as specified at § 63.5335(b).

(e) You must maintain all necessary records to document the methods you used and the results of all HAP content measurements of each applied finish.

(f) For each leather product process operation, you must maintain a monthly log of the items listed in paragraphs (f)(1) and (2) of this section:

(1) Dates for each leather product process operation.

(2) Total surface area of leather processed for each leather product process operation.

(g) If you use an emission control device, you must keep records of monitoring data as specified at § 63.982(a)(2) (subpart SS of this part).

(h) In the event that the compliance ratio exceeded 1.00, as determined under § 63.5330, keep a record of the information specified in paragraphs (h)(1) through (5) of this section for each exceedance.

(1) The 12-month period in which the exceedance occurred, as reported in § 63.5420(b).

(2) Each type of leather product process operation performed during the 12-month period in which the exceedance occurred, as reported in § 63.5420(b).

(3) Estimate of the quantity of HAP (in pounds) emitted during the 12 months specified in § 63.5420(b)(3) in excess of the allowable HAP loss, as reported in § 63.5420(b).

(4) Cause of the events that resulted in the source failing to meet an applicable standard (including unknown cause, if applicable), as reported in § 63.5420(b).

(5) Actions taken to minimize emissions in accordance with § 63.5320(b), and any corrective actions taken to return the affected unit to its normal or usual manner of operation.

(i) Any records required to be maintained by this part that are submitted electronically via the EPA's CEDRI may be maintained in electronic format. This ability to maintain electronic copies does not affect the requirement for facilities to make records, data, and reports available

sfrattini on LAPJZKW1R2 with $$_JOB
VerDate Sep<11>2014 09:16 Apr 04, 2023 Jkt 256165 PO 00000 Frm 01127 Fmt 8010 Sfmt 8010 Q:\40\256165.XXX PC31

upon request to a delegated air agency or the EPA as part of an on-site compliance evaluation.

[67 FR 9162, Feb. 27, 2002, as amended at 84 FR 3322, Feb. 12, 2019]

§ 63.5435 In what form and how long must I keep my records?

(a) Your records must be in a form suitable and readily available for expeditious review according to § 63.10(b)(1).

(b) As specified in § 63.10(b)(1), you must keep each record for 5 years following the date of each occurrence, measurement, maintenance, corrective action, report, or record.

(c) You must keep each record onsite for at least 2 years after the date of each occurrence, measurement, maintenance, corrective action, report, or record according to § 63.10(b)(1). You can keep the records offsite for the remaining 3 years.

OTHER REQUIREMENTS AND INFORMATION

§ 63.5450 What parts of the General Provisions apply to me?

Table 2 of this subpart shows which parts of the General Provisions in §§ 63.1 through 63.15 apply to you.

§ 63.5455 Who administers this subpart?

(a) This subpart can be administered by us, the United States Environmental Protection Agency (U.S. EPA), or a delegated authority such as your State, local, or tribal agency. If the U.S. EPA Administrator has delegated authority to your State, local, or tribal agency, then that agency has the primary authority to administer and enforce this subpart. You should contact your U.S. EPA Regional Office to find out if the authority to implement and enforce this subpart is delegated to your State, local, or tribal agency.

(b) In delegating implementation and enforcement authority of this subpart to a State, local, or tribal agency under subpart E of this part, the authorities contained in paragraph (c) of this section are retained by the Administrator of U.S. EPA and are not transferred to the State, local, or tribal agency.

(c) The authorities that will not be delegated to State, local, or tribal agencies are listed in paragraphs (c)(1) through (4) of this section:

(1) Approval of alternatives to the emission standards in § 63.5305 under § 63.6(g).

(2) Approval of major alternatives to test methods under § 63.7(e)(2)(ii) and (f) and as defined in § 63.90.

(3) Approval of major alternatives to monitoring under § 63.8(f) and as defined in § 63.90.

(4) Approval of major alternatives to recordkeeping and reporting under § 63.10(f) and as defined in § 63.90.

§ 63.5460 What definitions apply to this subpart?

Terms used in this subpart are defined in the Clean Air Act, § 63.2, and in this section as follows:

Area source means any stationary source of hazardous air pollutants that is not a major source as defined in this part.

Compliance ratio means the ratio of the actual HAP loss from the previous 12 months to the allowable HAP loss from the previous 12 months. Equation 1 in § 63.5330 is used to calculate this value. If the value is less than or equal to 1.00, the source is in compliance. If the value is greater than 1.00, the source is deviating from compliance.

Deviation means any instance in which an affected source subject to this subpart, or an owner or operator of such a source fails to meet any requirement or obligation established by this subpart, including, but not limited to, any emission limits or work practice standards.

Drying means the process of removing all but equilibrium moisture from the leather. Drying methods currently in use include: toggling, hanging, pasting, and vacuum drying.

Finish add-on means the amount of solid material deposited on the leather substrate due to finishing operations. Typically, the solid deposition is a dye or other chemical used to enhance the color and performance of the leather. Finish add-on is quantified as mass per surface area of substrate, such as grams of finish add-on per square foot of leather substrate.

Hazardous air pollutants (HAP) means any substance or mixture of substances listed as a hazardous air pollutant

sfrattini on LAPJZKW1R2 with $$_JOB
VerDate Sep<11>2014 09:16 Apr 04, 2023 Jkt 256165 PO 00000 Frm 01128 Fmt 8010 Sfmt 8010 Q:\40\256165.XXX PC31

under section 112(b) of the Clean Air Act.

Leather means the pelt or hide of an animal which has been transformed by a tanning process into a nonputrescible and useful material.

Leather finishing means a single process or group of processes used to adjust and improve the physical and aesthetic characteristics of the leather surface through the multistage application of a coating comprised of dyes, pigments, film-forming materials, and performance modifiers dissolved or suspended in liquid carriers.

Leather substrate means a nonputrescible leather surface intended for the application of finishing chemicals and materials. The leather substrate may be a continuous piece of material such as side leather or may be a combination of smaller leather pieces and leather fibers, which when joined together, form an integral composite leather material.

Leather tanning means the processes, commonly referred to as wet operations, used to purify and stabilize the collagen content of the hide. Wet operations are divided into three phases, the beamhouse (includes soaking and unhairing); the tanyard (includes bating, pickling, tanning, trimming/siding, and splitting); and the coloring department (includes retanning, coloring, and atliquoring operations).

Month means that all references to a month in this subpart refer to a calendar month.

Nonwater-resistant leather means nonupholstery leather that is not treated with any type of waterproof finish and, thus, cannot withstand 5,000 Maeser Flexes with a Maeser Flex Testing Machine or a method approved by the Administrator prior to initial water penetration. This leather is typically used for dress shoes, handbags, and garments.

Product process operation means any one of the four leather production classifications developed for ease of compliance with this subpart. The four leather product process operations are as follows: upholstery leather with greater than or equal to 4 grams finish add-on per square foot, upholstery leather with less than 4 grams finish add-on per square foot, water-resistant/specialty leather, and nonwater-resistant leather.

Specialty leather means a select grade of chrome tanned, bark retanned, or fat liquored leather that is retanned through the application of grease, waxes, and oil in quantities greater than 12 percent of the dry leather weight or high-quality dress or performance shoe leather that can withstand one or more of the following visual tests: moisture injection into the leather using vacuum mulling without signs of blistering, or prolonged ironing at 200 °F for smoothing out surface roughness without finish lift off. Specialty leather is also finished with higher solvent-based finishes that provide rich color, luster, or an oily/tacky feel. Specialty leather products are generally low volume, high-quality leather, such as specialty shoe leather and top grade football leathers.

Upholstery leather (greater than or equal to 4 grams finish add-on per square foot) means an upholstery leather with a final finish add-on to leather ratio of 4 or more grams of finish per square foot of leather. These types of finishes are used primarily for automobile seating covers. These finishes tend to be aqueous-based.

Upholstery leather (less than 4 grams finish add-on per square foot) means an upholstery leather with a final finish add-on to leather ratio of less than 4 grams of finish per square foot of leather. These types of finishes are typically used for furniture seating covers. The finishes tend to be solvent-based and leave a thinner, softer, and more natural leather texture.

Vacuum mulling means the injection of water into the leather substrate using a vacuum process to increase the moisture content of the leather.

Water-resistant leather means nonupholstery leather that has been treated with one or more waterproof finishes such that the leather can withstand 5,000 or more Maeser Flexes with a Maeser Flex Testing Machine or a method approved by the Administrator prior to initial water penetration. This leather is used for outerwear, boots and outdoor applications.

[67 FR 9162, Feb. 27, 2002, as amended at 70 FR 6360, Feb. 7, 2005; 84 FR 3322, Feb. 12, 2019]

sfrattini on LAPJZKW1R2 with $$_JOB
VerDate Sep<11>2014 09:16 Apr 04, 2023 Jkt 256165 PO 00000 Frm 01129 Fmt 8010 Sfmt 8010 Q:\40\256165.XXX PC31

FIGURE 1 TO SUBPART TTTT OF PART 63—EXAMPLE LOGS FOR RECORDING LEATHER FINISH USE AND HAP CONTENT

Month:_____ Year:_____

FINISH INVENTORY LOG

Finish type	Finish usage (pounds)	HAP Content (mass fraction)	Date and time	Operator's name	Product process operation

MONTHLY SUMMARY OF FINISH USAGE

	Upholstery leather (≥4 grams)	Upholstery leather (<4 grams)	Water-resistant/ specialty leather	Nonwater-resistant leather
Number of Entries. Total Finish Usage (pounds). Total HAP Usage (pounds).				

TABLE 1 TO SUBPART TTTT OF PART 63—LEATHER FINISHING HAP EMISSION LIMITS FOR DETERMINING THE ALLOWABLE HAP LOSS

As required in §§ 63.5305 and 63.5340(b), you must meet the appropriate emission limits in the following table:

Type of Leather Product Process Operation	HAP Emission Limit (pounds of HAP loss per 1,000 square feet of leather processed)	
	Existing sources	New sources
1. Upholstery Leather (≥4 grams add-on/square feet)	2.6	0.5
2. Upholstery Leather (<4 grams add-on/square feet)	6.8	2.5
3. Water-resistant (≥5,000 Maeser Flexes)/Specialty Leather	5.6	4.9
4. Nonwater-resistant Leather (<5,000 Maeser Flexes)	3.7	2.1

TABLE 2 TO SUBPART TTTT OF PART 63—APPLICABILITY OF GENERAL PROVISIONS TO SUBPART TTTT

As required in § 63.5450, you must meet the appropriate NESHAP General Provision requirements in the following table:

General provisions citation	Subject of citation	Brief description of requirement	Applies to subpart	Explanation
§ 63.1	Applicability	Initial applicability determination; applicability after standard established; permit requirements; extensions, notifications..	Yes.	
§ 63.2	Definitions	Definitions for Part 63 standards.	Yes	Except as specifically provided in this subpart.
§ 63.3	Units and abbreviations.	Units and abbreviations for Part 63 standards.	Yes.	
§ 63.4	Prohibited activities and circumvention.	Prohibited activities; compliance date; circumvention, severability.	Yes.	
§ 63.5	Construction/reconstruction.	Applicability; applications; approvals.	Yes	Except for paragraphs of § 63.5 as listed below.
§ 63.5(c)	[Reserved]			

sfrattini on LAPJZKW1R2 with $$_JOB
VerDate Sep<11>2014 09:16 Apr 04, 2023 Jkt 256165 PO 00000 Frm 01130 Fmt 8010 Sfmt 8026 Q:\40\256165.XXX PC31

General provisions citation	Subject of citation	Brief description of requirement	Applies to subpart	Explanation
§ 63.5(d)(1)(ii)(H)	Application for approval.	Type and quantity of HAP, operating parameters..	No	All sources emit HAP. Subpart TTTT does not require control from specific emission points.
§ 63.5(d)(1)(i)	[Reserved].			
§ 63.5(d)(1)(iii), (d)(2), (d)(3)(ii).		Application for approval.	No	The requirements of the application for approval for new and reconstructed sources are described in § 63.5320(b). General provision requirements for identification of HAP emission points or estimates of actual emissions are not required. Descriptions of control and methods, and the estimated and actual control efficiency of such do not apply. Requirements for describing control equipment and the estimated and actual control efficiency of such equipment apply only to control equipment to which the subpart TTTT requirements for quantifying solvent destroyed by an add-on control device would be applicable.
§ 63.6	Applicability of general provisions.	Applicability of general provisions.	Yes	Except for paragraphs of § 63.6 as listed below.
§ 63.6(b)(1)–(3)	Compliance dates, new and reconstructed sources.		No	Section § 63.5283 specifies the compliance dates for new and reconstructed sources.
§ 63.6(b)(6)	[Reserved].			
§ 63.6(c)(3)–(4)	[Reserved].			
§ 63.6(d)	[Reserved].			
§ 63.6(e)(1)	Operation and maintenance requirements.		No	See § 63.5320(b) for general duty requirement.
§ 63.6(e)(2)	[Reserved]			
§ 63.6(e)(3)	Operation and maintenance requirements.	Startup, shutdown, and malfunction plan requirements.	No	Subpart TTTT does not have any startup, shutdown, and malfunction plan requirements.
§ 63.6(f)–(g)	Compliance with nonopacity emission standards except during SSM.	Comply with emission standards at all times except during SSM.	No	Subpart TTTT does not have nonopacity requirements.
§ 63.6(h)	Opacity/visible emission (VE) standards.		No	Subpart TTTT has no opacity or visual emission standards.
§ 63.6(i)	Compliance extension.	Procedures and criteria for responsible agency to grant compliance extension.	Yes.	

sfrattini on LAPJZKW1R2 with $$_JOB
VerDate Sep<11>2014 09:16 Apr 04, 2023 Jkt 256165 PO 00000 Frm 01131 Fmt 8010 Sfmt 8026 Q:\40\256165.XXX PC31

General provisions citation	Subject of citation	Brief description of requirement	Applies to subpart	Explanation
§ 63.6(j)	Presidential compliance exemption.	President may exempt source category from requirement to comply with subpart.	Yes.	
§ 63.7	Performance testing requirements.	Schedule, conditions, notifications and procedures.	Yes	Except for paragraphs of § 63.7 as listed below. Subpart TTTT requires performance testing only if the source applies additional control that destroys solvent. § 63.5311 requires sources to follow the performance testing guidelines of the General Provisions if a control is added.
§ 63.7(a)(2) (i) and (iii).	Performance testing requirements.	Applicability and performance dates.	No	§ 63.5310(a) of subpart TTTT specifies the requirements of performance testing dates for new and existing sources.
§ 63.7(e)(1)	Conduct of performance tests.	Defines representative conditions; provides an exemption from the standards for periods of startup, shutdown, and malfunction; requires that, upon request, the owner or operator shall make available to the Administrator such records as may be necessary to determine the conditions of performance tests.	No	See § 63.5380.
§ 63.8	Monitoring requirements.	Applicability, conduct of monitoring, operation and maintenance, quality control, performance evaluations, use of alternative monitoring method, reduction of monitoring data.	No	See § 63.5360(a)(2) for monitoring requirements.
§ 63.9	Notification requirements.	Applicability and State delegation.	Yes	Except for paragraphs of § 63.9 as listed below.
§ 63.9(e)	Notification of performance test.	Notify responsible agency 60 days ahead.	Yes	Applies only if performance testing is performed.
§ 63.9(f)	Notification of VE/opacity observations.	Notify responsible agency 30 days ahead.	No	Subpart TTTT has no opacity or visual emission standards.
§ 63.9(g)	Additional notifications when using a continuous monitoring system (CMS).	Notification of performance evaluation; notification using COMS data; notification that exceeded criterion for relative accuracy.	No	See § 63.5360(a)(2) for CMS requirements.

sfrattini on LAPJZKW1R2 with $$_JOB
VerDate Sep<11>2014 09:16 Apr 04, 2023 Jkt 256165 PO 00000 Frm 01132 Fmt 8010 Sfmt 8026 Q:\40\256165.XXX PC31

General provisions citation	Subject of citation	Brief description of requirement	Applies to subpart	Explanation
§ 63.9(h)	Notification of compliance status.	Contents	No	§ 63.5320(d) specifies requirements for the notification of compliance status.
§ 63.9(j)	Notification requirements.	Change in previous information.	Yes.	
§ 63.9(k)	Notification requirements.	Electronic reporting procedures.	Yes	Only as specified in § 63.9(j).
§ 63.10	Recordkeeping/reporting.	Schedule for reporting, record storage.	Yes	Except for paragraphs of § 63.10 as listed below.
§ 63.10(b)(2)	Recordkeeping	CMS recordkeeping; CMS records of startup, shutdown, and malfunction events.	No	See § 63.5360 for CMS recordkeeping requirements, except see § 63.5430(h) for CMS recordkeeping requirements if there is a deviation from the standard.
§ 63.10(c)	Recordkeeping	Additional CMS recordkeeping.	No	See § 63.5360(a)(2) for CMS recordkeeping requirements.
§ 63.10(d)(2)	Reporting	Reporting performance test results.	Yes	Applies only if performance testing is performed.
§ 63.10(d)(3)	Reporting	Reporting opacity or VE observations.	No	Subpart TTTT has no opacity or visible emission standards.
§ 63.10(d)(4)	Reporting	Progress reports	Yes	Applies if a condition of compliance extension.
§ 63.10(d)(5)	Reporting	Startup, shutdown, and malfunction reporting.	No	See § 63.5420(b) for reporting requirements if there is a deviation from the standard.
§ 63.10(e)	Reporting	Additional CMS reports.	No	See § 63.5360(a)(2) for monitoring requirements.
§ 63.11	Control device requirements.	Requirements for flares.	Yes	Applies only if your source uses a flare to control solvent emissions. Subpart TTTT does not require flares.
§ 63.12	State authority and delegations.	State authority to enforce standards.	Yes.	
§ 63.13	State/regional addresses.	Addresses where reports, notifications, and requests are sent.	Yes.	
§ 63.14	Incorporation by reference.	Test methods incorporated by reference.	Yes.	
§ 63.15	Availability of information and confidentiality.	Public and confidential information.	Yes.	

[84 FR 3322, Feb. 12, 2019, as amended at 85 FR 73909, Nov. 19, 2020]

Subpart UUUU—National Emission Standards for Hazardous Air Pollutants for Cellulose Products Manufacturing

SOURCE: 67 FR 40055, June 11, 2002, unless otherwise noted.

WHAT THIS SUBPART COVERS

§ 63.5480 What is the purpose of this subpart?

This subpart establishes emission limits, operating limits, and work practice standards for hazardous air pollutants (HAP) emitted from cellulose products manufacturing operations. Carbon disulfide, carbonyl sulfide, ethylene oxide, methanol, methyl chloride, propylene oxide, and toluene

sfrattini on LAPJZKW1R2 with $$_JOB
VerDate Sep<11>2014 09:16 Apr 04, 2023 Jkt 256165 PO 00000 Frm 01133 Fmt 8010 Sfmt 8010 Q:\40\256165.XXX PC31

are the HAP emitted in the greatest quantities from cellulose products manufacturing operations. This subpart also establishes requirements to demonstrate initial and continuous compliance with the emission limits, operating limits, and work practice standards.

§ 63.5485 Am I subject to this subpart?

You are subject to this subpart if you own or operate a cellulose products manufacturing operation that is located at a major source of HAP emissions.

(a) Cellulose products manufacturing includes both the Miscellaneous Viscose Processes source category and the Cellulose Ethers Production source category. The Miscellaneous Viscose Processes source category includes all of the operations that use the viscose process. These operations include the cellulose food casing, rayon, cellulosic sponge, and cellophane operations, as defined in § 63.5610. The Cellulose Ethers Production source category includes all of the cellulose ether operations, as defined in § 63.5610, that use the cellulose ether process.

(b) A major source of HAP is any stationary source or group of stationary sources located within a contiguous area and under common control that emits or has the potential to emit any single HAP at a rate of 9.1 megagrams per year (Mg/yr) (10 tons per year (tpy)) or more or any combination of HAP at a rate of 23 Mg/yr (25 tpy) or more.

(c) The provisions of this subpart do not apply to research and development facilities, as defined in section 112(b)(7) of the Clean Air Act (CAA), regardless of whether the facilities are located at the same plant site as an operation subject to the provisions of this subpart.

(d) For cellulose ether operations, the applicability provisions in paragraph (d)(1) or (2) of this section apply.

(1) The applicability provisions in §§ 63.100(a) through (f) and 63.160 apply if you are complying with the equipment leak provisions of subpart H of this part.

(2) The applicability provisions in § 63.1019 apply if you are complying with the equipment leak provisions in subpart UU of this part.

(e) For cellulose ether operations, the applicability provisions in §§ 63.100(a) through (f) and 63.110(a), (e) and (h) apply if you are complying with the wastewater provisions in subparts F and G of this part.

§ 63.5490 What parts of my plant does this subpart cover?

(a) This subpart applies to each new, reconstructed, or existing affected source for the Miscellaneous Viscose Processes and Cellulose Ethers Production source categories.

(b) The affected source for the Miscellaneous Viscose Processes source category is each cellulose food casing, rayon, cellulosic sponge, or cellophane operation, as defined in § 63.5610. The affected source for the Cellulose Ethers Production source category is each cellulose ether operation, as defined in § 63.5610.

(c) You must consider storage vessels to be part of your process unit, as defined in § 63.5610, under either of the conditions described in paragraphs (c)(1) and (2) of this section. Otherwise, you may assign your storage vessels according to paragraph (c)(3) or (4) of this section.

(1) The input to the storage vessel from your viscose process or cellulose ether process (either directly or through other storage vessels assigned to your process unit) is greater than or equal to the input from any other process.

(2) The output from the storage vessel to your viscose process or cellulose ether process (either directly or through other storage vessels assigned to your process unit) is greater than or equal to the output to any other process.

(3) If the greatest input to and/or output from a shared storage vessel is the same for two or more processes, including at least one viscose process or cellulose ether process, you may assign the storage vessel to any process unit that has the greatest input or output.

(4) If the use varies from year to year, then you must base the determination on the utilization that occurred during the year preceding June 11, 2002 or, if the storage vessel was not operating during that year, you must base the use on the expected use for the

sfrattini on LAPJZKW1R2 with $$_JOB
VerDate Sep<11>2014 09:16 Apr 04, 2023 Jkt 256165 PO 00000 Frm 01134 Fmt 8010 Sfmt 8010 Q:\40\256165.XXX PC31

first 5-year period after startup. You must include this determination in the Notification of Compliance Status Report specified in Table 7 to this subpart.

(d) An affected source is a new affected source if you began construction of the affected source after August 28, 2000 and you met the applicability criteria in § 63.5485 at the time you began construction.

(e) An affected source is reconstructed if you meet the criteria as defined in § 63.2.

(f) An affected source is existing if it is not new or reconstructed.

(g) For the purposes of this subpart, the definitions of new and existing affected source in paragraphs (d) through (f) of this section supersede the definitions of new and existing affected source in subparts F, G, H, U and UU of this part.

[67 FR 40055, June 11, 2002, as amended at 70 FR 46692, Aug. 10, 2005]

§ 63.5495 When do I have to comply with this subpart?

(a) If you have a new or reconstructed affected source, then you must comply with this subpart according to the requirements in paragraphs (a)(1) and (2) of this section.

(1) If you start up your affected source before June 11, 2002, then you must comply with the emission limits, operating limits, and work practice standards for new and reconstructed sources in this subpart no later than June 11, 2002.

(2) If you start up your affected source after June 11, 2002, then you must comply with the emission limits, operating limits, and work practice standards for new and reconstructed sources in this subpart upon startup of your affected source.

(b) If you have an existing affected source, then you must comply with this subpart according to the requirements in paragraphs (b)(1) and (2) of this section.

(1) Cellulose food casing, cellulosic sponge, cellophane, and cellulose ether operations must comply with the emission limits, operating limits, and work practice standards for existing sources in this subpart no later than June 13, 2005.

(2) Rayon operations must comply with this subpart according to the requirements in paragraphs (b)(2)(i) through (iii) of this section.

(i) Rayon operations must comply with the 35 percent reduction emission limit and associated operating limits and work practice standards for existing sources in this subpart no later than June 13, 2005.

(ii) Rayon operations must comply with the work practice standard for carbon disulfide unloading and storage operations for existing sources in this subpart no later than June 13, 2005.

(iii) Rayon operations must comply with the 40 percent reduction emission limit and associated operating limits and work practice standards for existing sources in this subpart no later than June 11, 2010.

(c) If you have an area source that increases its emissions or its potential to emit so that it becomes a major source of HAP and an affected source subject to this subpart, then the requirements in paragraphs (c)(1) and (2) of this section apply.

(1) An area source that meets the criteria of a new affected source, as specified in § 63.5490(d), or a reconstructed affected source, as specified in § 63.5490(e), must be in compliance with this subpart upon becoming a major source.

(2) An area source that meets the criteria of an existing affected source, as specified in § 63.5490(f), must be in compliance with this subpart no later than 3 years after it becomes a major source.

(d) You must meet the notification requirements in § 63.5575 and in subpart A of this part. Some of the notifications must be submitted before you are required to comply with the emission limits, operating limits, and work practice standards in this subpart.

(e) For the purposes of this subpart, the compliance dates in this section supersede the compliance dates in subparts F, G, H, U and UU of this part.

sfrattini on LAPJZKW1R2 with $$_JOB
VerDate Sep<11>2014 09:16 Apr 04, 2023 Jkt 256165 PO 00000 Frm 01135 Fmt 8010 Sfmt 8010 Q:\40\256165.XXX PC31

EMISSION LIMITS, OPERATING LIMITS, AND WORK PRACTICE STANDARDS

§ 63.5505 What emission limits, operating limits, and work practice standards must I meet?

(a) You must meet each emission limit and work practice standard in Table 1 to this subpart that applies to you.

(b) You must meet each operating limit in Table 2 to this subpart that applies to you.

(c) As provided in § 63.6(g), you may apply to EPA for permission to use an alternative to the work practice standards in this section.

(d) Opening of a safety device, as defined in § 63.5610, is allowed at any time that conditions require venting to avoid unsafe conditions.

(e) The emission limits in Table 1 to this subpart used to control emissions from storage vessels do not apply during periods of planned routine maintenance. Periods of planned routine maintenance of each control device, during which the control device does not meet the emission limit specified in Table 1 to this subpart, must not exceed 240 hours per year.

(f) Carbon disulfide storage tanks part of a submerged unloading and storage operation subject to this part are not subject to 40 CFR part 60, subpart Kb (Standards of Performance for Volatile Organic Liquid Storage Vessels (Including Petroleum Liquid Storage Vessels) for Which Construction, Reconstruction, or Modification Commenced After July 23, 1984).

[67 FR 40055, June 11, 2002, as amended at 85 FR 39994, July 2, 2020]

GENERAL COMPLIANCE REQUIREMENTS

§ 63.5515 What are my general requirements for complying with this subpart?

(a) On or before December 29, 2020, for each existing source (and for each new or reconstructed source for which construction or reconstruction commenced on or before September 9, 2019), you must be in compliance with the emission limits, operating limits, and work practice standards in this subpart at all times, except during periods of startup, shutdown, and malfunction. After December 29, 2020, for each existing source (and for each new or reconstructed source for which construction or reconstruction commenced on or before September 9, 2019), you must be in compliance with the emission limitations in this subpart at all times. For new and reconstructed sources for which construction or reconstruction commenced after September 9, 2019, you must be in compliance with the emission limits, operating limits, and work practice standards in this subpart at all times on July 2, 2020, or immediately upon startup, whichever is later.

(b) On or before December 29, 2020, for each existing source (and for each new or reconstructed source for which construction or reconstruction commenced on or before September 9, 2019), you must always operate and maintain your affected source, including air pollution control and monitoring equipment, according to the provisions in § 63.6(e)(1)(i). After December 29. 2020, for each existing source (and for each new or reconstructed source for which construction or reconstruction commenced on or before September 9, 2019), and after September 9, 2019, for new and reconstructed sources for which construction or reconstruction commenced after September 9, 2019, you must always operate and maintain your affected source, including air pollution control and monitoring equipment in a manner consistent with good air pollution control practices for minimizing emissions at least to the levels required by this subpart. The general duty to minimize emissions does not require you to make any further efforts to reduce emissions if levels required by the applicable standard have been achieved. Determination of whether a source is operating in compliance with operation and maintenance requirements will be based on information available to the Administrator which may include, but is not limited to, monitoring results, review of operation and maintenance procedures, review of operation and maintenance records, and inspection of the source.

(1) During the period, if any, between the compliance date specified for your affected source in § 63.5495 and the date

sfrattini on LAPJZKW1R2 with $$_JOB
VerDate Sep<11>2014 09:16 Apr 04, 2023 Jkt 256165 PO 00000 Frm 01136 Fmt 8010 Sfmt 8010 Q:\40\256165.XXX PC31

upon which continuous monitoring systems (CMS) have been installed and validated and any applicable operating limits have been set, you must maintain a log detailing the operation and maintenance of any control technique used to comply with this subpart.

(2) [Reserved]

(c) On or before December 29 2020, for each existing source (and for each new or reconstructed source for which construction or reconstruction commenced on or before September 9, 2019), you must maintain a written startup, shutdown, and malfunction (SSM) plan according the provisions in § 63.6(e)(3). For each such source, a SSM plan is not required after December 29, 2020. No SSM plan is required for any new or reconstruction source for which construction or reconstruction commenced after September 9, 2019.

(d) After you treat a wastewater stream according to the provisions of subparts F and G of this part, it is no longer subject to this subpart.

(e) If you use a boiler or process heater to comply with an emission limit or work practice standard in Table 1 to this subpart, then the vent stream must be introduced into the flame zone of the boiler or process heater.

(f) You are not required to conduct a performance test when you use any of the units specified in paragraphs (f)(1) through (5) of this section to comply with the applicable emission limit or work practice standard in table 1 to this subpart. You are also exempt from the continuous compliance, reporting, and recordkeeping requirements specified in tables 5 through 9 to this subpart for any of these units. This exemption applies to units used as control devices or wastewater treatment units.

(1) A boiler or process heater with a design heat input capacity of 44 megawatts or greater;

(2) A boiler or process heater into which the vent stream is introduced with the primary fuel or is used as the primary fuel;

(3) A boiler or process heater burning hazardous waste that meets the requirements in paragraph (f)(3)(i) or (ii) of this section.

(i) The boiler or process heater has been issued a final permit under 40 CFR part 270 and complies with the requirements of 40 CFR part 266, subpart H; or

(ii) The boiler or process heater has certified compliance with the interim status requirements of 40 CFR part 266, subpart H.

(4) A hazardous waste incinerator that has been issued a final permit under 40 CFR part 270 and that complies with the requirements of 40 CFR part 264, subpart O, or that has certified compliance with the interim status requirements of 40 CFR part 265, subpart O.

(5) A control device for which a performance test was conducted for determining compliance with a rule promulgated by EPA and the test was conducted using the same test methods specified in Table 4 to this subpart and either you have made no deliberate process changes since the test, or you can demonstrate that the results of the performance test with or without adjustments, reliably demonstrate compliance despite process changes.

(g) For purposes of meeting any of the emission limits in Table 1 to this subpart, you may use either a single control technique or any combination of control techniques, as defined in § 63.5610.

(h) You must be in compliance with the provisions of subpart A of this part, except as noted in Table 10 to this subpart.

[67 FR 40055, June 11, 2002, as amended at 70 FR 46692, Aug. 10, 2005; 71 FR 20466, Apr. 20, 2006; 85 FR 39994, July 2, 2020]

TESTING AND INITIAL COMPLIANCE REQUIREMENTS

§ 63.5530 How do I demonstrate initial compliance with the emission limits and work practice standards?

(a) You must demonstrate initial compliance with each emission limit and work practice standard that applies to you according to Table 3 to this subpart. You must also install and operate the monitoring equipment according to the requirements in § 63.5545 that apply to you.

(b) You must establish each site-specific operating limit in Table 2 to this subpart that applies to you according to the requirements in § 63.5535 and Table 4 to this Subpart UUUU.

sfrattini on LAPJZKW1R2 with $$_JOB
VerDate Sep<11>2014 09:16 Apr 04, 2023 Jkt 256165 PO 00000 Frm 01137 Fmt 8010 Sfmt 8010 Q:\40\256165.XXX PC31

(c) You must submit the Notification of Compliance Status Report containing the results of the initial compliance demonstration according to the requirements in § 63.5575 and Table 7 to this Subpart UUUU.

§ 63.5535 What performance tests and other procedures must I use?

(a) You must conduct each performance test in Table 4 to this Subpart UUUU that applies to you.

(b) You must conduct each performance test for continuous process vents and combinations of batch and continuous process vents based on representative performance (*i.e.*, performance based on normal operating conditions) of the affected source for the period being tested, according to the specific conditions in Table 4 to this subpart. Representative conditions exclude periods of startup and shutdown. You may not conduct performance tests during periods of malfunction. You must record the process information that is necessary to document operating conditions during the test and include in such record an explanation to support that such conditions represent normal operation. Upon request, you shall make available to the Administrator such records as may be necessary to determine the conditions of performance tests.

(c) [Reserved]

(d) You must conduct three separate test runs for each performance test required in this section, as specified in § 63.7(e)(3). Each test run must last at least 1 hour, except as specified in § 63.490(c) for batch process vents.

(e) Except as specified in § 63.490(c) for batch process vents, you may use the equations in paragraphs (e)(1) through (3) of this section as applicable to determine the control efficiency for each performance test.

(1) The total organic HAP emission rate is the sum of the emission rates of the individual HAP components. You must calculate the total organic HAP emission rate at the inlet and outlet of each control device for each test run using Equation 1 of this section:

$$ER_{HAP_t} = \sum_{j=1}^{m} ER_{HAP_j} \qquad \text{(Eq. 1)}$$

Where:

ER_{HAP_t} = total emission rate of organic HAP in vent stream, kilograms per hour (kg/hr) (pounds per hour (lb/hr)).

ER_{HAP_j} = emission rate of individual organic HAP in vent stream, kg/hr (lb/hr).

j = individual HAP.

m = number of individual HAP sampled in each test run.

(2) The total sulfide emission rate is the sum of the emission rates of the individual sulfide components, expressed as carbon disulfide. You must calculate the total sulfide emission rate at the inlet and outlet of each control device for each test run using Equation 2 of this section:

$$ER_{sulf_t} = ER_{CS_2} + \left(ER_{H_2S^*} \frac{M_{CS_2}}{M_{H_2S}} \right) + \left(ER_{COS^*} \frac{M_{CS_2}}{M_{COS}} \right) \qquad \text{(Eq. 2)}$$

Where:

ER_{sulf_t} = total emission rate of sulfide in vent stream, kg/hr (lb/hr), as carbon disulfide.

ER_{CS_2} = emission rate of carbon disulfide in vent stream, kg/hr (lb/hr).

ER_{H_2S} = emission rate of hydrogen sulfide in vent stream, kg/hr (lb/hr).

M_{CS_2} = mass of carbon disulfide per mole of carbon disulfide, 76 kilograms per kilogram-mole (kg/kg-mol) (76 pounds per pound-mole (lb/lb-mol)).

M_{H_2S} = mass of hydrogen sulfide per mole of carbon disulfide, 68 kg/kg-mol (68 lb/lb-mol).

ER_{COS} = emission rate of carbonyl sulfide in vent stream, kg/hr (lb/hr).

M_{COS} = mass of carbonyl sulfide per mole of carbon disulfide, 120 kg/kg-mol (120 lb/lb-mol).

(3) You must calculate the control efficiency for each control device for each test run using Equation 3 of this section:

sfrattini on LAPJZKW1R2 with $$_JOB
VerDate Sep<11>2014 09:16 Apr 04, 2023 Jkt 256165 PO 00000 Frm 01138 Fmt 8010 Sfmt 8010 Q:\40\256165.XXX PC31
ER11JN02.004</GPH> ER11JN02.005</GPH>

$$CE = \frac{ER_i - ER_o}{ER_i}(100\%) \qquad \text{(Eq. 3)}$$

Where:

CE = control efficiency, percent.

ER_i = total emission rate of organic HAP (ER_{HAP_i}) or sulfide (ER_{sulf_i}) in the inlet vent stream of the control device, kg/hr (lb/hr).

ER_o = total emission rate of organic HAP (ER_{HAP_i}) or sulfide (ER_{sulf_i}) in the outlet vent stream of the control device, kg/hr (lb/hr).

(f) When a flare is used to comply with the applicable emission limit or work practice standard in Table 1 to this subpart, you must comply with the requirements in paragraphs (f)(1) through (3) of this section. You are not required to conduct a performance test to determine the control efficiency of the flare or the outlet organic HAP concentration. If you have previously conducted a compliance demonstration for a flare using the techniques specified in paragraphs (f)(1) through (3) of this section, you may use that compliance demonstration to satisfy the requirements of this paragraph if either no deliberate process changes have been made since the compliance demonstration, or the results of the compliance demonstration reliably demonstrate compliance despite process changes.

(1) Conduct a visible emission test using the techniques specified in § 63.11(b)(4);

(2) Determine the net heating value of the gas being combusted using the techniques specified in § 63.11(b)(6); and

(3) Determine the exit velocity using the techniques specified in either § 63.11(b)(7) or (b)(8), as appropriate.

(g) Viscose process affected sources must conduct a month-long initial compliance demonstration according to the requirements in paragraphs (g)(1) through (5) of this section and Table 3 to this subpart.

(1) Viscose process affected sources that must use non-recovery control devices to meet the applicable emission limit in table 1 to this subpart must conduct an initial performance test of their non-recovery control devices according to the requirements in table 4 to this subpart to determine the control efficiency of their non-recovery control devices and incorporate this information in their material balance. Periodic performance tests must be conducted as specified in § 63.5541.

(2) Viscose process affected sources that use recovery devices to meet the applicable emission limit in Table 1 to this subpart must determine the quantity of carbon disulfide fed to the process and the quantity of carbon disulfide recovered using the recovery device and incorporate this information in their material balance.

(3) Viscose process affected sources that use viscose process changes to meet the applicable emission limit in Table 1 to this subpart must determine the quantity of carbon disulfide used before and after the process change and incorporate this information in their material balance.

(4) Cellophane operations that use recovery devices to meet the 95 percent toluene emission limit in Table 1 to this subpart must determine the quantity of toluene fed to the process and the toluene recovered using the solvent recovery device and incorporate this information in their material balance.

(5) Using the pertinent material balance information obtained according to paragraphs (g)(1) through (4) of this section, viscose process affected sources must calculate the monthly average percent reduction for their affected source over the month-long period of the compliance demonstration.

(h) Cellulose ether affected sources using the material balance compliance demonstration must conduct a month-long initial compliance demonstration according to the requirements in paragraphs (h)(1) through (4) of this section and table 3 to this subpart.

(1) Cellulose ether affected sources that must use non-recovery control devices to meet the applicable emission limit in table 1 to this subpart must conduct an initial performance test of their non-recovery control devices according to the requirements in table 4 to this subpart to determine the control efficiency of their non-recovery control devices and incorporate this information in their material balance. Periodic performance tests must be conducted as specified in § 63.5541.

(2) Cellulose ether affected sources that use recovery devices to meet the

sfrattini on LAPJZKW1R2 with $$_JOB
VerDate Sep<11>2014 09:16 Apr 04, 2023 Jkt 256165 PO 00000 Frm 01139 Fmt 8010 Sfmt 8010 Q:\40\256165.XXX PC31
ER11JN02.006</GPH>

applicable emission limit in table 1 to this subpart must determine the quantity of organic HAP fed to the process and the quantity of organic HAP recovered using the recovery device and incorporate this information in their material balance.

(3) Cellulose ether affected sources that use cellulose ether process changes to meet the applicable emission limit in table 1 to this subpart must determine the quantity of organic HAP used before and after the process change and incorporate this information in their material balance. For cellulose ether affected sources that use extended cookout, the start point from which the percent reduction is determined must be the onset of extended cookout.

(4) Using the pertinent material balance information obtained according to paragraphs (h)(1) through (3) of this section, cellulose ether affected sources must calculate the monthly average percent reduction for their affected source over the month-long period of the compliance demonstration.

(i) During the period of each compliance demonstration, you must establish each site-specific operating limit in table 2 to this subpart that applies to you according to the requirements in paragraphs (i)(1) through (9) of this section.

(1) For continuous, batch, and combinations of continuous and batch process vents, establish your site-specific operating limit using the procedures in § 63.505(c), except that, if you demonstrate initial compliance using a month-long compliance demonstration, references to ''performance test'' mean ''compliance demonstration'' for purposes of this subpart.

(2) For condensers, record the outlet (product side) gas or condensed liquid temperature averaged over the same period as the compliance demonstration while the vent stream is routed and constituted normally. Locate the temperature sensor in a position that provides a representative temperature.

(3) For thermal oxidizers, record the firebox temperature averaged over the same period as the compliance demonstration. Locate the temperature sensor in a position that provides a representative temperature.

(4) For water scrubbers, record the range of the pressure drop and flow rate of the scrubber liquid over the same time period as the compliance demonstration while the vent stream is routed and constituted normally. Locate the pressure and flow sensors in a position that provides a representative measurement of the parameter.

(5) For caustic scrubbers, record the range of the pressure drop, flow rate of the scrubber liquid, and pH, conductivity, or alkalinity of the scrubber liquid over the same time period as the compliance demonstration while the vent stream is routed and constituted normally. Locate the pressure sensors, flow sensors, and pH, conductivity, or alkalinity sensors in positions that provide representative measurements of these parameters. Ensure the sample is properly mixed and representative of the fluid to be measured.

(6) For flares, record the presence of a pilot flame. Locate the pilot flame sensor in a position that provides an accurate and continuous determination of the presence of the pilot flame.

(7) For biofilters, record the pressure drop across the biofilter beds, inlet gas temperature, and effluent pH or conductivity averaged over the same time period as the compliance demonstration while the vent stream is routed and constituted normally. Locate the pressure, temperature, and pH or conductivity sensors in positions that provide representative measurement of these parameters. Ensure the sample is properly mixed and representative of the fluid to be measured.

(8) For carbon adsorbers, record the total regeneration stream mass or volumetric flow during each carbon bed regeneration cycle during the period of the compliance demonstration. Record the temperature of the carbon bed after each carbon bed regeneration cycle during the period of the compliance demonstration (and within 15 minutes of completion of any cooling cycle(s)). Record the operating time since the end of the last carbon bed regeneration cycle and the beginning of the next carbon bed regeneration cycle during the period of the compliance demonstration. Locate the temperature

sfrattini on LAPJZKW1R2 with $$_JOB
VerDate Sep<11>2014 09:16 Apr 04, 2023 Jkt 256165 PO 00000 Frm 01140 Fmt 8010 Sfmt 8010 Q:\40\256165.XXX PC31

and flow sensors in positions that provide representative measurement of these parameters.

(9) For oil absorbers, record the flow of absorption liquid through the absorber, the temperatures of the absorption liquid before and after the steam stripper, and the steam flow through the steam stripper averaged during the same period of the compliance demonstration. Locate the temperature and flow sensors in positions that provide representative measurement of these parameters.

[67 FR 40055, June 11, 2002, as amended at 70 FR 46692, Aug. 10, 2005; 85 FR 39995, July 2, 2020]

§ 63.5540 By what date must I conduct a performance test or other initial compliance demonstration?

(a) You must conduct performance tests or other initial compliance demonstrations no later than 180 calendar days after the compliance date that is specified for your source in § 63.5495 and according to the provisions in § 63.7(a)(2).

§ 63.5541 When must I conduct subsequent performance tests?

(a) For each affected source utilizing a non-recovery control device to comply with § 63.5515 that commenced construction or reconstruction before September 9, 2019, a periodic performance test must be performed by July 2, 2023, and subsequent tests no later than 60 months thereafter.

(b) For each affected source utilizing a non-recovery control device to comply with § 63.5515 that commences construction or reconstruction after September 9, 2019, a periodic performance test must be performed no later than 60 months after the initial performance test required by § 63.5535, and subsequent tests no later than 60 months thereafter.

[85 FR 39995, July 2, 2020]

§ 63.5545 What are my monitoring installation, operation, and maintenance requirements?

(a) For each CMS required in this section, you must develop and make available for inspection by the permitting authority, upon request, a site-specific monitoring plan that addresses the provisions in paragraphs (a)(1) through (3) of this section.

(1) Installation of the CMS sampling probe or other interface at a measurement location relative to each affected process unit such that the measurement is representative of control of the exhaust emissions (e.g., on or downstream of the last control device);

(2) Performance and equipment specifications for the sample interface, the pollutant concentration or parametric signal analyzer, and the data collection and reduction system; and

(3) Performance evaluation procedures and acceptance criteria (e.g., calibrations).

(b) In your site-specific monitoring plan, you must also address the provisions in paragraphs (b)(1) through (3) of this section.

(1) Ongoing operation and maintenance procedures in accordance with the general requirements of §§ 63.8(c)(3) and (4)(ii), 63.5515(b), and 63.5580(c)(6);

(2) Ongoing data quality assurance procedures in accordance with the general requirements of § 63.8(d)(2); and

(3) Ongoing recordkeeping and reporting procedures in accordance with the general requirements of §§ 63.10(c), (e)(1), (e)(2)(i) and 63.5585.

(c) You must conduct a performance evaluation of each CMS in accordance with your site-specific monitoring plan.

(d) You must operate and maintain the CMS in continuous operation according to the site-specific monitoring plan.

(e) For each continuous emissions monitoring system (CEMS), you must meet the requirements in paragraphs (e)(1) through (6) of this section.

(1) Each CEMS must be installed, operated, and maintained according to the applicable performance specification (PS) listed in paragraphs (e)(1)(i) through (iv) of this section:

(i) PS–7 of 40 CFR part 60, appendix B, for CEMS used to measure hydrogen sulfide emissions;

(ii) PS–8 of 40 CFR part 60, appendix B, for CEMS used to measure volatile organic compound emissions;

(iii) PS–9 of 40 CFR part 60, appendix B, for CEMS that use gas chromatography to measure organic HAP emissions; and

sfrattini on LAPJZKW1R2 with $$_JOB
VerDate Sep<11>2014 09:16 Apr 04, 2023 Jkt 256165 PO 00000 Frm 01141 Fmt 8010 Sfmt 8010 Q:\40\256165.XXX PC31

(iv) PS–15 of 40 CFR part 60, appendix B, for CEMS that use Fourier transform infrared spectroscopy to measure organic HAP emissions.

(2) You must conduct a performance evaluation of each CEMS according to the requirements in § 63.8, Procedure 1 of 40 CFR part 60, appendix F, and according to the applicable performance specification listed in paragraphs (e)(1)(i) through (iv) of this section.

(3) As specified in § 63.8(c)(4)(ii), each CEMS must complete a minimum of one cycle of operation (sampling, analyzing, and data recording) for each successive 15-minute period.

(4) The CEMS data must be reduced to operating data averages computed using valid data from at least 75 percent of the hours during the averaging period. To have a valid hour of data, you must have four or more data points equally spaced over the 1-hour period (or at least two data points during an hour when calibration, quality assurance, or maintenance activities are being performed), except as specified in paragraph (e)(5) of this section.

(5) The CEMS data taken during periods in which the control devices are not functioning in controlling emissions, as indicated by periods of no flow for all or a portion of an affected source, must not be considered in the averages.

(6) Determine the daily average of all recorded readings for each operating day during the semiannual reporting period described in Table 8 to this subpart.

(f) For each continuous parameter monitoring system (CPMS), you must meet the requirements in paragraphs (f)(1) through (9) of this section.

(1) Satisfy all requirements of performance specifications for CPMS upon promulgation of such performance specifications.

(2) Satisfy all requirements of quality assurance (QA) procedures for CPMS upon promulgation of such QA procedures.

(3) The CPMS must complete a minimum of one cycle of operation for each successive 15-minute period.

(4) To calculate a valid hourly average, there must be at least four equally spaced values for that hour, excluding data collected during the periods described in paragraph (f)(6) of this section.

(5) Have valid hourly data for at least 75 percent of the hours during the averaging period.

(6) The CPMS data taken during periods in which the control devices are not functioning in controlling emissions, as indicated by periods of no flow for all or a portion of an affected source, must not be considered in the averages.

(7) Calculate a daily average using all of the valid hourly averages for each operating day during the semiannual reporting period.

(8) Record the results of each inspection, calibration, and validation check.

(9) Except for redundant sensors, any device that is used to conduct an initial validation or accuracy audit of a CPMS must meet the accuracy requirements specified in paragraphs (f)(9)(i) and (ii) of this section.

(i) The device must have an accuracy that is traceable to National Institute of Standards and Technology (NIST) standards.

(ii) The device must be at least three times as accurate as the required accuracy for the CPMS.

(g) If flow to a control device could be intermittent, you must install, calibrate, and operate a flow indicator at the inlet or outlet of the control device to identify periods of no flow.

[67 FR 40055, June 11, 2002, as amended at 70 FR 46693, Aug. 10, 2005; 85 FR 39995, July 2, 2020]

CONTINUOUS COMPLIANCE REQUIREMENTS

§ 63.5555 How do I demonstrate continuous compliance with the emission limits, operating limits, and work practice standards?

(a) You must demonstrate continuous compliance with each emission limit, operating limit, and work practice standard in Tables 1 and 2 to this subpart that applies to you according to methods specified in Tables 5 and 6 to this subpart.

(b) You must report each instance in which you were not in continuous compliance (as specified in Tables 5 and 6 to this subpart) with each emission limit, each operating limit, and each work practice standard that apply to you. This includes periods of startup,

sfrattini on LAPJZKW1R2 with $$_JOB
VerDate Sep<11>2014 09:16 Apr 04, 2023 Jkt 256165 PO 00000 Frm 01142 Fmt 8010 Sfmt 8010 Q:\40\256165.XXX PC31

shutdown, and malfunction. These instances are deviations from the emission limits, operating limits, and work practice standards in this subpart. These deviations must be reported according to the requirements in §63.5580.

(c) [Reserved]

(d) For each affected source that commenced construction or reconstruction before September 9, 2019, on or before December 29, 2020, deviations that occur during a period of startup, shutdown, or malfunction are not violations if you demonstrate to the Administrator's satisfaction that you were operating in accordance with §63.5515(b). The Administrator will determine whether deviations that occur on or before December 29, 2020, and during a period you identify as a startup, shutdown, or malfunction are violations, according to the provisions in §63.5515(b). This section no longer applies after December 30, 2020. For new sources that commence construction or reconstruction after September 9, 2019, this section does not apply.

[67 FR 40055, June 11, 2002, as amended at 71 FR 20466, Apr. 20, 2006; 85 FR 39995, July 2, 2020]

§63.5560 How do I monitor and collect data to demonstrate continuous compliance?

(a) You must monitor and collect data according to this section.

(b) Except for monitor malfunctions, associated repairs, and required quality assurance or control activities (including, as applicable, calibration checks and required zero and span adjustments), you must monitor continuously (or collect data at all required intervals) at all times that the affected source is operating, including periods of startup, shutdown, and malfunction.

(c) You may not use data recorded during monitoring malfunctions, associated repairs, required quality assurance or control activities, and periods of no flow for all or a portion of an affected source in data averages and calculations used to report emission or operating levels, nor may such data be used in fulfilling a minimum data availability requirement, if applicable. You must use all the data collected during all other periods in assessing the operation of the control device and associated control system.

(d) All terms in this subpart that define a period of time for completing required tasks (e.g., weekly, monthly, quarterly, or annually) refer to the standard calendar periods.

(1) You may change time periods specified in this subpart for completing required tasks by mutual agreement with the Administrator, as specified in subpart A of this part. For example, a period could begin on the compliance date or another date, rather than on the first day of the standard calendar period. For each time period that is changed by agreement, the revised period must remain in effect until it is changed. A new request is not necessary for each recurring period.

(2) Where the period specified for compliance is a standard calendar period, if the initial compliance date occurs after the beginning of the period, then you must comply according to the schedule specified in paragraph (d)(2)(i) or (ii) of this section, as appropriate.

(i) You must comply before the end of the standard calendar period within which the compliance deadline occurs, if there remain at least 3 days for tasks that must be performed weekly, at least 2 weeks for tasks that must be performed monthly, at least 1 month for tasks that must be performed quarterly, or at least 3 months for tasks that must be performed annually; or

(ii) In all instances where a provision of this subpart requires completing a task during each of multiple successive periods, you may perform the required task at any time during the specified period, provided that the task is conducted at a reasonable interval after completion of the task during the previous period.

NOTIFICATIONS, REPORTS, AND RECORDS

§63.5575 What notifications must I submit and when?

You must submit each notification in Table 7 to this subpart that applies to you by the date specified in Table 7 to this subpart. Initial notifications and Notification of Compliance Status Reports shall be electronically submitted

sfrattini on LAPJZKW1R2 with $$_JOB
VerDate Sep<11>2014 09:16 Apr 04, 2023 Jkt 256165 PO 00000 Frm 01143 Fmt 8010 Sfmt 8010 Q:\40\256165.XXX PC31

in portable document format (PDF) following the procedure specified in § 63.5580(g).

[85 FR 39995, July 2, 2020]

§ 63.5580 What reports must I submit and when?

(a) You must submit each report in Table 8 to this subpart that applies to you.

(b) Unless the Administrator has approved a different schedule for submitting reports under § 63.10, you must submit each compliance report by the date in Table 8 to this subpart and according to the requirements in paragraphs (b)(1) through (6) of this section.

(1) The first compliance report must cover the period beginning on the compliance date that is specified for your affected source in § 63.5495 and ending on June 30 or December 31, whichever date is the first date following the end of the first calendar half after the compliance date that is specified for your source in § 63.5495.

(2) The first compliance report must be submitted no later than August 31 or February 28, whichever date follows the end of the first calendar half after the compliance date that is specified for your affected source in § 63.5495.

(3) Each subsequent compliance report must cover the semiannual reporting period from January 1 through June 30 or the semiannual reporting period from July 1 through December 31.

(4) Each subsequent compliance report must be submitted no later than August 31 or February 28, whichever date is the first date following the end of the semiannual reporting period.

(5) For each affected source that is subject to permitting regulations pursuant to 40 CFR part 70 or 40 CFR part 71, and if the permitting authority has established dates for submitting semiannual reports pursuant to 40 CFR 70.6(a)(3)(iii)(A) or 40 CFR 71.6(a)(3)(iii)(A), you may submit the first and subsequent compliance reports according to the dates the permitting authority has established instead of according to the dates in paragraphs (b)(1) through (4) of this section.

(6) Prior to December 29, 2020, all compliance reports submitted by mail must be postmarked or delivered no later than the dates specified in paragraphs (b)(1) through (5). Beginning on December 29, 2020, you must submit all compliance reports following the procedure specified in paragraph (g) of this section by the dates specified in paragraphs (b)(1) through (5).

(c) The compliance report must contain the information in paragraphs (c)(1) through (6) of this section.

(1) Company name and address.

(2) Statement by a responsible official, with that official's name, title, and signature, certifying that, based on information and belief formed after reasonable inquiry, the statements and information in the report are true, accurate, and complete.

(3) Date of report and beginning and ending dates of the reporting period.

(4) Before December 30, 2020, for each existing source (and for each new or reconstructed source for which construction or reconstruction commenced on or before September 9, 2019), if you had a startup, shutdown, or malfunction during the reporting period and you took actions consistent with your SSM plan, the compliance report must include the information in § 63.10(d)(5)(i). After December 29, 2020, you are no longer required to report the information in § 63.10(d)(5)(i). No SSM plan is required for any new or reconstruction source for which construction or reconstruction commenced after September 9, 2019.

(5) If there are no deviations from any emission limits, operating limits, or work practice standards that apply to you (see Tables 5 and 6 to this subpart), the compliance report must contain a statement that there were no deviations from the emission limits, operating limits, or work practice standards during the reporting period.

(6) If there were no periods during which the CMS was out-of-control, the compliance report must contain a statement that there were no periods during which the CMS was out-of-control during the reporting period. You must include specifications for out-of-control operation in the quality control plan required under § 63.8(d)(2).

(d) For each deviation from an emission limit or work practice standard that occurs at an affected source where

sfrattini on LAPJZKW1R2 with $$_JOB
VerDate Sep<11>2014 09:16 Apr 04, 2023 Jkt 256165 PO 00000 Frm 01144 Fmt 8010 Sfmt 8010 Q:\40\256165.XXX PC31

you are not using a CMS to demonstrate continuous compliance with the emission limits or work practice standards in this subpart (see Table 5 to this subpart), the compliance report must contain the information in paragraphs (c)(1) through (4) and (d)(1) and (2) of this section. This includes periods of startup, shutdown, and malfunction.

(1) The total operating time of each affected source during the reporting period.

(2) Information on the number, duration, and cause of deviations (including unknown cause, if applicable), as applicable, and the corrective action taken.

(e) For each deviation from an emission limit or operating limit occurring at an affected source where you are using a CMS to demonstrate continuous compliance with the emission limit or operating limit in this subpart (see Tables 5 and 6 to this subpart), you must include the information in paragraphs (c)(1) through (4) and (e)(1) through (14) of this section. This includes periods of SSM.

(1) The date and time that each malfunction started and stopped.

(2) The date, time, and duration that each CMS was inoperative, except for zero (low-level) and high-level checks.

(3) The date, time, and duration that each CMS was out-of-control.

(4) The date and time that each deviation started and stopped, and whether each deviation occurred during a period of startup, shutdown, or malfunction or during another period.

(5) A summary of the total duration of the deviation during the reporting period and the total duration as a percent of the total source operating time during that reporting period.

(6) A breakdown of the total duration of the deviations during the reporting period into those that are due to startup, shutdown, control equipment problems, process problems, other known causes, and other unknown causes.

(7) A summary of the total duration of CMS downtime during the reporting period and the total duration of CMS downtime as a percent of the total source operating time during that reporting period.

(8) An identification of each HAP that is known to be in the emission stream at the affected source.

(9) A brief description of the process units.

(10) A brief description of the CMS.

(11) The date of the latest CEMS certification or audit or CPMS inspection, calibration, or validation check.

(12) A description of any changes in CMS, processes, or controls since the last reporting period.

(13) The operating day average values of monitored parameters.

(14) An estimate of the quantity of each regulated pollutant emitted over any emission limit, and a description of the method used to estimate the emissions.

(f) If you have obtained a title V operating permit according to 40 CFR part 70 or 40 CFR part 71, you must report all deviations as defined in this subpart in the semiannual monitoring report required by 40 CFR 70.6(a)(3)(iii)(A) or 40 CFR 71.6(a)(3)(iii)(A). If you submit a compliance report according to Table 8 to this subpart along with, or as part of, the semiannual monitoring report required by 40 CFR 70.6(a)(3)(iii)(A) or 40 CFR 71.6(a)(3)(iii)(A), and the compliance report includes all required information concerning deviations from any emission limit, operating limit, or work practice standard in this subpart, then submitting the compliance report will satisfy any obligation to report the same deviations in the semiannual monitoring report. However, submitting a compliance report will not otherwise affect any obligation you may have to report deviations from permit requirements to the permit authority.

(g) If you are required to submit notifications or reports following the procedure specified in this paragraph, you must submit notifications or reports to the EPA via the Compliance and Emissions Data Reporting Interface (CEDRI), which can be accessed through the EPA's Central Data Exchange (CDX) (*https://cdx.epa.gov/*). Notifications must be submitted as PDFs to CEDRI. You must use the semi-annual compliance report template on the CEDRI website (*https://www.epa.gov/electronic-reporting-air-emissions/compliance-and-emissions-data-reporting-interface-cedri*) for this subpart. The date report templates become available will be listed on the CEDRI website. The

sfrattini on LAPJZKW1R2 with $$_JOB
VerDate Sep<11>2014 09:16 Apr 04, 2023 Jkt 256165 PO 00000 Frm 01145 Fmt 8010 Sfmt 8010 Q:\40\256165.XXX PC31

semi-annual compliance report must be submitted by the deadline specified in this subpart, regardless of the method in which the report is submitted. If you claim some of the information required to be submitted via CEDRI is confidential business information (CBI), submit a complete report, including information claimed to be CBI, to the EPA. The report must be generated using the appropriate form on the CEDRI website. Submit the file on a compact disc, flash drive, or other commonly used electronic storage medium and clearly mark the medium as CBI. Mail the electronic medium to U.S. EPA/OAQPS/CORE CBI Office, Attention: Group Leader, Measurement Policy Group, MD C404–02, 4930 Old Page Rd., Durham, NC 27703. The same file with the CBI omitted must be submitted to the EPA via the EPA's CDX as described earlier in this paragraph.

(h) Within 60 days after the date of completing each performance test required by this subpart, you must submit the results of the performance test following the procedures specified in paragraphs (h)(1) through (3) of this section.

(1) *Data collected using test methods supported by the EPA's Electronic Reporting Tool (ERT) as listed on the EPA's ERT website (https://www.epa.gov/electronic-reporting-air-emissions/electronic-reporting-tool-ert) at the time of the test.* Submit the results of the performance test to the EPA via CEDRI, which can be accessed through the EPA's CDX (*https://cdx.epa.gov/*). The data must be submitted in a file format generated through the use of the EPA's ERT. Alternatively, you may submit an electronic file consistent with the extensible markup language (XML) schema listed on the EPA's ERT website.

(2) *Data collected using test methods that are not supported by the EPA's ERT as listed on the EPA's ERT website at the time of the test.* The results of the performance test must be included as an attachment in the ERT or an alternate electronic file consistent with the XML schema listed on the EPA's ERT website. Submit the ERT generated package or alternative file to the EPA via CEDRI.

(3) *Confidential business information (CBI).* If you claim some of the information submitted under this paragraph (h) is CBI, you must submit a complete file, including information claimed to be CBI, to the EPA. The file must be generated through the use of the EPA's ERT or an alternate electronic file consistent with the XML schema listed on the EPA's ERT website. Submit the file on a compact disc, flash drive, or other commonly used electronic storage medium and clearly mark the medium as CBI. Mail the electronic medium to U.S. EPA/OAQPS/CORE CBI Office, Attention: Group Leader, Measurement Policy Group, MD C404–02, 4930 Old Page Rd., Durham, NC 27703. The same file with the CBI omitted must be submitted to the EPA via the EPA's CDX as described in paragraph (h) of this section.

(i) Within 60 days after the date of completing each CMS performance evaluation (as defined in § 63.2), you must submit the results of the performance evaluation following the procedures specified in paragraphs (i)(1) through (3) of this section.

(1) *Performance evaluations of CMS measuring relative accuracy test audit (RATA) pollutants that are supported by the EPA's ERT as listed on the EPA's ERT website at the time of the evaluation.* Submit the results of the performance evaluation to the EPA via CEDRI, which can be accessed through the EPA's CDX. The data must be submitted in a file format generated through the use of the EPA's ERT. Alternatively, you may submit an electronic file consistent with the XML schema listed on the EPA's ERT website.

(2) *Performance evaluations of CMS measuring RATA pollutants that are not supported by the EPA's ERT as listed on the EPA's ERT website at the time of the evaluation.* The results of the performance evaluation must be included as an attachment in the ERT or an alternate electronic file consistent with the XML schema listed on the EPA's ERT website. Submit the ERT generated package or alternative file to the EPA via CEDRI.

(3) *Confidential business information (CBI).* If you claim some of the information submitted under this paragraph (i) is CBI, you must submit a complete file, including information claimed to

sfrattini on LAPJZKW1R2 with $$_JOB
VerDate Sep<11>2014 09:16 Apr 04, 2023 Jkt 256165 PO 00000 Frm 01146 Fmt 8010 Sfmt 8010 Q:\40\256165.XXX PC31

be CBI, to the EPA. The file must be generated through the use of the EPA's ERT or an alternate electronic file consistent with the XML schema listed on the EPA's ERT website. Submit the file on a compact disc, flash drive, or other commonly used electronic storage medium and clearly mark the medium as CBI. Mail the electronic medium to U.S. EPA/OAQPS/CORE CBI Office, Attention: Group Leader, Measurement Policy Group, MD C404–02, 4930 Old Page Rd., Durham, NC 27703. The same file with the CBI omitted must be submitted to the EPA via the EPA's CDX as described in this paragraph (i).

(j) If you are required to electronically submit a report or notification through CEDRI in the EPA's CDX, you may assert a claim of EPA system outage for failure to timely comply with the reporting requirement. To assert a claim of EPA system outage, you must meet the requirements outlined in paragraphs (j)(1) through (7) of this section.

(1) You must have been or will be precluded from accessing CEDRI and submitting a required report within the time prescribed due to an outage of either the EPA's CEDRI or CDX systems.

(2) The outage must have occurred within the period of time beginning 5 business days prior to the date that the submission is due.

(3) The outage may be planned or unplanned.

(4) You must submit notification to the Administrator in writing as soon as possible following the date you first knew, or through due diligence should have known, that the event may cause or has caused a delay in reporting.

(5) You must provide to the Administrator a written description identifying:

(i) The date(s) and time(s) when CDX or CEDRI was accessed and the system was unavailable;

(ii) A rationale for attributing the delay in reporting beyond the regulatory deadline to EPA system outage;

(iii) A description of measures taken or to be taken to minimize the delay in reporting; and

(iv) The date by which you propose to report, or if you have already met the reporting requirement at the time of the notification, the date you reported.

(6) The decision to accept the claim of the EPA system outage and allow an extension to the reporting deadline is solely within the discretion of the Administrator.

(7) In any circumstance, the report must be submitted electronically as soon as possible after the outage is resolved.

(k) If you are required to electronically submit a report through CEDRI in the EPA's CDX, you may assert a claim of force majeure for failure to timely comply with the reporting requirement. To assert a claim of force majeure, you must meet the requirements outlined in paragraphs (k)(1) through (5) of this section.

(1) You may submit a claim if a force majeure event is about to occur, occurs, or has occurred or there are lingering effects from such an event within the period of time beginning five business days prior to the date the submission is due. For the purposes of this section, a force majeure event is defined as an event that will be or has been caused by circumstances beyond the control of the affected facility, its contractors, or any entity controlled by the affected facility that prevents you from complying with the requirement to submit a report electronically within the time period prescribed. Examples of such events are acts of nature (*e.g.*, hurricanes, earthquakes, or floods), acts of war or terrorism, or equipment failure or safety hazard beyond the control of the affected facility (*e.g.*, large scale power outage).

(2) You must submit notification to the Administrator in writing as soon as possible following the date you first knew, or through due diligence should have known, that the event may cause or has caused a delay in reporting.

(3) You must provide to the Administrator:

(i) A written description of the force majeure event;

(ii) A rationale for attributing the delay in reporting beyond the regulatory deadline to the force majeure event;

(iii) A description of measures taken or to be taken to minimize the delay in reporting; and

sfrattini on LAPJZKW1R2 with $$_JOB
VerDate Sep<11>2014 09:16 Apr 04, 2023 Jkt 256165 PO 00000 Frm 01147 Fmt 8010 Sfmt 8010 Q:\40\256165.XXX PC31

(iv) The date by which you propose to report, or if you have already met the reporting requirement at the time of the notification, the date you reported.

(4) The decision to accept the claim of force majeure and allow an extension to the reporting deadline is solely within the discretion of the Administrator.

(5) In any circumstance, the reporting must occur as soon as possible after the force majeure event occurs.

[67 FR 40055, June 11, 2002, as amended at 85 FR 39995, July 2, 2020]

§ 63.5585 What records must I keep?

You must keep the records in Table 9 to this subpart that apply to you.

§ 63.5590 In what form and how long must I keep my records?

(a) Your records must be in a form suitable and readily available for expeditious review, according to § 63.10(b)(1).

(b) As specified in § 63.10(b)(1), you must keep each record for 5 years following the date of each occurrence, measurement, maintenance, corrective action, report, or record.

(c) You must keep each record onsite for at least 2 years after the date of each occurrence, measurement, maintenance, corrective action, report, or record, according to § 63.10(b)(1). You can keep the records offsite for the remaining 3 years.

(d) You may keep records in hard copy or computer-readable form including, but not limited to, paper, microfilm, computer, floppy disk, magnetic tape, or microfiche.

(e) Any records required to be maintained by this part that are submitted electronically via EPA's CEDRI may be maintained in electronic format. This ability to maintain electronic copies does not affect the requirement for facilities to make records, data, and reports available upon request to a delegated air agency or the EPA as part of an on-site compliance evaluation.

[67 FR 40055, June 11, 2002, as amended at 85 FR 39997, July 2, 2020]

OTHER REQUIREMENTS AND INFORMATION

§ 63.5595 What compliance options do I have if part of my affected source is subject to both this subpart and another subpart?

(a) For any Group 1 or Group 2 wastewater stream that is subject to the wastewater provisions in this subpart and the wastewater provisions in 40 CFR parts 260 through 272, you must comply with the requirements of either paragraph (a)(1) or (2) of this section.

(1) You must comply with more stringent control, testing, monitoring, recordkeeping, and reporting requirements that overlap between the provisions of this subpart and the provisions of 40 CFR parts 260 through 272. You must keep a record of the information used to determine which requirements were the most stringent and submit this information if requested by the Administrator.

(2) You must submit, no later than 4 months before the applicable compliance date specified in § 63.5495, a request for a case-by-case determination of requirements. The request must include the information specified in paragraphs (a)(2)(i) and (ii) of this section.

(i) Identification of the wastewater streams that are subject to this subpart and to provisions in 40 CFR parts 260 through 272, determination of the Group 1/Group 2 status of those streams, determination of whether or not those streams are listed or exhibit a characteristic as specified in 40 CFR part 261, and determination of whether the waste management unit is subject to permitting under 40 CFR part 270.

(ii) Identification of the specific control, testing, monitoring, recordkeeping, and reporting requirements that overlap between the provisions of this subject and the provisions of 40 CFR parts 260 through 272.

(b) If any combustion device, recovery device, or recapture device, as defined in § 63.111, subject to this subpart is also subject to the monitoring, recordkeeping, and reporting requirements in 40 CFR part 264, subpart AA or CC, or is subject to monitoring and recordkeeping requirements in 40 CFR part 265, subpart AA or CC, and you

sfrattini on LAPJZKW1R2 with $$_JOB
VerDate Sep<11>2014 09:16 Apr 04, 2023 Jkt 256165 PO 00000 Frm 01148 Fmt 8010 Sfmt 8010 Q:\40\256165.XXX PC31

comply with the periodic reporting requirements under 40 CFR part 264, subpart AA or CC, that would apply to the device if the affected source had final-permitted status, you may elect to comply either with the monitoring, recordkeeping, and reporting requirements of this subpart, or with the monitoring, recordkeeping, and reporting requirements in 40 CFR parts 264 and/or 265, as described in this paragraph (b), which will constitute compliance with the monitoring, recordkeeping, and reporting requirements of this subpart. You must identify which option has been selected in the Notification of Compliance Status Report required in §63.5575 and Table 7 to this subpart.

§63.5600 What other requirements apply to me?

(a) Table 10 to this subpart shows which provisions of the General Provisions in §§63.1 through 63.15 apply to you.

(b) For the purposes of this subpart, the applicable subpart A requirements in Table 10 to this subpart supersede the applicable subpart A requirements in subparts F, G, H, U and UU of this part.

§63.5605 Who implements and enforces this subpart?

(a) This subpart can be implemented and enforced by us, the US Environmental Protection Agency (EPA), or a delegated authority, such as your State, local, or tribal agency. If the Administrator has delegated authority to your State, local, or tribal agency, then that agency has the authority to implement and enforce this subpart. You should contact your EPA Regional Office to find out if this subpart is delegated to your State, local, or tribal agency.

(b) In delegating implementation and enforcement authority of this subpart to a State, local, or tribal agency under subpart E of this part, the Administrator keeps the authorities contained in paragraphs (b)(1) through (4) of this section and does not delegate such authorities to a State, local, or tribal agency.

(1) Approval of alternatives to the non-opacity emission limits, operating limits, and work practice standards in §63.5505(a) through (c) and under §63.6(g).

(2) Approval of major alternatives to test methods under §63.7(e)(2)(ii) and (f) and as defined in §63.90.

(3) Approval of major alternatives to monitoring under §63.8(f) and as defined in §63.90.

(4) Approval of major alternatives to recordkeeping and reporting under §63.10(f) and as defined in §63.90.

§63.5610 What definitions apply to this subpart?

(a) For all affected sources complying with the batch process vent testing provisions in §63.490(c) and the operating limit provisions in §63.505(c), the terms used in this subpart and in subpart U of this part are defined in §63.482 and paragraph (g) of this section.

(b) For all affected sources complying with the closed-vent system and bypass line requirements in §63.148, the terms used in this subpart and in subpart G of this part are defined in §63.111 and paragraph (g) of this section.

(c) For all affected sources complying with the heat exchanger system requirements in §63.104, the terms used in this subpart and in subpart F of this part are defined in §63.101 and paragraph (g) of this section.

(d) For cellulose ether affected sources complying with the maintenance wastewater, process wastewater, and liquid stream in open system requirements of subparts F and G of this part, the terms used in this subpart and in subparts F and G of this part are defined in §§63.101 and 63.111 and paragraph (g) of this section.

(e) For cellulose ether affected sources complying with the equipment leak requirements of subpart H of this part, the terms used in this subpart and in subpart H of this part are defined in §63.161 and paragraph (g) of this section.

(f) For cellulose ether affected sources complying with the equipment leak requirements of subpart UU of this part, the terms used in this subpart and in subpart UU of this part are defined in §63.1020 and paragraph (g) of this section.

sfrattini on LAPJZKW1R2 with $$_JOB
VerDate Sep<11>2014 09:16 Apr 04, 2023 Jkt 256165 PO 00000 Frm 01149 Fmt 8010 Sfmt 8010 Q:\40\256165.XXX PC31

(g) All other terms used in this subpart have the meaning given them in § 63.2 and this paragraph (g). If a term is defined in § 63.2, § 63.101, § 63.111, § 63.161, or § 63.1020 and in this paragraph (g), the definition in this paragraph (g) applies for purposes of this subpart.

Bottoms receiver means a tank that collects distillation bottoms before the stream is sent for storage or for further downstream processing.

Carbon disulfide unloading and storage operation means a system at an affected source that includes unloading of carbon disulfide from a railcar using nitrogen or water displacement and storage of carbon disulfide in a storage vessel using nitrogen or water padding.

Cellophane means a thin, transparent cellulose material, which is manufactured using the viscose process and used in food packaging (e.g., candy, cheese, baked goods), adhesive tapes, and membranes for industrial uses, such as batteries.

Cellophane operation means the collection of the cellophane process unit and any other equipment, such as heat exchanger systems, wastewater and waste management units, or cooling towers, that are not associated with an individual cellophane process unit, but are located at a cellophane operation for the purpose of manufacturing cellophane and are under common control.

Cellophane process unit means all equipment associated with the viscose process or solvent coating process which collectively function to manufacture cellophane and any associated storage vessels, liquid streams in open systems (as defined in § 63.149), and equipment (as defined in § 63.161) that are used in the manufacturing of cellophane.

Cellulose ether means a compound, such as carboxymethyl cellulose, hydroxyethyl cellulose, hydroxypropyl cellulose, methyl cellulose, or hydroxypropyl methyl cellulose, which is manufactured using the cellulose ether process and used mainly as a thickener, viscosifier, or binder in a wide variety of consumer and other products.

Cellulose ether operation means the collection of the cellulose ether process unit and any other equipment, such as heat exchanger systems, wastewater and waste management units, or cooling towers, that are not associated with an individual cellulose ether process unit, but are located at a cellulose ether operation for the purpose of manufacturing a particular cellulose ether and are under common control.

Cellulose ether process means the following:

(1) A manufacturing process that includes the following process steps:

(i) Reaction of cellulose (e.g., wood pulp or cotton linters) with sodium hydroxide to produce alkali cellulose;

(ii) Reaction of the alkali cellulose with a chemical compound(s), such as ethylene oxide, propylene oxide, methyl chloride, or chloroacetic acid, to produce a particular cellulose ether;

(iii) Washing and purification of the cellulose ether; and

(iv) Drying of the cellulose ether.

(2) Solids handling steps downstream of the drying process are not considered part of the cellulose ether process.

Cellulose ether process change means a change to the cellulose ether process that occurred no earlier than January 1991 that allows the recovery of organic HAP, reduction in organic HAP usage, or reduction in organic HAP leaving the reactor. Includes extended cookout.

Cellulose ether process unit means all equipment associated with a cellulose ether process which collectively function to manufacture a particular cellulose ether and any associated storage vessels, liquid streams in open systems (as defined in § 63.149), and equipment (as defined in § 63.161 or § 63.1020) that are used in the manufacturing of a particular cellulose ether.

Cellulose Ethers Production source category means the collection of cellulose ether operations that use the cellulose ether process to manufacture a particular cellulose ether.

Cellulose food casing means a cellulose casing, which is manufactured using the viscose process, used in forming meat products (e.g., hot dogs, sausages) and, in most cases, removed from the meat products before sale.

Cellulose food casing operation means the collection of the cellulose food casing process unit and any other equipment, such as heat exchanger systems, wastewater and waste management

sfrattini on LAPJZKW1R2 with $$_JOB
VerDate Sep<11>2014 09:16 Apr 04, 2023 Jkt 256165 PO 00000 Frm 01150 Fmt 8010 Sfmt 8010 Q:\40\256165.XXX PC31

units, or cooling towers, that are not associated with an individual cellulose food casing process unit, but are located at a cellulose food casing operation for the purpose of manufacturing cellulose food casings and are under common control.

Cellulose food casing process unit means all equipment associated with the viscose process which collectively function to manufacture cellulose food casings and any associated storage vessels, liquid streams in open systems (as defined in §63.149), and equipment (as defined in §63.161) that are used in the manufacturing of cellulose food casings.

Cellulosic sponge means a porous cellulose product, which is manufactured using the viscose process and used mainly for consumer use (e.g., for cleaning).

Cellulosic sponge operation means the collection of the cellulosic sponge process unit and any other equipment, such as heat exchanger systems, wastewater and waste management units, or cooling towers, that are not associated with an individual cellulosic sponge process unit, but are located at a cellulosic sponge operation for the purpose of manufacturing cellulosic sponges and are under common control.

Cellulosic sponge process unit means all equipment associated with the viscose process which collectively function to manufacture cellulosic sponges and any associated storage vessels, liquid streams in open systems (as defined in §63.149), and equipment (as defined in §63.161) that are used in the manufacturing of cellulosic sponges.

Closed-loop system means a system wherein the emission stream is not normally vented to the atmosphere but is recycled back to the process.

Control technique means any equipment or process control used for capturing, recovering, treating, or preventing HAP emissions. The equipment includes recovery devices and non-recovery control devices, as defined in this paragraph. The process control includes cellulose ether process changes and viscose process changes, as defined in this paragraph.

Deviation means any instance in which an affected source subject to this subpart, or an owner or operator of such a source:

(1) Fails to meet any requirement or obligation established by this subpart, including, but not limited to, any emission limit, operating limit, or work practice standard;

(2) Fails to meet any term or condition that is adopted to implement an applicable requirement in this subpart and that is included in the operating permit for any affected source required to obtain such a permit; or

(3) Fails to meet any emission limit, operating limit, or work practice standard in this subpart during startup, shutdown, or malfunction, regardless of whether or not such failure is permitted by this subpart.

Emission point means an individual process vent, storage vessel, waste management unit, or equipment leak.

Extended cookout (ECO) means a cellulose ether process change that reduces the amount of unreacted ethylene oxide, propylene oxide, methyl chloride, or chloroacetic acid leaving the reactor. This is accomplished by allowing the product to react for a longer time, thereby leaving less unreacted ethylene oxide, propylene oxide, methyl chloride, or chloroacetic acid and reducing emissions of ethylene oxide, propylene oxide, methyl chloride, or chloroacetic acid that might have occurred otherwise.

Miscellaneous Viscose Processes source category means the collection of cellulose food casing, rayon, cellulosic sponge, and cellophane operations that use the viscose process to manufacture a particular cellulose product. These cellulose products include cellulose food casings, rayon, cellulosic sponges, and cellophane.

Nitrogen storage system means a system of padding the carbon disulfide storage vessels with nitrogen to prevent contact with oxygen.

Nitrogen unloading and storage system means the combination of a nitrogen unloading system for unloading carbon disulfide and a nitrogen storage system for storing carbon disulfide.

Nitrogen unloading system means a system of unloading carbon disulfide from railcars to storage vessels using nitrogen displacement to prevent gaseous carbon disulfide emissions to the

sfrattini on LAPJZKW1R2 with $$_JOB
VerDate Sep<11>2014 09:16 Apr 04, 2023 Jkt 256165 PO 00000 Frm 01151 Fmt 8010 Sfmt 8010 Q:\40\256165.XXX PC31

atmosphere and to preclude contact with oxygen.

Non-recovery control device means an individual unit of equipment capable of and normally used for the purpose of capturing or treating HAP emissions. Examples of equipment that may be non-recovery control devices include, but are not limited to, biofilters, caustic scrubbers, flares, thermal oxidizers, and water scrubbers.

Oil absorber means a packed-bed absorber that absorbs pollutant vapors using a type of oil (e.g., kerosene) as the absorption liquid.

Onsite means that records are stored at a location within a major source which encompasses the affected source. Onsite includes, but is not limited to, storage at the affected source or process unit to which the records pertain or storage in central files elsewhere at the major source.

Process vent means a point of discharge to the atmosphere (or the point of entry into a control device, if any) of a HAP-containing gas stream from the unit operation. Process vents do not include vents with a flow rate less than 0.005 standard cubic meter per minute or with a concentration less than 50 parts per million by volume (ppmv) of HAP or TOC, vents on storage tanks, vents on wastewater emission sources, or pieces of equipment regulated under equipment leak standards.

Rayon means cellulose fibers, which are manufactured using the viscose process and used in the production of either textiles (e.g., apparel, drapery, upholstery) or non-woven products (e.g., feminine hygiene products, wipes, computer disk liners, surgical swabs).

Rayon operation means the collection of the rayon process unit and any other equipment, such as heat exchanger systems, wastewater and waste management units, or cooling towers, that are not associated with an individual rayon process unit, but are located at a rayon operation for the purpose of manufacturing rayon and are under common control.

Rayon process unit means all equipment associated with the viscose process which collectively function to manufacture rayon and any associated storage vessels, liquid streams in open systems (as defined in § 63.149), and equipment (as defined in § 63.161) that are used in the manufacturing of rayon.

Recovery device means an individual unit of equipment capable of and normally used for the purpose of recovering HAP emissions for fuel value (i.e., net positive heating value), use, reuse, or for sale for fuel value, use, or reuse. Examples of equipment that may be recovery devices include, but are not limited to, absorbers, carbon adsorbers, condensers, oil-water separators or organic-water separators, or organic removal devices such as decanters, strippers, or thin-film evaporation units.

Responsible official means responsible official as defined in 40 CFR 70.2.

Safety device means a closure device such as a pressure relief valve, frangible disc, fusible plug, or any other type of device which functions exclusively to prevent physical damage or permanent deformation to a unit or its air emission control equipment by venting gases or vapors directly to the atmosphere during unsafe conditions resulting from an unplanned, accidental, or emergency event. For the purposes of this subpart, a safety device is not used for routine venting of gases or vapors from the vapor headspace underneath a cover such as during filling of the unit or to adjust the pressure in this vapor headspace in responses to normal daily diurnal ambient temperature fluctuations. A safety device is designed to remain in a closed position during normal operation and open only when the internal pressure, or another relevant parameter, exceeds the device threshold setting applicable to the air emission control equipment as determined by the owner or operator based on manufacturer recommendations, applicable regulations, fire protection and prevention codes, standard engineering codes and practices, or other requirements for the safe handling of flammable, combustible, explosive, reactive, or hazardous materials.

Solvent coating process means a manufacturing process in which cellophane film is coated (e.g., with Saran® or nitrocellulose) to impart moisture impermeability to the film and to make it

sfrattini on LAPJZKW1R2 with $$_JOB
VerDate Sep<11>2014 09:16 Apr 04, 2023 Jkt 256165 PO 00000 Frm 01152 Fmt 8010 Sfmt 8010 Q:\40\256165.XXX PC31

printable. Both Saran and nitrocellulose use the same solvents—tetrahydrofuran and toluene.

Storage vessel means a tank or other vessel used to store liquids that contain one or more HAP. Storage vessels do not include the following:

(1) Vessels permanently attached to motor vehicles such as trucks, railcars, barges, or ships;

(2) Pressure vessels designed to operate in excess of 204.9 kilopascals (30 pounds per square inch) and without emissions to the atmosphere;

(3) Vessels with capacities smaller than 38 cubic meters (10,000 gallons);

(4) Vessels and equipment storing and/or handling material that contains no HAP or contains HAP as impurities only;

(5) Bottoms receiver tanks;

(6) Surge control vessels;

(7) Wastewater storage vessels; and

(8) Storage vessels assigned to another process unit regulated under another subpart of part 63.

Surge control vessel means feed drums, recycle drums, and intermediate vessels. Surge control vessels are used within a process unit when in-process storage, mixing, or management of flow rates or volumes is needed to assist in production of a product.

Total HAP means the sum of organic HAP emissions measured using EPA Method 18.

Total sulfide means the sum of emissions for carbon disulfide, hydrogen sulfide, and carbonyl sulfide reported as carbon disulfide. Total sulfide, as defined for the purposes of this subpart, does not include other sulfur compounds, such as sulfur dioxide.

Viscose process means the following:

(1) A manufacturing process that includes the following process steps:

(i) Reaction of cellulose (e.g., wood pulp) with sodium hydroxide to produce alkali cellulose;

(ii) Reaction of alkali cellulose with carbon disulfide to produce sodium cellulose xanthate;

(iii) Combination of sodium cellulose xanthate with additional sodium hydroxide to produce viscose solution;

(iv) Extrusion of the viscose into various shapes (e.g., hollow casings, thin fibers, thin sheets, molds);

(v) Regeneration of the cellulose product;

(vi) Washing of the cellulose product; and

(vii) Possibly acid or salt recovery.

(2) The cellulose products manufactured using the viscose process include cellulose food casings, rayon, cellulosic sponges, and cellophane.

Viscose process change means a change to the viscose process that occurred no earlier than January 1991 that allows either the recovery of carbon disulfide or a reduction in carbon disulfide usage in the process.

Wastewater means water that:

(1) Contains either:

(i) An annual average concentration of organic HAP (listed in Table 9 to subpart G of this part) of at least 5 parts per million by weight (ppmw) and has an annual average flow rate of 0.02 liter per minute or greater; or

(ii) An annual average concentration of organic HAP (listed in Table 9 to subpart G of this part) of at least 10,000 ppmw at any flow rate.

(2) Is discarded from a cellulose food casing, rayon, cellulosic sponge, cellophane, or cellulose ether process unit that is part of an affected source. Wastewater is process wastewater or maintenance wastewater.

Water storage system means a system of padding the carbon disulfide storage vessels with water to prevent contact with oxygen. The water, which is saturated with carbon disulfide, is later sent to wastewater treatment.

Water unloading and storage system means the combination of a water unloading system for unloading carbon disulfide and a water storage system for storing carbon disulfide.

Water unloading system means a system of unloading carbon disulfide from railcars to storage vessels using water displacement to prevent gaseous carbon disulfide emissions to the atmosphere and to preclude contact with oxygen.

Work practice standard means any design, equipment, work practice, or operational standard, or combination thereof, that is promulgated pursuant to section 112(h) of the Clean Air Act.

[67 FR 40055, June 11, 2002, as amended at 70 FR 36524, June 24, 2005; 70 FR 46693, Aug. 10, 2005]

sfrattini on LAPJZKW1R2 with $$_JOB
VerDate Sep<11>2014 09:16 Apr 04, 2023 Jkt 256165 PO 00000 Frm 01153 Fmt 8010 Sfmt 8010 Q:\40\256165.XXX PC31

TABLE 1 TO SUBPART UUUU OF PART 63—EMISSION LIMITS AND WORK PRACTICE STANDARDS

As required in § 63.5505(a), you must meet the appropriate emission limits and work practice standards in the following table:

For . . .	at . . .	you must . . .
1. the sum of all viscose process vents.	a. each existing cellulose food casing operation.	i. reduce total uncontrolled sulfide emissions (reported as carbon disulfide) by at least 25% based on a 6-month rolling average; ii. for each vent stream that you control using a control device, route the vent stream through a closed-vent system to the control device; and iii. comply with the work practice standard for closed-vent systems.
	b. each new cellulose food casing operation.	i. reduce total uncontrolled sulfide emissions (reported as carbon disulfide) by at least 75% based on a 6-month rolling average; ii. for each vent stream that you control using a control device, route the vent stream through a closed-vent system to the control device; and iii. comply with the work practice standard for closed-vent systems.
	c. each existing rayon operation	i. reduce total uncontrolled sulfide emissions (reported as carbon disulfide) by at least 35% within 3 years after the effective date based on a 6-month rolling average; for each vent stream that you control using a control device, route the vent stream through a closed-vent system to the control device; and comply with the work practice standard for closed-vent systems; and ii. reduce total uncontrolled sulfide emissions (reported as carbon disulfide) by at least 40% within 8 years after the effective date based on a 6-month rolling average; for each vent stream that you control using a control device, route the vent stream through a closed-vent system to the control device; and comply with the work practice standard for closed-vent systems.
	d. each new rayon operation	i. reduce total uncontrolled sulfide emissions (reported as carbon disulfide) by at least 75% based on a 6-month rolling average; ii. for each vent stream that you control using a control device, route the vent stream through a closed-vent system to the control device; and iii. comply with the work practice standard for closed-vent systems.
	e. each existing or new cellulosic sponge operation.	i. reduce total uncontrolled sulfide emissions (reported as carbon disulfide) by at least 75% based on a 6-month rolling average; ii. for each vent stream that you control using a control device, route the vent stream through a closed-vent system to the control device; and iii. comply with the work practice standard for closed-vent systems.
	f. each existing or new cellophane operation.	i. reduce total uncontrolled sulfide emissions (reported as carbon disulfide) by at least 75% based on a 6-month rolling average; ii. for each vent stream that you control using a control device (except for retractable hoods over sulfuric acid baths at a cellophane operation), route the vent stream through a closed-vent system to the control device; and iii. comply with the work practice standard for closed-vent systems (except for retractable hoods over sulfuric acid baths at a cellophane operation).

sfrattini on LAPJZKW1R2 with $$_JOB
VerDate Sep<11>2014 09:16 Apr 04, 2023 Jkt 256165 PO 00000 Frm 01154 Fmt 8010 Sfmt 8002 Q:\40\256165.XXX PC31

For . . .	at . . .	you must . . .
2. the sum of all solvent coating process vents.	a. each existing or new cellophane operation.	i. reduce uncontrolled toluene emissions by at least 95% based on a 6-month rolling average; ii. for each vent stream that you control using a control device, route the vent stream through a closed-vent system to the control device; and iii. comply with the work practice standard for closed-vent systems.
3. the sum of all cellulose ether process vents.	a. each existing or new cellulose ether operation.	i. reduce total uncontrolled organic HAP emissions by at least 99%; ii. for each vent stream that you control using a control device, route the vent stream through a closed-vent system to the control device; and iii. comply with the work practice standard for closed-vent systems.
4. closed-loop systems	each existing or new cellulose ether operation.	comply by operating the closed-loop system.
5. each carbon disulfide unloading and storage operation.	a. each existing or new viscose process affected source.	i. reduce uncontrolled carbon disulfide emissions by at least 83% from unloading and storage operations based on a 6-month rolling average if you use an alternative control technique not listed in this table source for carbon disulfide unloading and storage operations; if using a control device to reduce emissions, route emissions through a closed-vent system to the control device; and comply with the work practice standard for closed-vent systems; ii. reduce uncontrolled carbon disulfide emissions by at least 0.14% from viscose process vents based on a 6-month rolling average; for each vent stream that you control using a control device, route the vent stream through a closed-vent system to the control device; and comply with the work practice standard for closed-vent systems; iii. install a nitrogen unloading and storage system (as defined in § 63.5610); or iv. install a nitrogen unloading system (as defined in § 63.5610); reduce uncontrolled carbon disulfide emissions by at least 0.045% from viscose process vents based on a 6-month rolling average; for each vent stream that you control, route the vent stream through a closed-vent to the control device; and comply with the work practice standard for closed-vent systems.
6. each toluene storage vessel	a. each existing or new cellophane operation.	i. reduce uncontrolled toluene emissions by at least 95% based on a 6-month rolling average; ii. if using a control device to reduce emissions, route the emissions through a closed-vent system to the control device; and iii. comply with the work practice standard for closed-vent systems.
7. equipment leaks	a. each existing or new cellulose ether operation.	i. comply with the applicable equipment leak standards of §§ 63.162 through 63.179, except that references to ''process unit'' mean ''cellulose ether process unit'' for the purposes of this subpart; or ii. comply with the applicable equipment leak standards of §§ 63.1021 through 63.1037, except that references to ''process unit'' mean ''cellulose ether process unit'' for the purposes of this subpart.
8. all sources of wastewater emissions.	each existing or new cellulose ether operation.	comply with the applicable wastewater provisions of §§ 63.105 and 63.132 through 63.140.
9. liquid streams in open systems	each existing or new cellulose ether operation.	comply with the applicable provisions or § 63.149, except that references to ''chemical manufacturing process unit'' ether means ''cellulose ether process unit'' for the purposes of this subpart.
10. closed-vent system used to route emissions to a control device.	each existing or new affected source (except for retractable hoods over sulfuric acid baths at a cellophane operation).	conduct annual inspections, repair leaks, and maintain records as specified in § 63.148.

sfrattini on LAPJZKW1R2 with $$_JOB
VerDate Sep<11>2014 09:16 Apr 04, 2023 Jkt 256165 PO 00000 Frm 01155 Fmt 8010 Sfmt 8002 Q:\40\256165.XXX PC31

For . . .	at . . .	you must . . .
11. closed-vent system containing a bypass line that could divert a vent stream away from a control device, except for equipment needed for safety purposes (described in § 63.148(f)(3).	a. each existing or new affected source (except for retractable hoods over sulfuric acid baths at a cellophane operation).	(i) install, calibrate, maintain, and operate a flow indicator as specified in § 63.148(f)(1); or (ii) secure the bypass line valve in the closed position with a car-seal or lock-and-key type configuration and inspect the seal or closure mechanism at least once per month as specified in § 63.148(f)(2)).
12. heat exchanger system that cools process equipment or materials in the process unit.	each existing or new affected source	monitor and repair the heat exchanger system according to § 63.104(a) through (e), except that references to ''chemical manufacturing process unit'' mean ''cellulose food casing, rayon, cellulosic sponge, cellophane, or cellulose ether process unit'' for the purposes of this subpart.

[67 FR 40055, June 11, 2002, as amended at 70 FR 46694, Aug. 10, 2005]

TABLE 2 TO SUBPART UUUU OF PART 63—OPERATING LIMITS

As required in § 63.5505(b), you must meet the appropriate operating limits in the following table:

For the following control technique . . .	you must . . .
1. condenser	maintain the daily average condenser outlet gas or condensed liquid temperature no higher than the value established during the compliance demonstration.
2. thermal oxidizer	a. for periods of normal operation, maintain the daily average thermal oxidizer firebox temperature no lower than the value established during the compliance demonstration; b. after December 29, 2020, for existing sources (and new or reconstructed sources for which construction or reconstruction commenced on or before September 9, 2019), and on July 2, 2020, or immediately upon startup, whichever is later for new or reconstructed sources for which construction or reconstruction commenced after September 9, 2019, maintain documentation for periods of startup demonstrating that the oxidizer was properly operating (*e.g.,* firebox temperature had reached the setpoint temperature) prior to emission unit startup.
3. water scrubber ...	a. for periods of normal operation, maintain the daily average scrubber pressure drop and scrubber liquid flow rate within the range of values established during the compliance demonstration; b. after December 29, 2020, for existing sources (and new or reconstructed sources for which construction or, reconstruction commenced on or before September 9, 2019), and on July 2, 2020, or immediately upon startup, whichever is later for new or reconstructed sources for which construction or reconstruction commenced after September 9, 2019, maintain documentation for periods of startup and shutdown to confirm that the scrubber is operating properly prior to emission unit startup and continues to operate properly until emission unit shutdown is complete. Appropriate startup and shutdown operating parameters may be based on equipment design, manufacturer's recommendations, or other site-specific operating values established for normal operating periods.
4. caustic scrubber	a. for periods of normal operation, maintain the daily average scrubber pressure drop, scrubber liquid flow rate, and scrubber liquid pH, conductivity, or alkalinity within the range of values established during the compliance demonstration;

sfrattini on LAPJZKW1R2 with $$_JOB
VerDate Sep<11>2014 09:16 Apr 04, 2023 Jkt 256165 PO 00000 Frm 01156 Fmt 8010 Sfmt 8002 Q:\40\256165.XXX PC31

For the following control technique . . .	you must . . .
	b. after December 29, 2020, for existing sources (and new or reconstructed sources for which construction or reconstruction commenced on or before September 9, 2019), and on July 2, 2020, or immediately upon startup, whichever is later for new or reconstructed sources for which construction or reconstruction commenced after September 9, 2019, maintain documentation for periods of startup and shutdown to confirm that the scrubber is operating properly prior to emission unit startup and continues to operate properly until emission unit shutdown is complete. Appropriate startup and shutdown operating parameters may be based on equipment design, manufacturer's recommendations, or other site-specific operating values established for normal operating periods.
5. flare	maintain the presence of a pilot flame.
6. biofilter	maintain the daily average biofilter inlet gas temperature, biofilter effluent pH or conductivity, and pressure drop within the operating values established during the compliance demonstration.
7. carbon absorber	maintain the regeneration frequency, total regeneration adsorber stream mass or volumetric flow during carbon bed regeneration, and temperature of the carbon bed after regeneration (and within 15 minutes of completing any cooling cycle(s)) for each regeneration cycle within the values established during the compliance demonstration.
8. oil absorber	maintain the daily average absorption liquid flow, absorption liquid temperature, and steam flow within the values established during the compliance demonstration.
9. any of the control techniques specified in this table.	if using a CEMS, maintain the daily average control efficiency of each control device no lower than the value established during the compliance demonstration.
10. any of the control techniques specified in this table.	a. if you wish to establish alternative operating parameters, submit the application for approval of the alternative operating parameters no later than the notification of the performance test or CEMS performance evaluation or no later than 60 days prior to any other initial compliance demonstration; b. the application must include: Information justifying the request for alternative operating parameters (such as the infeasibility or impracticality of using the operating parameters in this final rule); a description of the proposed alternative control device operating parameters; the monitoring approach; the frequency of measuring and recording the alternative parameters; how the operating limits are to be calculated; and information documenting that the alternative operating parameters would provide equivalent or better assurance of compliance with the standard; c. install, operate, and maintain the alternative parameter monitoring systems in accordance with the application approved by the Administrator; d. establish operating limits during the initial compliance demonstration based on the alternative operating parameters included in the approved application; and e. maintain the daily average alternative operating parameter values within the values established during the compliance demonstration.
11. alternative control technique.	a. submit for approval no later than the notification of the performance test or CEMS performance evaluation or no later than 60 days prior to any other initial compliance demonstration a proposed site-specific plan that includes: A description of the alternative control device; test results verifying the performance of the control device; the appropriate operating parameters that will be monitored; and the frequency of measuring and recording to establish continuous compliance with the operating limits; b. install, operate, and maintain the parameter monitoring system for the alternative control device in accordance with the plan approved by the Administrator; c. establish operating limits during the initial compliance demonstration based on the operating parameters for the alternative control device included in the approved plan; and d. maintain the daily average operating parameter values for the alternative control technique within the values established during the compliance demonstration.

[85 FR 39997, July 2, 2020]

TABLE 3 TO SUBPART UUUU OF PART 63—INITIAL COMPLIANCE WITH EMISSION LIMITS AND WORK PRACTICE STANDARDS

As required in §§ 63.5530(a) and 63.5535(g) and (h), you must demonstrate initial compliance with the appropriate emission limits and work practice standards according to the requirements in the following table:

sfrattini on LAPJZKW1R2 with $$_JOB
VerDate Sep<11>2014 09:16 Apr 04, 2023 Jkt 256165 PO 00000 Frm 01157 Fmt 8010 Sfmt 8026 Q:\40\256165.XXX PC31

For . . .	at . . .	for the following emission limit or work practice standard . . .	you have demonstrated initial compliance if . . .
1. the sum of all viscose process vents.	a. each existing cellulose food casing operation.	i. reduce total uncontrolled sulfide emissions (reported as carbon disulfide) by at least 25 percent based on a 6-month rolling average;. ii. for each vent stream that you control using a control device, route the vent stream through a closed-vent system to the control device; and. iii. comply with the work practice standard for closed-vent systems.	(1) the average uncontrolled total sulfide emissions, determined during the month-long compliance demonstration or using engineering assessments, are reduced by at least 25 percent; (2) you have a record of the range of operating parameter values over the month-long compliance demonstration during which the average uncontrolled total sulfide emissions were reduced by at least 25 percent; (3) you prepare a material balance that includes the pertinent data used to determine the percent reduction of total sulfide emissions; and (4) you comply with the initial compliance requirements for closed-vent systems.
	b. each new cellulose food casing operation.	i. reduce total uncontrolled sulfide emissions (reported as carbon disulfide) by at least 75 percent based on a 6-month rolling average;. ii. for each vent stream that you control using a control device, route the vent stream through a closed-vent system to the control device; and. iii. comply with the work practice standard for closed-vent systems..	(1) the average uncontrolled total sulfide emissions, determined during the month-long compliance demonstration or using engineering assessments, are reduced by at least 75 percent; (2) you have a record of the range of operating parameter values over the month-long compliance demonstration during which the average uncontrolled total sulfide emissions were reduced by at least 75 percent; (3) you prepare a material balance that includes the pertinent data used to determine the percent reduction of total sulfide emissions; and (4) you comply with the initial compliance requirements for closed-vent systems.
	c. each existing rayon operation.	i. reduce total uncontrolled sulfide emissions (reported as carbon disulfide) by at least 35 percent within 3 years after the effective date based on a 6-month rolling average; for each vent stream that you control using a control device, route the vent stream through a closed-vent system to the control device; and comply with the work practice standard for closed-vent systems; and.	(1) the average uncontrolled total sulfide emissions, determined during the month-long compliance demonstration or using engineering assessments, are reduced by at least 35 percent within 3 years after the effective date; (2) you have a record of the average operating parameter values over the month-long compliance demonstration during which the average uncontrolled total sulfide emissions were reduced by at least 35 percent; (3) you prepare a material balance that includes the pertinent data used to determine the percent reduction of total sulfide emissions; and (4) you comply with the initial compliance requirements for closed-vent systems; and

sfrattini on LAPJZKW1R2 with $$_JOB
VerDate Sep<11>2014 09:16 Apr 04, 2023 Jkt 256165 PO 00000 Frm 01158 Fmt 8010 Sfmt 8002 Q:\40\256165.XXX PC31

For . . .	at . . .	for the following emission limit or work practice standard . . .	you have demonstrated initial compliance if . . .
		ii. reduce total uncontrolled sulfide emissions (reported as carbon disulfide) by at least 40 percent within 8 years after the effective date based on a 6-month rolling average; for each vent stream that you control using a control device, route the vent stream through a closed-vent system to the control device; and comply with the work practice standard for closed-vent systems..	(1) the average uncontrolled total sulfide emissions, determined during the month-long compliance demonstration or using engineering assessments, are reduced by at least 40 percent within 8 years after the effective date; (2) you have a record of the average operating parameter values over the month-long compliance demonstration during which the average uncontrolled total sulfide emissions were reduced by at least 40 percent; (3) you prepare a material balance that includes the pertinent data used to determine the percent reduction of the total sulfide emissions; and (4) you comply with the initial compliance requirements for closed-vent systems.
	d. each new rayon operation.	i. reduce total uncontrolled sulfide emissions (reported as carbon disulfide) by at least 75 percent; based on a 6-month rolling average;. ii. for each vent stream that you control using a control device, route the vent stream through a closed-vent system to the control device; and. iii. comply with the work practice standard for closed-vent systems..	(1) the average uncontrolled total sulfide emissions, determined during the month-long compliance demonstration or using engineering assessments, are reduced by at least 75 percent; (2) you have a record of the average operating parameter values over the month-long compliance demonstration during which the average uncontrolled total sulfide emissions were reduced by at least 75 percent; (3) you prepare a material balance that includes the pertinent data used to determine the percent reduction of total sulfide missions; and (4) you comply with the initial compliance requirements for closed-vent systems.
	e. each existing or new cellulosic sponge operation.	i. reduce total uncontrolled sulfide emissions (reported as carbon disulfide) by at least 75 percent based on a 6-month rolling average;. ii. for each vent stream that you control using a control device, route the vent stream through a closed-vent system to the control device; and. iii. comply with the work practice standard for closed-vent systems..	(1) the average uncontrolled total sulfide emissions, determined during the month-long compliance demonstration or using engineering assessments, are reduced by at least 75 percent; (2) you have a record of the average operating parameter values over the month-long compliance demonstration during which the average uncontrolled total sulfide emissions were reduced by at least 75 percent; (3) you prepare a material balance that includes the pertinent data used to determine and the percent reduction of total sulfide emissions; and (4) you comply with the initial compliance requirements for closed-vent systems.

sfrattini on LAPJZKW1R2 with $$_JOB
VerDate Sep<11>2014 09:16 Apr 04, 2023 Jkt 256165 PO 00000 Frm 01159 Fmt 8010 Sfmt 8002 Q:\40\256165.XXX PC31

For . . .	at . . .	for the following emission limit or work practice standard . . .	you have demonstrated initial compliance if . . .
	f. each existing or new cellophane operation.	i. reduce total uncontrolled sulfide emissions (reported as carbon disulfide) by at least 75 percent based on a 6-month rolling average;. ii. for each vent stream that you control using a control device (except for retractable hoods over sulfuric acid baths at a cellophane operation), route the vent stream through a closed-vent system to the control device; and. iii. comply with the work practice standard for closed-vent systems..	(1) the average uncontrolled total sulfide emissions, determined during the month-long compliance demonstration or using engineering assessments, are reduced by at least 75 percent; (2) you have a record of the average operating parameter values over the month-long compliance demonstration during which the average uncontrolled total sulfide emissions were reduced by at least 75 percent; (3) you prepare a material balance that includes the pertinent data used to determine the percent reduction of total sulfide emissions; and (4) you comply with the initial compliance requirements for closed-vent systems.
2. the sum of all solvent coating process vents.	a. each existing or new cellophane operation.	i. reduce uncontrolled toluene emissions by at least 95 percent based on a 6-month rolling average;. ii. for each vent stream that you control using a control device, route the vent stream through a closed-vent system to the control device; and. iii. comply with the work practice standard for closed-vent systems..	(1) the average uncontrolled toluene emissions, determined during the month-long compliance demonstration or using engineering assessments, are reduced by at least 95 percent; (2) you have a record of the average operating parameter values over the month-long compliance demonstration during which the average uncontrolled toluene emissions were reduced by at least 95 percent; (3) you prepare a material balance that includes the pertinent data used to determine the percent reduction of toluene emissions; and (4) you comply with the initial compliance requirements for closed-vent systems.
3. the sum of all cellulose ether process vents.	a. each existing or new cellulose ether operation using a performance test to demonstrate initial compliance; or.	i. reduce total uncontrolled organic HAP emissions by at least 99 percent;. ii. for each vent stream that you control using a control device, route the vent stream through a closed-vent system to the control device; and. iii. comply with the work practice standard for closed-vent systems..	(1) average uncontrolled total organic HAP emissions, measured during the performance test or determined using engineering estimates are reduced by at least 99 percent; (2) you have a record of the average operating parameter values over the performance test during which the average uncontrolled total organic HAP emissions were reduced by at least 99 percent; and (3) you comply with the initial compliance requirements for closed-vent systems.

sfrattini on LAPJZKW1R2 with $$_JOB
VerDate Sep<11>2014 09:16 Apr 04, 2023 Jkt 256165 PO 00000 Frm 01160 Fmt 8010 Sfmt 8002 Q:\40\256165.XXX PC31

For . . .	at . . .	for the following emission limit or work practice standard . . .	you have demonstrated initial compliance if . . .
	b. each existing or new cellulose ether operation using a material balance compliance demonstration to demonstrate initial compliance.	i. reduce total uncontrolled organic HAP emissions by at least 99 percent based on a 6-month rolling average;.	(1) average uncontrolled total organic HAP emissions, determined during the month-long compliance demonstration or using engineering estimates are reduced by at least 99 percent;
		ii. for each vent stream that you control using a control device, route the vent stream through a closed-vent system to the control device; and.	(2) you have a record of the average operation parameter values over the month-long compliance demonstration during which the average uncontrolled total organic HAP emissions were reduced by at least 99 percent;
		iii. comply with the work practice standard for closed-vent systems..	(3) you prepare a material balance that includes the pertinent data used to determine the percent reduction of total organic HAP emissions;
			(4) if you use extended cookout to comply, you measure the HAP charged to the reactor, record the grade of product produced, and then calculate reactor emissions prior to extended cookout by taking a percentage of the total HAP charged.
4. closed-loop systems ..	each existing or new cellulose ether operation.	operate and maintain the closed-loop system for cellulose ether operations..	you have a record certifying that a closed-loop system is in use for cellulose ether operations.
5. each carbon disulfide unloading and storage operation.	a. each existing or new viscose process affected source.	i. reduce uncontrolled carbon disulfide emissions by at least 83 percent from unloading and storage operations based on a 6-month rolling average if you use an alternative control technique not listed in this table for carbon disulfide unloading and storage operations; if using a control device to reduce emissions, route emissions through a closed-vent system to the control device; and comply with the work practice standard for closed-vent systems;.	(1) you have a record documenting the 83-percent reduction in uncontrolled carbon disulfide emissions; and
			(2) if venting to a control device to reduce emissions, you comply with the initial compliance requirements for closed-vent systems;
		ii. reduce uncontrolled carbon disulfide by at least 0.14 percent from viscose process vents based on a 6-month rolling average; for each vent stream that you control using a control device, route the vent stream through a closed-vent system to the control device; and comply with the work practice standard for closed-vent systems;.	(1) you comply with the initial compliance requirements for viscose process vents at existing or new cellulose food casing, rayon, cellulosic sponge, or cellophane operations, as applicable;
			(2) the 0.14-percent reduction must be in addition to the reduction already required for viscose process vents at existing or new cellulose food casing, rayon, cellulosic sponge, or cellophane operations, as applicable; and
			(3) you comply with the initial compliance requirements for closed-vent systems;
		iii. install a nitrogen unloading and storage system; or.	you have a record certifying that a nitrogen unloading and storage system is in use; or

sfrattini on LAPJZKW1R2 with $$_JOB
VerDate Sep<11>2014 09:16 Apr 04, 2023 Jkt 256165 PO 00000 Frm 01161 Fmt 8010 Sfmt 8002 Q:\40\256165.XXX PC31

For . . .	at . . .	for the following emission limit or work practice standard . . .	you have demonstrated initial compliance if . . .
		iv. install a nitrogen unloading system; reduce uncontrolled carbon disulfide by at least 0.045 percent from viscose process vents based on a 6-month rolling average; for each vent stream that you control using a control device, route the vent stream through a closed-vent system to the control device; and comply with the work practice standard for closed-vent systems..	(1) you have a record certifying that a nitrogen unloading system is in use; (2) you comply with the initial compliance requirements for viscose process vents at existing or new cellulose food casing, rayon, cellulosic sponge, or cellophane operations, as applicable; (3) the 0.045-percent reduction must be in addition to the reduction already required for viscose process vents at cellulose food casing, rayon, cellulosic sponge, or cellophane operations, as applicable; and (4) you comply with the initial compliance requirements for closed-vent systems.
6. each toluene storage vessel.	a. each existing or new cellophane operation.	i. reduce uncontrolled toluene emissions by at least 95 percent based on a 6-month rolling average;. ii. if using a control device to reduce emissions, route the emissions through a closed-vent system to the control device; and. iii. comply with the work practice standard for closed-vent systems..	(1) the average uncontrolled toluene emissions, determined during the month-long compliance demonstration or using engineering assessments, are reduced by at least 95 percent; (2) you have a record of the average operating parameter values over the month-long compliance demonstration during which the average uncontrolled toluene emissions were reduced by at least 95 percent; (3) you prepare a material balance that includes the pertinent data used to determine the percent reduction of toluene emissions; and (4) if venting to a control device to reduce emissions, you comply with the initial compliance requirements for closed-vent systems.
7. equipment leaks	a. each existing or new cellulose ether operation.	i. comply with the applicable equipment leak standards of §§ 63.162 through 63.179; or.	you comply with the applicable requirements described in the Notification of Compliance Status Report provisions in § 63.182(a)(2) and (c)(1) through (3), except that references to the term ''process unit'' mean ''cellulose ether process unit'' for the purposes of this subpart; or
		ii. comply with the applicable equipment leak standards of §§ 63.1021 through 63.1027..	you comply with the applicable requirements described in the Initial Compliance Status Report provisions of § 63.1039(a), except that references to the term ''process unit'' mean ''cellulose ether process unit'' for the purposes of this subpart.
8. all sources of wastewater emissions.	each existing or new cellulose ether operation.	comply with the applicable wastewater provisions of § 63.105 and §§ 63.132 through 63.140..	you comply with the applicability and Group 1/Group 2 determination provisions of § 63.144 and the initial compliance provisions of §§ 63.105 and 63.145.
9. liquid streams in open systems.	each existing or new cellulose ether operation.	comply with the applicable provisions of § 63.149, except that references to ''chemical manufacturing process unit'' mean ''cellulose ether process unit'' for the purposes of this subpart..	you install emission suppression equipment and conduct an initial inspection according to the provisions of §§ 63.133 through 63.137.

sfrattini on LAPJZKW1R2 with $$_JOB
VerDate Sep<11>2014 09:16 Apr 04, 2023 Jkt 256165 PO 00000 Frm 01162 Fmt 8010 Sfmt 8002 Q:\40\256165.XXX PC31

For . . .	at . . .	for the following emission limit or work practice standard . . .	you have demonstrated initial compliance if . . .
10. closed-vent system used to route emissions to a control device.	a. each existing or new affected source.	i. conduct annual inspections, repair leaks, and maintain records as specified in § 63.148..	(1) you conduct an initial inspection of the closed-vent system and maintain records according to § 63.148; (2) you prepare a written plan for inspecting unsafe-to-inspect and difficult-to-inspect equipment according to § 63.148(g)(2) and (h)(2); and (3) you repair any leaks and maintain records according to § 63.148.
11. closed-vent system containing a bypass line that could divert a vent stream away from a control device, except for equipment needed for safety purposes (described in § 63.148(f)(3)).	a. each existing or new affected source.	i. install, calibrate, maintain, and operate a flow indicator as specified in § 63.148(f)(1); or.	you have a record documenting that you installed a flow indicator as specified in Table 1 to this subpart; or
		ii. secure the bypass line valve in the closed position with a car-seal or lock-and-key type configuration and inspect the seal or closure mechanism at least once per month as specified in § 63.148(f)(2).	you have record documenting that you have secured the bypass line valve as specified in Table 1 to this subpart.
12. heat exchanger system that cools process equipment or materials in the process unit.	a. each existing or new affected source.	i. monitor and repair the heat exchanger system according to § 63.104(a) through (e), except that references to ''chemical manufacturing process unit'' mean ''cellulose food casing, rayon, cellulosic sponge, cellophane, or cellulose ether process unit'' for the purposes of this subpart..	(1) you determine that the heat exchanger system is exempt from monitoring requirements because it meets one of the conditions in § 63.104(a)(1) through (6), and you document this finding in your Notification of Compliance Status Report; or (2) if your heat exchanger system is not exempt, you identify in your Notification of Compliance Status Report the HAP or other representative substance that you will monitor, or you prepare and maintain a site-specific plan containing the information required by § 63.104(c)(1)(i) through (iv) that documents the procedures you will use to detect leaks by monitoring surrogate indicators of the leak.

[85 FR 39998, July 2, 2020]

Table 4 to Subpart UUUU of Part 63—Requirements for Performance Tests

As required in §§ 63.5530(b) and 63.5535(a), (b), (g)(1), and (h)(1), you must conduct performance tests, other initial compliance demonstrations, and CEMS performance evaluations and establish operating limits according to the requirements in the following table:

For . . .	at . . .	you must . . .	using . . .	according to the following requirements . . .
1. the sum of all process vents.	a. each existing or new affected source.	i. select sampling port's location and the number of traverse points;	EPA Method 1 or 1A in appendix A–1 to part 60 of this chapter;	sampling sites must be located at the inlet and outlet to each control device;

sfrattini on LAPJZKW1R2 with $$_JOB
VerDate Sep<11>2014 09:16 Apr 04, 2023 Jkt 256165 PO 00000 Frm 01163 Fmt 8010 Sfmt 8002 Q:\40\256165.XXX PC31

For . . .	at . . .	you must . . .	using . . .	according to the following requirements . . .
		ii. determine velocity and volumetric flow rate;.	EPA Method 2, 2A, 2C, 2D, 2F, or 2G in appendices A–1 and A–2 to part 60 of this chapter;	you may use EPA Method 2A, 2C, 2D, 2F, or 2G as an alternative to using EPA Method 2, as appropriate;
		iii. conduct gas analysis; and,	(1) EPA Method 3, 3A, or 3B in appendix A–2 to part 60 of this chapter; or,	you may use EPA Method 3A or 3B as an alternative to using EPA Method 3; or,
			(2) ASME PTC 19.10–1981—Part 10 (incorporated by reference—see § 63.14); and,	you may use ASME PTC 19.10–1981—Part 10 as an alternative to using the manual procedures (but not instrumental procedures) in EPA Method 3B.
		iv. measure moisture content of the stack gas.	EPA Method 4 in appendix A–3 to part 60 of this chapter.	
2. the sum of all viscose process vents.	a. each existing or new viscose process source.	i. measure total sulfide emissions.	(1) EPA Method 15 in appendix A–5 to part 60 of this chapter; or	(a) you must conduct testing of emissions at the inlet and outlet of each control device; (b) you must conduct testing of emissions from continuous viscose process vents and combinations of batch and continuous viscose process vents at normal operating conditions, as specified in § 63.5535; (c) you must conduct testing of emissions from batch viscose process vents as specified in § 63.490(c), except that the emission reductions required for process vents under this subpart supersede the emission reductions required for process vents under subpart U of this part; and (d) you must collect CPMS data during the period of the initial compliance demonstration and determine the CPMS operating limit during the period of the initial compliance demonstration.
			(2) carbon disulfide and/or hydrogen sulfide CEMS, as applicable;	(a) you must measure emissions at the inlet and outlet of each control device using CEMS; (b) you must install, operate, and maintain the CEMS according to the applicable performance specification (PS–7, PS–8, PS–9, or PS–15) of appendix B to part 60 of this chapter; and (c) you must collect CEMS emissions data at the inlet and outlet of each control device during the period of the initial compliance demonstration and determine the CEMS operating limit during the period of the initial compliance demonstration.

sfrattini on LAPJZKW1R2 with $$_JOB
VerDate Sep<11>2014 09:16 Apr 04, 2023 Jkt 256165 PO 00000 Frm 01164 Fmt 8010 Sfmt 8002 Q:\40\256165.XXX PC31

For . . .	at . . .	you must . . .	using . . .	according to the following requirements . . .
3. the sum of all solvent coating process vents.	a. each existing or new cellophane operation.	i. measure toluene emissions.	(1) EPA Method 18 in appendix A–6 to part 60 of this chapter, or Method 320 in appendix A to part 63; or	(a) you must conduct testing of emissions at the inlet and outlet of each control device; (b) you may use EPA Method 18 or 320 to determine the control efficiency of any control device for organic compounds; for a combustion device, you must use only HAP that are present in the inlet to the control device to characterize the percent reduction across the combustion device; (c) you must conduct testing of emissions from continuous solvent coating process vents and combinations of batch and continuous solvent coating process vents at normal operating conditions, as specified in § 63.5535; (d) you must conduct testing of emissions from batch solvent coating process vents as specified in § 63.490(c), except that the emission reductions required for process vents under this subpart supersede the emission reductions required for process vents under subpart U of this part; and (e) you must collect CPMS data during the period of the initial compliance demonstration and determine the CPMS operating limit during the initial compliance demonstration.
			(2) ASTM D6420–99 (Reapproved 2010) (incorporated by reference—see § 63.14); or	(a) you must conduct testing of emissions at the inlet and outlet of each control device; (b) you may use ASTM D6420–99 (Reapproved 2010) as an alternative to EPA Method 18 only where: The target compound(s) are known and are listed in ASTM D6420 as measurable; this ASTM should not be used for methane and ethane because their atomic mass is less than 35; ASTM D6420 should never be specified as a total VOC method; (c) you must conduct testing of emissions from continuous solvent coating process vents and combinations of batch and continuous solvent coating process vents at normal operating conditions, as specified in § 63.5535; (d) you must conduct testing of emissions from batch solvent coating process vents as specified in § 63.490(c), except that the emission reductions required for process vents under this subpart supersede the emission reductions required for process vents under subpart U of this part; and (e) you must collect CPMS data during the period of the initial compliance demonstration and determine the CPMS operating limit during the period of the initial compliance demonstration.

sfrattini on LAPJZKW1R2 with $$_JOB
VerDate Sep<11>2014 09:16 Apr 04, 2023 Jkt 256165 PO 00000 Frm 01165 Fmt 8010 Sfmt 8002 Q:\40\256165.XXX PC31

For . . .	at . . .	you must . . .	using . . .	according to the following requirements . . .
			(3) ASTM D6348–12e1 (incorporated by reference—see § 63.14).	(a) you must conduct testing of emissions at the inlet and outlet of each control device; (b) you may use ASTM D6348–12e1 as an alternative to EPA Method 320 only where the following conditions are met: (1) The test plan preparation and implementation in the Annexes to ASTM D 6348–03, Sections A1 through A8 are mandatory; and (2) in ASTM D6348–03 Annex A5 (Analyte Spiking Technique), the percent recovery (%R) must be determined for each target analyte (Equation A5.5). In order for the test data to be acceptable for a compound, %R must be greater than or equal to 70 percent and less than or equal to 130 percent. If the %R value does not meet this criterion for a target compound, the test data are not acceptable for that compound and the test must be repeated for that analyte (*i.e.,* the sampling and/or analytical procedure should be adjusted before a retest). The %R value for each compound must be reported in the test report, and all field measurements must be corrected with the calculated %R value for that compound by using the following equation: Reported Results = ((Measured Concentration in the Stack)/(%R)) × 100. ASTM D6348–03 is incorporated by reference, see § 63.14. (c) you must conduct testing of emissions from continuous solvent coating process vents and combinations of batch and continuous solvent coating process vents at normal operating conditions, as specified in § 63.5535; (d) you must conduct testing of emissions from batch solvent coating process vents as specified in § 63.490(c), except that the emission reductions required for process vents under this subpart supersede the emission reductions required for process vents under subpart U of this part; and (e) you must collect CPMS data during the period of the initial compliance demonstration and determine the CPMS operating limit during the period of the initial compliance demonstration.

sfrattini on LAPJZKW1R2 with $$_JOB
VerDate Sep<11>2014 09:16 Apr 04, 2023 Jkt 256165 PO 00000 Frm 01166 Fmt 8010 Sfmt 8002 Q:\40\256165.XXX PC31

For . . .	at . . .	you must . . .	using . . .	according to the following requirements . . .
4. the sum of all cellulose ether process vents.	a. each existing or new cellulose ether operation.	i. measure total organic HAP emissions.	(1) EPA Method 18 in appendix A–6 to part 60 of this chapter or Method 320 in appendix A to this part, or	(a) you must conduct testing of emissions at the inlet and outlet of each control device; (b) you may use EPA Method 18 or 320 to determine the control efficiency of any control device for organic compounds; for a combustion device, you must use only HAP that are present in the inlet to the control device to characterize the percent reduction across the combustion device; (c) you must conduct testing of emissions from continuous cellulose ether process vents and combinations of batch and continuous cellulose ether process vents at normal operating conditions, as specified in § 63.5535; (d) you must conduct testing of emissions from batch cellulose ether process vents as specified in § 63.490(c), except that the emission reductions required for process vents under this subpart supersede the emission reductions required for process vents under subpart U of this part; and (e) you must collect CPMS data during the period of the initial performance test and determine the CPMS operating limit during the period of the initial performance test.
			(2) ASTM D6420–99 (Reapproved 2010); or	(a) you must conduct testing of emissions at the inlet and outlet of each control device; (b) you may use ASTM D6420–99 (Reapproved 2010) as an alternative to EPA Method 18 only where: The target compound(s) are known and are listed in ASTM D6420 as measurable; this ASTM should not be used for methane and ethane because their atomic mass is less than 35; ASTM D6420 should never be specified as a total VOC method; (c) you must conduct testing of emissions from continuous cellulose ether process vents and combinations of batch and continuous cellulose ether process vents at normal operating conditions, as specified in § 63.5535; (d) you must conduct testing of emissions from batch cellulose ether process vents as specified in § 63.490(c), except that the emission reductions required for process vents under this subpart supersede the emission reductions required for process vents under subpart U of this part; and (e) you must collect CPMS data during the period of the initial performance test and determine the CPMS operating limit during the period of the initial performance test.

sfrattini on LAPJZKW1R2 with $$_JOB
VerDate Sep<11>2014 09:16 Apr 04, 2023 Jkt 256165 PO 00000 Frm 01167 Fmt 8010 Sfmt 8002 Q:\40\256165.XXX PC31

For . . .	at . . .	you must . . .	using . . .	according to the following requirements . . .
			(3) ASTM D6348–12e1.	(a) you must conduct testing of emissions at the inlet and outlet of each control device; (b) you may use ASTM D6348–12e1 as an alternative to EPA Method 320 only where the following conditions are met: (1) The test plan preparation and implementation in the Annexes to ASTM D 6348–03, Sections A1 through A8 are mandatory; and (2) in ASTM D6348–03 Annex A5 (Analyte Spiking Technique), the percent recovery (%R) must be determined for each target analyte (Equation A5.5). In order for the test data to be acceptable for a compound, %R must be greater than or equal to 70 percent and less than or equal to 130 percent. If the %R value does not meet this criterion for a target compound, the test data are not acceptable for that compound and the test must be repeated for that analyte (*i.e.,* the sampling and/or analytical procedure should be adjusted before a retest). The %R value for each compound must be reported in the test report, and all field measurements must be corrected with the calculated %R value for that compound by using the following equation: Reported Results = ((Measured Concentration in the Stack)/(%R)) × 100. (c) you must conduct testing of emissions from continuous solvent coating process vents and combinations of batch and continuous solvent coating process vents at normal operating conditions, as specified in § 63.5535; (d) you must conduct testing of emissions from batch solvent coating process vents as specified in § 63.490(c), except that the emission reductions required for process vents under this subpart supersede the emission reductions required for process vents under subpart U of this part; and (e) you must collect CPMS data during the period of the initial compliance demonstration and determine the CPMS operating limit during the period of the initial compliance demonstration.

sfrattini on LAPJZKW1R2 with $$_JOB
VerDate Sep<11>2014 09:16 Apr 04, 2023 Jkt 256165 PO 00000 Frm 01168 Fmt 8010 Sfmt 8002 Q:\40\256165.XXX PC31

For . . .	at . . .	you must . . .	using . . .	according to the following requirements . . .
			(4) EPA Method 25 in appendix A–7 to part 60 of this chapter; or	(a) you must conduct testing of emissions at the inlet and outlet of each control device; (b) you may use EPA Method 25 to determine the control efficiency of combustion devices for organic compounds; you may not use EPA Method 25 to determine the control efficiency of noncombustion control devices; (c) you must conduct testing of emissions from continuous cellulose ether process vents and combinations of batch and continuous cellulose ether process vents at normal operating conditions, as specified in § 63.5535; (d) you must conduct testing of emissions from batch cellulose ether process vents as specified in § 63.490(c), except that the emission reductions required for process vents under this subpart supersede the emission reductions required for process vents under subpart U of this part; and (e) you must collect CPMS data during the period of the initial performance test and determine the CPMS operating limit during the period of the initial performance test
			(5) EPA Method 25A in appendix A–7 to part 60 of this chapter.	(a) you must conduct testing of emissions at the inlet and outlet of each control device; (b) you may use EPA Method 25A if: An exhaust gas volatile organic matter concentration of 50 ppmv or less is required in order to comply with the emission limit; the volatile organic matter concentration at the inlet to the control device and the required level of control are such as to result in exhaust volatile organic matter concentrations of 50 ppmv or less; or because of the high control efficiency of the control device, the anticipated volatile organic matter concentration at the control device exhaust is 50 ppmv or less, regardless of the inlet concentration; (c) you must conduct testing of emissions from continuous cellulose ether process vents and combinations of batch and continuous cellulose ether process vents at normal operating conditions, as specified in § 63.5535; (d) you must conduct testing of emissions from batch cellulose ether process vents as specified in § 63.490(c), except that the emission reductions required for process vents under this subpart supersede the emission reductions required for process vents under subpart U of this part; and, (e) you must collect CPMS data during the period of the initial performance test and determine the CPMS operating limit during the period of the initial performance test.

sfrattini on LAPJZKW1R2 with $$_JOB
VerDate Sep<11>2014 09:16 Apr 04, 2023 Jkt 256165 PO 00000 Frm 01169 Fmt 8010 Sfmt 8002 Q:\40\256165.XXX PC31

For . . .	at . . .	you must . . .	using . . .	according to the following requirements . . .
5. each toluene storage vessel.	a. each existing or new cellophane operation.	i. measure toluene emissions.	(1) EPA Method 18 in appendix A–6 to part 60 of this chapter or Method 320 in appendix A to this part; or	(a) if venting to a control device to reduce emissions, you must conduct testing of emissions at the inlet and outlet of each control device; (b) you may use EPA Method 18 or 320 to determine the control efficiency of any control device for organic compounds; for a combustion device, you must use only HAP that are present in the inlet to the control device to characterize the percent reduction across the combustion device; (c) you must conduct testing of emissions from continuous storage vessel vents and combinations of batch and continuous storage vessel vents at normal operating conditions, as specified in § 63.5535 for continuous process vents; (d) you must conduct testing of emissions from batch storage vessel vents as specified in § 63.490(c) for batch process vents, except that the emission reductions required for process vents under this subpart supersede the emission reductions required for process vents under subpart U of this part; and, (e) you must collect CPMS data during the period of the initial compliance demonstration and determine the CPMS operating limit during the period of the initial compliance demonstration.
			(2) ASTM D6420–99; or	(a) if venting to a control device to reduce emissions, you must conduct testing of emissions at the inlet and outlet of each control device; (b) you may use ASTM D6420–99 (Reapproved 2010) as an alternative to EPA Method 18 only where: The target compound(s) are known and are listed in ASTM D6420 as measurable; this ASTM should not be used for methane and ethane because their atomic mass is less than 35; ASTM D6420 should never be specified as a total VOC method; (c) you must conduct testing of emissions from continuous storage vessel vents and combinations of batch and continuous storage vessel vents at normal operating conditions, as specified in § 63.5535 for continuous process vents; (d) you must conduct testing of emissions from batch storage vessel vents as specified in § 63.490(c) for batch process vents, except that the emission reductions required for process vents under this subpart supersede the emission reductions required for process vents under subpart U of this part; and, (e) you must collect CPMS data during the period of the initial compliance demonstration and determine the CPMS operating limit during the period of the initial compliance demonstration.

sfrattini on LAPJZKW1R2 with $$_JOB
VerDate Sep<11>2014 09:16 Apr 04, 2023 Jkt 256165 PO 00000 Frm 01170 Fmt 8010 Sfmt 8002 Q:\40\256165.XXX PC31

For . . .	at . . .	you must . . .	using . . .	according to the following requirements . . .
			(3) ASTM D6348–12e1.	(a) you must conduct testing of emissions at the inlet and outlet of each control device; (b) you may use ASTM D6348–12e1 as an alternative to EPA Method 320 only where the following conditions are met: (1) The test plan preparation and implementation in the Annexes to ASTM D 6348–03, Sections A1 through A8 are mandatory; and (2) in ASTM D6348–03 Annex A5 (Analyte Spiking Technique), the percent recovery (%R) must be determined for each target analyte (Equation A5.5). In order for the test data to be acceptable for a compound, %R must be greater than or equal to 70 percent and less than or equal to 130 percent. If the %R value does not meet this criterion for a target compound, the test data are not acceptable for that compound and the test must be repeated for that analyte (*i.e.,* the sampling and/or analytical procedure should be adjusted before a retest). The %R value for each compound must be reported in the test report, and all field measurements must be corrected with the calculated %R value for that compound by using the following equation: Reported Results = ((Measured Concentration in the Stack)/(%R)) × 100. (c) you must conduct testing of emissions from continuous solvent coating process vents and combinations of batch and continuous solvent coating process vents at normal operating conditions, as specified in § 63.5535; (d) you must conduct testing of emissions from batch solvent coating process vents as specified in § 63.490(c), except that the emission reductions required for process vents under this subpart supersede the emission reductions required for process vents under subpart U of this part; and (e) you must collect CPMS data during the period of the initial compliance demonstration and determine the CPMS operating limit during the period of the initial compliance demonstration.
6. the sum of all process vents controlled using a flare.	each existing or new affected source.	measure visible emissions.	EPA Method 22 in appendix A–7 to part 60 of this chapter.	you must conduct the flare visible emissions test according to § 63.11(b).
7. equipment leaks ..	a. each existing or new cellulose ether operation.	i. measure leak rate.	(1) applicable equipment leak test methods in § 63.180; or	you must follow all requirements for the applicable equipment leak test methods in § 63.180; or
			(2) applicable equipment leak test methods in § 63.1023.	you must follow all requirements for the applicable equipment leak test methods in § 63.1023.

sfrattini on LAPJZKW1R2 with $$_JOB
VerDate Sep<11>2014 09:16 Apr 04, 2023 Jkt 256165 PO 00000 Frm 01171 Fmt 8010 Sfmt 8002 Q:\40\256165.XXX PC31

For . . .	at . . .	you must . . .	using . . .	according to the following requirements . . .
8. all sources of wastewater emissions.	a. each existing or new cellulose ether operation.	i. measure wastewater HAP emissions.	(1) applicable wastewater test methods and procedures in §§ 63.144 and 63.145; or	(a) You must follow all requirements for the applicable wastewater test methods and procedures in §§ 63.144 and 63.145; or
			(2) applicable wastewater test methods and procedures in §§ 63.144 and 63.145, using ASTM D5790–95 (Reapproved 2012) (incorporated by reference—see § 63.14) as an alternative to EPA Method 624 in appendix A to part 163 of this chapter.	(a) you must follow all requirements for the applicable waste water test methods and procedures in §§ 63.144 and 63.145, except that you may use ASTM D5790–95 (Reapproved 2012) as an alternative to EPA Method 624, under the condition that this ASTM method be used with the sampling procedures of EPA Method 25D or an equivalent method.
9. any emission point.	a. each existing or new affected source using a CEMS to demonstrate compliance.	i. conduct a CEMS performance evaluation.	(1) applicable requirements in § 63.8 and applicable performance specification (PS–7, PS–8, PS–9, or PS–15) in appendix B to part 60 of this chapter.	(a) you must conduct the CEMS performance evaluation during the period of the initial compliance demonstration according to the applicable requirements in § 63.8 and the applicable performance specification (PS–7, PS–8, PS–9, or PS–15) of 40 CFR part 60, appendix B; (b) you must install, operate, and maintain the CEMS according to the applicable performance specification (PS–7, PS–8, PS–9, or PS–15) of 40 CFR part 60, appendix B; and (c) you must collect CEMS emissions data at the inlet and outlet of each control device during the period of the initial compliance demonstration and determine the CEMS operating limit during the period of the initial compliance demonstration.

[85 FR 40003, July 2, 2020]

TABLE 5 TO SUBPART UUUU OF PART 63—CONTINUOUS COMPLIANCE WITH EMISSION LIMITS AND WORK PRACTICE STANDARDS

As required in § 63.5555(a), you must demonstrate continuous compliance with the appropriate emission limits and work practice standards according to the requirements in the following table:

sfrattini on LAPJZKW1R2 with $$_JOB
VerDate Sep<11>2014 09:16 Apr 04, 2023 Jkt 256165 PO 00000 Frm 01172 Fmt 8010 Sfmt 8026 Q:\40\256165.XXX PC31

For . . .	at . . .	for the following emission limit or work practice standard . . .	you must demonstrate continuous compliance by . . .
1. the sum of all viscose process vents.	a. each existing or new viscose process affected source.	i. reduce total uncontrolled sulfide emissions (reported as carbon disulfide) by at least the specified percentage based on a 6-month rolling average; ii. for each vent stream that you control using a control device (except for retractable hoods over sulfuric acid baths at a cellophane operation), route the vent stream through a closed-vent system to the control device; and. iii. comply with the work practice standard for closed-vent systems (except for retractable hoods over sulfuric acid baths at a cellophane operation).	(1) maintaining a material balance that includes the pertinent data used to determine the percent reduction of total sulfide emissions; (2) documenting the percent reduction of total sulfide emissions using the pertinent data from the material balance; and (3) complying with the continuous compliance requirements for closed-vent systems.
2. the sum of all solvent coating process vents.	a. each existing or new cellophane operation.	i. reduce uncontrolled toluene emissions by at least 95 percent based on a 6-month rolling average; ii. for each vent stream that you control using a control device, route the vent stream through a closed-vent system to the control device; and. iii. comply with the work practice standard for closed-vent systems..	(1) maintaining a material balance that includes the pertinent data used to determine the percent reduction of toluene emissions; (2) documenting the percent reduction of toluene emissions using the pertinent data from the material balance; and (3) complying with the continuous compliance requirements for closed-vent systems.
3. the sum of all cellulose ether process vents.	a. each existing or new cellulose ether operation using a performance test to demonstrate initial compliance; or.	i. reduce total uncontrolled organic HAP emissions by at least 99 percent; ii. for each vent stream that you control using a control device, route the vent stream through a closed-vent system to the control device; and,. iii. comply with the work practice standard for closed-vent systems; or.	(1) complying with the continuous compliance requirements for closed-vent systems; or (2) if using extended cookout to comply, monitoring reactor charges and keeping records to show that extended cookout was employed.
	b. each existing or new cellulose ether operation using a material balance compliance demonstration to demonstrate initial compliance.	i. reduce total uncontrolled organic HAP emissions by at least 99 percent based on a 6-month rolling average; ii. for each vent stream that you control using a control device, route the vent stream through a closed-vent system to control device; and. iii. comply with the work practice standard for closed-vent systems..	(1) maintaining a material balance that includes the pertinent data used to determine the percent reduction of total organic HAP emissions; (2) documenting the percent reduction of total organic HAP emissions using the pertinent data from the material balance; (3) if using extended cookout to comply, monitoring reactor charges and keeping records to show that extended cookout was employed; (4) complying with the continuous compliance requirements for closed-vent systems.
4. closed-loop systems ..	each existing or new cellulose ether operation.	operate and maintain a closed-loop system.	keeping a record certifying that a closed-loop system is in use for cellulose ether operations.
5. each carbon disulfide unloading and storage operation.	a. each existing or new viscose process affected source.	i. reduce uncontrolled carbon disulfide emissions by at least 83 percent based on a 6-month rolling average if you use an alternative control technique not listed in this table for carbon disulfide unloading and storage operations; if using a control device to reduce emissions, route emissions through a closed-vent system to the control device; and comply with the work practice standard for closed-vent systems;	(1) keeping a record documenting the 83 percent reduction in carbon disulfide emissions; and (2) if venting to a control device to reduce emissions, complying with the continuous compliance requirements for closed-vent systems;

sfrattini on LAPJZKW1R2 with $$_JOB
VerDate Sep<11>2014 09:16 Apr 04, 2023 Jkt 256165 PO 00000 Frm 01173 Fmt 8010 Sfmt 8002 Q:\40\256165.XXX PC31

For . . .	at . . .	for the following emission limit or work practice standard . . .	you must demonstrate continuous compliance by . . .
		ii. reduce total uncontrolled sulfide emissions by at least 0.14 percent from viscose process vents based on a 6-month rolling average; for each vent stream that you control using a control device, route the vent stream through a closed-vent system to the control device; and comply with the work practice standard for closed-vent systems;	(1) maintaining a material balance that includes the pertinent data used to determine the percent reduction of total sulfide emissions; (2) documenting the percent reduction of total sulfide emissions using the pertinent data from the material balance; and (3) complying with the continuous compliance requirements for closed-vent systems;
		iii. install a nitrogen unloading and storage system; or	Keeping a record certifying that a nitrogen unloading and storage system is in use; or
		iv. install a nitrogen unloading system; reduce total uncontrolled sulfide emissions by at least 0.045 percent from viscose process vents based on a 6-month rolling average; for each vent stream that you control using a control device, route the vent stream through a closed-vent system to the control device; and comply with the work practice standard for closed-vent systems.	(1) keeping a record certifying that a nitrogen unloading system is in use; (2) maintaining a material balance that includes the pertinent data used to determine the percent reduction of total sulfide emissions; (3) documenting the percent reduction of total sulfide emissions using the pertinent data from the material balance; and (4) complying with the continuous compliance requirements for closed-vent systems.
6. each toluene storage vessel.	a. each existing or new cellophane operation.	i. reduce uncontrolled toluene emissions by at least 95 percent based on a 6-month rolling average;	(1) maintaining a material balance that includes the pertinent data used to determine the percent reduction of toluene emissions;
		ii. if using a control device to reduce emissions, route the emissions through a closed-vent system to the control device; and.	(2) documenting the percent reduction of toluene emissions using the pertinent data from the material balance; and
		iii. comply with the work practice standard for closed vent systems..	(3) if venting to a control device to reduce emissions, complying with the continuous compliance requirements for closed-vent systems.
7. equipment leaks	a. each existing or new cellulose ether operation.	i. applicable equipment leak standards of §§ 63.162 through 63.179; or	complying with the applicable equipment leak continuous compliance provisions of §§ 63.162 through 63.179; or complying with the applicable equipment leak continuous compliance provisions of §§ 63.1021 through 63.1037.
		ii. applicable equipment leak standards of §§ 63.1021 through 63.1037..	
8. all sources of wastewater emissions.	each existing or new cellulose either operation.	applicable wastewater provisions of § 63.105 and §§ 63.132 through 63.140.	complying with the applicable wastewater continuous compliance provisions of §§ 63.105, 63.143, and 63.148.
9. liquid streams in open systems.	each existing or new cellulose ether operation.	comply with the applicable provisions of § 63.149, except that references to ''chemical manufacturing process unit'' mean ''cellulose ether process unit'' for the purposes of this subpart.	conducting inspections, repairing failures, documenting delay of repair, and maintaining records of failures and corrective actions according to §§ 63.133 through 63.137.
10. closed-vent system used to route emissions to a control device.	each existing or new affected source.	conduct annual inspections, repair leaks, maintain records as specified in § 63.148.	conducting the inspections, repairing leaks, and maintaining records according to § 63.148.

sfrattini on LAPJZKW1R2 with $$_JOB
VerDate Sep<11>2014 09:16 Apr 04, 2023 Jkt 256165 PO 00000 Frm 01174 Fmt 8010 Sfmt 8002 Q:\40\256165.XXX PC31

For . . .	at . . .	for the following emission limit or work practice standard . . .	you must demonstrate continuous compliance by . . .
11. closed-vent system containing a bypass line that could divert a vent stream away from a control device, except for equipment needed for safety purposes (described in § 63.148(f)(3).	a. each existing or new affected source.	i. install, calibrate, maintain, and operate a flow indicator as specified in § 63.148(f)(1); or	(1) taking readings from the flow indicator at least once every 15 minutes; (2) maintaining hourly records of flow indicator operation and detection of any diversion during the hour, and (3) recording all periods when the vent stream is diverted from the control stream or the flow indicator is not operating; or
		ii. secure the bypass line valve in the closed position with a car-seal or lock-and-key type configuration and inspect the seal or mechanism at least once per month as specified in § 63.148(f)(2)..	(1) maintaining a record of the monthly visual inspection of the seal or closure mechanism for the bypass line; and (2) recording all periods when the seal mechanism is broken, the bypass line valve position has changed, or the key for a lock-and-key type lock has been checked out.
12. heat exchanger system that cools process equipment or materials in the process unit.	a. each existing or new affected source.	i. monitor and repair the heat exchanger system according to § 63.104(a) through (e), except that references to "chemical manufacturing process unit" mean "cellulose food casing, rayon, cellulosic sponge, cellophane, or cellulose ether process unit" for the purposes of this subpart.	(1) monitoring for HAP compounds, other substances, or surrogate indicators at the frequency specified in § 63.104(b) or (c); (2) repairing leaks within the time period specified in § 63.104(d)(1); (3) confirming that the repair is successful as specified in § 63.104(d)(2); (4) following the procedures in § 63.104(e) if you implement delay of repair; and (5) recording the results of inspections and repair according to § 63.104(f)(1).

[85 FR 40012, July 2, 2020]

Table 6 to Subpart UUUU of Part 63—Continuous Compliance With Operating Limits

As required in § 63.5555(a), you must demonstrate continuous compliance with the appropriate operating limits according to the requirements in the following table:

For the following control technique . . .	for the following operating limit . . .	you must demonstrate continuous compliance by . . .
1. condenser	maintain the daily average condenser outlet gas or condensed liquid temperature no higher than the value established during the compliance demonstration.	collecting the condenser outlet gas or condensed liquid temperature data according to § 63.5545; reducing the condenser outlet gas temperature data to daily averages; and maintaining the daily average condenser outlet gas or condensed liquid temperature no higher than the value established during the compliance demonstration.
2. thermal oxidizer	a. for normal operations, maintain the daily average thermal oxidizer firebox temperature no lower than the value established during the compliance demonstration.	collecting the thermal oxidizer firebox temperature data according to § 63.5545; reducing the thermal oxidizer firebox temperature data to daily averages; and maintaining the daily average thermal oxidizer firebox temperature no lower than the value established during the compliance demonstration.
	b. for periods of startup, maintain documentation demonstrating that the oxidizer was properly operating (*e.g.,* firebox temperature had reached the setpoint temperature) prior to emission unit startup..	collecting the appropriate, site-specific data needed to demonstrate that the oxidizer was properly operating prior to emission unit start up; and excluding firebox temperature from the daily averages during emission unit startup.

sfrattini on LAPJZKW1R2 with $$_JOB
VerDate Sep<11>2014 09:16 Apr 04, 2023 Jkt 256165 PO 00000 Frm 01175 Fmt 8010 Sfmt 8002 Q:\40\256165.XXX PC31

For the following control technique . . .	for the following operating limit . . .	you must demonstrate continuous compliance by . . .
3. water scrubber	a. for periods of normal operation, maintain the daily average scrubber pressure drop and scrubber liquid flow rate within the range of values established during the compliance demonstration.	collecting the scrubber pressure drop and scrubber liquid flow rate data according to § 63.5545; reducing the scrubber parameter data to daily averages; and maintaining the daily scrubber parameter values within the range of values established during the compliance demonstration.
	b. for periods of startup and shutdown, maintain documentation to confirm that the scrubber is operating properly prior to emission unit startup and continues to operate properly until emission unit shutdown is complete. Appropriate startup and shutdown operating parameters may be based on equipment design, manufacturer's recommendations, or other site-specific operating values established for normal operating periods..	collecting the appropriate, site-specific data needed to demonstrate that the scrubber was operating properly during emission unit startup and emission unit shutdown; and excluding parameters from the daily average calculations.
4. caustic scrubber	a. for periods of normal operation, maintain the daily average scrubber pressure drop, scrubber liquid flow rate, and scrubber liquid pH, conductivity, or alkalinity within the range of values established during the compliance demonstration.	collecting the scrubber pressure drop, scrubber liquid flow rate, and scrubber liquid pH, conductivity, or alkalinity data according to § 63.5545; reducing the scrubber parameter data to daily averages; and maintaining the daily scrubber parameter values within the range of values established during the compliance demonstration.
	b. for periods of startup and shutdown, maintain documentation to confirm that the scrubber is operating properly prior to emission unit startup and continues to operate properly until emission unit shutdown is complete. Appropriate startup and shutdown operating parameters may be based on equipment design, manufacturer's recommendations, or other site-specific operating values established for normal operating periods..	collecting the appropriate, site-specific data needed to demonstrate that the scrubber was operating properly during emission unit startup and emission unit shutdown; and excluding parameters from the daily average calculations.
5. flare	maintain the presence of a pilot flame	collecting the pilot flame data according to § 63.5545; and maintaining the presence of the pilot flame.
6. biofilter	maintain the daily average biofilter inlet gas temperature, biofilter effluent pH or conductivity, and pressure drop within the values established during the compliance demonstration.	collecting the biofilter inlet gas temperature, biofilter effluent pH or conductivity, and biofilter pressure drop data according to § 63.5545; reducing the biofilter parameter data to daily averages; and maintaining the daily biofilter parameter values within the values established during the compliance demonstration.
7. carbon absorber	maintain the regeneration frequency, total regeneration stream mass or volumetric flow during carbon bed regeneration and temperature of the carbon bed after regeneration (and within 15 minutes of completing any cooling cycle(s)) for each regeneration cycle within the values established during the compliance demonstration.	collecting the data on regeneration frequency, total regeneration stream mass or volumetric flow during carbon bed regeneration and temperature of the carbon bed after regeneration (and within 15 minutes of completing any cooling cycle(s)) for each regeneration cycle according to § 63.5545; and maintaining carbon absorber parameter values for each regeneration cycle within the values established during the compliance demonstration.
8. oil absorber	maintain the daily average absorption liquid flow, absorption liquid temperature, and steam flow within the values established during the compliance demonstration.	collecting the absorption liquid flow, absorption liquid temperature, and steam flow data according to § 63.5545; reducing the oil absorber parameter data to daily averages; and maintaining the daily oil absorber parameter values within the values established during the compliance demonstration.

sfrattini on LAPJZKW1R2 with $$_JOB
VerDate Sep<11>2014 09:16 Apr 04, 2023 Jkt 256165 PO 00000 Frm 01176 Fmt 8010 Sfmt 8002 Q:\40\256165.XXX PC31

For the following control technique . . .	for the following operating limit . . .	you must demonstrate continuous compliance by . . .
9. any of the control techniques specified in this table.	if using a CEMS, maintain the daily average control efficiency for each control device no lower than the value established during the compliance demonstration.	collecting CEMS emissions data at the inlet and outlet of each control device according to § 63.5545; determining the control efficiency values for each control device using the inlet and outlet CEMS emissions data; reducing the control efficiency values for each control device to daily averages; and maintaining the daily average control efficiency for each control device no lower than the value established during the compliance demonstration.

[85 FR 40014, July 2, 2020]

TABLE 7 TO SUBPART UUUU OF PART 63—NOTIFICATIONS

As required in §§ 63.5490(c)(4), 63.5530(c), 63.5575, and 63.5595(b), you must submit the appropriate notifications specified in the following table:

If you . . .	then you must . . .
1. are required to conduct a performance test	submit a notification of intent to conduct a performance test at least 60 calendar days before the performance test is scheduled to begin, as specified in §§ 63.7(b)(1) and 63.9(e).
2. are required to conduct a CMS performance evaluation.	submit a notification of intent to conduct a CMS performance evaluation at least 60 calendar days before the CMS performance evaluation is scheduled to begin, as specified in §§ 63.8(e)(2) and 63.9(g).
3. wish to use an alternative monitoring method	submit a request to use alternative monitoring method no later than the notification of the initial performance test or CMS performance evaluation or 60 days prior to any other initial compliance demonstration, as specified in § 63.8(f)(4).
4. start up your affected source before June 11, 2002.	submit an initial notification no later than 120 days after June 11, 2002, or no later than 120 after the source becomes subject to this subpart, whichever is later, as specified in § 63.9(b)(2).
5. start up your new or reconstructed source on or after June 11, 2002.	submit an initial notification no later than 120 days after you become subject to this subpart, as specified in § 63.9(b)(3).
6. cannot comply with the relevant standard by the applicable compliance date.	submit a request for extension of compliance no later than 120 days before the compliance date, as specified in §§ 63.9(c) and 63.6(i)(4).
7. are subject to special requirements as specified in § 63.6(b)(3) and (4).	notify the Administrator of your compliance obligations no later than the initial notification dates established in § 63.9(b) for new sources not subject to the special provisions, as specified in § 63.9(d).
8. are required to conduct visible emission observations to determine the compliance of flares as specified in § 63.11(b)(4).	notify the Administrator of the anticipated date for conducting the observations specified in § 63.6(h)(5), as specified in §§ 63.6(h)(4) and 63.9(f).
9. are required to conduct a performance test or other initial compliance demonstration as specified in Table 3 to this subpart.	a. submit a Notification of Compliance Status Report, as specified in § 63.9(h); b. submit the Notification of Compliance Status Report, including the performance test, CEMS performance evaluation, and any other initial compliance demonstration results within 240 calendar days following the compliance date specified in § 63.5495; and c. for sources which construction or reconstruction commenced on or before September 9, 2019, beginning on December 29, 2020, submit all subsequent Notifications of Compliance Status following the procedure specified in § 63.5580(g), (j), and (k). For sources which construction or reconstruction commenced after September 9, 2019, on July 2, 2020, or immediately upon startup, whichever is later, submit all subsequent Notifications of Compliance Status following the procedure specified in § 63.5580(g), (j), and (k).
10. comply with the equipment leak requirements of subpart H of this part for existing or new cellulose ether affected sources.	comply with the notification requirements specified in § 63.182(a)(1) and (2), (b), and (c)(1) through (3) for equipment leaks, with the Notification of Compliance Status Reports required in subpart H included in the Notification of Compliance Status Report required in this subpart.
11. comply with the equipment leak requirements of subpart UU of this part for existing or new cellulose ether affected sources.	comply with the notification requirements specified in § 63.1039(a) for equipment leaks, with the Notification Compliance Status Reports required in subpart UU of this part included in the Notification of Compliance Status Report required in this subpart.
12. comply with the wastewater requirements of subparts F and G of this part for existing or new cellulose ether affected sources.	comply with the notification requirements specified in §§ 63.146(a) and (b), 63.151, and 63.152(a)(1) through (3) and (b)(1) through (5) for wastewater, with the Notification of Compliance Status Reports required in subpart G of this part included in the Notification of Compliance Status Report required in this subpart.

sfrattini on LAPJZKW1R2 with $$_JOB
VerDate Sep<11>2014 09:16 Apr 04, 2023 Jkt 256165 PO 00000 Frm 01177 Fmt 8010 Sfmt 8026 Q:\40\256165.XXX PC31

[85 FR 40015, July 2, 2020, as amended at 85 FR 73909, Nov. 19, 2020]

TABLE 8 TO SUBPART UUUU OF PART 63—REPORTING REQUIREMENTS

As required in §63.5580, you must submit the appropriate reports specified in the following table:

You must submit a compliance report, which must contain the following information . . .	and you must submit the report . . .
1. if there are no deviations from any emission limit, operating limit, or work practice standard during the reporting period, then the report must contain the information specified in §63.5580(c);.	semiannually as specified in §63.5580(b); beginning on December 29, 2020, submit all subsequent reports following the procedure specified in §63.5580(g).
2. if there were no periods during which the CMS was out-of-control, then the report must contain the information specified in §63.5580(c)(6);.	
3. if there is a deviation from any emission limit, operating limit, or work practice standard during the reporting period, then the report must contain the information specified in §63.5580(c) and (d);.	
4. if there were periods during which the CMS was out-of-control, then the report must contain the information specified in §63.5580(e);.	
5. for sources which commenced construction or reconstruction on or before September 9, 2019, if prior to December 29, 2020, you had a startup, shutdown, or malfunction during the reporting period and you took actions consistent with your SSM plan, then the report must contain the information specified in §63.10(d)(5)(i);.	
6. for sources which commenced construction or reconstruction on or before September 9, 2019, if prior to December 29, 2020, you had a startup, shutdown, or malfunction during the reporting period and you took actions that are not consistent with your SSM plan, then the report must contain the information specified in §63.10(d)(5)(ii);.	
7. the report must contain any changes in information already provided, as specified in §63.9(j), except changes in major source status must be reported per §63.9(j);.	
8. for cellulose ether affected sources complying with the equipment leak requirements of subpart H of this part, the report must contain the information specified in §63.182(a)(3) and (6) and (d)(2) through (4);.	
9. for cellulose ether affected sources complying with the equipment leak requirements of subpart UU of this part, the report must contain the information specified in §63.1039(b);.	
10. for cellulose ether affected sources complying with the wastewater requirements of subparts F and G of this part, the report must contain the information specified in §§63.146(c) through (e) and 63.152(a)(4) and (5) and (c) through (e);.	
11. for affected sources complying with the closed-vent system provisions in §63.148, the report must contain the information specified in §63.148(j)(1);.	
12. for affected sources complying with the bypass line provisions in §63.148(f), the report must contain the information specified in §63.148(j)(2) and (3);.	
13. for affected sources invoking the delay of repair provisions in §63.104(e) for heat exchanger systems, the next compliance report must contain the information in §63.104(f)(2)(i) through (iv); if the leak remains unrepaired, the information must also be submitted in each subsequent compliance report until the repair of the leak is reported; and.	
14. for storage vessels subject to the emission limits and work practice standards in Table 1 to Subpart UUUU, the report must contain the periods of planned routine maintenance during which the control device does not comply with the emission limits or work practice standards in Table 1 to this subpart..	

[85 FR 40016, July 2, 2020, as amended at 85 FR 73909, Nov. 19, 2020]

TABLE 9 TO SUBPART UUUU OF PART 63—RECORDKEEPING REQUIREMENTS

As required in §63.5585, you must keep the appropriate records specified in the following table:

If you operate . . .	then you must keep . . .	and the record(s) must contain . . .
1. an existing or new affected source.	a copy of each notification and report that you submitted to comply with this subpart.	all documentation supporting any Initial Notification or Notification of Compliance Status Report that you submitted, according to the requirements in §63.10(b)(2)(xiv), and any compliance report required under this subpart.

sfrattini on LAPJZKW1R2 with $$_JOB
VerDate Sep<11>2014 09:16 Apr 04, 2023 Jkt 256165 PO 00000 Frm 01178 Fmt 8010 Sfmt 8002 Q:\40\256165.XXX PC31

If you operate . . .	then you must keep . . .	and the record(s) must contain . . .
2. an existing or new affected source that commenced construction or reconstruction on or before September 9, 2019.	a. the records in § 63.6(e)(3)(iii) through (iv) related to startup, shutdown, and malfunction prior to December 30, 2020.	i. SSM plan; ii. when actions taken during a startup, shutdown, or malfunction are consistent with the procedures specified in the SSM plan, records demonstrating that the procedures specified in the plan were followed; iii. records of the occurrence and duration of each startup, shutdown, or malfunction; and iv. when actions taken during a startup, shutdown, or malfunction are not consistent with the procedures specified in the SSM plan, records of the actions taken for that event.
	b. records related to startup and shutdown, failures to meet the standard, and actions taken to minimize emissions after December 29, 2020.	i. record the date, time, and duration of each startup and/or shutdown period, including the periods when the affected source was subject to the alternative operating parameters applicable to startup and shutdown; ii. in the event that an affected unit fails to meet an applicable standard, record the number of failures. For each failure, record the date, time and duration of each failure; iii. for each failure to meet an applicable standard, record and retain a list of the affected sources or equipment, an estimate of the quantity of each regulated pollutant emitted over any emission limit and a description of the method used to estimate the emissions; and iv. record actions taken to minimize emissions in accordance with § 63.5515(b), and any corrective actions taken to return the affected unit to its normal or usual manner of operation.
3. a new or reconstructed affected source that commenced construction or reconstruction after September 9, 2019.	a. records related to startup and shutdown, failures to meet the standard, and actions taken to minimize emissions.	i. record the date, time, and duration of each startup and/or shutdown period, including the periods when the affected source was subject to alternative operating parameters applicable to startup and shutdown; ii. in the event that an affected unit fails to meet an applicable standard, record the number of failures. For each failure, record the date, time and duration of each failure; iii. for each failure to meet an applicable standard, record and retain a list of the affected sources or equipment, an estimate of the quantity of each regulated pollutant emitted over any emission limit and a description of the method used to estimate the emissions; and iv. record actions taken to minimize emissions in accordance with § 63.5515(b), and any corrective actions taken to return the affected unit to its normal or usual manner of operation.
4. an existing or new affected source.	a. a site-specific monitoring plan.	i. information regarding the installation of the CMS sampling source probe or other interface at a measurement location relative to each affected process unit such that the measurement is representative of control of the exhaust emissions (*e.g.,* on or downstream of the last control device); ii. performance and equipment specifications for the sample interface, the pollutant concentration or parametric signal analyzer, and the data collection and reduction system; iii. performance evaluation procedures and acceptance criteria (*e.g.,* calibrations); iv. ongoing operation and maintenance procedures in accordance with the general requirements of §§ 63.8(c)(3) and (4)(ii), 63.5515(b), and 63.5580(c)(6); v. ongoing data quality assurance procedures in accordance with the general requirements of § 63.8(d)(2); and vi. ongoing recordkeeping and reporting procedures in accordance with the general requirements of §§ 63.10(c)(1)–(6), (c)(9)–(14), (e)(1), and (e)(2)(i) and 63.5585.
5. an existing or new affected source.	records of performance tests and CEMS performance evaluations, as required in § 63.10(b)(2)(viii) and any other initial compliance demonstrations.	all results of performance tests, CEMS performance evaluations, and any other initial compliance demonstrations, including analysis of samples, determination of emissions, and raw data.

sfrattini on LAPJZKW1R2 with $$_JOB
VerDate Sep<11>2014 09:16 Apr 04, 2023 Jkt 256165 PO 00000 Frm 01179 Fmt 8010 Sfmt 8002 Q:\40\256165.XXX PC31

If you operate . . .	then you must keep . . .	and the record(s) must contain . . .
6. an existing or new affected source.	a. records for each CEMS	i. records described in § 63.10(b)(2)(vi) through (xi); ii. previous (superseded) versions of the performance evaluation plan, with the program of corrective action included in the plan required under § 63.8(d)(2); iii. request for alternatives to relative accuracy test for CEMS as required in § 63.8(f)(6)(i); iv. records of the date and time that each deviation started and stopped, and whether the deviation occurred during a period of startup, shutdown, or malfunction or during another period; and v. records required in Table 6 to Subpart UUUU to show continuous compliance with the operating limit.
7. an existing or new affected source.	a. records for each CPMS	i. records required in Table 6 to Subpart UUUU to show continuous compliance with each operating limit that applies to you; and ii. results of each CPMS calibration, validation check, and inspection required by § 63.5545(b)(4).
8. an existing or new cellulose ether affected ether source.	records of closed-loop systems.	records certifying that a closed-loop system is in use for cellulose ether operations.
9. an existing or new viscose process affected source.	records of nitrogen unloading and storage systems or nitrogen unloading systems.	records certifying that a nitrogen unloading and storage systems or nitrogen unloading system is in use.
10. an existing or new viscose process affected source.	records of material balances	all pertinent data from the material balances used to estimate the 6-month rolling average percent reduction in HAP emissions.
11. an existing or new viscose process affected source.	records of calculations	documenting the percent reduction in HAP emissions using pertinent data from the material balances.
12. an existing or new cellulose ether affected source.	a. extended cookout records	i. the amount of HAP charged to the reactor; ii. the grade of product produced; iii. the calculated amount of HAP remaining before extended cookout; and iv. information showing that extended cookout was employed.
13. an existing or new cellulose ether affected source.	a. equipment leak records	i. the records specified in § 63.181 for equipment leaks; or ii. the records specified in 63.1038 for equipment leaks.
14. an existing or new cellulose ether affected source.	wastewater records	the records specified in §§ 63.105, 63.147, and 63.152(f) and (g) for wastewater.
15. an existing or new affected source.	closed-vent system records ..	the records specified in § 63.148(i).
16. an existing or new affected source.	a. bypass line records	i. hourly records of flow indicator operation and detection of any diversion during the hour and records of all periods when the vent stream is diverted from the control stream or the flow indicator is not operating; or ii. the records of the monthly visual inspection of the seal or closure mechanism and of all periods when the seal mechanism is broken, the bypass line valve position has changed, or the key for a lock-and-key type lock has been checked out and records of any car-seal that has broken.
17. an existing or new affected source.	heat exchanger system records.	records of the results of inspections and repair according to source § 63.104(f)(1).
18. an existing or new affected source.	control device maintenance records.	records of planned routine maintenance for control devices used to comply with the percent reduction emission limit for storage vessels in Table 1 to Subpart UUUU.
19. an existing or new affected source.	safety device records	a record of each time a safety device is opened to avoid unsafe conditions according to § 63.5505(d).

[85 FR 40017, July 2, 2020]

Table 10 to Subpart UUUU of Part 63—Applicability of General Provisions to Subpart UUUU

As required in §§ 63.5515(h) and 63.5600, you must comply with the appropriate General Provisions requirements specified in the following table:

Citation	Subject	Brief description	Applies to Subpart UUUU
§ 63.1	Applicability	Initial applicability determination; applicability after standard established; permit requirements; extensions, notifications.	Yes.
§ 63.2	Definitions	Definitions for part 63 standards	Yes.

sfrattini on LAPJZKW1R2 with $$_JOB
VerDate Sep<11>2014 09:16 Apr 04, 2023 Jkt 256165 PO 00000 Frm 01180 Fmt 8010 Sfmt 8002 Q:\40\256165.XXX PC31

Citation	Subject	Brief description	Applies to Subpart UUUU
§ 63.3	Units and Abbreviations	Units and abbreviations for part 63 standards.	Yes.
§ 63.4	Prohibited Activities and Circumvention.	Prohibited activities; compliance date; circumvention, severability.	Yes.
§ 63.5	Preconstruction Review and Notification Requirements.	Preconstruction review requirements of section 112(i)(1).	Yes.
§ 63.6(a)	Applicability	General provisions apply unless compliance extension; general provisions apply to area sources that become major.	Yes.
§ 63.6(b)(1) through (4).	Compliance Dates for New and Reconstructed sources.	Standards apply at effective date; 3 years after effective date; upon startup; 10 years after construction or reconstruction commences for CAA section 112(f).	Yes.
§ 63.6(b)(5)	Notification	Must notify if commenced construction or reconstruction after proposal.	Yes.
§ 63.6(b)(6)	[Reserved].		
§ 63.6(b)(7)	Compliance Dates for New and Reconstructed Area Sources That Become Major.	Area sources that become major must comply with major source and standards immediately upon becoming major, regardless of whether required to comply when they were an area source.	Yes.
§ 63.6(c)(1) and (2)	Compliance Dates for Existing Sources.	Comply according to date in subpart, which must be no later than 3 years after effective date; for CAA section 112(f) standards, comply within 90 days of effective date unless compliance extension.	Yes.
§ 63.6(c)(3) and (4)	[Reserved].		
§ 63.6(c)(5)	Compliance Dates for Existing Area Sources That Become Major.	Area sources that become major must comply with major source standards by date indicated in subpart or by equivalent time period (*e.g.,* 3 years).	Yes.
§ 63.6(d)	[Reserved]		
§ 63.6(e)(1)(i)	General Duty to Minimize Emissions.	You must operate and maintain affected source in a manner consistent with safety and good air pollution control practices for minimizing emissions.	No, for new or reconstructed sources which commenced construction or reconstruction after September 9, 2019. For all other affected sources, Yes before December 30, 2020, and No thereafter. See 40 CFR 63.5515(b) for general duty requirement.
§ 63.6(e)(1)(ii)	Requirement to Correct Malfunctions ASAP.	You must correct malfunctions as soon as practicable after their occurrence.	No, for new or reconstructed sources which commenced construction or reconstruction after September 9, 2019. For all other affected sources, Yes before December 30, 2020, and No thereafter.
§ 63.6(e)(1)(iii)	Operation and Maintenance Requirements.	Operation and maintenance requirements are enforceable independent of emissions limitations or other requirements in relevant standards.	Yes.
§ 63.6(e)(2)	[Reserved].		
§ 63.6(e)(3)	SSM Plan	Requirement for SSM and SSM plan; content of SSM plan.	No, for new or reconstructed sources which commenced construction or reconstruction after September 9, 2019. For all other affected sources, Yes before December 30, 2020, and No thereafter. See 40 CFR 63.5515(c).

sfrattini on LAPJZKW1R2 with $$_JOB
VerDate Sep<11>2014 09:16 Apr 04, 2023 Jkt 256165 PO 00000 Frm 01181 Fmt 8010 Sfmt 8002 Q:\40\256165.XXX PC31

Citation	Subject	Brief description	Applies to Subpart UUUU
§ 63.6(f)(1)	SSM Exemption	You must comply with emission standards at all times except during SSM.	No, see 40 CFR 63.5515(a).
§ 63.6(f)(2) and (3)	Methods for Determining Compliance/Finding of Compliance.	Compliance based on performance test, operation and maintenance plans, records, inspection.	Yes.
§ 63.6(g)(1) through (3).	Alternative Standard	Procedures for getting an alternative standard.	Yes.
§ 63.6(h)(1)	SSM Exemption	You must comply with opacity and visible emission standards at all times except during SSM.	No, see CFR 63.5515(a).
§ 63.6(h)(2) through (9).	Opacity and Visible Emission (VE) Standards.	Requirements for opacity and visible emission limits.	Yes, but only for flares for which EPA Method 22 observations are required under § 63.11(b).
§ 63.6(i)(1) through (16).	Compliance Extension	Procedures and criteria for Administrator to grant compliance extension.	Yes.
§ 63.6(j)	Presidential Compliance Exemption.	President may exempt source category from requirement to comply with subpart.	Yes.
§ 63.7(a)(1) and (2)	Performance Test Dates	Dates for conducting initial performance test; testing and other compliance demonstrations; must conduct 180 days after first subject to subpart.	Yes.
§ 63.7(a)(3)	Section 114 Authority	Administrator may require a performance test under CAA section 114 at any time.	Yes.
§ 63.7(b)(1)	Notification of Performance Test	Must notify Administrator 60 days before the test.	Yes.
§ 63.7(b)(2)	Notification of Rescheduling	If rescheduling a performance test is necessary, must notify Administrator 5 days before scheduled date of rescheduled test.	Yes.
§ 63.7(c)	Quality Assurance and Test Plan	Requirement to submit site-specific test plan 60 days before the test or on date Administrator agrees with; test plan approval procedures; performance audit requirements; internal and external QA procedures for testing.	No.
§ 63.7(d)	Testing Facilities	Requirements for testing facilities	Yes.
§ 63.7(e)(1)	Performance Testing	Performance tests must be conducted under representative conditions; cannot conduct performance tests during SSM; not a violation to exceed standard during SSM.	No, see § 63.5535 and Table 4.
§ 63.7(e)(2)	Conditions for Conducting Performance Tests.	Must conduct according to this subpart and EPA test methods unless Administrator approves alternative.	Yes.
§ 63.7(e)(3)	Test Run Duration	Must have three test runs of at least 1 hour each; compliance is based on arithmetic mean of three runs; conditions when data from an additional test run can be used.	Yes.
§ 63.7(f)	Alternative Test Method	Procedures by which Administrator can grant approval to use an alternative test method.	Yes.
§ 63.7(g)	Performance Test Data Analysis	Must include raw data in performance test report; must submit performance test data 60 days after end of test with the Notification of Compliance Status Report; keep data for 5 years.	Yes.
§ 63.7(h)	Waiver of Tests	Procedures for Administrator to waive performance test.	Yes.

sfrattini on LAPJZKW1R2 with $$_JOB
VerDate Sep<11>2014 09:16 Apr 04, 2023 Jkt 256165 PO 00000 Frm 01182 Fmt 8010 Sfmt 8002 Q:\40\256165.XXX PC31

Citation	Subject	Brief description	Applies to Subpart UUUU
§ 63.8(a)(1)	Applicability of Monitoring Requirements.	Subject to all monitoring requirements in standard.	Yes.
§ 63.8(a)(2)	Performance Specifications	Performance specifications in appendix B of 40 CFR part 60 apply.	Yes.
§ 63.8(a)(3)	[Reserved].		
§ 63.8(a)(4)	Monitoring with Flares	Unless your subpart says otherwise, the requirements for flares in § 63.11 apply.	Yes.
§ 63.8(b)(1)	Monitoring	Must conduct monitoring according to standard unless Administrator approves alternative.	Yes.
§ 63.8(b)(2) and (3)	Multiple Effluents and Multiple Monitoring Systems.	Specific requirements for installing monitoring systems; must install on each effluent before it is combined and before it is released to the atmosphere unless Administrator approves otherwise; if more than one monitoring system on an emission point, must report all monitoring system results, unless one monitoring system is a backup.	Yes.
§ 63.8(c)(1) and (c)(1)(i).	General Duty to Minimize Emissions and CMS Operation.	Maintain monitoring system in a manner consistent with good air pollution control practices.	No, for new or reconstructed sources which commenced construction or reconstruction after September 9, 2019. For all other affected sources, Yes before December 30, 2020, and No thereafter. See 40 CFR 63.5515(b).
§ 63.8(c)(1)(ii)	Parts for Routine Repairs	Keep parts for routine repairs readily available.	Yes.
§ 63.8(c)(1)(iii)	Requirements to develop SSM Plan for CMS.	Develop a written SSM plan for CMS.	No, for new or reconstructed sources which commenced construction or reconstruction after September 9, 2019. For all other affected sources, Yes before December 30, 2020, and No thereafter. See 40 CFR 63.5515(c).
§ 63.8(c)(2) and (3)	Monitoring System Installation	Must install to get representative emission of parameter measurements; must verify operational status before or at performance test.	Yes.
§ 63.8(c)(4)	CMS Requirements	CMS must be operating except during breakdown, out-of control, repair, maintenance, and high-level calibration drifts.	No. Replaced with language in § 63.5560.
§ 63.8(c)(4)(i) and (ii)	CMS Requirements	Continuous opacity monitoring systems (COMS) must have a minimum of one cycle of sampling and analysis for each successive 10-second period and one cycle of data recording for each successive 6-minute period; CEMS must have a minimum of one cycle of operation for each successive 15-minute period.	Yes, except that § 63.8(c)(4)(i) does not apply because subpart UUUU does not require COMS.
§ 63.8(c)(5)	COMS Minimum Procedures	COMS minimum procedures	No. Subpart UUUU does not require COMS.
§ 63.8(c)(6)	CMS Requirements	Zero and high level calibration check requirements; out-of-control periods.	No. Replaced with language in § 63.5545.
§ 63.8(c)(7) and (8)	CMS Requirements	Out-of-control periods, including reporting.	No. Replaced with language in § 63.5580(c)(6).

sfrattini on LAPJZKW1R2 with $$_JOB
VerDate Sep<11>2014 09:16 Apr 04, 2023 Jkt 256165 PO 00000 Frm 01183 Fmt 8010 Sfmt 8002 Q:\40\256165.XXX PC31

Citation	Subject	Brief description	Applies to Subpart UUUU
§ 63.8(d)	CMS Quality Control	Requirements for CMS quality control, including calibration, etc.; must keep quality control plan on record for 5 years; keep old versions for 5 years after revisions; program of correction action to be included in plan required under § 63.8(d)(2).	No, except for requirements in § 63.8(d)(2).
§ 63.8(e)	CMS Performance Evaluation	Notification, performance evaluation test plan, reports.	Yes, except that § 63.8(e)(5)(ii) does not apply because subpart UUUU does not require COMS.
§ 63.8(f)(1) through (5).	Alternative Monitoring Method	Procedures for Administrator to approve alternative monitoring.	Yes, except that no site-specific test plan is required. The request to use an alternative monitoring method must be submitted with the notification of performance test or CEMS performance evaluation or 60 days prior to any initial compliance demonstration.
§ 63.8(f)(6)	Alternative to Relative Accuracy Test.	Procedures for Administrator to approve alternative relative accuracy tests for CEMS.	Yes.
§ 63.8(g)(1) through (4).	Data Reduction	COMS 6-minute averages calculated over at least 36 evenly spaced data points; CEMS 1-hour averages computed over at least four equally spaced data points; data that cannot be used in average.	No. Replaced with language in § 63.5545(e).
§ 63.8(g)(5)	Data Reduction	Data that cannot be used in computing averages for CEMS and COMS.	No. Replaced with language in § 63.5560(b).
§ 63.9(a)	Notification Requirements	Applicability and State delegation	Yes.
§ 63.9(b)(1) through (5).	Initial Notifications	Submit notification subject 120 days after effective date; notification of intent to construct or reconstruct; notification of commencement of construction or reconstruction; notification of startup; contents of each.	Yes.
§ 63.9(c)	Request for Compliance Extension.	Can request if cannot comply by date or if installed BACT/LAER.	Yes.
§ 63.9(d)	Notification of Special Compliance Requirements for New Source.	For sources that commence construction between proposal and promulgation and want to comply 3 years after effective date.	Yes.
§ 63.9(e)	Notification of Performance Test	Notify Administrator 60 days prior	Yes.
§ 63.9(f)	Notification of VE or Opacity Test	Notify Administrator 30 days prior	Yes, but only for flares for which EPA Method 22 observations are required as part of a flare compliance assessment.
§ 63.9(g)	Additional Notifications When Using CMS.	Notification of performance evaluation; notification using COMS data; notification that exceeded criterion for relative accuracy.	Yes, except that § 63.9(g)(2) does not apply because subpart UUUU does not require COMS.
§ 63.9(h)(1) through (6).	Notification of Compliance Status Report.	Contents; due 60 days after end of performance test or other compliance demonstration, except for opacity or VE, which are due 30 days after; when to submit to federal vs. state authority.	Yes, except that Table 7 to this subpart specifies the submittal date for the notification. The contents of the notification will also include the results of EPA Method 22 observations required as part of a flare compliance assessment.
§ 63.9(i)	Adjustment of Submittal Deadlines.	Procedures for Administrator to approve change in when notifications must be submitted.	Yes.

sfrattini on LAPJZKW1R2 with $$_JOB
VerDate Sep<11>2014 09:16 Apr 04, 2023 Jkt 256165 PO 00000 Frm 01184 Fmt 8010 Sfmt 8002 Q:\40\256165.XXX PC31

Citation	Subject	Brief description	Applies to Subpart UUUU
§ 63.9(j)	Change in previous information	Must submit within 15 days of the change.	Yes, except the notification for all but change in major source status must be submitted as part of the next semiannual compliance report, as specified in Table 8 to this subpart.
§ 63.9(k)	Electronic reporting procedures	Procedure for electronically reporting the notification required by § 63.9(j).	Yes, as specified in § 63.9(j).
§ 63.10(a)	Recordkeeping and Reporting	Applies to all, unless compliance extension; when to submit to federal vs. state authority; procedures for owners of more than one source.	Yes.
§ 63.10(b)(1)	Recordkeeping and Reporting	General requirements; keep all records readily available; keep for 5 years.	Yes.
§ 63.10(b)(2)(i)	Recordkeeping of Occurrence and Duration of Startups and Shutdowns.	Records of occurrence and duration of each startup or shutdown that causes source to exceed emission limitation.	No, for new or reconstructed sources which commenced construction or reconstruction after September 9, 2019.For all other affected sources, Yes before December 29, 2020, and No thereafter.
§ 63.10(b)(2)(ii)	Recordkeeping of Failures to Meet a Standard.	Records of occurrence and duration of each malfunction of operation or air pollution control and monitoring equipment.	No, see Table 9 for recordkeeping of (1) date, time and duration; (2) listing of affected source or equipment, and an estimate of the quantity of each regulated pollutant emitted over the standard; and (3) actions to minimize emissions and correct the failure.
§ 63.10(b)(2)(iii)	Maintenance Records	Records of maintenance performed on air pollution control and monitoring equipment.	Yes.
§ 63.10(b)(2)(iv) and (v).	Actions Taken to Minimize Emissions During SSM.	Records of actions taken during SSM to minimize emissions.	No, for new or reconstructed sources which commenced construction or reconstruction after September 9, 2019. For all other affected sources, Yes before December 30, 2020, and No thereafter.
§ 63.10(b)(2)(vi), (x), and (xi).	CMS Records	Malfunctions, inoperative, out-of-control; calibration checks, adjustments, maintenance.	Yes.
§ 63.10(b)(2)(vii) through (ix).	Records	Measurements to demonstrate compliance with emission limits; performance test, performance evaluation, and opacity/VE observation results; measurements to determine conditions of performance tests and performance evaluations.	Yes, including results of EPA Method 22 observations required as part of a flare compliance assessment.
§ 63.10(b)(2)(xii)	Records	Records when under waiver	Yes.
§ 63.10(b)(2)(xiii)	Records	Records when using alternative to relative accuracy test.	Yes.
§ 63.10(b)(2)(xiv)	Records	All documentation supporting Initial Notification and Notification of Compliance Status Report.	Yes.
§ 63.10(b)(3)	Records	Applicability determinations	Yes.
§ 63.10(c)(1) through (6), (9) through (14).	Records	Additional records for CMS	Yes.
§ 63.10(c)(7) and (8)	Records	Records of excess emissions and parameter monitoring exceedances for CMS.	No. Replaced with language in Table 9 to this subpart.

sfrattini on LAPJZKW1R2 with $$_JOB
VerDate Sep<11>2014 09:16 Apr 04, 2023 Jkt 256165 PO 00000 Frm 01185 Fmt 8010 Sfmt 8002 Q:\40\256165.XXX PC31

Citation	Subject	Brief description	Applies to Subpart UUUU
§ 63.10(c)(15)	Use of SSM Plan	Use SSM plan to satisfy recordkeeping requirements for identification of malfunction, correction action taken, and nature of repairs to CMS.	No, for new or reconstructed sources which commenced construction or reconstruction after September 9, 2019. For all other affected sources, Yes before December 30, 2020, and No thereafter. See 40 CFR 63.5515(c).
§ 63.10(d)(1)	General Reporting Requirements	Requirement to report	Yes.
§ 63.10(d)(2)	Report of Performance Test Results.	When to submit to federal or state authority.	Yes, except that Table 7 to this subpart specifies the submittal date for the Notification of Compliance Status Report.
§ 63.10(d)(3)	Reporting Opacity or VE Observations.	What to report and when	Yes, but only for flares for which EPA Method 22 observations are required as part of a flare compliance assessment.
§ 63.10(d)(4)	Progress Reports	Must submit progress reports on schedule if under compliance extension.	Yes.
§ 63.10(d)(5)(i)	Periodic SSM Reports	Contents and submission of periodic SSM reports.	No, for new or reconstructed sources which commenced construction or reconstruction after September 9, 2019. For all other affected sources, Yes before December 30, 2020, and No thereafter. See § 63.5580(c)(4) and Table 8 for malfunction reporting requirements.
§ 63.10(d)(5)(ii)	Immediate SSM Reports	Contents and submission of immediate SSM reports.	No, for new or reconstructed sources which commenced construction or reconstruction after September 9, 2019. For all other affected sources, Yes before December 29, 2020, except that the immediate SSM report must be submitted as part of the next semiannual compliance report, as specified in Table 8 to this subpart, and No thereafter.
§ 63.10(e)(1) and (2)	Additional CMS Reports	Must report results for each CEMS on a unit; written copy of performance evaluation; three copies of COMS performance evaluation.	Yes, except that § 63.10(e)(2)(ii) does not apply because subpart UUUU does not require COMS.
§ 63.10(e)(3)(i) through (iii).	Reports	Schedule for reporting excess emissions and parameter monitor exceedance (now defined as deviations).	No. Replaced with language in § 63.5580.
§ 63.10(e)(3)(iv)	Excess Emissions Reports	Requirement to revert to quarterly submission if there is an excess emissions and parameter monitor exceedance (now defined as deviations); provision to request semiannual reporting after compliance for 1 year; submit report by 30th day following end of quarter or calendar half; if there has not been an exceedance or excess emission (now defined as deviations), report contents is a statement that there have been no deviations.	No. Replaced with language in § 63.5580.
§ 63.10(e)(3)(v)	Excess Emissions Reports	Must submit report containing all of the information in § 63.10(c)(5) through (13), § 63.8(c)(7) and (8).	No. Replaced with language in § 63.5580.

sfrattini on LAPJZKW1R2 with $$_JOB
VerDate Sep<11>2014 09:16 Apr 04, 2023 Jkt 256165 PO 00000 Frm 01186 Fmt 8010 Sfmt 8002 Q:\40\256165.XXX PC31

Citation	Subject	Brief description	Applies to Subpart UUUU
§ 63.10(e)(3)(vi) through (viii).	Excess Emissions Report and Summary Report.	Requirements for reporting excess emissions for CMS (now called deviations); requires all of the information in § 63.10(c)(5) through (13), § 63.8(c)(7) and (8).	No. Replaced with language in § 63.5580.
§ 63.10(e)(4)	Reporting COMS Data	Must submit COMS data with performance test data.	No. Subpart UUUU does not require COMS.
§ 63.10(f)	Waiver for Recordkeeping or Reporting.	Procedures for Administrator to waive.	Yes.
§ 63.11	Control and Work Practice Requirements.	Requirements for flares and alternative work practice for equipment leaks.	Yes.
§ 63.12	State Authority and Delegations	State authority to enforce standards.	Yes.
§ 63.13	Addresses	Addresses where reports, notifications, and requests are sent.	Yes.
§ 63.14	Incorporations by Reference	Test methods incorporated by reference.	Yes.
§ 63.15	Availability of Information and Confidentiality.	Public and confidential information.	Yes.
§ 63.16	Performance Track Provisions	Requirements for Performance Track member facilities.	Yes.

[85 FR 40019, July 2, 2020, as amended at 85 FR 73910, Nov. 19, 2020]

Subpart VVVV—National Emission Standards for Hazardous Air Pollutants for Boat Manufacturing

SOURCE: 66 FR 44232, Aug. 22, 2001, unless otherwise noted.

WHAT THE SUBPART COVERS

§ 63.5680 What is the purpose of this subpart?

(a) This subpart establishes national emission standards for hazardous air pollutants (HAP) for new and existing boat manufacturing facilities with resin and gel coat operations, carpet and fabric adhesive operations, or aluminum recreational boat surface coating operations. This subpart also establishes requirements to demonstrate initial and continuous compliance with the emission standards.

§ 63.5683 Does this subpart apply to me?

(a) This subpart applies to you if you meet both of the criteria listed in paragraphs (a)(1) and (2) of this section.

(1) You are the owner or operator of a boat manufacturing facility that builds fiberglass boats or aluminum recreational boats.

(2) Your boat manufacturing facility is a major source of HAP either in and of itself, or because it is collocated with other sources of HAP, such that all sources combined constitute a major source.

(b) A boat manufacturing facility is a facility that manufactures hulls or decks of boats from fiberglass or aluminum, or assembles boats from premanufactured hulls and decks, or builds molds to make fiberglass hulls or decks. A facility that manufactures only parts of boats (such as hatches, seats, or lockers) or boat trailers is not considered a boat manufacturing facility for the purpose of this subpart.

(c) A major source is any stationary source or group of stationary sources located within a contiguous area and under common control that emits or can potentially emit, considering controls, in the aggregate, 9.1 megagrams (10 tons) or more per year of a single HAP or 22.7 megagrams (25 tons) or more per year of a combination of HAP.

(d) This subpart does not apply to aluminum coating operations on aluminum boats intended for commercial or military (nonrecreational) use, antifoulant coatings, assembly adhesives, fiberglass hull and deck coatings, research and development activities,

sfrattini on LAPJZKW1R2 with $$_JOB
VerDate Sep<11>2014 09:16 Apr 04, 2023 Jkt 256165 PO 00000 Frm 01187 Fmt 8010 Sfmt 8010 Q:\40\256165.XXX PC31

mold sealing and release agents, mold stripping and cleaning solvents, and wood coatings as defined in § 63.5779. This subpart does not apply to materials contained in handheld aerosol cans.

§ 63.5686 How do I demonstrate that my facility is not a major source?

You can demonstrate that your facility is not a major source by using the procedures in either paragraph (a) or (b) of this section.

(a) *Emission option.* You must demonstrate that your facility does not emit, and does not have the potential to emit as defined in § 63.2, considering federally enforceable permit limits, 9.1 megagrams (10 tons) or more per year of a single HAP or 22.7 megagrams (25 tons) or more per year of a combination of HAP. To calculate your facility's potential to emit, you must include emissions from the boat manufacturing facility and all other sources that are collocated and under common ownership or control with the boat manufacturing facility.

(b) *Material consumption option.* This option can be used if you manufacture either fiberglass boats or aluminum recreational boats at your facility. You must meet the criteria in paragraph (b)(1), (2), or (3) of this section and comply with the requirements in paragraph (c) of this section. If you initially rely on the limits and criteria specified in paragraph (b)(1), (2), or (3) of this section to become an area source, but then exceed the relevant limit (without first obtaining and complying with other limits that keep your potential to emit HAP below major source levels), your facility will then become a major source, and you must comply with all applicable provisions of this subpart beginning on the compliance date specified in § 63.5695. Nothing in this paragraph is intended to preclude you from limiting your facility's potential to emit through other federally enforceable mechanisms available through your permitting authority.

(1) If your facility is primarily a fiberglass boat manufacturing facility, you must demonstrate that you consume less than 45.4 megagrams per rolling 12-month period of all combined polyester-and vinylester-based resins and gel coats (including tooling and production resins and gel coats, and clear gel coats), and you must demonstrate that at least 90 percent of total annual HAP emissions at the facility (including emissions from aluminum recreational boat manufacturing or other source categories) originate from the fiberglass boat manufacturing materials.

(2) If your facility is primarily an aluminum recreational boat manufacturing facility, you must demonstrate that it consumes less than 18.2 megagrams per rolling 12-month period of all combined surface coatings, aluminum wipedown solvents, application gun cleaning solvents, and carpet and fabric adhesives; and you must demonstrate that at least 90 percent of total annual HAP emissions at the facility (including emissions from fiberglass boat manufacturing or other source categories) originate from the aluminum recreational boat manufacturing materials.

(3) If your facility is a fiberglass boat or an aluminum recreational boat manufacturing facility, you must demonstrate that the boat manufacturing materials consumed per rolling 12-month period contain a total of less than 4.6 megagrams of any single HAP and less than 11.4 megagrams of all combined HAP, and you must demonstrate that at least 90 percent of total annual HAP emissions at the facility (including emissions from other source categories) originate from these boat manufacturing materials.

(c) If you use the material consumption option described in paragraph (b) of this section to demonstrate that you are not a major source, you must comply with the requirements of paragraphs (c)(1) through (3) of this section.

(1) If your facility has HAP emissions that do not originate from boat manufacturing operations or materials described in paragraph (b), then you must keep any records necessary to demonstrate that the 90 percent criterion is met.

(2) A rolling 12-month period includes the previous 12 months of operation. You must maintain records of the total amount of materials described in paragraph (b) of this section used each

sfrattini on LAPJZKW1R2 with $$_JOB
VerDate Sep<11>2014 09:16 Apr 04, 2023 Jkt 256165 PO 00000 Frm 01188 Fmt 8010 Sfmt 8010 Q:\40\256165.XXX PC31

month, and, if necessary, the HAP content of each material and the calculation of the total HAP consumed each month. Because records are needed for a 12-month period, you must keep records beginning no later than 12 months before the compliance date specified in § 63.5695. Records must be kept for 5 years after they are created.

(3) In determining whether the 90 percent criterion included in paragraph (b) of this section is met, you do not need to include materials used in routine janitorial, building, or facility grounds maintenance; personal uses by employees or other persons; or products used for maintaining motor vehicles operated by the facility.

§ 63.5689 What parts of my facility are covered by this subpart?

The affected source (the portion of your boat manufacturing facility covered by this subpart) is the combination of all of the boat manufacturing operations listed in paragraphs (a) through (f) of this section.

(a) Open molding resin and gel coat operations (including pigmented gel coat, clear gel coat, production resin, tooling gel coat, and tooling resin).

(b) Closed molding resin operations.

(c) Resin and gel coat mixing operations.

(d) Resin and gel coat application equipment cleaning operations.

(e) Carpet and fabric adhesive operations.

(f) Aluminum hull and deck coating operations, including solvent wipedown operations and paint spray gun cleaning operations, on aluminum recreational boats.

§ 63.5692 How do I know if my boat manufacturing facility is a new source or an existing source?

(a) A boat manufacturing facility is a new source if it meets the criteria in paragraphs (a)(1) through (3) of this section.

(1) You commence construction of the affected source after July 14, 2000.

(2) It is a major source.

(3) It is a completely new boat manufacturing affected source where no other boat manufacturing affected source existed prior to the construction of the new source.

(b) For the purposes of this subpart, an existing source is any source that is not a new source.

§ 63.5695 When must I comply with this subpart?

You must comply with the standards in this subpart by the compliance dates specified in Table 1 to this subpart.

STANDARDS FOR OPEN MOLDING RESIN AND GEL COAT OPERATIONS

§ 63.5698 What emission limit must I meet for open molding resin and gel coat operations?

(a) You must limit organic HAP emissions from the five open molding operations listed in paragraphs (a)(1) through (5) of this section to the emission limit specified in paragraph (b) of this section. Operations listed in paragraph (d) are exempt from this limit.

(1) Production resin.

(2) Pigmented gel coat.

(3) Clear gel coat.

(4) Tooling resin.

(5) Tooling gel coat.

(b) You must limit organic HAP emissions from open molding operations to the limit specified by equation 1 of this section, based on a 12-month rolling average.

$$\text{HAP Limit} = \left[46\left(M_R\right) + 159\left(M_{PG}\right) + 291\left(M_{CG}\right) + 54\left(M_{TR}\right) + 214\left(M_{TG}\right)\right] \qquad \text{(Eq. 1)}$$

Where:

HAP Limit= total allowable organic HAP that can be emitted from the open molding operations, kilograms.

M_R = mass of production resin used in the past 12 months, excluding any materials exempt under paragraph (d) of this section, megagrams.

sfrattini on LAPJZKW1R2 with $$_JOB
VerDate Sep<11>2014 09:16 Apr 04, 2023 Jkt 256165 PO 00000 Frm 01189 Fmt 8010 Sfmt 8010 Q:\40\256165.XXX PC31
ER22AU01.011</MATH>

M_{PG} = mass of pigmented gel coat used in the past 12 months, excluding any materials exempt under paragraph (d) of this section, megagrams.

M_{CG} = mass of clear gel coat used in the past 12 months, excluding any materials exempt under paragraph (d) of this section, megagrams.

M_{TR} = mass of tooling resin used in the past 12 months, excluding any materials exempt under paragraph (d) of this section, megagrams.

M_{TG} = mass of tooling gel coat used in the past 12 months, excluding any materials exempt under paragraph (d) of this section, megagrams.

(c) The open molding emission limit is the same for both new and existing sources.

(d) The materials specified in paragraphs (d)(1) through (3) of this section are exempt from the open molding emission limit specified in paragraph (b) of this section.

(1) Production resins (including skin coat resins) that must meet specifications for use in military vessels or must be approved by the U.S. Coast Guard for use in the construction of lifeboats, rescue boats, and other life-saving appliances approved under 46 CFR subchapter Q or the construction of small passenger vessels regulated by 46 CFR subchapter T. Production resins for which this exemption is used must be applied with nonatomizing (non-spray) resin application equipment. You must keep a record of the resins for which you are using this exemption.

(2) Pigmented, clear, and tooling gel coat used for part or mold repair and touch up. The total gel coat materials included in this exemption must not exceed 1 percent by weight of all gel coat used at your facility on a 12-month rolling-average basis. You must keep a record of the amount of gel coats used per month for which you are using this exemption and copies of calculations showing that the exempt amount does not exceed 1 percent of all gel coat used.

(3) Pure, 100 percent vinylester resin used for skin coats. This exemption does not apply to blends of vinylester and polyester resins used for skin coats. The total resin materials included in the exemption cannot exceed 5 percent by weight of all resin used at your facility on a 12-month rolling-average basis. You must keep a record of the amount of 100 percent vinylester skin coat resin used per month that is eligible for this exemption and copies of calculations showing that the exempt amount does not exceed 5 percent of all resin used.

§ 63.5701 What are my options for complying with the open molding emission limit?

You must use one or more of the options listed in paragraphs (a) through (c) of this section to meet the emission limit in § 63.5698 for the resins and gel coats used in open molding operations at your facility.

(a) *Maximum achievable control technology (MACT) model point value averaging (emissions averaging) option.* (1) Demonstrate that emissions from the open molding resin and gel coat operations that you average meet the emission limit in § 63.5698 using the procedures described in § 63.5710. Compliance with this option is based on a 12-month rolling average.

(2) Those operations and materials not included in the emissions average must comply with either paragraph (b) or (c) of this section.

(b) *Compliant materials option.* Demonstrate compliance by using resins and gel coats that meet the organic HAP content requirements in Table 2 to this subpart. Compliance with this option is based on a 12-month rolling average.

(c) *Add-on control option.* Use an enclosure and add-on control device, and demonstrate that the resulting emissions meet the emission limit in § 63.5698. Compliance with this option is based on control device performance testing and control device monitoring.

§ 63.5704 What are the general requirements for complying with the open molding emission limit?

(a) *Emissions averaging option.* For those open molding operations and materials complying using the emissions averaging option, you must demonstrate compliance by performing the steps in paragraphs (a)(1) through (5) of this section.

(1) Use the methods specified in § 63.5758 to determine the organic HAP content of resins and gel coats.

sfrattini on LAPJZKW1R2 with $$_JOB
VerDate Sep<11>2014 09:16 Apr 04, 2023 Jkt 256165 PO 00000 Frm 01190 Fmt 8010 Sfmt 8010 Q:\40\256165.XXX PC31

(2) Complete the calculations described in § 63.5710 to show that the organic HAP emissions do not exceed the limit specified in § 63.5698.

(3) Keep records as specified in paragraphs (a)(3)(i) through (iv) of this section for each resin and gel coat.

(i) Hazardous air pollutant content.

(ii) Amount of material used per month.

(iii) Application method used for production resin and tooling resin. This record is not required if all production resins and tooling resins are applied with nonatomized technology.

(iv) Calculations performed to demonstrate compliance based on MACT model point values, as described in § 63.5710.

(4) Prepare and submit the implementation plan described in § 63.5707 to the Administrator and keep it up to date.

(5) Submit semiannual compliance reports to the Administrator as specified in § 63.5764.

(b) *Compliant materials option.* For each open molding operation complying using the compliant materials option, you must demonstrate compliance by performing the steps in paragraphs (b)(1) through (4) of this section.

(1) Use the methods specified in § 63.5758 to determine the organic HAP content of resins and gel coats.

(2) Complete the calculations described in § 63.5713 to show that the weighted-average organic HAP content does not exceed the limit specified in Table 2 to this subpart.

(3) Keep records as specified in paragraphs (b)(3)(i) through (iv) of this section for each resin and gel coat.

(i) Hazardous air pollutant content.

(ii) Application method for production resin and tooling resin. This record is not required if all production resins and tooling resins are applied with nonatomized technology.

(iii) Amount of material used per month. This record is not required for an operation if all materials used for that operation comply with the organic HAP content requirements.

(iv) Calculations performed, if required, to demonstrate compliance based on weighted-average organic HAP content as described in § 63.5713.

(4) Submit semiannual compliance reports to the Administrator as specified in § 63.5764.

(c) *Add-on control option.* If you are using an add-on control device, you must demonstrate compliance by performing the steps in paragraphs (c)(1) through (5) of this section.

(1) Conduct a performance test of the control device as specified in §§ 63.5719 and 63.5722 to demonstrate initial compliance.

(2) Use the performance test results to determine control device parameters to monitor after the performance test as specified in § 63.5725.

(3) Comply with the operating limits specified in § 63.5715 and the control device and emission capture system monitoring requirements specified in § 63.5725 to demonstrate continuous compliance.

(4) Keep the records specified in § 63.5767.

(5) Submit to the Administrator the notifications and reports specified in §§ 63.5761 and 63.5764.

§ 63.5707 What is an implementation plan for open molding operations and when do I need to prepare one?

(a) You must prepare an implementation plan for all open molding operations for which you comply by using the emissions averaging option described in § 63.5704(a).

(b) The implementation plan must describe the steps you will take to bring the open molding operations covered by this subpart into compliance. For each operation included in the emissions average, your implementation plan must include the elements listed in paragraphs (b)(1) through (3) of this section.

(1) A description of each operation included in the average.

(2) The maximum organic HAP content of the materials used, the application method used (if any atomized resin application methods are used in the average), and any other methods used to control emissions.

(3) Calculations showing that the operations covered by the plan will comply with the open molding emission limit specified in § 63.5698.

(c) You must submit the implementation plan to the Administrator with

sfrattini on LAPJZKW1R2 with $$_JOB
VerDate Sep<11>2014 09:16 Apr 04, 2023 Jkt 256165 PO 00000 Frm 01191 Fmt 8010 Sfmt 8010 Q:\40\256165.XXX PC31

the notification of compliance status specified in § 63.5761.

(d) You must keep the implementation plan on site and provide it to the Administrator when asked.

(e) If you revise the implementation plan, you must submit the revised plan with your next semiannual compliance report specified in § 63.5764.

§ 63.5710 How do I demonstrate compliance using emissions averaging?

(a) Compliance using the emissions averaging option is demonstrated on a 12-month rolling-average basis and is determined at the end of every month (12 times per year). The first 12-month rolling-average period begins on the compliance date specified in § 63.5695.

(b) At the end of the twelfth month after your compliance date and at the end of every subsequent month, use equation 1 of this section to demonstrate that the organic HAP emissions from those operations included in the average do not exceed the emission limit in § 63.5698 calculated for the same 12-month period. (Include terms in equation 1 of § 63.5698 and equation 1 of this section for only those operations and materials included in the average.)

$$\text{HAP emissions} = \left[(PV_R)(M_R) + (PV_{PG})(M_{PG}) + (PV_{CG})(M_{CG}) + (PV_{TR})(M_{TR}) + (PV_{TG})(M_{TG})\right] \quad \text{(Eq. 1)}$$

Where:

HAP emissions= Organic HAP emissions calculated using MACT model point values for each operation included in the average, kilograms.

PV_R = Weighted-average MACT model point value for production resin used in the past 12 months, kilograms per megagram.

M_R = Mass of production resin used in the past 12 months, megagrams.

PV_{PG} = Weighted-average MACT model point value for pigmented gel coat used in the past 12 months, kilograms per megagram.

M_{PG} = Mass of pigmented gel coat used in the past 12 months, megagrams.

PV_{CG} = Weighted-average MACT model point value for clear gel coat used in the past 12 months, kilograms per megagram.

M_{CG} = Mass of clear gel coat used in the past 12 months, megagrams.

PV_{TR} = Weighted-average MACT model point value for tooling resin used in the past 12 months, kilograms per megagram.

M_{TR} = Mass of tooling resin used in the past 12 months, megagrams.

PV_{TG} = Weighted-average MACT model point value for tooling gel coat used in the past 12 months, kilograms per megagram.

M_{TG} = Mass of tooling gel coat used in the past 12 months, megagrams.

(c) At the end of every month, use equation 2 of this section to compute the weighted-average MACT model point value for each open molding resin and gel coat operation included in the average.

$$PV_{OP} = \frac{\sum_{i=1}^{n}(M_i\ PV_i)}{\sum_{i=1}^{n}(M_i)} \quad \text{(Eq. 2)}$$

Where:

PV_{OP} = weighted-average MACT model point value for each open molding operation (PV_R, PV_{PG}, PV_{CG}, PV_{TR}, and PV_{TG}) included in the average, kilograms of HAP per megagram of material applied.

M_i = mass of resin or gel coat i used within an operation in the past 12 months, megagrams.

n = number of different open molding resins and gel coats used within an operation in the past 12 months.

PV_i = the MACT model point value for resin or gel coat i used within an operation in the past 12 months, kilograms of HAP per megagram of material applied.

(d) You must use the equations in Table 3 to this subpart to calculate the MACT model point value (PV_i) for each resin and gel coat used in each operation in the past 12 months.

(e) If the organic HAP emissions, as calculated in paragraph (b) of this section, are less than the organic HAP limit calculated in § 63.5698(b) for the same 12-month period, then you are in compliance with the emission limit in

sfrattini on LAPJZKW1R2 with $$_JOB
VerDate Sep<11>2014 09:16 Apr 04, 2023 Jkt 256165 PO 00000 Frm 01192 Fmt 8010 Sfmt 8010 Q:\40\256165.XXX PC31
ER22AU01.012</MATH> ER22AU01.013</MATH>

§63.5698 for those operations and materials included in the average.

[66 FR 44232, Aug. 22, 2001; 66 FR 50504, Oct. 3, 2001]

§63.5713 How do I demonstrate compliance using compliant materials?

(a) Compliance using the organic HAP content requirements listed in Table 2 to this subpart is based on a 12-month rolling average that is calculated at the end of every month. The first 12-month rolling-average period begins on the compliance date specified in §63.5695. If you are using filled material (production resin or tooling resin), you must comply according to the procedure described in §63.5714.

(b) At the end of the twelfth month after your compliance date and at the end of every subsequent month, review the organic HAP contents of the resins and gel coats used in the past 12 months in each operation. If all resins and gel coats used in an operation have organic HAP contents no greater than the applicable organic HAP content limits in Table 2 to this subpart, then you are in compliance with the emission limit specified in §63.5698 for that 12-month period for that operation. In addition, you do not need to complete the weighted-average organic HAP content calculation contained in paragraph (c) of this section for that operation.

(c) At the end of every month, you must use equation 1 of this section to calculate the weighted-average organic HAP content for all resins and gel coats used in each operation in the past 12 months.

$$\text{Weighted-Average HAP Content } (\%) = \frac{\sum_{i=1}^{n} (M_i \text{ HAP}_i)}{\sum_{i=1}^{n} (M_i)} \qquad \text{(Eq. 1)}$$

Where:

M_i = mass of open molding resin or gel coat i used in the past 12 months in an operation, megagrams.

HAP_i = Organic HAP content, by weight percent, of open molding resin or gel coat i used in the past 12 months in an operation. Use the methods in §63.5758 to determine organic HAP content.

n = number of different open molding resins or gel coats used in the past 12 months in an operation.

(d) If the weighted-average organic HAP content does not exceed the applicable organic HAP content limit specified in Table 2 to this subpart, then you are in compliance with the emission limit specified in §63.5698.

§63.5714 How do I demonstrate compliance if I use filled resins?

(a) If you are using a filled production resin or filled tooling resin, you must demonstrate compliance for the filled material on an as-applied basis using equation 1 of this section.

$$PV_F = PV_u \times \frac{(100 - \%\ \text{Filler})}{100} \qquad \text{(Eq. 1)}$$

Where:

PV_F = The as-applied MACT model point value for a filled production resin or tooling resin, kilograms organic HAP per megagram of filled material.

PV_u = The MACT model point value for the neat (unfilled) resin, before filler is added, as calculated using the formulas in Table 3 to this subpart.

% Filler = The weight-percent of filler in the as-applied filled resin system.

(b) If the filled resin is used as a production resin and the value of PV_F calculated by equation 1 of this section does not exceed 46 kilograms of organic HAP per megagram of filled resin applied, then the filled resin is in compliance.

(c) If the filled resin is used as a tooling resin and the value of PV_F calculated by equation 1 of this section does not exceed 54 kilograms of organic

sfrattini on LAPJZKW1R2 with $$_JOB
VerDate Sep<11>2014 09:16 Apr 04, 2023 Jkt 256165 PO 00000 Frm 01193 Fmt 8010 Sfmt 8010 Q:\40\256165.XXX PC31
ER22au01.014</MATH> ER22au01.015</MATH>

HAP per megagram of filled resin applied, then the filled resin is in compliance.

(d) If you are including a filled resin in the emissions averaging procedure described in § 63.5710, then use the value of PV_F calculated using equation 1 of this section for the value of PV i in equation 2 of § 63.5710.

DEMONSTRATING COMPLIANCE FOR OPEN MOLDING OPERATIONS CONTROLLED BY ADD-ON CONTROL DEVICES

§ 63.5715 What operating limits must I meet?

(a) For open molding operations on which you use a thermal oxidizer as an add-on control device, you must meet the operating limits specified in Table 4 to this subpart that apply to the emission capture system and thermal oxidizer. You must establish the operating limits during the performance test according to the procedures in § 63.5725. You must meet the operating limits at all times after you establish them.

(b) If you use an add-on control device other than a thermal oxidizer, or wish to monitor an alternative parameter and comply with a different operating limit, you must apply to the Administrator for approval of alternative monitoring under § 63.8(f).

§ 63.5716 When must I conduct a performance test?

(a) If your source is an existing source, you must complete the add-on control device performance test no later than the compliance date specified in § 63.5695.

(b) If your source is a new source, you must complete the add-on control device performance test no later than 180 days after the compliance date specified in § 63.5695.

(c) You must conduct a performance test every 5 years as part of renewing your 40 CFR part 70 or 71 operating permit.

§ 63.5719 How do I conduct a performance test?

(a) You must capture the emissions using a permanent enclosure (such as a spray booth or similar containment device) and direct the captured emissions to the add-on control device.

(b) You must measure emissions as specified in paragraph (b)(1) or (2) of this section.

(1) If the enclosure vented to the control device is a permanent total enclosure as defined in Method 204 of appendix M to 40 CFR part 51, then you may measure emissions only at the outlet of the control device.

(2) If the permanent enclosure vented to the control device is not a total enclosure, you must build a temporary total enclosure, as defined in Method 204 of appendix M to 40 CFR part 51, around the permanent enclosure. You must then simultaneously measure emissions from the control device outlet and the emissions from the temporary total enclosure outlet. You determine compliance from the combined emissions from the control device outlet and the temporary total enclosure outlet.

(c) You must conduct the control device performance test using the emission measurement methods specified in paragraphs (c)(1) through (4) of this section.

(1) Use either Method 1 or 1A of appendix A to 40 CFR part 60, as appropriate, to select the sampling sites.

(2) Use Method 2, 2A, 2C, 2D, 2F or 2G of appendix A to 40 CFR part 60, as appropriate, to measure gas volumetric flow rate.

(3) Use Method 18 of appendix A to 40 CFR part 60 to measure organic HAP emissions or use Method 25A of appendix A to 40 CFR part 60 to measure total gaseous organic emissions as a surrogate for total organic HAP emissions. If you use Method 25A, you must assume that all gaseous organic emissions measured as carbon are organic HAP emissions. If you use Method 18 and the number of organic HAP in the exhaust stream exceeds five, you must take into account the use of multiple chromatographic columns and analytical techniques to get an accurate measure of at least 90 percent of the total organic HAP mass emissions. Do not use Method 18 to measure organic HAP emissions from a combustion device; use instead Method 25A and assume that all gaseous organic mass

sfrattini on LAPJZKW1R2 with $$_JOB
VerDate Sep<11>2014 09:16 Apr 04, 2023 Jkt 256165 PO 00000 Frm 01194 Fmt 8010 Sfmt 8010 Q:\40\256165.XXX PC31

emissions measured as carbon are organic HAP emissions.

(4) You may use American Society for Testing and Materials (ASTM) D6420–99 (available for purchase from at least one of the following addresses: 100 Barr Harbor Drive, West Conshohocken, PA 19428–2959; or University Microfilms International, 300 North Zeeb Road, Ann Arbor, MI 48106.) in lieu of Method 18 of 40 CFR part 60, appendix A, under the conditions specified in paragraphs (c)(4)(i) through (iii) of this section.

(i) If the target compound(s) is listed in Section 1.1 of ASTM D6420–99 and the target concentration is between 150 parts per billion by volume and 100 parts per million by volume.

(ii) If the target compound(s) is not listed in Section 1.1 of ASTM D6420–99, but is potentially detected by mass spectrometry, an additional system continuing calibration check after each run, as detailed in Section 10.5.3 of ASTM D6420–99, must be followed, met, documented, and submitted with the performance test report even if you do not use a moisture condenser or the compound is not considered soluble.

(iii) If a minimum of one sample/analysis cycle is completed at least every 15 minutes.

(d) The control device performance test must consist of three runs and each run must last at least 1 hour. The production conditions during the test runs must represent normal production conditions with respect to the types of parts being made and material application methods. The production conditions during the test must also represent maximum potential emissions with respect to the organic HAP content of the materials being applied and the material application rates.

(e) During the test, you must also monitor and record separately the amounts of production resin, tooling resin, pigmented gel coat, clear gel coat, and tooling gel coat applied inside the enclosure that is vented to the control device.

§ 63.5722 How do I use the performance test data to demonstrate initial compliance?

Demonstrate initial compliance with the open molding emission limit as described in paragraphs (a) through (c) of this section:

(a) Calculate the organic HAP limit you must achieve using equation 1 of § 63.5698. For determining initial compliance, the organic HAP limit is based on the amount of material used during the performance test, in megagrams, rather than during the past 12 months. Calculate the limit using the megagrams of resin and gel coat applied inside the enclosure during the three runs of the performance test and equation 1 of § 63.5698.

(b) Add the total measured emissions, in kilograms, from all three of the 1-hour runs of the performance test.

(c) If the total emissions from the three 1-hour runs of the performance test are less than the organic HAP limit calculated in paragraph (a) of this section, then you have demonstrated initial compliance with the emission limit in § 63.5698 for those operations performed in the enclosure and controlled by the add-on control device.

§ 63.5725 What are the requirements for monitoring and demonstrating continuous compliance?

(a) You must establish control device parameters that indicate proper operation of the control device.

(b) You must install, operate, and maintain a continuous parameter monitoring system as specified in paragraphs (b)(1) through (8) of this section.

(1) The continuous parameter monitoring system must complete a minimum of one cycle of operation for each successive 15-minute period. You must have a minimum of four successive cycles of operation to have a valid hour of data.

(2) You must have valid data from at least 90 percent of the hours during which the process operated.

(3) You must determine the average of all recorded readings for each successive 3-hour period of the emission capture system and add-on control device operation.

(4) You must maintain the continuous parameter monitoring system at all times and have available necessary parts for routine repairs of the monitoring equipment.

sfrattini on LAPJZKW1R2 with $$_JOB
VerDate Sep<11>2014 09:16 Apr 04, 2023 Jkt 256165 PO 00000 Frm 01195 Fmt 8010 Sfmt 8010 Q:\40\256165.XXX PC31

(5) You must operate the continuous parameter monitoring system and collect emission capture system and add-on control device parameter data at all times that a controlled open molding operation is being performed, except during monitoring malfunctions, associated repairs, and required quality assurance or control activities (including, if applicable, calibration checks and required zero and span adjustments).

(6) You must not use emission capture system or add-on control device parameter data recorded during monitoring malfunctions, associated repairs, out-of-control periods, or required quality assurance or control activities when calculating data averages. You must use all the data collected during all other periods in calculating the data averages for determining compliance with the emission capture system and add-on control device operating limits.

(7) You must record the results of each inspection, calibration, and validation check.

(8) Any period for which the monitoring system is out-of-control, as defined in § 63.7(d)(7), or malfunctioning, and data are not available for required calculations is a deviation from the monitoring requirements. A monitoring malfunction is any sudden, infrequent, not reasonably preventable failure of the continuous parameter monitoring system to provide valid data. Monitoring failures that are caused in part by poor maintenance or careless operation are not malfunctions.

(c) *Enclosure bypass line.* You must meet the requirements of paragraphs (c)(1) and (2) of this section for each emission capture system enclosure that contains bypass lines that could divert emissions away from the add-on control device to the atmosphere.

(1) You must monitor or secure the valve or closure mechanism controlling the bypass line in a nondiverting position in such a way that the valve or closure mechanism cannot be opened without creating a record that the valve was opened. The method used to monitor or secure the valve or closure mechanism must meet one of the requirements specified in paragraphs (c)(1)(i) through (iv) of this section.

(i) *Flow control position indicator.* Install, calibrate, maintain, and operate according to the manufacturer's specifications a flow control position indicator that takes a reading at least once every 15 minutes and provides a record indicating whether the emissions are directed to the add-on control device or diverted from the add-on control device. The time of occurrence and flow control position must be recorded, as well as every time the flow direction is changed. The flow control position indicator must be installed at the entrance to any bypass line that could divert the emissions away from the add-on control device to the atmosphere.

(ii) *Car-seal or lock-and-key valve closures.* Secure any bypass line valve in the closed position with a car-seal or a lock-and-key type configuration. You must visually inspect the seal or closure mechanism at least once every month to ensure that the valve is maintained in the closed position, and the emissions are not diverted away from the add-on control device to the atmosphere.

(iii) *Valve closure continuous monitoring.* Ensure that any bypass line valve is in the closed (non-diverting) position through monitoring of valve position at least once every 15 minutes. You must inspect the monitoring system at least once every month to verify that the monitor will indicate valve position.

(iv) *Automatic shutdown system.* Use an automatic shutdown system in which the open molding operation is stopped when flow is diverted by the bypass line away from the add-on control device to the atmosphere when the open molding operation is running. You must inspect the automatic shutdown system at least once every month to verify that it will detect diversions of flow and shut down the open molding operation.

(2) If any bypass line is opened, you must include a description of why the bypass line was opened and the length of time it remained open in the semiannual compliance reports required in § 63.5764(d).

(d) *Thermal oxidizers.* If you are using a thermal oxidizer or incinerator as an

sfrattini on LAPJZKW1R2 with $$_JOB
VerDate Sep<11>2014 09:16 Apr 04, 2023 Jkt 256165 PO 00000 Frm 01196 Fmt 8010 Sfmt 8010 Q:\40\256165.XXX PC31

add-on control device, you must comply with the requirements in paragraphs (d)(1) through (6) of this section.

(1) You must install a combustion temperature monitoring device in the firebox of the thermal oxidizer or incinerator, or in the duct immediately downstream of the firebox before any substantial heat exchange occurs. You must meet the requirements in paragraphs (b) and (d)(1)(i) through (vii) of this section for each temperature monitoring device.

(i) Locate the temperature sensor in a position that provides a representative temperature.

(ii) Use a temperature sensor with a minimum tolerance of 2.2 °C or 0.75 percent of the temperature value, whichever is larger.

(iii) Shield the temperature sensor system from electromagnetic interference and chemical contaminants.

(iv) If a chart recorder is used, it must have a sensitivity in the minor division of at least 10 °C.

(v) Perform an electronic calibration at least semiannually according to the procedures in the manufacturer's owners manual. Following the electronic calibration, you must conduct a temperature sensor validation check in which a second or redundant temperature sensor placed nearby the process temperature sensor must yield a reading within 16.7 °C of the process temperature sensor's reading.

(vi) Conduct calibration and validation checks any time the sensor exceeds the manufacturer's specified maximum operating temperature range or install a new temperature sensor.

(vii) At least monthly, inspect all components for integrity and all electrical connections for continuity, oxidation, and galvanic corrosion.

(2) Before or during the performance test, you must conduct a performance evaluation of the combustion temperature monitoring system according to §63.8(e). Section 63.8(e) specifies the general requirements for continuous monitoring systems and requirements for notifications, the site-specific performance evaluation plan, conduct of the performance evaluation, and reporting of performance evaluation results.

(3) During the performance test required by §63.5716, you must monitor and record the combustion temperature and determine the average combustion temperature for the three 1-hour test runs. This average temperature is the minimum operating limit for the thermal oxidizer.

(4) Following the performance test, you must continuously monitor the combustion temperature and record the average combustion temperature no less frequently than every 15 minutes.

(5) You must operate the incinerator or thermal oxidizer so that the average combustion temperature in any 3-hour period does not fall below the average combustion temperature recorded during the performance test.

(6) If the average combustion temperature in any 3-hour period falls below the average combustion temperature recorded during the performance test, or if you fail to collect the minimum data specified in paragraph (d)(4) of this section, it is a deviation for the operating limit in §63.5715.

(e) *Other control devices.* If you are using a control device other a thermal oxidizer, then you must comply with alternative monitoring requirements and operating limits approved by the Administrator under §63.8(f).

(f) *Emission capture system.* For each enclosure in the emission capture system, you must comply with the requirements in paragraphs (f)(1) through (5) of this section.

(1) You must install a device to measure and record either the flow rate or the static pressure in the duct from each enclosure to the add-on control device.

(2) You must install a device to measure and record the pressure drop across at least one opening in each enclosure.

(3) Each flow measurement device must meet the requirements in paragraphs (b) and (f)(3)(i) through (iv) of this section.

(i) Locate the flow sensor in a position that provides a representative flow measurement in the duct between each enclosure in the emission capture system and the add-on control device.

(ii) Reduce swirling flow or abnormal velocity distributions due to upstream and downstream disturbances.

sfrattini on LAPJZKW1R2 with $$_JOB
VerDate Sep<11>2014 09:16 Apr 04, 2023 Jkt 256165 PO 00000 Frm 01197 Fmt 8010 Sfmt 8010 Q:\40\256165.XXX PC31

(iii) Conduct a flow sensor calibration check at least semiannually.

(iv) At least monthly, inspect all components for integrity, all electrical connections for continuity, and all mechanical connections for leakage.

(4) For each pressure measurement device, you must comply with the requirements in paragraphs (a) and (f)(4)(i) through (vii) of this section.

(i) Locate each pressure drop sensor in or as close to a position that provides a representative measurement of the pressure drop across each enclosure opening you are monitoring.

(ii) Locate each duct static pressure sensor in a position that provides a representative measurement of the static pressure in the duct between the enclosure and control device.

(iii) Minimize or eliminate pulsating pressure, vibration, and internal and external corrosion.

(iv) Check the pressure tap for plugging daily.

(v) Use an inclined manometer with a measurement sensitivity of 0.0004 millimeters mercury (mmHg) to check gauge calibration quarterly and transducer calibration monthly.

(vi) Conduct calibration checks any time the sensor exceeds the manufacturer's specified maximum operating pressure range or install a new pressure sensor.

(vii) At least monthly, inspect all components for integrity, all electrical connections for continuity, and all mechanical connections for leakage.

(5) For each capture device that is not part of a permanent total enclosure as defined in Method 204 in appendix M to 40 CFR part 51, you must establish an operating limit for either the gas volumetric flow rate or duct static pressure, as specified in paragraphs (f)(5)(i) and (ii) of this section. You must also establish an operating limit for pressure drop across at least one opening in each enclosure according to paragraphs (f)(5)(iii) and (iv) of this section. The operating limits for a permanent total enclosure are specified in Table 4 to this subpart.

(i) During the emission test required by § 63.5716 and described in § 63.5719, you must monitor and record either the gas volumetric flow rate or the duct static pressure for each separate enclosure in your emission capture system at least once every 15 minutes during each of the three test runs at a point in the duct between the enclosure and the add-on control device inlet.

(ii) Following the emission test, calculate and record the average gas volumetric flow rate or duct static pressure for the three test runs for each enclosure. This average gas volumetric flow rate or duct static pressure is the minimum operating limit for that specific enclosure.

(iii) During the emission test required by § 63.5716 and described in § 63.5719, you must monitor and record the pressure drop across the opening of each enclosure in your emission capture system at least once every 15 minutes during each of the three test runs.

(iv) Following the emission test, calculate and record the average pressure drop for the three test runs for each enclosure. This average pressure drop is the minimum operating limit for that specific enclosure.

STANDARDS FOR CLOSED MOLDING RESIN OPERATIONS

§ 63.5728 What standards must I meet for closed molding resin operations?

(a) If a resin application operation meets the definition of closed molding specified in § 63.5779, there is no requirement to reduce emissions from that operation.

(b) If the resin application operation does not meet the definition of closed molding, then you must comply with the limit for open molding resin operations specified in § 63.5698.

(c) Open molding resin operations that precede a closed molding operation must comply with the limit for open molding resin and gel coat operations specified in § 63.5698. Examples of these operations include gel coat or skin coat layers that are applied before lamination is performed by closed molding.

sfrattini on LAPJZKW1R2 with $$_JOB
VerDate Sep<11>2014 09:16 Apr 04, 2023 Jkt 256165 PO 00000 Frm 01198 Fmt 8010 Sfmt 8010 Q:\40\256165.XXX PC31

STANDARDS FOR RESIN AND GEL COAT MIXING OPERATIONS

§ 63.5731 What standards must I meet for resin and gel coat mixing operations?

(a) All resin and gel coat mixing containers with a capacity equal to or greater than 208 liters, including those used for on-site mixing of putties and polyputties, must have a cover with no visible gaps in place at all times.

(b) The work practice standard in paragraph (a) of this section does not apply when material is being manually added to or removed from a container, or when mixing or pumping equipment is being placed in or removed from a container.

(c) To demonstrate compliance with the work practice standard in paragraph (a) of this section, you must visually inspect all mixing containers subject to this standard at least once per month. The inspection should ensure that all containers have covers with no visible gaps between the cover and the container, or between the cover and equipment passing through the cover.

(d) You must keep records of which mixing containers are subject to this standard and the results of the inspections, including a description of any repairs or corrective actions taken.

STANDARDS FOR RESIN AND GEL COAT APPLICATION EQUIPMENT CLEANING OPERATIONS

§ 63.5734 What standards must I meet for resin and gel coat application equipment cleaning operations?

(a) For routine flushing of resin and gel coat application equipment (e.g., spray guns, flowcoaters, brushes, rollers, and squeegees), you must use a cleaning solvent that contains no more than 5 percent organic HAP by weight. For removing cured resin or gel coat from application equipment, no organic HAP content limit applies.

(b) You must store organic HAP-containing solvents used for removing cured resin or gel coat in containers with covers. The covers must have no visible gaps and must be in place at all times, except when equipment to be cleaned is placed in or removed from the container. On containers with a capacity greater than 7.6 liters, the distance from the top of the container to the solvent surface must be no less than 0.75 times the diameter of the container. Containers that store organic HAP-containing solvents used for removing cured resin or gel coat are exempt from the requirements of 40 CFR part 63, subpart T. Cured resin or gel coat means resin or gel coat that has changed from a liquid to a solid.

§ 63.5737 How do I demonstrate compliance with the resin and gel coat application equipment cleaning standards?

(a) Determine and record the organic HAP content of the cleaning solvents subject to the standards specified in § 63.5734 using the methods specified in § 63.5758.

(b) If you recycle cleaning solvents on site, you may use documentation from the solvent manufacturer or supplier or a measurement of the organic HAP content of the cleaning solvent as originally obtained from the solvent supplier for demonstrating compliance, subject to the conditions in § 63.5758 for demonstrating compliance with organic HAP content limits.

(c) At least once per month, you must visually inspect any containers holding organic HAP-containing solvents used for removing cured resin and gel coat to ensure that the containers have covers with no visible gaps. Keep records of the monthly inspections and any repairs made to the covers.

STANDARDS FOR CARPET AND FABRIC ADHESIVE OPERATIONS

§ 63.5740 What emission limit must I meet for carpet and fabric adhesive operations?

(a) You must use carpet and fabric adhesives that contain no more than 5 percent organic HAP by weight.

(b) To demonstrate compliance with the emission limit in paragraph (a) of this section, you must determine and record the organic HAP content of the carpet and fabric adhesives using the methods in § 63.5758.

sfrattini on LAPJZKW1R2 with $$_JOB
VerDate Sep<11>2014 09:16 Apr 04, 2023 Jkt 256165 PO 00000 Frm 01199 Fmt 8010 Sfmt 8010 Q:\40\256165.XXX PC31

STANDARDS FOR ALUMINUM RECREATIONAL BOAT SURFACE COATING OPERATIONS

§ 63.5743 What standards must I meet for aluminum recreational boat surface coating operations?

(a) For aluminum wipedown solvent operations and aluminum surface coating operations, you must comply with either the separate emission limits in paragraphs (a)(1) and (2) of this section, or the combined emission limit in paragraph (a)(3) of this section. Compliance with these limitations is based on a 12-month rolling average that is calculated at the end of every month.

(1) You must limit emissions from aluminum wipedown solvents to no more than 0.33 kilograms of organic HAP per liter of total coating solids applied from aluminum primers, clear coats, and top coats combined. No limit applies when cleaning surfaces are receiving decals or adhesive graphics.

(2) You must limit emissions from aluminum recreational boat surface coatings (including thinners, activators, primers, topcoats, and clear coats) to no more than 1.22 kilograms of organic HAP per liter of total coating solids applied from aluminum primers, clear coats, and top coats combined.

(3) You must limit emissions from the combined aluminum surface coatings and aluminum wipedown solvents to no more than 1.55 kilograms of organic HAP per liter of total coating solids applied from aluminum primers, clear coats, and top coats combined.

(b) You must comply with the work practice standard in paragraph (b)(1), (2), (3), or (4) of this section when cleaning aluminum coating spray guns with solvents containing more than 5 percent organic HAP by weight.

(1) Clean spray guns in an enclosed device. Keep the device closed except when you place spray guns in or remove them from the device.

(2) Disassemble the spray gun and manually clean the components in a vat. Keep the vat closed when you are not using it.

(3) Clean spray guns by placing solvent in the pressure pot and forcing the solvent through the gun. Do not use atomizing air during this procedure. Direct the used cleaning solvent from the spray gun into a container that you keep closed when you are not using it.

(4) An alternative gun cleaning process or technology approved by the Administrator according to the procedures in § 63.6(g).

§ 63.5746 How do I demonstrate compliance with the emission limits for aluminum wipedown solvents and aluminum coatings?

To demonstrate compliance with the emission limits for aluminum wipedown solvents and aluminum coatings specified in § 63.5743(a), you must meet the requirements of paragraphs (a) through (f) of this section.

(a) Determine and record the organic HAP content (kilograms of organic HAP per kilogram of material, or weight fraction) of each aluminum wipedown solvent and aluminum coating (including primers, topcoats, clear coats, thinners, and activators). Use the methods in § 63.5758 to determine organic HAP content.

(b) Use the methods in § 63.5758(b) to determine the solids content (liters of solids per liter of coating, or volume fraction) of each aluminum surface coating, including primers, topcoats, and clear coats. Keep records of the solids content.

(c) Use the methods in § 63.5758(c) to determine the density of each aluminum surface coating and wipedown solvent.

(d) Compliance is based on a 12-month rolling average calculated at the end of every month. The first 12-month rolling-average period begins on the compliance date specified in § 63.5695.

(e) At the end of the twelfth month after your compliance date and at the end of every subsequent month, use the procedures in § 63.5749 to calculate the organic HAP from aluminum wipedown solvents per liter of coating solids, and use the procedures in § 63.5752 to calculate the kilograms of organic HAP from aluminum coatings per liter of coating solids.

(f) Keep records of the calculations used to determine compliance.

(g) *Approval of alternative means of demonstrating compliance.* You may

sfrattini on LAPJZKW1R2 with $$_JOB
VerDate Sep<11>2014 09:16 Apr 04, 2023 Jkt 256165 PO 00000 Frm 01200 Fmt 8010 Sfmt 8010 Q:\40\256165.XXX PC31

apply to the Administrator for permission to use an alternative means (such as an add-on control system) of limiting emissions from aluminum wipedown solvent and coating operations and demonstrating compliance with the emission limits in §63.5743(a).

(1) The application must include the information listed in paragraphs (g)(1)(i) through (iii) of this section.

(i) An engineering evaluation that compares the emissions using the alternative means to the emissions that would result from using the strategy specified in paragraphs (a) through (e) of this section. The engineering evaluation may include the results from an emission test that accurately measures the capture efficiency and control device efficiency achieved by the control system and the composition of the associated coatings so that the emissions comparison can be made.

(ii) A proposed monitoring protocol that includes operating parameter values to be monitored for compliance and an explanation of how the operating parameter values will be established through a performance test.

(iii) Details of appropriate recordkeeping and reporting procedures.

(2) The Administrator will approve the alternative means of limiting emissions if the Administrator determines that HAP emissions will be no greater than if the source uses the procedures described in paragraphs (a) through (e) of this section to demonstrate compliance.

(3) The Administrator's approval may specify operation, maintenance, and monitoring requirements to ensure that emissions from the regulated operations are no greater than those that would otherwise result from regulated operations in compliance with this subpart.

§63.5749 How do I calculate the organic HAP content of aluminum wipedown solvents?

(a) Use equation 1 of this section to calculate the weighted-average organic HAP content of aluminum wipedown solvents used in the past 12 months.

$$HAP_{WD} = \frac{\sum_{j=1}^{n}(Vol_j)(D_j)(W_j)}{\sum_{i=1}^{m}(Vol_i)(Solids_i)} \qquad \text{(Eq. 1)}$$

Where:

HAP_{WD} = weighted-average organic HAP content of aluminum wipedown solvents, kilograms of HAP per liter of total coating solids from aluminum primers, top coats, and clear coats.

n = number of different wipedown solvents used in the past 12 months.

Vol_j = volume of aluminum wipedown solvent j used in the past 12 months, liters.

D_j = density of aluminum wipedown solvent j, kilograms per liter.

W_j = mass fraction of organic HAP in aluminum wipedown solvent j.

m = number of different aluminum surface coatings (primers, top coats, and clear coats) used in the past 12 months.

Vol_i = volume of aluminum primer, top coat, or clear coat i used in the past 12 months, liters.

$Solids_i$ = solids content aluminum primer, top coat, or clear coat i, liter solids per liter of coating.

(b) Compliance is based on a 12-month rolling average. If the weighted-average organic HAP content does not exceed 0.33 kilograms of organic HAP per liter of total coating solids, then you are in compliance with the emission limit specified in §63.5743(a)(1).

§63.5752 How do I calculate the organic HAP content of aluminum recreational boat surface coatings?

(a) Use equation 1 of this section to calculate the weighted-average HAP content for all aluminum surface coatings used in the past 12 months.

sfrattini on LAPJZKW1R2 with $$_JOB
VerDate Sep<11>2014 09:16 Apr 04, 2023 Jkt 256165 PO 00000 Frm 01201 Fmt 8010 Sfmt 8010 Q:\40\256165.XXX PC31
ER22AU01.016</MATH>

$$HAP_{SC} = \frac{\sum_{i=1}^{m}(Vol_i)(D_i)(W_i) + \sum_{k=1}^{D}(Vol_k)(D_k)(W_k)}{\sum_{i=1}^{m}(Vol_i)(Solids_i)} \quad \text{(Eq. 1)}$$

Where:

HAP_{SC} = weighted-average organic HAP content for all aluminum coating materials, kilograms of organic HAP per liter of coating solids.

m = number of different aluminum primers, top coats, and clear coats used in the past 12 months.

Vol_i = volume of aluminum primer, top coat, or clear coat i used in the past 12 months, liters.

D_i = density of coating i, kilograms per liter.

W_i = mass fraction of organic HAP in coating i, kilograms of organic HAP per kilogram of coating.

p = number of different thinners, activators, and other coating additives used in the past 12 months.

Vol_k = total volume of thinner, activator, or additive k used in the past 12 months, liters.

D_k = density of thinner, activator, or additive k, kilograms per liter.

W_k = mass fraction of organic HAP in thinner, activator, or additive k, kilograms of organic HAP per kilogram of thinner or activator.

$Solids_i$ = solids content of aluminum primer, top coat, or clear coat i, liter solids per liter of coating.

(b) Compliance is based on a 12-month rolling average. If the weighted-average organic HAP content does not exceed 1.22 kilograms of organic HAP per liter of coating solids, then you are in compliance with the emission limit specified in § 63.5743(a)(2).

§ 63.5753 How do I calculate the combined organic HAP content of aluminum wipedown solvents and aluminum recreational boat surface coatings?

(a) Use equation 1 of this section to calculate the combined weighted-average organic HAP content of aluminum wipedown solvents and aluminum recreational boat surface coatings.

$$HAP_{Combined} = HAP_{WD} + HAP_{SC} \quad \text{(Eq. 1)}$$

Where:

HAP_{WD} = the weighted-average organic HAP content of aluminum wipedown solvents used in the past 12 months, calculated using equation 1 of § 63.5749.

HAP_{SC} = the weighted average organic HAP content of aluminum recreational boat surface coatings used in the past 12 months, calculated using equation 1 of § 63.5752.

(b) Compliance is based on a 12-month rolling average. If the combined organic HAP content does not exceed 1.55 kilograms of organic HAP per liter of total coating solids, then you are in compliance with the emission limit specified in § 63.5743(a)(3).

§ 63.5755 How do I demonstrate compliance with the aluminum recreational boat surface coating spray gun cleaning work practice standards?

You must demonstrate compliance with the aluminum coating spray gun cleaning work practice standards by meeting the requirements of paragraph (a) or (b) of this section.

(a) Demonstrate that solvents used to clean the aluminum coating spray guns contain no more than 5 percent organic HAP by weight by determining organic HAP content with the methods in § 63.5758. Keep records of the organic HAP content determination.

(b) For solvents containing more than 5 percent organic HAP by weight,

sfrattini on LAPJZKW1R2 with $$_JOB
VerDate Sep<11>2014 09:16 Apr 04, 2023 Jkt 256165 PO 00000 Frm 01202 Fmt 8010 Sfmt 8010 Q:\40\256165.XXX PC31
ER22AU01.017</MATH> ER22AU01.018</MATH>

comply with the requirements in paragraph (b)(1) or (b)(2), and paragraph (b)(3) of this section.

(1) If you are using an enclosed spray gun cleaner, visually inspect it at least once per month to ensure that covers are in place and the covers have no visible gaps when the cleaner is not in use, and that there are no leaks from hoses or fittings.

(2) If you are manually cleaning the gun or spraying solvent into a container that can be closed, visually inspect all solvent containers at least once per month to ensure that the containers have covers and the covers fit with no visible gaps.

(3) Keep records of the monthly inspections and any repairs that are made to the enclosed gun cleaners or the covers.

METHODS FOR DETERMINING HAZARDOUS AIR POLLUTANT CONTENT

§ 63.5758 How do I determine the organic HAP content of materials?

(a) *Determine the organic HAP content for each material used.* To determine the organic HAP content for each material used in your open molding resin and gel coat operations, carpet and fabric adhesive operations, or aluminum recreational boat surface coating operations, you must use one of the options in paragraphs (a)(1) through (6) of this section.

(1) *Method 311 (appendix A to 40 CFR part 63).* You may use Method 311 for determining the mass fraction of organic HAP. Use the procedures specified in paragraphs (a)(1)(i) and (ii) of this section when determining organic HAP content by Method 311.

(i) Include in the organic HAP total each organic HAP that is measured to be present at 0.1 percent by mass or more for Occupational Safety and Health Administration (OSHA)-defined carcinogens as specified in 29 CFR 1910.1200(d)(4) and at 1.0 percent by mass or more for other compounds. For example, if toluene (not an OSHA carcinogen) is measured to be 0.5 percent of the material by mass, you do not need to include it in the organic HAP total. Express the mass fraction of each organic HAP you measure as a value truncated to four places after the decimal point (for example, 0.1234).

(ii) Calculate the total organic HAP content in the test material by adding up the individual organic HAP contents and truncating the result to three places after the decimal point (for example, 0.123).

(2) *Method 24 (appendix A to 40 CFR part 60).* You may use Method 24 to determine the mass fraction of non-aqueous volatile matter of aluminum coatings and use that value as a substitute for mass fraction of organic HAP.

(3) *ASTM D1259–85 (Standard Test Method for Nonvolatile Content of Resins).* You may use ASTM D1259–85 (available for purchase from ASTM) to measure the mass fraction of volatile matter of resins and gel coats for open molding operations and use that value as a substitute for mass fraction of organic HAP.

(4) *Alternative method.* You may use an alternative test method for determining mass fraction of organic HAP if you obtain prior approval by the Administrator. You must follow the procedure in § 63.7(f) to submit an alternative test method for approval.

(5) *Information from the supplier or manufacturer of the material.* You may rely on information other than that generated by the test methods specified in paragraphs (a)(1) through (4) of this section, such as manufacturer's formulation data, according to paragraphs (a)(5)(i) through (iii) of this section.

(i) Include in the organic HAP total each organic HAP that is present at 0.1 percent by mass or more for OSHA-defined carcinogens as specified in 29 CFR 1910.1200(d)(4) and at 1.0 percent by mass or more for other compounds. For example, if toluene (not an OSHA carcinogen) is 0.5 percent of the material by mass, you do not have to include it in the organic HAP total.

(ii) If the organic HAP content is provided by the material supplier or manufacturer as a range, then you must use the upper limit of the range for determining compliance. If a separate measurement of the total organic HAP content using the methods specified in paragraphs (a)(1) through (4) of this section exceeds the upper limit of the range of the total organic HAP content provided by the material supplier or

sfrattini on LAPJZKW1R2 with $$_JOB
VerDate Sep<11>2014 09:16 Apr 04, 2023 Jkt 256165 PO 00000 Frm 01203 Fmt 8010 Sfmt 8010 Q:\40\256165.XXX PC31

manufacturer, then you must use the measured organic HAP content to determine compliance.

(iii) If the organic HAP content is provided as a single value, you may assume the value is a manufacturing target value and actual organic HAP content may vary from the target value. If a separate measurement of the total organic HAP content using the methods specified in paragraphs (a)(1) through (4) of this section is less than 2 percentage points higher than the value for total organic HAP content provided by the material supplier or manufacturer, then you may use the provided value to demonstrate compliance. If the measured total organic HAP content exceeds the provided value by 2 percentage points or more, then you must use the measured organic HAP content to determine compliance.

(6) *Solvent blends.* Solvent blends may be listed as single components for some regulated materials in certifications provided by manufacturers or suppliers. Solvent blends may contain organic HAP which must be counted toward the total organic HAP content of the materials. When detailed organic HAP content data for solvent blends are not available, you may use the values for organic HAP content that are listed in Table 5 or 6 to this subpart. You may use Table 6 to this subpart only if the solvent blends in the materials you use do not match any of the solvent blends in Table 5 to this subpart and you know only whether the blend is either aliphatic or aromatic. However, if test results indicate higher values than those listed in Table 5 or 6 to this subpart, then the test results must be used for determining compliance.

(b) *Determine the volume fraction solids in aluminum recreational boat surface coatings.* To determine the volume fraction of coating solids (liters of coating solids per liter of coating) for each aluminum recreational boat surface coating, you must use one of the methods specified in paragraphs (b)(1) through (3) of this section. If the results obtained with paragraphs (b)(2) or (3) of this section do not to agree with those obtained according to paragraph (b)(1) of this section, you must use the results obtained with paragraph (b)(1) of this section to determine compliance.

(1) *ASTM Method D2697–86(1998) or D6093–97.* You may use ASTM Method D2697–86(1998) or D6093–97 (available for purchase from ASTM) to determine the volume fraction of coating solids for each coating. Divide the nonvolatile volume percent obtained with the methods by 100 to calculate volume fraction of coating solids.

(2) *Information from the supplier or manufacturer of the material.* You may obtain the volume fraction of coating solids for each coating from the supplier or manufacturer.

(3) *Calculation of volume fraction of coating solids.* You may determine it using equation 1 of this section:

$$\text{Solids} = 1 - \frac{m_{\text{volatiles}}}{D_{\text{avg}}} \qquad \text{(Eq. 1)}$$

Where:

Solids = volume fraction of coating solids, liters coating solids per liter coating.

$m_{\text{volatiles}}$ = Total volatile matter content of the coating, including organic HAP, volatile organic compounds, water, and exempt compounds, determined according to Method 24 in appendix A of 40 CFR part 60, grams volatile matter per liter coating.

D_{avg} = average density of volatile matter in the coating, grams volatile matter per liter volatile matter, determined from test results using ASTM Method D1475–90 (available for purchase from ASTM), information from the supplier or manufacturer of the material, or reference sources providing density or specific gravity data for pure materials. If there is disagreement between ASTM Method D1475–90 test results and other information sources, the test results will take precedence.

(c) *Determine the density of each aluminum recreational boat wipedown solvent and surface coating.* Determine the density of all aluminum recreational boat wipedown solvents, surface coatings, thinners, and other additives from test results using ASTM Method D1475–90, information from the supplier or manufacturer of the material, or reference sources providing density or specific gravity data for pure materials. If there is disagreement between ASTM Method D1475–90 test results and other information sources, you must

sfrattini on LAPJZKW1R2 with $$_JOB
VerDate Sep<11>2014 09:16 Apr 04, 2023 Jkt 256165 PO 00000 Frm 01204 Fmt 8010 Sfmt 8010 Q:\40\256165.XXX PC31
ER22AU01.019</MATH>

use the test results to demonstrate compliance.

NOTIFICATIONS, REPORTS, AND RECORDS

§ 63.5761 What notifications must I submit and when?

(a) You must submit all of the notifications in Table 7 to this subpart that apply to you by the dates in the table. The notifications are described more fully in 40 CFR part 63, subpart A, General Provisions, referenced in Table 8 to this subpart.

(b) If you change any information submitted in any notification, you must submit the changes in writing to the Administrator within 15 calendar days after the change.

§ 63.5764 What reports must I submit and when?

(a) You must submit the applicable reports specified in paragraphs (b) through (e) of this section. To the extent possible, you must organize each report according to the operations covered by this subpart and the compliance procedure followed for that operation.

(b) Unless the Administrator has approved a different schedule for submission of reports under § 63.10(a), you must submit each report by the dates in paragraphs (b)(1) through (5) of this section.

(1) If your source is not controlled by an add-on control device (i.e., you are complying with organic HAP content limits, application equipment requirements, or MACT model point value averaging provisions), the first compliance report must cover the period beginning 12 months after the compliance date specified for your source in § 63.5695 and ending on June 30 or December 31, whichever date is the first date following the end of the first 12-month period after the compliance date that is specified for your source in § 63.5695. If your source is controlled by an add-on control device, the first compliance report must cover the period beginning on the compliance date specified for your source in § 63.5695 and ending on June 30 or December 31, whichever date is the first date following the end of the first calendar half after the compliance date that is specified for your source in § 63.5695.

(2) The first compliance report must be postmarked or delivered no later than 60 calendar days after the end of the compliance reporting period specified in paragraph (b)(1) of this section.

(3) Each subsequent compliance report must cover the applicable semiannual reporting period from January 1 through June 30 or from July 1 through December 31.

(4) Each subsequent compliance report must be postmarked or delivered no later than 60 calendar days after the end of the semiannual reporting period.

(5) For each affected source that is subject to permitting regulations pursuant to 40 CFR part 70 or 71, and if the permitting authority has established dates for submitting semiannual reports pursuant to 40 CFR 70.6(a)(3)(iii)(A) or 40 CFR 71.6(a)(3)(iii)(A), you may submit the first and subsequent compliance reports according to the dates the permitting authority has established instead of according to the dates in paragraphs (b)(1) through (4) of this section.

(c) The compliance report must include the information specified in paragraphs (c)(1) through (7) of this section.

(1) Company name and address.

(2) A statement by a responsible official with that official's name, title, and signature, certifying the truth, accuracy, and completeness of the report.

(3) The date of the report and the beginning and ending dates of the reporting period.

(4) A description of any changes in the manufacturing process since the last compliance report.

(5) A statement or table showing, for each regulated operation, the applicable organic HAP content limit, application equipment requirement, or MACT model point value averaging provision with which you are complying. The statement or table must also show the actual weighted-average organic HAP content or weighted-average MACT model point value (if applicable) for each operation during each of the rolling 12-month averaging periods that end during the reporting period.

(6) If you were in compliance with the emission limits and work practice standards during the reporting period,

sfrattini on LAPJZKW1R2 with $$_JOB
VerDate Sep<11>2014 09:16 Apr 04, 2023 Jkt 256165 PO 00000 Frm 01205 Fmt 8010 Sfmt 8010 Q:\40\256165.XXX PC31

you must include a statement to that effect.

(7) If you deviated from an emission limit or work practice standard during the reporting period, you must also include the information listed in paragraphs (c)(7)(i) through (iv) of this section in the semiannual compliance report.

(i) A description of the operation involved in the deviation.

(ii) The quantity, organic HAP content, and application method (if relevant) of the materials involved in the deviation.

(iii) A description of any corrective action you took to minimize the deviation and actions you have taken to prevent it from happening again.

(iv) A statement of whether or not your facility was in compliance for the 12-month averaging period that ended at the end of the reporting period.

(d) If your facility has an add-on control device, you must submit semiannual compliance reports and quarterly excess emission reports as specified in § 63.10(e). The contents of the reports are specified in § 63.10(e).

[66 FR 44232, Aug. 22, 2001, as amended at 85 FR 15971, Mar. 20, 2020]

§ 63.5765 How do I submit my reports?

(a) Within 60 days after the date of completing each performance test required by this subpart, you must submit the results of the performance test following the procedures specified in paragraphs (a)(1) through (3) of this section.

(1) Data collected using test methods supported by the EPA's Electronic Reporting Tool (ERT) as listed on the EPA's ERT website (*https://www.epa.gov/electronic-reporting-air-emissions/electronic-reporting-tool-ert*) at the time of the test. Submit the results of the performance test to the EPA via the Compliance and Emissions Data Reporting Interface (CEDRI), which can be accessed through the EPA's Central Data Exchange (CDX) (*https://cdx.epa.gov/*). The data must be submitted in a file format generated through the use of the EPA's ERT. Alternatively, you may submit an electronic file consistent with the extensible markup language (XML) schema listed on the EPA's ERT website.

(2) Data collected using test methods that are not supported by the EPA's ERT as listed on the EPA's ERT website at the time of the test. The results of the performance test must be included as an attachment in the ERT or an alternate electronic file consistent with the XML schema listed on the EPA's ERT website. Submit the ERT generated package or alternative file to the EPA via CEDRI.

(3) Confidential business information (CBI). If you claim some of the information submitted under paragraph (a)(1) of this section is CBI, you must submit a complete file, including information claimed to be CBI, to the EPA. The file must be generated through the use of the EPA's ERT or an alternate electronic file consistent with the XML schema listed on the EPA's ERT website. Submit the file on a compact disc, flash drive, or other commonly used electronic storage medium and clearly mark the medium as CBI. Mail the electronic medium to U.S. EPA/OAQPS/CORE CBI Office, Attention: Group Leader, Measurement Policy Group, MD C404–02, 4930 Old Page Rd., Durham, NC 27703. The same file with the CBI omitted must be submitted to the EPA via the EPA's CDX as described in paragraph (a)(1) of this section.

(b) Within 60 days after the date of completing each continuous monitoring system (CMS) performance evaluation as defined in § 63.2, you must submit the results of the performance evaluation following the procedures specified in paragraphs (b)(1) through (3) of this section.

(1) Performance evaluations of CMS measuring relative accuracy test audit (RATA) pollutants that are supported by the EPA's ERT as listed on the EPA's ERT website at the time of the evaluation. Submit the results of the performance evaluation to the EPA via CEDRI, which can be accessed through the EPA's CDX. The data must be submitted in a file format generated through the use of the EPA's ERT. Alternatively, you may submit an electronic file consistent with the XML schema listed on the EPA's ERT website.

(2) Performance evaluations of CMS measuring RATA pollutants that are

sfrattini on LAPJZKW1R2 with $$_JOB
VerDate Sep<11>2014 09:16 Apr 04, 2023 Jkt 256165 PO 00000 Frm 01206 Fmt 8010 Sfmt 8010 Q:\40\256165.XXX PC31

not supported by the EPA's ERT as listed on the EPA's ERT website at the time of the evaluation. The results of the performance evaluation must be included as an attachment in the ERT or an alternate electronic file consistent with the XML schema listed on the EPA's ERT website. Submit the ERT generated package or alternative file to the EPA via CEDRI.

(3) Confidential business information. If you claim some of the information submitted under paragraph (a)(1) of this section is CBI, you must submit a complete file, including information claimed to be CBI, to the EPA. The file must be generated through the use of the EPA's ERT or an alternate electronic file consistent with the XML schema listed on the EPA's ERT website. Submit the file on a compact disc, flash drive, or other commonly used electronic storage medium and clearly mark the medium as CBI. Mail the electronic medium to U.S. EPA/OAQPS/CORE CBI Office, Attention: Group Leader, Measurement Policy Group, MD C404–02, 4930 Old Page Rd., Durham, NC 27703. The same file with the CBI omitted must be submitted to the EPA via the EPA's CDX as described in paragraph (a)(1) of this section.

(c) For sources that commence construction or reconstruction before or on May 17, 2019, you must submit to the Administrator semiannual compliance reports of the information required in § 63.5764(c) and (d) beginning on September 16, 2020. For sources that commence construction or reconstruction after May 17, 2019, you must submit to the Administrator semiannual compliance reports of the information required in § 63.5764(c) and (d) beginning on March 20, 2020, or upon startup, whichever is later.

(d) If you are required to submit reports following the procedure specified in this paragraph (d), beginning on September 16, 2020, you must submit all subsequent reports to the EPA via CEDRI, which can be accessed through the EPA's CDX (*https://cdx.epa.gov/*). You must use the appropriate electronic report template on the CEDRI website (*https://www.epa.gov/electronic-reporting-air-emissions/compliance-and-emissions-data-reporting-interface-cedri*) for this subpart. The report must be submitted by the deadline specified in this subpart, regardless of the method in which the report is submitted. If you claim some of the information required to be submitted via CEDRI is CBI, submit a complete report, including information claimed to be CBI, to the EPA. The report must be generated using the appropriate form on the CEDRI website or an alternate electronic file consistent with the XML schema listed on the CEDRI website. Submit the file on a compact disc, flash drive, or other commonly used electronic storage medium and clearly mark the medium as CBI. Mail the electronic medium to U.S. EPA/OAQPS/CORE CBI Office, Attention: Group Leader, Measurement Policy Group, MD C404–02, 4930 Old Page Rd., Durham, NC 27703. The same file with the CBI omitted must be submitted to the EPA via the EPA's CDX as described earlier in this paragraph (d).

(e) If you are required to electronically submit a report through CEDRI in the EPA's CDX, you may assert a claim of EPA system outage for failure to timely comply with the reporting requirement. To assert a claim of EPA system outage, you must meet the requirements outlined in paragraphs (e)(1) through (7) of this section.

(1) You must have been or will be precluded from accessing CEDRI and submitting a required report within the time prescribed due to an outage of either the EPA's CEDRI or CDX systems.

(2) The outage must have occurred within the period of time beginning 5 business days prior to the date that the submission is due.

(3) The outage may be planned or unplanned.

(4) You must submit notification to the Administrator in writing as soon as possible following the date you first knew, or through due diligence should have known, that the event may cause or has caused a delay in reporting.

(5) You must provide to the Administrator a written description identifying:

(i) The date(s) and time(s) when CDX or CEDRI was accessed and the system was unavailable;

sfrattini on LAPJZKW1R2 with $$_JOB
VerDate Sep<11>2014 09:16 Apr 04, 2023 Jkt 256165 PO 00000 Frm 01207 Fmt 8010 Sfmt 8010 Q:\40\256165.XXX PC31

(ii) A rationale for attributing the delay in reporting beyond the regulatory deadline to EPA system outage;

(iii) Measures taken or to be taken to minimize the delay in reporting; and

(iv) The date by which you propose to report, or if you have already met the reporting requirement at the time of the notification, the date you reported.

(6) The decision to accept the claim of EPA system outage and allow an extension to the reporting deadline is solely within the discretion of the Administrator.

(7) In any circumstance, the report must be submitted electronically as soon as possible after the outage is resolved.

(f) If you are required to electronically submit a report through CEDRI in the EPA's CDX, you may assert a claim of force majeure for failure to timely comply with the reporting requirement. To assert a claim of force majeure, you must meet the requirements outlined in paragraphs (f)(1) through (5) of this section.

(1) You may submit a claim if a force majeure event is about to occur, occurs, or has occurred or there are lingering effects from such an event within the period of time beginning five business days prior to the date the submission is due. For the purposes of this section, a force majeure event is defined as an event that will be or has been caused by circumstances beyond the control of the affected facility, its contractors, or any entity controlled by the affected facility that prevents you from complying with the requirement to submit a report electronically within the time period prescribed. Examples of such events are acts of nature (*e.g.,* hurricanes, earthquakes, or floods), acts of war or terrorism, or equipment failure or safety hazard beyond the control of the affected facility (*e.g.,* large scale power outages).

(2) You must submit notification to the Administrator in writing as soon as possible following the date you first knew, or through due diligence should have known, that the event may cause or has caused a delay in reporting.

(3) You must provide to the Administrator:

(i) A written description of the force majeure event;

(ii) A rationale for attributing the delay in reporting beyond the regulatory deadline to the force majeure event;

(iii) A description of measures taken or to be taken to minimize the delay in reporting; and

(iv) The date by which you propose to report, or if you have already met the reporting requirement at the time of the notification, the date you reported.

(4) The decision to accept the claim of force majeure and allow an extension to the reporting deadline is solely within the discretion of the Administrator.

(5) In any circumstance, the reporting must occur as soon as possible after the force majeure event occurs.

[85 FR 15971, Mar. 20, 2020]

§ 63.5767 What records must I keep?

You must keep the records specified in paragraphs (a) through (d) of this section in addition to records specified in individual sections of this subpart.

(a) You must keep a copy of each notification and report that you submitted to comply with this subpart.

(b) You must keep all documentation supporting any notification or report that you submitted.

(c) If your facility is not controlled by an add-on control device (i.e., you are complying with organic HAP content limits, application equipment requirements, or MACT model point value averaging provisions), you must keep the records specified in paragraphs (c)(1) through (3) of this section.

(1) The total amounts of open molding production resin, pigmented gel coat, clear gel coat, tooling resin, and tooling gel coat used per month and the weighted-average organic HAP contents for each operation, expressed as weight-percent. For open molding production resin and tooling resin, you must also record the amounts of each applied by atomized and nonatomized methods.

(2) The total amount of each aluminum coating used per month (including primers, top coats, clear coats, thinners, and activators) and the weighted-average organic HAP content as determined in § 63.5752.

(3) The total amount of each aluminum wipedown solvent used per

sfrattini on LAPJZKW1R2 with $$_JOB
VerDate Sep<11>2014 09:16 Apr 04, 2023 Jkt 256165 PO 00000 Frm 01208 Fmt 8010 Sfmt 8010 Q:\40\256165.XXX PC31

month and the weighted-average organic HAP content as determined in § 63.5749.

(d) If your facility has an add-on control device, you must keep the records of any failures to meet the applicable standards, including the date, time, and duration of the failure; a list of the affected add-on control device and actions taken to minimize emissions, an estimate of the quantity of each regulated pollutant emitted over any emission limit, and a description of the method used to estimate the emissions; control device performance tests; and continuous monitoring system performance evaluations.

[66 FR 44232, Aug. 22, 2001, as amended at 85 FR 15973, Mar. 20, 2020]

§ 63.5770 In what form and for how long must I keep my records?

(a) Your records must be readily available and in a form so they can be easily inspected and reviewed.

(b) You must keep each record for 5 years following the date that each record is generated.

(c) You must keep each record on site for at least 2 years after the date that each record is generated. You can keep the records offsite for the remaining 3 years.

(d) You can keep the records on paper or an alternative media, such as microfilm, computer, computer disks, magnetic tapes, or on microfiche.

(e) Any records required to be maintained by this part that are submitted electronically via the EPA's CEDRI may be maintained in electronic format. This ability to maintain electronic copies does not affect the requirement for facilities to make records, data, and reports available upon request to a delegated air agency or the EPA as part of an on-site compliance evaluation.

[66 FR 44232, Aug. 22, 2001, as amended at 85 FR 15973, Mar. 20, 2020]

OTHER INFORMATION YOU NEED TO KNOW

§ 63.5773 What parts of the General Provisions apply to me?

You must comply with the requirements of the General Provisions in 40 CFR part 63, subpart A, as specified in Table 8 to this subpart.

§ 63.5776 Who implements and enforces this subpart?

(a) If the Administrator has delegated authority to your State or local agency, the State or local agency has the authority to implement and enforce this subpart.

(b) In delegating implementation and enforcement authority of this subpart to a State or local agency under 40 CFR part 63, subpart E, the authorities that are retained by the Administrator of the U.S. EPA and are not transferred to the State or local agency are listed in paragraphs (b)(1) through (4) of this section.

(1) Under § 63.6(g), the authority to approve alternatives to the standards listed in paragraphs (b)(1)(i) through (vii) of this section is not delegated.

(i) § 63.5698—Emission limit for open molding resin and gel coat operations.

(ii) § 63.5728—Standards for closed molding resin operations.

(iii) § 63.5731(a)—Standards for resin and gel coat mixing operations.

(iv) § 63.5734—Standards for resin and gel coat application equipment cleaning operations.

(v) § 63.5740(a)—Emission limit for carpet and fabric adhesive operations.

(vi) § 63.5743—Standards for aluminum recreational boat surface coating operations.

(vii) § 63.5746(g)—Approval of alternative means of demonstrating compliance with the emission limits for aluminum recreational boat surface coating operations.

(2) Under § 63.7(e)(2)(ii) and (f), the authority to approve alternatives to the test methods listed in paragraphs (b)(2)(i) through (iv) of this section is not delegated.

(i) § 63.5719(b)—Method for determining whether an enclosure is a total enclosure.

(ii) § 63.5719(c)—Methods for measuring emissions from a control device.

(iii) § 63.5725(d)(1)—Performance specifications for thermal oxidizer combustion temperature monitors.

(iv) § 63.5758—Method for determining hazardous air pollutant content of regulated materials.

(3) Under § 63.8(f), the authority to approve major alternatives to the monitoring requirements listed in § 63.5725

sfrattini on LAPJZKW1R2 with $$_JOB
VerDate Sep<11>2014 09:16 Apr 04, 2023 Jkt 256165 PO 00000 Frm 01209 Fmt 8010 Sfmt 8010 Q:\40\256165.XXX PC31

is not delegated. A ''major alternative'' is defined in § 63.90.

(4) Under § 63.10(f), the authority to approve major alternatives to the reporting and recordkeeping requirements listed in §§ 63.5764, 63.5767, and 63.5770 is not delegated. A ''major alternative'' is defined in § 63.90.

DEFINITIONS

§ 63.5779 What definitions apply to this subpart?

Terms used in this subpart are defined in the Clean Air Act, in § 63.2, and in this section as follows:

Add-on control means an air pollution control device, such as a thermal oxidizer, that reduces pollution in an air stream by destruction or removal before discharge to the atmosphere.

Administrator means the Administrator of the United States Environmental Protection Agency (U.S. EPA) or an authorized representative (for example, a State delegated the authority to carry out the provisions of this subpart).

Aluminum recreational boat means any marine or freshwater recreational boat that has a hull or deck constructed primarily of aluminum. A recreational boat is a vessel which by design and construction is intended by the manufacturer to be operated primarily for pleasure, or to be leased, rented or chartered to another for the latter's pleasure (rather than for commercial or military purposes); and whose major structural components are fabricated and assembled in an indoor, production-line manufacturing plant or similar land-side operation and not in a dry dock, graving dock, or marine railway on the navigable waters of the United States.

Aluminum recreational boat surface coating operation means the application of primers or top coats to aluminum recreational boats. It also includes the application of clear coats over top coats. Aluminum recreational boat surface coating operations do not include the application of wood coatings or antifoulant coatings to aluminum recreational boats.

Aluminum coating spray gun cleaning means the process of flushing or removing paints or coatings from the interior or exterior of a spray gun used to apply aluminum primers, clear coats, or top coats to aluminum recreational boats.

Aluminum wipedown solvents means solvents used to remove oil, grease, welding smoke, or other contaminants from the aluminum surfaces of a boat before priming or painting. Aluminum wipedown solvents contain no coating solids; aluminum surface preparation materials that contain coating solids are considered coatings for the purpose of this subpart and are not wipedown solvents.

Antifoulant coating means any coating that is applied to the underwater portion of a boat specifically to prevent or reduce the attachment of biological organisms and that is registered with EPA as a pesticide under the Federal Insecticide, Fungicide, and Rodenticide Act (7 U.S.C. section 136, *et seq.*). For the purpose of this subpart, primers used with antifoulant coatings to prepare the surface to accept the antifoulant coating are considered antifoulant coatings.

Assembly adhesive means any chemical material used in the joining of one fiberglass, metal, foam, or wood parts to another to form a temporary or permanently bonded assembly. Assembly adhesives include, but are not limited to, methacrylate adhesives and putties made from polyester or vinylester resin mixed with inert fillers or fibers.

Atomized resin application means a resin application technology in which the resin leaves the application equipment and breaks into droplets or an aerosol as it travels from the application equipment to the surface of the part. Atomized resin application includes, but is not limited to, resin spray guns and resin chopper spray guns.

Boat means any type of vessel, other than a seaplane, that can be used for transportation on the water.

Boat manufacturing facility means a facility that manufactures the hulls or decks of boats from fiberglass or aluminum or assembles boats from premanufactured hulls and decks, or builds molds to make fiberglass hulls or decks. A facility that manufactures only parts of boats (such as hatches, seats, or lockers) or boat trailers, but

sfrattini on LAPJZKW1R2 with $$_JOB
VerDate Sep<11>2014 09:16 Apr 04, 2023 Jkt 256165 PO 00000 Frm 01210 Fmt 8010 Sfmt 8010 Q:\40\256165.XXX PC31

no boat hulls or decks or molds for fiberglass boat hulls or decks, is not considered a boat manufacturing facility for the purpose of this subpart.

Carpet and fabric adhesive means any chemical material that permanently attaches carpet, fabric, or upholstery to any surface of a boat.

Clear gel coat means gel coats that are clear or translucent so that underlying colors are visible. Clear gel coats are used to manufacture parts for sale. Clear gel coats do not include tooling gel coats used to build or repair molds.

Closed molding means any molding process in which pressure is used to distribute the resin through the reinforcing fabric placed between two mold surfaces to either saturate the fabric or fill the mold cavity. The pressure may be clamping pressure, fluid pressure, atmospheric pressure, or vacuum pressure used either alone or in combination. The mold surfaces may be rigid or flexible. Closed molding includes, but is not limited to, compression molding with sheet molding compound, infusion molding, resin injection molding (RIM), vacuum-assisted resin transfer molding (VARTM), resin transfer molding (RTM), and vacuum-assisted compression molding. Processes in which a closed mold is used only to compact saturated fabric or remove air or excess resin from the fabric (such as in vacuum bagging), are not considered closed molding. Open molding steps, such as application of a gel coat or skin coat layer by conventional open molding prior to a closed molding process, are not closed molding.

Cured resin and gel coat means resin or gel coat that has been polymerized and changed from a liquid to a solid.

Deviation after September 16, 2020, means any instance in which an affected source subject to this subpart, or an owner or operator of such a source:

(1) Fails to meet any requirement or obligation established by this subpart, including, but not limited to, any emission limit, operating limit, or work practice standard; or

(2) Fails to meet any term or condition that is adopted to implement an applicable requirement in this subpart and that is included in the operating permit for any affected source required to obtain such a permit.

Deviation before September 17, 2020 means any instance in which an affected source subject to this subpart, or an owner or operator of such a source:

(1) Fails to meet any requirement or obligation established by this subpart, including, but not limited to, any emission limit, operating limit, or work practice standard; or

(2) Fails to meet any term or condition that is adopted to implement an applicable requirement in this subpart and that is included in the operating permit for any affected source required to obtain such a permit; or

(3) Fails to meet any emission limit, or operating limit, or work practice standard in this subpart during startup, shutdown, or malfunction, regardless of whether or not such failure is permitted by this subpart.

Enclosure means a structure, such as a spray booth, that surrounds a source of emissions and captures and directs the emissions to an add-on control device.

Fiberglass boat means a vessel in which either the hull or deck is built from a composite material consisting of a thermosetting resin matrix reinforced with fibers of glass, carbon, aramid, or other material.

Fiberglass hull and deck coatings means coatings applied to the exterior or interior surface of fiberglass boat hulls and decks on the completed boat. Polyester and vinylester resins and gel coats used in building fiberglass parts are not fiberglass hull and deck coatings for the purpose of this subpart.

Filled resin means a resin to which an inert material has been added to change viscosity, density, shrinkage, or other physical properties.

Gel coat means a thermosetting resin surface coating containing styrene (Chemical Abstract Service or CAS No. 100–42–5) or methyl methacrylate (CAS No. 80–62–6), either pigmented or clear, that provides a cosmetic enhancement or improves resistance to degradation from exposure to the elements. Gel coat layers do not contain any reinforcing fibers and gel coats are applied directly to mold surfaces or to a finished laminate.

sfrattini on LAPJZKW1R2 with $$_JOB
VerDate Sep<11>2014 09:16 Apr 04, 2023 Jkt 256165 PO 00000 Frm 01211 Fmt 8010 Sfmt 8010 Q:\40\256165.XXX PC31

Hazardous air pollutant or HAP means any air pollutant listed in, or pursuant to section 112(b) of the Clean Air Act.

Hazardous air pollutant content or HAP content means the amount of HAP contained in a regulated material at the time it is applied to the part being manufactured. If no HAP is added to a material as a thinner or diluent, then the HAP content is the same as the HAP content of the material as purchased from the supplier. For resin and gel coat, HAP content does not include any HAP contained in the catalyst added to the resin or gel coat during application to initiate curing.

Hazardous air pollutant data sheet (HDS) means documentation furnished by a material supplier or an outside laboratory to provide the organic HAP content of the material by weight, measured using an EPA Method, manufacturer's formulation data, or an equivalent method. For aluminum coatings, the HDS also documents the solids content by volume, determined from the manufacturer's formulation data. The purpose of the HDS is to help the affected source in showing compliance with the organic HAP content limits contained in this subpart. The HDS must state the maximum total organic HAP concentration, by weight, of the material. It must include any organic HAP concentrations equal to or greater than 0.1 percent by weight for individual organic HAP that are carcinogens, as defined by the Occupational Safety and Health Administration Hazard Communication Standard (29 CFR part 1910), and 1.0 percent by weight for all other individual organic HAP, as formulated. The HDS must also include test conditions if EPA Method 311 is used for determining organic HAP content.

Maximum achievable control technology (MACT) model point value means a number calculated for open molding operations that is a surrogate for emissions and is used to determine if your open molding operations are in compliance with the provisions of this subpart. The units for MACT model point values are kilograms of organic HAP per megagram of resin or gel coat applied.

Manufacturer's certification means documentation furnished by a material supplier that shows the organic HAP content of a material and includes a HDS.

Mold means the cavity or surface into or on which gel coat, resin, and fibers are placed and from which finished fiberglass parts take their form.

Mold sealing and release agents means materials applied to a mold to seal, polish, and lubricate the mold to prevent parts from sticking to the mold. Mold sealers, waxes, and glazing and buffing compounds are considered mold sealing and release agents for the purposes of this subpart.

Mold stripping and cleaning solvents means materials used to remove mold sealing and release agents from a mold before the mold surface is repaired, polished, or lubricated during normal mold maintenance.

Month means a calendar month.

Neat resin means a resin to which no filler has been added.

Nonatomized resin application means any application technology in which the resin is not broken into droplets or an aerosol as it travels from the application equipment to the surface of the part. Nonatomized resin application technology includes, but is not limited to, flowcoaters, chopper flowcoaters, pressure fed resin rollers, resin impregnators, and hand application (for example, paint brush or paint roller).

Open molding resin and gel coat operation means any process in which the reinforcing fibers and resin are placed in the mold and are open to the surrounding air while the reinforcing fibers are saturated with resin. For the purposes of this subpart, open molding includes operations in which a vacuum bag or similar cover is used to compress an uncured laminate to remove air bubbles or excess resin, or to achieve a bond between a core material and a laminate.

Pigmented gel coat means opaque gel coats used to manufacture parts for sale. Pigmented gel coats do not include tooling gel coats used to build or repair molds.

Production resin means any resin used to manufacture parts for sale. Production resins do not include tooling resins used to build or repair molds, or assembly adhesives as defined in this section.

sfrattini on LAPJZKW1R2 with $$_JOB
VerDate Sep<11>2014 09:16 Apr 04, 2023 Jkt 256165 PO 00000 Frm 01212 Fmt 8010 Sfmt 8010 Q:\40\256165.XXX PC31

Recycled resin and gel coat application equipment cleaning solvent means cleaning solvents recycled on-site or returned to the supplier or another party to remove resin or gel coat residues so that the solvent can be reused.

Research and development activities means:

(1) Activities conducted at a laboratory to analyze air, soil, water, waste, or product samples for contaminants, environmental impact, or quality control;

(2) Activities conducted to test more efficient production processes or methods for preventing or reducing adverse environmental impacts, provided that the activities do not include the production of an intermediate or final product for sale or exchange for commercial profit, except in a *de minimis* manner; and

(3) Activities conducted at a research or laboratory facility that is operated under the close supervision of technically trained personnel, the primary purpose of which is to conduct research and development into new processes and products and that is not engaged in the manufacture of products for sale or exchange for commercial profit, except in a *de minimis* manner.

Resin means any thermosetting resin with or without pigment containing styrene (CAS No. 100–42–5) or methyl methacrylate (CAS No. 80–62–6) and used to encapsulate and bind together reinforcement fibers in the construction of fiberglass parts.

Resin and gel coat application equipment cleaning means the process of flushing or removing resins and gel coats from the interior or exterior of equipment that is used to apply resin or gel coat in the manufacture of fiberglass parts.

Resin and gel coat mixing operation means any operation in which resin or gel coat, including the mixing of putties or polyputties, is combined with additives that include, but are not limited to, fillers, promoters, or catalysts.

Roll-out means the process of using rollers, squeegees, or similar tools to compact reinforcing materials saturated with resin to remove trapped air or excess resin.

Shutdown after September 16, 2020, means the cessation of operation of the add-on control devices.

Skin coat is a layer of resin and fibers applied over the gel coat to protect the gel coat from being deformed by the next laminate layers.

Startup after September 17, 2020, means the setting in operation of the add-on control devices.

Tooling resin means the resin used to build or repair molds (also known as tools) or prototypes (also known as plugs) from which molds will be made.

Tooling gel coat means the gel coat used to build or repair molds (also known as tools) or prototypes (also known as plugs) from which molds will be made.

Vacuum bagging means any molding technique in which the reinforcing fabric is saturated with resin and then covered with a flexible sheet that is sealed to the edge of the mold and where a vacuum is applied under the sheet to compress the laminate, remove excess resin, or remove trapped air from the laminate during curing. Vacuum bagging does not include processes that meet the definition of closed molding.

Vinylester resin means a thermosetting resin containing esters of acrylic or methacrylic acids and having double-bond and ester linkage sites only at the ends of the resin molecules.

Volume fraction of coating solids means the ratio of the volume of coating solids (also known as volume of nonvolatiles) to the volume of coating; liters of coating solids per liter of coating.

Wood coatings means coatings applied to wooden parts and surfaces of boats, such as paneling, cabinets, railings, and trim. Wood coatings include, but are not limited to, primers, stains, sealers, varnishes, and enamels. Polyester and vinylester resins or gel coats applied to wooden parts to encapsulate them or bond them to other parts are not wood coatings.

[66 FR 44232, Aug. 22, 2001, as amended at 85 FR 15973, Mar. 20, 2020]

sfrattini on LAPJZKW1R2 with $$_JOB
VerDate Sep<11>2014 09:16 Apr 04, 2023 Jkt 256165 PO 00000 Frm 01213 Fmt 8010 Sfmt 8010 Q:\40\256165.XXX PC31

TABLE 1 TO SUBPART VVVV OF PART 63—COMPLIANCE DATES FOR NEW AND EXISTING BOAT MANUFACTURING FACILITIES

As specified in § 63.5695, you must comply by the dates in the following table:

If your facility is—	And—	Then you must comply by this date—
1. An existing source	Is a major source on or before August 22, 2001[1].	August 23, 2004.
2. An existing or new area source	Becomes a major source after August 22, 2001[1].	1 year after becoming a major source or August 22, 2002, whichever is later.
3. A new source	Is a major source at startup[1]	Upon startup or August 22, 2001, whichever is later.

[1]Your facility is a major source if it is a stationary source or group of stationary sources located within a contiguous area and under common control that emits or can potentially emit, considering controls, in the aggregate, 9.1 megagrams or more per year of a single hazardous air pollutant or 22.7 megagrams or more per year of a combination of hazardous air pollutants.

TABLE 2 TO SUBPART VVVV OF PART 63—ALTERNATIVE ORGANIC HAP CONTENT REQUIREMENTS FOR OPEN MOLDING RESIN AND GEL COAT OPERATIONS

As specified in §§ 63.5701(b), 63.5704(b)(2), and 63.5713(a), (b), and (d), you must comply with the requirements in the following table:

For this operation—	And this application method—	You must not exceed this weighted-average organic HAP content (weight percent) requirement—
1. Production resin operations	Atomized (spray)	28 percent.
2. Production resin operations	Nonatomized (nonspray)	35 percent.
3. Pigmented gel coat operations	Any method	33 percent.
4. Clear gel coat operations	Any method	48 percent
5. Tooling resin operations	Atomized (spray)	30 percent.
6. Tooling resin operations	Nonatomized (nonspray)	39 percent.
7. Tooling gel coat operations	Any method	40 percent.

TABLE 3 TO SUBPART VVVV OF PART 63—MACT MODEL POINT VALUE FORMULAS FOR OPEN MOLDING OPERATIONS[1]

As specified in §§ 63.5710(d) and 63.5714(a), you must calculate point values using the formulas in the following table:

For this operation—	And this application method—	Use this formula to calculate the MACT model plant value for each resin and gel coat—
1. Production resin, tooling resin	a. Atomized	$0.014 \times (\text{Resin HAP\%})^{2.425}$
	b. Atomized, plus vacuum bagging with roll-out.	$0.01185 \times (\text{Resin HAP\%})^{2.425}$
	c. Atomized, plus vacuum bagging without roll-out.	$0.00945 \times (\text{Resin HAP\%})^{2.425}$
	d. Nonatomized	$0.014 \times (\text{Resin HAP\%})^{2.275}$
	e. Nonatomized, plus vaccum bagging with roll-out.	$0.0110 \times (\text{Resin HAP\%})^{2.275}$
	f. Nonatomized, plus vacuum bagging without roll-out.	$0.0076 \times (\text{Resin HAP\%})^{2.275}$
2. Pigmented gel coat, clear gel coat, tooling gel coat.	All methods	$0.445 \times (\text{Gel coat HAP\%})^{1.675}$

[1]Equations calculate MACT model point value in kilograms of organic HAP per megagrams of resin or gel coat applied. The equations for vacuum bagging with roll-out are applicable when a facility rolls out the applied resin and fabric prior to applying the vacuum bagging materials. The equations for vacuum bagging without roll-out are applicable when a facility applies the vacuum bagging materials immediately after resin application without rolling out the resin and fabric. HAP% = organic HAP content as supplied, expressed as a weight-percent value between 0 and 100 percent.

[66 FR 44232, Aug. 22, 2001; 66 FR 50504, Oct. 3, 2001]

TABLE 4 TO SUBPART VVVV OF PART 63—OPERATING LIMITS IF USING AN ADD-ON CONTROL DEVICE FOR OPEN MOLDING OPERATIONS

As specified in §§ 63.5715(a) and 63.5725(f)(5), you must meet the operating limits in the following table:

sfrattini on LAPJZKW1R2 with $$_JOB
VerDate Sep<11>2014 09:16 Apr 04, 2023 Jkt 256165 PO 00000 Frm 01214 Fmt 8010 Sfmt 8026 Q:\40\256165.XXX PC31

For the following device—	You must meet the following operating limit—	And you must demonstrate continuous compliance with the operating limit by—
1. Thermal oxidizer	The average combustion temperature in any 3-hour period must not fall below the combustion temperature limit established according to § 63.5725(d).	a. Collecting the combustion temperature data according to § 63.5725(d); b. reducing the data to 3-hour block averages; and c. maintaining the 3-hour average combustion temperature at or above the temperature limit.
2. Other control devices	An operating limit approved by the Administrator according to § 63.8(f).	a. Collecting parameter monitoring as approved by the Administrator according to § 63.8(f); and b. maintaining the parameters within the operating limits approved according to § 63.8(f).
3. Emission capture system that is a PTE according to § 63.5719(b).	a. The direction of the air flow at all times must be into the enclosure; and b. in any 3-hour period, either the average facial velocity of air through all natural draft openings in the enclosure must be at least 200 feet per minute; or c. the pressure drop across the enclosure must be at least 0.007 inch H_2O, as established in Method 204 of appendix M to 40 CFR part 51.	i. Collecting the direction of air flow, and either the facial velocity of air through all natural draft openings according to § 63.5725(f)(3) or the pressure drop across the enclosure according to § 63.5725(f)(4); and ii. reducing the data for facial velocity or pressure drop to 3-hour block averages; and iii. maintaining the 3-hour average facial velocity of air flow through all natural draft openings or the pressure drop at or above the facial velocity limit or pressure drop limit, and maintaining the direction of air flow into the enclosure at all times.
4. Emission capture system that is not a PTE according to § 63.5719(b).	a. The average gas volumetric flow rate or duct static pressure in each duct between a capture device and add-on control device inlet in any 3-hour period must not fall below the average volumetric flow rate or duct static pressure limit established for that capture device according to § 63.5725(f)(5); and b. the average pressure drop across an opening in each enclosure in any 3-hour period must not fall below the average pressure drop limit established for that capture device according to § 63.5725(f)(5).	i. Collecting the gas volumetric flow rate or duct static pressure for each capture device according to § 63.5725(f)(1) and (3); ii. reducing the data to 3-hour block averages; iii. maintaining the 3-hour average gas volumetric flow rate or duct static pressure for each capture device at or above the gas volumetric flow rate or duct static pressure limit; iv. collecting data for the pressure drop across an opening in each enclosure according to § 63.5725(f)(2) and (4); v. reducing the data to 3-hour block averages; and vi. maintaining the 3-hour average pressure drop across the opening for each enclosure at or above the gas volumetric flow rate or duct static pressure limit.

Table 5 to Subpart VVVV of Part 63—Default Organic HAP Contents of Solvents and Solvent Blends

As specified in § 63.5758(a)(6), when detailed organic HAP content data for solvent blends are not available, you may use the values in the following table:

Solvent/solvent blend	CAS No.	Average organic HAP content, percent by mass	Typical organic HAP, percent by mass
1. Toluene	108–88–3	100	Toluene.
2. Xylene(s)	1330–20–7	100	Xylenes, ethylbenzene.
3. Hexane	110–54–3	50	n-hexane.
4. n-hexane	110–54–3	100	n-hexane.
5. Ethylbenzene	100–41–4	100	Ethylbenzene.
6. Aliphatic 140		0	None.
7. Aromatic 100		2	1% xylene, 1% cumene.
8. Aromatic 150		9	Naphthalene.
9. Aromatic naptha	64742–95–6	2	1% xylene, 1% cumene.
10. Aromatic solvent	64742–94–5	10	Naphthalene.
11. Exempt mineral spirits	8032–32–4	0	None.
12. Ligroines (VM & P)	8032–32–4	0	None.
13. Lactol spirits	64742–89–6	15	Toluene.
14. Low aromatic white spirit	64742–82–1	0	None.
15. Mineral spirits	64742–88–7	1	Xylenes.
16. Hydrotreated naphtha	64742–48–9	0	None.
17. Hydrotreated light distillate	64742–47–8	0.1	Toluene.
18. Stoddard solvent	8052–41–3	1	Xylenes.
19. Super high-flash naphtha	64742–95–6	5	Xylenes.
20. Varol® solvent	8052–49–3	1	0.5% xylenes, 0.5% ethyl benzene.
21. VM & P naphtha	64742–89–8	6	3% toluene, 3% xylene.
22. Petroleum distillate mixture	68477–31–6	8	4% naphthalene, 4% biphenyl.

sfrattini on LAPJZKW1R2 with $$_JOB
VerDate Sep<11>2014 09:16 Apr 04, 2023 Jkt 256165 PO 00000 Frm 01215 Fmt 8010 Sfmt 8026 Q:\40\256165.XXX PC31

TABLE 6 TO SUBPART VVVV OF PART 63—DEFAULT ORGANIC HAP CONTENTS OF PETROLEUM SOLVENT GROUPS

As specified in §63.5758(a)(6), when detailed organic HAP content data for solvent blends are not available, you may use the values in the following table:

Solvent type	Average organic HAP content, percent by mass	Typical organic HAP, percent by mass
Aliphatic (Mineral Spirits 135, Mineral Spirits 150 EC, Naphtha, Mixed Hydrocarbon, Aliphatic Hydrocarbon, Aliphatic Naptha, Naphthol Spirits, Petroleum Spirits, Petroleum Oil, Petroleum Naphtha, Solvent Naphtha, Solvent Blend.).	3	1% Xylene, 1% Toluene, and 1% Ethylbenzene.
Aromatic (Medium-flash Naphtha, High-flash Naphtha, Aromatic Naphtha, Light Aromatic Naphtha, Light Aromatic Hydrocarbons, Aromatic Hydrocarbons, Light Aromatic Solvent.).	6	4% Xylene, 1% Toluene, and 1% Ethylbenzene.

TABLE 7 TO SUBPART VVVV OF PART 63—APPLICABILITY AND TIMING OF NOTIFICATIONS

As specified in §63.5761(a), you must submit notifications according to the following table:

If your facility—	You must submit—	By this date—
1. Is an existing source subject to this subpart.	An initial notification containing the information specified in §63.9(b)(2).	No later than the dates specified in §63.9(b)(2).
2. Is a new source subject to this subpart	The notifications specified in §63.9(b)(3) to (5).	No later than the dates specified §63.9(b)(4) and (5).
3. Qualifies for a compliance extension as specified in §63.9(c).	A request for a compliance extension as specified in §63.9(c).	No later than the dates specified in §63.6(i).
4. Is complying with organic HAP content limits, application equipment requirements; or MACT model point value averaging provisions.	A notification of compliance status as specified in §63.9(h).	No later than 30 calendar days after the end of the first 12-month averaging period after your facility's compliance date.
5. Is complying by using an add-on control device.	a. notification of intent to conduct a performance test as specified in §63.9(e).	No later than the date specified in §63.9(e).
	b. A notification of the date for the continuous monitoring system performance evaluation as specified in §63.9(g).	With the notification of intent to conduct a performance test.
	c. A notification of compliance status as specified in §63.9(h).	No later than 60 calendar days after the completion of the add-on control device performance test and continuous monitoring system performance evaluation.

TABLE 8 TO SUBPART VVVV OF PART 63—APPLICABILITY OF GENERAL PROVISIONS (40 CFR PART 63, SUBPART A) TO SUBPART VVVV

As specified in §63.5773, you must comply with the applicable requirements of the General Provisions according to the following table:

Citation	Requirement	Applies to subpart VVVV	Explanation
§63.1(a)	General Applicability	Yes.	
§63.1(b)	Initial Applicability Determination	Yes.	
§63.1(c)(1)	Applicability After Standard Established.	Yes.	
§63.1(c)(2)		Yes	Area sources are not regulated by subpart VVVV.
§63.1(c)(3)		No	[Reserved].
§63.1(c)(4)–(5)		Yes.	
§63.1(d)		No	[Reserved].
§63.1(e)	Applicability of Permit Program	Yes.	
§63.2	Definitions	Yes	Additional definitions are found in §63.5779.
§63.3	Units and Abbreviations	Yes.	
§63.4(a)	Prohibited Activities	Yes.	
§63.4(b)–(c)	Circumvention/Severability	Yes.	
§63.5(a)	Construction/Reconstruction	Yes.	

sfrattini on LAPJZKW1R2 with $$_JOB
VerDate Sep<11>2014 09:16 Apr 04, 2023 Jkt 256165 PO 00000 Frm 01216 Fmt 8010 Sfmt 8002 Q:\40\256165.XXX PC31

Citation	Requirement	Applies to subpart VVVV	Explanation
§ 63.5(b)	Requirements for Existing, Newly Constructed, and Reconstructed Sources.	Yes.	
§ 63.5(c)		No	[Reserved].
§ 63.5(d)	Application for Approval of Construction/Reconstruction.	Yes.	
§ 63.5(e)	Approval of Construction/Reconstruction.	Yes.	
§ 63.5(f)	Approval of Construction/Reconstruction Based on prior State Review.	Yes.	
§ 63.6(a)	Compliance with Standards and Maintenance Requirements—Applicability.	Yes.	
§ 63.6(b)	Compliance Dates for New and Reconstructed Sources.	Yes	§ 63.695 specifies compliance dates, including the compliance date for new area sources that become major sources after the effective date of the rule.
§ 63.6(c)	Compliance Dates for Existing Sources.	Yes	§ 63.5695 specifies compliance dates, including the compliance date for existing area sources that become major sources after the effective date of the rule.
§ 63.6(d)		No	[Reserved].
§ 63.6(e)(1)–(2)	Operation and Maintenance Requirements.	No	Operating requirements for open molding operations with add-on controls are specified in § 63.5725.
§ 63.6(e)(3)	Startup, Shut Down, and Malfunction Plans.	No	Only sources with add-on controls must complete startup, shutdown, and malfunction plans.
§ 63.6(f)(1)		No.	
§ 63.6(f)(2)–(3)	Compliance with Nonopacity Emission Standards.	Yes.	
§ 63.6(g)	Use of an Alternative Nonopacity Emission Standard.	Yes.	
§ 63.6(h)	Compliance with Opacity/Visible Emissions Standards.	No	Subpart VVVV does not specify opacity or visible emission standards.
§ 63.6(i)	Extension of Compliance with Emission Standards.	Yes.	
§ 63.6(j)	Exemption from Compliance with Emission Standards.	Yes.	
§ 63.7(a)(1)	Performance Test Requirements	Yes.	
§ 63.7(a)(2)	Dates for performance tests	No	§ 63.5716 specifies performance test dates.
§ 63.7(a)(3)	Performance testing at other times	Yes.	
§ 63.7(b)–(h)	Other performance testing requirements.	Yes.	
§ 63.8(a)(1)–(2)	Monitoring Requirements—Applicability.	Yes	All of § 63.8 applies only to sources with add-on controls. Additional monitoring requirements for sources with add-on controls are found in § 63.5725.
§ 63.8(a)(3)		No	[Reserved].
§ 63.8(a)(4)		No	Subpart VVVV does not refer directly or indirectly to § 63.11.
§ 63.8(b)(1)	Conduct of Monitoring	Yes.	
§ 63.8(b)(2)–(3)	Multiple Effluents and CMS	Yes	Applies to sources that use a CMS on the control device stack.
§ 63.8(c)(1)(i) and (iii)	CMS Operation and Maintenance	No	References to startup, shutdown, malfunction are not applicable.
§ 63.8(c)(1)–(4)	CMS Operation and Maintenance	Yes	Except those provisions in § 63.8(c)(1)(i) and (iii) as noted above.
§ 63.8(c)(5)	Continuous Opacity Monitoring Systems (COMS).	No	Subpart VVVV does not have opacity or visible emission standards.
§ 63.8(c)(6)–(8)	CMS Calibration Checks and Out-of-Control Periods.	Yes.	

sfrattini on LAPJZKW1R2 with $$_JOB
VerDate Sep<11>2014 09:16 Apr 04, 2023 Jkt 256165 PO 00000 Frm 01217 Fmt 8010 Sfmt 8002 Q:\40\256165.XXX PC31

Citation	Requirement	Applies to subpart VVVV	Explanation
§ 63.8(d)	Quality Control Program	Yes	Except those provisions of § 63.8(d)(3) regarding a startup, shutdown, malfunction plan as noted below.
§ 63.8(d)(3)	Quality Control Program	No	No requirement for a startup, shutdown, malfunction plan.
§ 63.8(e)	CMS Performance Evaluation	Yes.	
§ 63.8(f)(1)–(5)	Use of an Alternative Monitoring Method.	Yes.	
§ 63.8(f)(6)	Alternative to Relative Accuracy Test.	Yes	Applies only to sources that use continuous emission monitoring systems (CEMS).
§ 63.8(g)	Data Reduction	Yes.	
§ 63.9(a)	Notification Requirements—Applicability.	Yes.	
§ 63.9(b)	Initial Notifications	Yes.	
§ 63.9(c)	Request for Compliance Extension	Yes.	
§ 63.9(d)	Notification That a New Source Is Subject to Special Compliance Requirements.	Yes.	
§ 63.9(e)	Notification of Performance Test	Yes	Applies only to sources with add-on controls.
§ 63.9(f)	Notification of Visible Emissions/Opacity Test.	No	Subpart VVVV does not have opacity or visible emission standards.
§ 63.9(g)(1)	Additional CMS Notifications—Date of CMS Performance Evaluation.	Yes	Applies only to sources with add-on controls.
§ 63.9(g)(2)	Use of COMS Data	No	Subpart VVVV does not require the use of COMS.
§ 63.9(g)(3)	Alternative to Relative Accuracy Testing.	Yes	Applies only to sources with CEMS.
§ 63.9(h)	Notification of Compliance Status	Yes.	
§ 63.9(i)	Adjustment of Deadlines	Yes.	
§ 63.9(j)	Change in Previous Information	Yes.	
§ 63.10(a)	Recordkeeping/Reporting—Applicability.	Yes.	
§ 63.10(b)(1)	General Recordkeeping Requirements.	Yes	§§ 63.567 and 63.5770 specify additional recordkeeping requirements.
§ 63.10(b)(2)(i), (iii), (vi)–(xiv).	General Recordkeeping Requirements.	Yes.	
§ 63.10(b)(2)(ii), (iv), (v)	Recordkeeping Relevant to Startup, Shutdown, and Malfunction Periods.	No.	
§ 63.10(b)(3)	Recordkeeping Requirements for Applicability Determinations.	Yes	§ 63.5686 specifies applicability determinations for non-major sources.
§ 63.10(c)(1)–(14)	Additional Recordkeeping for Sources with CMS.	Yes	Applies only to sources with add-on controls.
§ 63.10(c)(15)	Additional Recordkeeping for Sources with CMS.	No	No requirement for a startup, shutdown, malfunction plan.
§ 63.10(d)(1)	General Reporting Requirements	Yes	§ 63.5764 specifies additional reporting requirements.
§ 63.10(d)(2)	Performance Test Results	Yes	§ 63.5764 specifies additional requirements for reporting performance test results.
§ 63.10(d)(3)	Opacity or Visible Emissions Observations.	No	Subpart VVVV does not specify opacity or visible emission standards.
§ 63.10(d)(4)	Progress Reports for Sources with Compliance Extensions.	Yes.	
§ 63.10(d)(5)	Startup, Shutdown, and Malfunction Reports.	No	Applies only to sources with add-on controls.
§ 63.10(e)(1)	Additional CMS Reports—General	Yes	Applies only to sources with add-on controls.
§ 63.10(e)(2)	Reporting Results of CMS Performance Evaluations.	Yes	Applies only to sources with add-on controls.
§ 63.10(e)(3)	Excess Emissions/CMS Performance Reports.	Yes	Applies only to sources with add-on controls.
§ 63.10(e)(4)	COMS Data Reports	No	Subpart VVVV does not specify opacity or visible emission standards.
§ 63.10(f)	Recordkeeping/Reporting Waiver	Yes.	

sfrattini on LAPJZKW1R2 with $$_JOB
VerDate Sep<11>2014 09:16 Apr 04, 2023 Jkt 256165 PO 00000 Frm 01218 Fmt 8010 Sfmt 8002 Q:\40\256165.XXX PC31

Citation	Requirement	Applies to subpart VVVV	Explanation
§63.11	Control Device Requirements—Applicability.	No	Facilities subject to subpart VVVV do not use flares as control devices.
§63.12	State Authority and Delegations	Yes	§63.5776 lists those sections of subpart A that are not delegated.
§63.13	Addresses	Yes.	
§63.14	Incorporation by Reference	Yes.	
§63.15	Availability of Information/Confidentiality.	Yes.	

[86 FR 66041, Nov. 19, 2021]

Subpart WWWW—National Emissions Standards for Hazardous Air Pollutants: Reinforced Plastic Composites Production

SOURCE: 68 FR 19402, Apr. 21, 2003, unless otherwise noted.

WHAT THIS SUBPART COVERS

§63.5780 What is the purpose of this subpart?

This subpart establishes national emissions standards for hazardous air pollutants (NESHAP) for reinforced plastic composites production. This subpart also establishes requirements to demonstrate initial and continuous compliance with the hazardous air pollutants (HAP) emissions standards.

§63.5785 Am I subject to this subpart?

(a) You are subject to this subpart if you own or operate a reinforced plastic composites production facility that is located at a major source of HAP emissions. Reinforced plastic composites production is limited to operations in which reinforced and/or nonreinforced plastic composites or plastic molding compounds are manufactured using thermoset resins and/or gel coats that contain styrene to produce plastic composites. The resins and gel coats may also contain materials designed to enhance the chemical, physical, and/or thermal properties of the product. Reinforced plastic composites production also includes cleaning, mixing, HAP-containing materials storage, and repair operations associated with the production of plastic composites.

(b) You are not subject to this subpart if your facility only repairs reinforced plastic composites. Repair includes the non-routine manufacture of individual components or parts intended to repair a larger item as defined in §63.5935

(c) You are not subject to this subpart if your facility is a research and development facility as defined in section 112(c)(7) of the Clean Air Act (CAA).

(d) You are not subject to this subpart if your reinforced plastic composites operations use less than 1.2 tons per year (tpy) of thermoset resins and gel coats that contain styrene combined.

§63.5787 What if I also manufacture fiberglass boats or boat parts?

(a) If your source meets the applicability criteria in §63.5785, and is not subject to the Boat Manufacturing NESHAP (40 CFR part 63, subpart VVVV), you are subject to this subpart regardless of the final use of the parts you manufacture.

(b) If your source is subject to 40 CFR part 63, subpart VVVV, and all the reinforced plastic composites you manufacture are used in manufacturing your boats, you are not subject to this subpart.

(c) If you are subject to 40 CFR part 63, subpart VVVV, and meet the applicability criteria in §63.5785, and produce reinforced plastic composites that are not used in fiberglass boat manufacture at your facility, all operations associated with the manufacture of the reinforced plastic composites parts that are not used in fiberglass boat manufacture at your facility are subject to this subpart, except as noted in paragraph (d) of this section.

(d) Facilities potentially subject to both this subpart and 40 CFR part 63, subpart VVVV may elect to have the

sfrattini on LAPJZKW1R2 with $$_JOB
VerDate Sep<11>2014 09:16 Apr 04, 2023 Jkt 256165 PO 00000 Frm 01219 Fmt 8010 Sfmt 8010 Q:\40\256165.XXX PC31

operations in paragraph (c) of this section covered by 40 CFR part 63, subpart VVVV, in lieu of this subpart, if they can demonstrate that this will not result in any organic HAP emissions increase compared to complying with this subpart.

§ 63.5790 What parts of my plant does this subpart cover?

(a) This subpart applies to each new or existing affected source at reinforced plastic composites production facilities.

(b) The affected source consists of all parts of your facility engaged in the following operations: Open molding, closed molding, centrifugal casting, continuous lamination, continuous casting, polymer casting, pultrusion, sheet molding compound (SMC) manufacturing, bulk molding compound (BMC) manufacturing, mixing, cleaning of equipment used in reinforced plastic composites manufacture, HAP-containing materials storage, and repair operations on parts you also manufacture.

(c) The following operations are specifically excluded from any requirements in this subpart: application of mold sealing and release agents; mold stripping and cleaning; repair of parts that you did not manufacture, including non-routine manufacturing of parts; personal activities that are not part of the manufacturing operations (such as hobby shops on military bases); prepreg materials as defined in § 63.5935; non-gel coat surface coatings; application of putties, polyputties, and adhesives; repair or production materials that do not contain resin or gel coat; research and development operations as defined in section 112(c)(7) of the CAA; polymer casting; and closed molding operations (except for compression/injection molding). Note that the exclusion of certain operations from any requirements applies only to operations specifically listed in this paragraph. The requirements for any co-located operations still apply.

(d) Production resins that must meet military specifications are allowed to meet the organic HAP limit contained in that specification. In order for this exemption to be used, you must supply to the permitting authority the specifications certified as accurate by the military procurement officer, and those specifications must state a requirement for a specific resin, or a specific resin HAP content. Production resins for which this exemption is used must be applied with nonatomizing resin application equipment unless you can demonstrate this is infeasible. You must keep a record of the resins for which you are using this exemption.

[68 FR 19402, Apr. 21, 2003, as amended at 70 FR 50124, Aug. 25, 2005]

§ 63.5795 How do I know if my reinforced plastic composites production facility is a new affected source or an existing affected source?

(a) A reinforced plastic composites production facility is a new affected source if it meets all the criteria in paragraphs (a)(1) and (2) of this section.

(1) You commence construction of the source after August 2, 2001.

(2) You commence construction, and no other reinforced plastic composites production source exists at that site.

(b) For the purposes of this subpart, an existing affected source is any affected source that is not a new affected source.

[70 FR 50124, Aug. 25, 2005]

CALCULATING ORGANIC HAP EMISSIONS FACTORS FOR OPEN MOLDING AND CENTRIFUGAL CASTING

§ 63.5796 What are the organic HAP emissions factor equations in Table 1 to this subpart, and how are they used in this subpart?

Emissions factors are used in this subpart to determine compliance with certain organic HAP emissions limits in Tables 3 and 5 to this subpart. You may use the equations in Table 1 to this subpart to calculate your emissions factors. Equations are available for each open molding operation and centrifugal casting operation and have units of pounds of organic HAP emitted per ton (lb/ton) of resin or gel coat applied. These equations are intended to provide a method for you to demonstrate compliance without the need to conduct for a HAP emissions test. In lieu of these equations, you can elect

sfrattini on LAPJZKW1R2 with $$_JOB
VerDate Sep<11>2014 09:16 Apr 04, 2023 Jkt 256165 PO 00000 Frm 01220 Fmt 8010 Sfmt 8010 Q:\40\256165.XXX PC31

to use site-specific organic HAP emissions factors to demonstrate compliance provided your site-specific organic HAP emissions factors are incorporated in the facility's air emissions permit and are based on actual facility HAP emissions test data. You may also use the organic HAP emissions factors calculated using the equations in Table 1 to this subpart, combined with resin and gel coat use data, to calculate your organic HAP emissions.

§ 63.5797 How do I determine the organic HAP content of my resins and gel coats?

In order to determine the organic HAP content of resins and gel coats, you may rely on information provided by the material manufacturer, such as manufacturer's formulation data and material safety data sheets (MSDS), using the procedures specified in paragraphs (a) through (c) of this section, as applicable.

(a) Include in the organic HAP total each organic HAP that is present at 0.1 percent by mass or more for Occupational Safety and Health Administration-defined carcinogens, as specified in 29 CFR 1910.1200(d)(4) and at 1.0 percent by mass or more for other organic HAP compounds.

(b) If the organic HAP content is provided by the material supplier or manufacturer as a range, you must use the upper limit of the range for determining compliance. If a separate measurement of the total organic HAP content, such as an analysis of the material by EPA Method 311 of appendix A to 40 CFR part 63, exceeds the upper limit of the range of the total organic HAP content provided by the material supplier or manufacturer, then you must use the measured organic HAP content to determine compliance.

(c) If the organic HAP content is provided as a single value, you may use that value to determine compliance. If a separate measurement of the total organic HAP content is made and is less than 2 percentage points higher than the value for total organic HAP content provided by the material supplier or manufacturer, then you still may use the provided value to demonstrate compliance. If the measured total organic HAP content exceeds the provided value by 2 percentage points or more, then you must use the measured organic HAP content to determine compliance.

§ 63.5798 What if I want to use, or I manufacture, an application technology (new or existing) whose organic HAP emissions characteristics are not represented by the equations in Table 1 to this subpart?

If you wish to use a resin or gel coat application technology (new or existing), whose emission characteristics are not represented by the equations in Table 1 to this subpart, you may use the procedures in paragraphs (a) or (b) of this section to establish an organic HAP emissions factor. This organic HAP emissions factor may then be used to determine compliance with the emission limits in this subpart, and to calculate facility organic HAP emissions.

(a) Perform an organic HAP emissions test to determine a site-specific organic HAP emissions factor using the test procedures in § 63.5850.

(b) Submit a petition to the Administrator for administrative review of this subpart. This petition must contain a description of the resin or gel coat application technology and supporting organic HAP emissions test data obtained using EPA test methods or their equivalent. The emission test data should be obtained using a range of resin or gel coat HAP contents to demonstrate the effectiveness of the technology under the different conditions, and to demonstrate that the technology will be effective at different sites. We will review the submitted data, and, if appropriate, update the equations in Table 1 to this subpart.

§ 63.5799 How do I calculate my facility's organic HAP emissions on a tpy basis for purposes of determining which paragraphs of § 63.5805 apply?

To calculate your facility's organic HAP emissions in tpy for purposes of determining which paragraphs in § 63.5805 apply to you, you must use the procedures in either paragraph (a) of this section for new facilities prior to startup, or paragraph (b) of this section for existing facilities and new facilities

sfrattini on LAPJZKW1R2 with $$_JOB
VerDate Sep<11>2014 09:16 Apr 04, 2023 Jkt 256165 PO 00000 Frm 01221 Fmt 8010 Sfmt 8010 Q:\40\256165.XXX PC31

after startup. You are not required to calculate or report emissions under this section if you are an existing facility that does not have centrifugal casting or continuous lamination/casting operations, or a new facility that does not have any of the following operations: Open molding, centrifugal casting, continuous lamination/casting, pultrusion, SMC and BMC manufacturing, and mixing. Emissions calculation and emission reporting procedures in other sections of this subpart still apply. Calculate organic HAP emissions prior to any add-on control device, and do not include organic HAP emissions from any resin or gel coat used in operations subject to the Boat Manufacturing NESHAP, 40 CFR part 63, subpart VVVV, or from the manufacture of large parts as defined in § 63.5805(d)(2). For centrifugal casting operations at existing facilities, do not include any organic HAP emissions where resin or gel coat is applied to an open centrifugal mold using open molding application techniques. Table 1 and the Table 1 footnotes to this subpart present more information on calculating centrifugal casting organic HAP emissions. The timing and reporting of these calculations is discussed in paragraph (c) of this section.

(a) For new facilities prior to startup, calculate a weighted average organic HAP emissions factor for the operations specified in § 63.5805(c) and (d) on a lbs/ton of resin and gel coat basis. Base the weighted average on your projected operation for the 12 months subsequent to facility startup. Multiply the weighted average organic HAP emissions factor by projected resin use over the same period. You may calculate your organic HAP emissions factor based on the factors in Table 1 to this subpart, or you may use any HAP emissions factor approved by us, such as factors from the ''Compilation of Air Pollutant Emissions Factors, Volume I: Stationary Point and Area Sources (AP–42),'' or organic HAP emissions test data from similar facilities.

(b) For existing facilities and new facilities after startup, you may use the procedures in either paragraph (b)(1) or (2) of this section. If the emission factors for an existing facility have changed over the period of time prior to their initial compliance date due to incorporation of pollution-prevention control techniques, existing facilities may base the average emission factor on their operations as they exist on the compliance date. If an existing facility has accepted an enforceable permit limit that would result in less than 100 tpy of HAP measured prior to any add-on controls, and can demonstrate that they will operate at that level subsequent to the compliance date, they can be deemed to be below the 100 tpy threshold.

(1) *Use a calculated emission factor.* Calculate a weighted average organic HAP emissions factor on a lbs/ton of resin and gel coat basis. Base the weighted average on the prior 12 months of operation. Multiply the weighted average organic HAP emissions factor by resin and gel coat use over the same period. You may calculate this organic HAP emissions factor based on the equations in Table 1 to this subpart, or you may use any organic HAP emissions factor approved by us, such as factors from AP–42, or site-specific organic HAP emissions factors if they are supported by HAP emissions test data.

(2) *Conduct performance testing.* Conduct performance testing using the test procedures in § 63.5850 to determine a site-specific organic HAP emissions factor in units of lbs/ton of resin and gel coat used. Conduct the test under conditions expected to result in the highest possible organic HAP emissions. Multiply this factor by annual resin and gel coat use to determine annual organic HAP emissions. This calculation must be repeated and reported annually.

(c) Existing facilities must initially perform this calculation based on their 12 months of operation prior to April 21, 2003, and include this information with their initial notification report. Existing facilities must repeat the calculation based on their resin and gel coat use in the 12 months prior to their initial compliance date, and submit this information with their initial compliance report. After their initial compliance date, existing and new facilities must recalculate organic HAP emissions over the 12-month period

sfrattini on LAPJZKW1R2 with $$_JOB
VerDate Sep<11>2014 09:16 Apr 04, 2023 Jkt 256165 PO 00000 Frm 01222 Fmt 8010 Sfmt 8010 Q:\40\256165.XXX PC31

ending June 30 or December 31, whichever date is the first date following their compliance date specified in § 63.5800. Subsequent calculations should cover the periods in the semiannual compliance reports.

[68 FR 19402, Apr. 21, 2003, as amended at 70 FR 50124, Aug. 25, 2005]

COMPLIANCE DATES AND STANDARDS

§ 63.5800 When do I have to comply with this subpart?

You must comply with the standards in this subpart by the dates specified in Table 2 to this subpart. Facilities meeting an organic HAP emissions standard based on a 12-month rolling average must begin collecting data on the compliance date in order to demonstrate compliance.

§ 63.5805 What standards must I meet to comply with this subpart?

You must meet the requirements of paragraphs (a) through (h) of this section that apply to you. You may elect to comply using any options to meet the standards described in §§ 63.5810 through 63.5830. Use the procedures in § 63.5799 to determine if you meet or exceed the 100 tpy threshold.

(a) If you have an existing facility that has any centrifugal casting or continuous casting/lamination operations, you must meet the requirements of paragraph (a)(1) or (2) of this section:

(1) If the combination of all centrifugal casting and continuous lamination/casting operations emit 100 tpy or more of HAP, you must reduce the total organic HAP emissions from centrifugal casting and continuous lamination/casting operations by at least 95 percent by weight. As an alternative to meeting the 95 percent by weight requirement, centrifugal casting operations may meet the applicable organic HAP emissions limits in Table 5 to this subpart and continuous lamination/casting operations may meet an organic HAP emissions limit of 1.47 lbs/ton of neat resin plus and neat gel coat plus applied. For centrifugal casting, the percent reduction requirement does not apply to organic HAP emissions that occur during resin application onto an open centrifugal casting mold using open molding application techniques.

(2) If the combination of all centrifugal casting and continuous lamination/casting operations emit less than 100 tpy of HAP, then centrifugal casting and continuous lamination/casting operations must meet the appropriate requirements in Table 3 to this subpart.

(b) All operations at existing facilities not listed in paragraph (a) of this section must meet the organic HAP emissions limits in Table 3 to this subpart and the work practice standards in Table 4 to this subpart that apply, regardless of the quantity of HAP emitted.

(c) If you have a new facility that emits less than 100 tpy of HAP from the combination of all open molding, centrifugal casting, continuous lamination/casting, pultrusion, SMC manufacturing, mixing, and BMC manufacturing, you must meet the organic HAP emissions limits in Table 3 to this subpart and the work practice standards in Table 4 to this subpart that apply to you.

(d)(1) Except as provided in paragraph (d)(2) of this section, if you have a new facility that emits 100 tpy or more of HAP from the combination of all open molding, centrifugal casting, continuous lamination/casting, pultrusion, SMC manufacturing, mixing, and BMC manufacturing, you must reduce the total organic HAP emissions from these operations by at least 95 percent by weight and meet any applicable work practice standards in Table 4 to this subpart that apply to you. As an alternative to meeting 95 percent by weight, you may meet the organic HAP emissions limits in Table 5 to this subpart. If you have a continuous lamination/casting operation, that operation may alternatively meet an organic HAP emissions limit of 1.47 lbs/ton of neat resin plus and neat gel coat plus applied.

(2)(i) If your new facility manufactures large reinforced plastic composites parts using open molding or pultrusion operations, the specific open molding and pultrusion operations used to produce large parts are not required to reduce HAP emissions by 95 weight

sfrattini on LAPJZKW1R2 with $$_JOB
VerDate Sep<11>2014 09:16 Apr 04, 2023 Jkt 256165 PO 00000 Frm 01223 Fmt 8010 Sfmt 8010 Q:\40\256165.XXX PC31

percent, but must meet the emission limits in Table 3 to this subpart.

(ii) A large open molding part is defined as a part that, when the final finished part is enclosed in the smallest rectangular six-sided box into which the part can fit, the total interior volume of the box exceeds 250 cubic feet, or any interior sides of the box exceed 50 square feet.

(iii) A large pultruded part is a part that exceeds an outside perimeter of 24 inches or has more than 350 reinforcements.

(e) If you have a new or existing facility subject to paragraph (a)(2) or (c) of this section at its initial compliance date that subsequently meets or exceeds the 100 tpy threshold in any calendar year, you must notify your permitting authority in your compliance report. You may at the same time request a one-time exemption from the requirements of paragraph (a)(1) or (d) of this section in your compliance report if you can demonstrate all of the following:

(1) The exceedance of the threshold was due to circumstances that will not be repeated.

(2) The average annual organic HAP emissions from the potentially affected operations for the last 3 years were below 100 tpy.

(3) Projected organic HAP emissions for the next calendar year are below 100 tpy, based on projected resin and gel coat use and the HAP emission factors calculated according to the procedures in § 63.5799.

(f) If you apply for an exemption in paragraph (e) of this section and subsequently exceed the HAP emission thresholds specified in paragraph (a)(2) or (c) of this section over the next 12-month period, you must notify the permitting authority in your semiannual report, the exemption is removed, and your facility must comply with paragraph (a)(1) or (d) of this section within 3 years from the time your organic HAP emissions first exceeded the threshold.

(g) If you have repair operations subject to this subpart as defined in § 63.5785, these repair operations must meet the requirements in Tables 3 and 4 to this subpart and are not required to meet the 95 percent organic HAP emissions reduction requirements in paragraph (a)(1) or (d) of this section.

(h) If you use an add-on control device to comply with this subpart, you must meet all requirements contained in 40 CFR part 63, subpart SS.

[70 FR 50124, Aug. 25, 2005]

OPTIONS FOR MEETING STANDARDS

§ 63.5810 What are my options for meeting the standards for open molding and centrifugal casting operations at new and existing sources?

You must use one of the following methods in paragraphs (a) through (d) of this section to meet the standards for open molding or centrifugal casting operations in Table 3 or 5 to this subpart. You may use any control method that reduces organic HAP emissions, including reducing resin and gel coat organic HAP content, changing to non-atomized mechanical application, using covered curing techniques, and routing part or all of your emissions to an add-on control. You may use different compliance options for the different operations listed in Table 3 or 5 to this subpart. The necessary calculations must be completed within 30 days after the end of each month. You may switch between the compliance options in paragraphs (a) through (d) of this section. When you change to an option based on a 12-month rolling average, you must base the average on the previous 12 months of data calculated using the compliance option you are changing to, unless you were previously using an option that did not require you to maintain records of resin and gel coat use. In this case, you must immediately begin collecting resin and gel coat use data and demonstrate compliance 12 months after changing options.

(a) *Demonstrate that an individual resin or gel coat, as applied, meets the applicable emission limit in Table 3 or 5 to this subpart.* (1) Calculate your actual organic HAP emissions factor for each different process stream within each operation type. A process stream is defined as each individual combination of resin or gel coat, application technique, and control technique. Process streams within operations types are

sfrattini on LAPJZKW1R2 with $$_JOB
VerDate Sep<11>2014 09:16 Apr 04, 2023 Jkt 256165 PO 00000 Frm 01224 Fmt 8010 Sfmt 8010 Q:\40\256165.XXX PC31

considered different from each other if any of the following four characteristics vary: the neat resin plus or neat gel coat plus organic HAP content, the gel coat type, the application technique, or the control technique. You must calculate organic HAP emissions factors for each different process stream by using the appropriate equations in Table 1 to this subpart for open molding and for centrifugal casting, or site-specific organic HAP emissions factors discussed in §63.5796. The emission factor calculation should include any and all emission reduction techniques used including any add-on controls. If you are using vapor suppressants to reduce HAP emissions, you must determine the vapor suppressant effectiveness (VSE) by conducting testing according to the procedures specified in appendix A to subpart WWWW of 40 CFR part 63. If you are using an add-on control device to reduce HAP emissions, you must determine the add-on control factor by conducting capture and control efficiency testing using the procedures specified in §63.5850. The organic HAP emissions factor calculated from the equations in Table 1 to this subpart, or a site-specific emissions factor, is multiplied by the add-on control factor to calculate the organic HAP emissions factor after control. Use Equation 1 of this section to calculate the add-on control factor used in the organic HAP emissions factor equations.

$$\text{Add-on Control Factor} = 1 - \frac{\%\ \text{Control Efficiency}}{100} \qquad \text{(Eq. 1)}$$

Where:

Percent Control Efficiency = a value calculated from organic HAP emissions test measurements made according to the requirements of §63.5850 to this subpart.

(2) If the calculated emission factor is less than or equal to the appropriate emission limit, you have demonstrated that this process stream complies with the emission limit in Table 3 to this subpart. It is not necessary that all your process streams, considered individually, demonstrate compliance to use this option for some process streams. However, for any individual resin or gel coat you use, if any of the process streams that include that resin or gel coat are to be used in any averaging calculations described in paragraphs (b) through (d) of this section, then all process streams using that individual resin or gel coat must be included in the averaging calculations.

(b) *Demonstrate that, on average, you meet the individual organic HAP emissions limits for each combination of operation type and resin application method or gel coat type.* Demonstrate that on average you meet the individual organic HAP emissions limits for each unique combination of operation type and resin application method or gel coat type shown in Table 3 to this subpart that applies to you.

(1)(i) Group the process streams described in paragraph (a) to this section by operation type and resin application method or gel coat type listed in Table 3 to this subpart and then calculate a weighted average emission factor based on the amounts of each individual resin or gel coat used for the last 12 months. To do this, sum the product of each individual organic HAP emissions factor calculated in paragraph (a)(1) of this section and the amount of neat resin plus and neat gel coat plus usage that corresponds to the individual factors and divide the numerator by the total amount of neat resin plus and neat gel coat plus used in that operation type as shown in Equation 2 of this section.

sfrattini on LAPJZKW1R2 with $$_JOB
VerDate Sep<11>2014 09:16 Apr 04, 2023 Jkt 256165 PO 00000 Frm 01225 Fmt 8010 Sfmt 8010 Q:\40\256165.XXX PC31
ER25AU05.013</GPH>

$$\text{Average organic HAP Emissions Factor} = \frac{\sum_{i=1}^{n}(\text{Actual Process Stream EF}_i * \text{Material}_i)}{\sum_{i=1}^{n}\text{Material}_i} \quad \text{(Eq. 2)}$$

Where:

Actual Process Stream EF_i = actual organic HAP emissions factor for process stream i, lbs/ton;

$Material_i$ = neat resin plus or neat gel coat plus used during the last 12 calendar months for process stream i, tons;

n = number of process streams where you calculated an organic HAP emissions factor.

(ii) You may, but are not required to, include process streams where you have demonstrated compliance as described in paragraph (a) of this section, subject to the limitations described in paragraph (a)(2) of this section, and you are not required to and should not include process streams for which you will demonstrate compliance using the procedures in paragraph (d) of this section.

(2) Compare each organic HAP emissions factor calculated in paragraph (b)(1) of this section with its corresponding organic HAP emissions limit in Table 3 or 5 to this subpart. If all emissions factors are equal to or less than their corresponding emission limits, then you are in compliance.

(c) *Demonstrate compliance with a weighted average emission limit.* Demonstrate each month that you meet each weighted average of the organic HAP emissions limits in Table 3 or 5 to this subpart that apply to you. When using this option, you must demonstrate compliance with the weighted average organic HAP emissions limit for all your open molding operations, and then separately demonstrate compliance with the weighted average organic HAP emissions limit for all your centrifugal casting operations. Open molding operations and centrifugal casting operations may not be averaged with each other.

(1) Each month calculate the weighted average organic HAP emissions limit for all open molding operations and the weighted average organic HAP emissions limit for all centrifugal casting operations for your facility for the last 12-month period to determine the organic HAP emissions limit you must meet. To do this, multiply the individual organic HAP emissions limits in Table 3 or 5 to this subpart for each open molding (centrifugal casting) operation type by the amount of neat resin plus or neat gel coat plus used in the last 12 months for each open molding (centrifugal casting) operation type, sum these results, and then divide this sum by the total amount of neat resin plus and neat gel coat plus used in open molding (centrifugal casting) over the last 12 months as shown in Equation 3 of this section.

$$\text{Weighted Average Emission Limit} = \frac{\sum_{i=1}^{n}(\text{EL}_i * \text{Material}_i)}{\sum_{i=1}^{n}\text{Material}_i} \quad \text{(Eq. 3)}$$

Where:

EL_i = organic HAP emissions limit for operation type i, lbs/ton from Tables 3 or 5 to this subpart;

$Material_i$ = neat resin plus or neat gel coat plus used during the last 12-month period for operation type i, tons;

n = number of operations.

sfrattini on LAPJZKW1R2 with $$_JOB
VerDate Sep<11>2014 09:16 Apr 04, 2023 Jkt 256165 PO 00000 Frm 01226 Fmt 8010 Sfmt 8010 Q:\40\256165.XXX PC31
ER25AU05.014</GPH> ER25AU05.015</GPH>

(2) Each month calculate your weighted average organic HAP emissions factor for open molding and centrifugal casting. To do this, multiply your actual open molding (centrifugal casting) operation organic HAP emissions factors calculated in paragraph (b)(1) of this section and the amount of neat resin plus and neat gel coat plus used in each open molding (centrifugal casting) operation type, sum the results, and divide this sum by the total amount of neat resin plus and neat gel coat plus used in open molding (centrifugal casting) operations as shown in Equation 4 of this section.

$$\text{Actual Weighted Average organic HAP Emissions Factor} = \frac{\sum_{i=1}^{n}(\text{Actual Operation EF}_i * \text{Material}_i)}{\sum_{i=1}^{n}\text{Material}_i} \quad \text{(Eq. 4)}$$

Where:

Actual Individual EF_i = Actual organic HAP emissions factor for operation type i, lbs/ton;

$Material_i$ = neat resin plus or neat gel coat plus used during the last 12 calendar months for operation type i, tons;

n = number of operations.

(3) Compare the values calculated in paragraphs (c)(1) and (2) of this section. If each 12-month rolling average organic HAP emissions factor is less than or equal to the corresponding 12-month rolling average organic HAP emissions limit, then you are in compliance.

(d) *Meet the organic HAP emissions limit for one application method and use the same resin(s) for all application methods of that resin type.* This option is limited to resins of the same type. The resin types for which this option may be used are noncorrosion-resistant, corrosion-resistant and/or high strength, and tooling.

(1) For any combination of manual resin application, mechanical resin application, filament application, or centrifugal casting, you may elect to meet the organic HAP emissions limit for any one of these application methods and use the same resin in all of the resin application methods listed in this paragraph (d)(1). Table 7 to this subpart presents the possible combinations based on a facility selecting the application process that results in the highest allowable organic HAP content resin. If the resin organic HAP content is below the applicable value shown in Table 7 to this subpart, the resin is in compliance.

(2) You may also use a weighted average organic HAP content for each application method described in paragraph (d)(1) of this section. Calculate the weighted average organic HAP content monthly. Use Equation 2 in paragraph (b)(1) of this section except substitute organic HAP content for organic HAP emissions factor. You are in compliance if the weighted average organic HAP content based on the last 12 months of resin use is less than or equal to the applicable organic HAP contents in Table 7 to this subpart.

(3) You may simultaneously use the averaging provisions in paragraph (b) or (c) of this section to demonstrate compliance for any operations and/or resins you do not include in your compliance demonstrations in paragraphs (d)(1) and (2) of this section. However, any resins for which you claim compliance under the option in paragraphs (d)(1) and (2) of this section may not be included in any of the averaging calculations described in paragraph (b) or (c) of this section.

(4) You do not have to keep records of resin use for any of the individual resins where you demonstrate compliance under the option in paragraph (d)(1) of this section unless you elect to include that resin in the averaging calculations described in paragraph (d)(2) of this section.

[70 FR 50125, Aug. 25, 2005]

sfrattini on LAPJZKW1R2 with $$_JOB
VerDate Sep<11>2014 09:16 Apr 04, 2023 Jkt 256165 PO 00000 Frm 01227 Fmt 8010 Sfmt 8010 Q:\40\256165.XXX PC31
ER25AU05.016</MATH>

§ 63.5820 What are my options for meeting the standards for continuous lamination/casting operations?

You must use one or more of the options in paragraphs (a) through (d) of this section to meet the standards in § 63.5805. Use the calculation procedures in §§ 63.5865 through 63.5890.

(a) *Compliant line option.* Demonstrate that each continuous lamination line and each continuous casting line complies with the applicable standard.

(b) *Averaging option.* Demonstrate that all continuous lamination and continuous casting lines combined, comply with the applicable standard.

(c) *Add-on control device option.* If your operation must meet the 58.5 weight percent organic HAP emissions reduction limit in Table 3 to this subpart, you have the option of demonstrating that you achieve 95 percent reduction of all wet-out area organic HAP emissions.

(d) *Combination option.* Use any combination of options in paragraphs (a) and (b) of this section or, for affected sources at existing facilities, any combination of options in paragraphs (a), (b), and (c) of this section (in which one or more lines meet the standards on their own, two or more lines averaged together meet the standards, and one or more lines have their wet-out areas controlled to a level of 95 percent).

§ 63.5830 What are my options for meeting the standards for pultrusion operations subject to the 60 weight percent organic HAP emissions reductions requirement?

You must use one or more of the options in paragraphs (a) through (e) of this section to meet the 60 weight percent organic HAP emissions limit in Table 3 to this subpart, as required in § 63.5805.

(a) Achieve an overall reduction in organic HAP emissions of 60 weight percent by capturing the organic HAP emissions and venting them to a control device or any combination of control devices. Conduct capture and destruction efficiency testing as specified in 63.5850 to this subpart to determine the percent organic HAP emissions reduction.

(b) Design, install, and operate wet area enclosures and resin drip collection systems on pultrusion machines that meet the criteria in paragraphs (b)(1) through (10) of this section.

(1) The enclosure must cover and enclose the open resin bath and the forming area in which reinforcements are pre-wet or wet-out and moving toward the die(s). The surfaces of the enclosure must be closed except for openings to allow material to enter and exit the enclosure.

(2) For open bath pultrusion machines with a radio frequency pre-heat unit, the enclosure must extend from the beginning of the resin bath to within 12.5 inches or less of the entrance of the radio frequency pre-heat unit. If the stock that is within 12.5 inches or less of the entrance to the radio frequency pre-heat unit has any drip, it must be enclosed. The stock exiting the radio frequency pre-heat unit is not required to be in an enclosure if the stock has no drip between the exit of the radio frequency pre-heat unit to within 0.5 inches of the entrance of the die.

(3) For open bath pultrusion machines without a radio frequency pre-heat unit, the enclosure must extend from the beginning of the resin bath to within 0.5 inches or less of the die entrance.

(4) For pultrusion lines with pre-wet area(s) prior to direct die injection, no more than 12.5 inches of open wet stock is permitted between the entrance of the first pre-wet area and the entrance to the die. If the pre-wet stock has any drip, it must be enclosed.

(5) The total open area of the enclosure must not exceed two times the cross sectional area of the puller window(s) and must comply with the requirements in paragraphs (b)(5)(i) through (iii) of this section.

(i) All areas that are open need to be included in the total open area calculation with the exception of access panels, doors, and/or hatches that are part of the enclosure.

(ii) The area that is displaced by entering reinforcement or exiting product is considered open.

(iii) Areas that are covered by brush covers are considered closed.

(6) Open areas for level control devices, monitoring devices, agitation

sfrattini on LAPJZKW1R2 with $$_JOB
VerDate Sep<11>2014 09:16 Apr 04, 2023 Jkt 256165 PO 00000 Frm 01228 Fmt 8010 Sfmt 8010 Q:\40\256165.XXX PC31

shafts, and fill hoses must have no more than 1.0 inch clearance.

(7) The access panels, doors, and/or hatches that are part of the enclosure must close tightly. Damaged access panels, doors, and/or hatches that do not close tightly must be replaced.

(8) The enclosure may not be removed from the pultrusion line, and access panels, doors, and/or hatches that are part of the enclosure must remain closed whenever resin is in the bath, except for the time period discussed in paragraph (b)(9) of this section.

(9) The maximum length of time the enclosure may be removed from the pultrusion line or the access panels, doors, and/or hatches and may be open, is 30 minutes per 8 hour shift, 45 minutes per 12 hour shift, or 90 minutes per day if the machine is operated for 24 hours in a day. The time restrictions do not apply if the open doors or panels do not cause the limit of two times the puller window area to be exceeded. Facilities may average the times that access panels, doors, and/or hatches are open across all operating lines. In that case the average must not exceed the times shown in this paragraph (b)(9). All lines included in the average must have operated the entire time period being averaged.

(10) No fans, blowers, and/or air lines may be allowed within the enclosure. The enclosure must not be ventilated.

(c) Use direct die injection pultrusion machines with resin drip collection systems that meet all the criteria specified in paragraphs (c)(1) through (3) of this section.

(1) All the resin that is applied to the reinforcement is delivered directly to the die.

(2) No exposed resin is present, except at the face of the die.

(3) Resin drip is captured in a closed system and recycled back to the process.

(d) Use a preform injection system that meets the definition in § 63.5935

(e) Use any combination of options in paragraphs (a) through (d) of this section in which different pultrusion lines comply with different options described in paragraphs (a) through (d) of this section, and

(1) Each individual pultrusion machine meets the 60 percent reduction requirement, or

(2) The weighted average reduction based on resin throughput of all machines combined is 60 percent. For purposes of the average percent reduction calculation, wet area enclosures reduce organic HAP emissions by 60 percent, and direct die injection and preform injection reduce organic HAP emissions by 90 percent.

[68 FR 19402, Apr. 21, 2003, as amended at 70 FR 50127, Aug. 25, 2005]

GENERAL COMPLIANCE REQUIREMENTS

§ 63.5835 What are my general requirements for complying with this subpart?

(a) You must be in compliance at all times with the work practice standards in Table 4 to this subpart, as well as the organic HAP emissions limits in Tables 3, or 5, or the organic HAP content limits in Table 7 to this subpart, as applicable, that you are meeting without the use of add-on controls.

(b) You must be in compliance with all organic HAP emissions limits in this subpart that you meet using add-on controls at all times.

(c) You must always operate and maintain your affected source, including air pollution control and monitoring equipment, according to the provisions in § 63.6(e)(1)(i).

[68 FR 19402, Apr. 21, 2003, as amended at 71 FR 20466, Apr. 20, 2006; 85 FR 15975, Mar. 20, 2020]

TESTING AND INITIAL COMPLIANCE REQUIREMENTS

§ 63.5840 By what date must I conduct a performance test or other initial compliance demonstration?

You must conduct performance tests, performance evaluations, design evaluations, capture efficiency testing, and other initial compliance demonstrations by the compliance date specified in Table 2 to this subpart, with three exceptions. Open molding and centrifugal casting operations that elect to meet an organic HAP emissions limit on a 12-month rolling average must initiate collection of the required

sfrattini on LAPJZKW1R2 with $$_JOB
VerDate Sep<11>2014 09:16 Apr 04, 2023 Jkt 256165 PO 00000 Frm 01229 Fmt 8010 Sfmt 8010 Q:\40\256165.XXX PC31

data on the compliance date, and demonstrate compliance 1 year after the compliance date. New sources that use add-on controls to initially meet compliance must demonstrate compliance within 180 days after their compliance date.

§ 63.5845 When must I conduct subsequent performance tests?

You must conduct a performance test every 5 years following the initial performance test for any standard you meet with an add-on control device.

§ 63.5850 How do I conduct performance tests, performance evaluations, and design evaluations?

(a) If you are using any add-on controls to meet an organic HAP emissions limit in this subpart, you must conduct each performance test, performance evaluation, and design evaluation in 40 CFR part 63, subpart SS, that applies to you. The basic requirements for performance tests, performance evaluations, and design evaluations are presented in Table 6 to this subpart.

(b) Each performance test must be conducted according to the requirements in § 63.7(e)(1) and under the specific conditions that 40 CFR part 63, subpart SS, specifies.

(c) Each performance evaluation must be conducted according to the requirements in § 63.8(e) as applicable and under the specific conditions that 40 CFR part 63, subpart SS, specifies.

(d) You may not conduct performance tests or performance evaluations during periods of startup, shutdown, or malfunction, as specified in § 63.7(e)(1).

(e) You must conduct the control device performance test using the emission measurement methods specified in paragraphs (e)(1) through (5) of this section.

(1) Use either Method 1 or 1A of appendix A to 40 CFR part 60, as appropriate, to select the sampling sites.

(2) Use Method 2, 2A, 2C, 2D, 2F or 2G of appendix A to 40 CFR part 60, as appropriate, to measure gas volumetric flow rate.

(3) Use Method 18 of appendix A to 40 CFR part 60 to measure organic HAP emissions or use Method 25A of appendix A to 40 CFR part 60 to measure total gaseous organic emissions as a surrogate for total organic HAP emissions. If you use Method 25A, you must assume that all gaseous organic emissions measured as carbon are organic HAP emissions. If you use Method 18 and the number of organic HAP in the exhaust stream exceeds five, you must take into account the use of multiple chromatographic columns and analytical techniques to get an accurate measure of at least 90 percent of the total organic HAP mass emissions. Do not use Method 18 to measure organic HAP emissions from a combustion device; use instead Method 25A and assume that all gaseous organic mass emissions measured as carbon are organic HAP emissions.

(4) You may use American Society for Testing and Materials (ASTM) D6420–99 (available for purchase from at least one of the following addresses: 100 Barr Harbor Drive, West Conshohocken, PA 19428–2959; or University Microfilms International, 300 North Zeeb Road, Ann Arbor, MI 48106.) in lieu of Method 18 of 40 CFR part 60, appendix A, under the conditions specified in paragraphs (c)(4)(i) through (iii) of this section.

(i) If the target compound(s) is listed in Section 1.1 of ASTM D6420–99 and the target concentration is between 150 parts per billion by volume and 100 parts per million by volume.

(ii) If the target compound(s) is not listed in Section 1.1 of ASTM D6420–99, but is potentially detected by mass spectrometry, an additional system continuing calibration check after each run, as detailed in Section 10.5.3 of ASTM D6420–99, must be followed, met, documented, and submitted with the performance test report even if you do not use a moisture condenser or the compound is not considered soluble.

(iii) If a minimum of one sample/analysis cycle is completed at least every 15 minutes.

(5) Use the procedures in EPA Method 3B of appendix A to 40 CFR part 60 to determine an oxygen correction factor if required by § 63.997(e)(2)(iii)(C). You may use American Society of Mechanical Engineers (ASME) PTC 19–10–1981–Part 10 (available for purchase from ASME, P.O. Box 2900, 22 Law Drive, Fairfield, New Jersey, 07007–2900,

sfrattini on LAPJZKW1R2 with $$_JOB
VerDate Sep<11>2014 09:16 Apr 04, 2023 Jkt 256165 PO 00000 Frm 01230 Fmt 8010 Sfmt 8010 Q:\40\256165.XXX PC31

or online at *www.asme.org/catalog*) as an alternative to EPA Method 3B of appendix A to 40 CFR part 60.

(f) The control device performance test must consist of three runs and each run must last at least 1 hour. The production conditions during the test runs must represent normal production conditions with respect to the types of parts being made and material application methods. The production conditions during the test must also represent maximum potential emissions with respect to the organic HAP content of the materials being applied and the material application rates.

(g) If you are using a concentrator/oxidizer control device, you must test the combined flow upstream of the concentrator, and the combined outlet flow from both the oxidizer and the concentrator to determine the overall control device efficiency. If the outlet flow from the concentrator and oxidizer are exhausted in separate stacks, you must test both stacks simultaneously with the inlet to the concentrator to determine the overall control device efficiency.

(h) During the test, you must also monitor and record separately the amounts of production resin, tooling resin, pigmented gel coat, clear gel coat, and tooling gel coat applied inside the enclosure that is vented to the control device.

§ 63.5855 What are my monitor installation and operation requirements?

You must monitor and operate all add-on control devices according to the procedures in 40 CFR part 63, subpart SS.

§ 63.5860 How do I demonstrate initial compliance with the standards?

(a) You demonstrate initial compliance with each organic HAP emissions standard in paragraphs (a) through (h) of § 63.5805 that applies to you by using the procedures shown in Tables 8 and 9 to this subpart.

(b) If using an add-on control device to demonstrate compliance, you must also establish each control device operating limit in 40 CFR part 63, subpart SS, that applies to you.

EMISSION FACTOR, PERCENT REDUCTION, AND CAPTURE EFFICIENCY CALCULATION PROCEDURES FOR CONTINUOUS LAMINATION/CASTING OPERATIONS

§ 63.5865 What data must I generate to demonstrate compliance with the standards for continuous lamination/casting operations?

(a) For continuous lamination/casting affected sources complying with a percent reduction requirement, you must generate the data identified in Tables 10 and 11 to this subpart for each data requirement that applies to your facility.

(b) For continuous lamination/casting affected sources complying with a lbs/ton limit, you must generate the data identified in Tables 11 and 12 to this subpart for each data requirement that applies to your facility.

§ 63.5870 How do I calculate annual uncontrolled and controlled organic HAP emissions from my wet-out area(s) and from my oven(s) for continuous lamination/casting operations?

To calculate your annual uncontrolled and controlled organic HAP emissions from your wet-out areas and from your ovens, you must develop uncontrolled and controlled wet-out area and uncontrolled and controlled oven organic HAP emissions estimation equations or factors to apply to each formula applied on each line, determine how much of each formula for each end product is applied each year on each line, and assign uncontrolled and controlled wet-out area and uncontrolled and controlled oven organic HAP emissions estimation equations or factors to each formula. You must determine the overall capture efficiency using the procedures in § 63.5850 to this subpart.

(a) To develop uncontrolled and controlled organic HAP emissions estimation equations and factors, you must, at a minimum, do the following, as specified in paragraphs (a)(1) through (6) of this section:

(1) Identify each end product and the thickness of each end product produced on the line. Separate end products into the following end product groupings, as applicable: corrosion-resistant gel

sfrattini on LAPJZKW1R2 with $$_JOB
VerDate Sep<11>2014 09:16 Apr 04, 2023 Jkt 256165 PO 00000 Frm 01231 Fmt 8010 Sfmt 8010 Q:\40\256165.XXX PC31

coated end products, noncorrosion-resistant gel coated end products, corrosion-resistant nongel coated end products, and noncorrosion-resistant nongel coated end products. This step creates end product/thickness combinations.

(2) Identify each formula used on the line to produce each end product/thickness combination. Identify the amount of each such formula applied per year. Rank each formula used to produce each end product/thickness combination according to usage within each end product/thickness combination.

(3) For each end product/thickness combination being produced, select the formula with the highest usage rate for testing.

(4) If not already selected, also select the worst-case formula (likely to be associated with the formula with the highest organic HAP content, type of HAP, application of gel coat, thin product, low line speed, higher resin table temperature) amongst all formulae. (You may use the results of the worst-case formula test for all formulae if desired to limit the amount of testing required.)

(5) For each formula selected for testing, conduct at least one test (consisting of three runs). During the test, track information on organic HAP content and type of HAP, end product thickness, line speed, and resin temperature on the wet-out area table.

(6) Using the test results, develop uncontrolled and controlled organic HAP emissions estimation equations (or factors) or series of equations (or factors) that best fit the results for estimating uncontrolled and controlled organic HAP emissions, taking into account the organic HAP content and type of HAP, end product thickness, line speed, and resin temperature on the wet-out area table.

(b) In lieu of using the method specified in paragraph (a) of this section for developing uncontrolled and controlled organic HAP emissions estimation equations and factors, you may either method specified in paragraphs (b)(1) and (2) of this section, as applicable.

(1) For either uncontrolled or controlled organic HAP emissions estimates, you may use previously established, facility-specific organic HAP emissions equations or factors, provided they allow estimation of both wet-out area and oven organic HAP emissions, where necessary, and have been approved by your permitting authority. If a previously established equation or factor is specific to the wet-out area only, or to the oven only, then you must develop the corresponding uncontrolled or controlled equation or factor for the other organic HAP emissions source.

(2) For uncontrolled (controlled) organic HAP emissions estimates, you may use controlled (uncontrolled) organic HAP emissions estimates and control device destruction efficiency to calculate your uncontrolled (controlled) organic HAP emissions provided the control device destruction efficiency was calculated at the same time you collected the data to develop your facility's controlled (uncontrolled) organic HAP emissions estimation equations and factors.

(c) Assign to each formula an uncontrolled organic HAP emissions estimation equation or factor based on the end product/thickness combination for which that formula is used.

(d)(1) To calculate your annual uncontrolled organic HAP emissions from wet-out areas that do not have any capture and control and from wet-out areas that are captured by an enclosure but are vented to the atmosphere and not to a control device, multiply each formula's annual usage by its appropriate organic HAP emissions estimation equation or factor and sum the individual results.

(2) To calculate your annual uncontrolled organic HAP emissions that escape from the enclosure on the wet-out area, multiply each formula's annual usage by its appropriate uncontrolled organic HAP emissions estimation equation or factor, sum the individual results, and multiply the summation by 1 minus the percent capture (expressed as a fraction).

(3) To calculate your annual uncontrolled oven organic HAP emissions, multiply each formula's annual usage by its appropriate uncontrolled organic HAP emissions estimation equation or factor and sum the individual results.

sfrattini on LAPJZKW1R2 with $$_JOB
VerDate Sep<11>2014 09:16 Apr 04, 2023 Jkt 256165 PO 00000 Frm 01232 Fmt 8010 Sfmt 8010 Q:\40\256165.XXX PC31

(4) To calculate your annual controlled organic HAP emissions, multiply each formula's annual usage by its appropriate organic HAP emissions estimation equation or factor and sum the individual results to obtain total annual controlled organic HAP emissions.

(e) Where a facility is calculating both uncontrolled and controlled organic HAP emissions estimation equations and factors, you must test the same formulae. In addition, you must develop both sets of equations and factors from the same tests.

§ 63.5875 How do I determine the capture efficiency of the enclosure on my wet-out area and the capture efficiency of my oven(s) for continuous lamination/casting operations?

(a) The capture efficiency of a wet-out area enclosure is assumed to be 100 percent if it meets the design and operation requirements for a permanent total enclosure (PTE) specified in EPA Method 204 of appendix M to 40 CFR part 51. If a PTE does not exist, then a temporary total enclosure must be constructed and verified using EPA Method 204, and capture efficiency testing must be determined using EPA Methods 204B through E of appendix M to 40 CFR part 51.

(b) The capture efficiency of an oven is to be considered 100 percent, provided the oven is operated under negative pressure.

§ 63.5880 How do I determine how much neat resin plus is applied to the line and how much neat gel coat plus is applied to the line for continuous lamination/casting operations?

Use the following procedures to determine how much neat resin plus and neat gel coat plus is applied to the line each year.

(a) Track formula usage by end product/thickness combinations.

(b) Use in-house records to show usage. This may be either from automated systems or manual records.

(c) Record daily the usage of each formula/end product combination on each line. This is to be recorded at the end of each run (*i.e.*, when a changeover in formula or product is made) and at the end of each shift.

(d) Sum the amounts from the daily records to calculate annual usage of each formula/end product combination by line.

§ 63.5885 How do I calculate percent reduction to demonstrate compliance for continuous lamination/casting operations?

You may calculate percent reduction using any of the methods in paragraphs (a) through (d) of this section.

(a) *Compliant line option*. If all of your wet-out areas have PTE that meet the requirements of EPA Method 204 of appendix M of 40 CFR part 51, and all of your wet-out area organic HAP emissions and oven organic HAP emissions are vented to an add-on control device, use Equation 1 of this section to demonstrate compliance. In all other situations, use Equation 2 of this section to demonstrate compliance.

$$PR = \frac{(\text{Inlet}) - (\text{Outlet})}{(\text{Inlet})} \times 100 \qquad \text{(Eq. 1)}$$

Where:

PR = percent reduction;

Inlet + HAP emissions entering the control device, lbs per year;

Outlet = HAP emissions existing the control device to the atmosphere, lbs per year.

sfrattini on LAPJZKW1R2 with $$_JOB
VerDate Sep<11>2014 09:16 Apr 04, 2023 Jkt 256165 PO 00000 Frm 01233 Fmt 8010 Sfmt 8010 Q:\40\256165.XXX PC31
ER25AU05.017</GPH>

$$PR = \frac{(WAE_{ci} + O_{ci}) - (WAE_{co} + O_{co})}{(WAE_{ci} + WAE_u + O_{ci} + O_u)} \times 100 \qquad \text{(Eq. 2)}$$

Where:

PR = percent reduction;

$WAEi_{ci}$ = wet-out area organic HAP emissions, lbs per year, vented to a control device;

$WAEi_u$ = wet-out area organic HAP emissions, lbs per year, not vented to a control device;

Oj_u = oven organic HAP emissions, lbs per year, not vented to a control device;

Oj_{ci} = oven organic HAP emissions, lbs per year, vented to a control device;

$WAEi_{co}$ = wet-out area organic HAP emissions, lbs per year, from the control device outlet;

Oj_{co} = oven organic HAP emissions, lbs per year, from the control device outlet.

(b) *Averaging option.* Use Equation 3 of this section to calculate percent reduction.

$$PR = \frac{\left(\sum_{i=1}^{m} WAEi_{ci} + \sum_{j=1}^{n} Oj_{ci}\right) - \left(\sum_{i=1}^{m} WAEi_{co} + \sum_{j=1}^{n} Oj_{co}\right)}{\left(\sum_{i=1}^{m} WAEi_{ci} + \sum_{j=1}^{n} Oj_{ci} + \sum_{i=1}^{m} WAEi_u + \sum_{j=1}^{n} Oj_u\right)} \times 100 \qquad \text{(Eq. 3)}$$

Where:

PR = percent reduction;

$WAEi_{ci}$ = wet-out area organic HAP emissions from wet-out area i, lbs per year, sent to a control device;

$WAEi_u$ = wet-out area organic HAP emissions from wet-out area i, lbs per year, not sent to a control device;

$WAEi_{co}$ = wet-out area organic HAP emissions from wet-out area i, lbs per year, at the outlet of a control device;

Oj_u = organic HAP emissions from oven j, lbs per year, not sent to a control device;

Oj_{ci} = organic HAP emissions from oven j, lbs per year, sent to a control device;

Oj_{co} = organic HAP emissions from oven j, lbs per year, at the outlet of the control device;

m = number of wet-out areas;

n = number of ovens.

(c) *Add-on control device option.* Use Equation 1 of this section to calculate percent reduction.

(d) *Combination option.* Use Equations 1 through 3 of this section, as applicable, to calculate percent reduction.

[70 FR 50127, Aug. 25, 2005]

§ 63.5890 How do I calculate an organic HAP emissions factor to demonstrate compliance for continuous lamination/casting operations?

(a) *Compliant line option.* Use Equation 1 of this section to calculate an organic HAP emissions factor in lbs/ton.

$$E = \frac{WAE_u + WAE_c + O_u + O_c}{(R + G)} \qquad \text{(Eq. 1)}$$

Where:

E = HAP emissions factor in lbs/ton of resin and gel coat

WAE_u = uncontrolled wet-out area organic HAP emissions, lbs per year

WAE_c = controlled wet-out area organic HAP emissions, lbs per year

O_u = uncontrolled oven organic HAP emissions, lbs per year

O_c = controlled oven organic HAP emissions, lbs per year

R = total usage of neat resin plus, tpy

G = total usage of neat gel coat plus, tpy

(b) *Averaging option.* Use Equation 2 of this section to demonstrate compliance.

sfrattini on LAPJZKW1R2 with $$_JOB
VerDate Sep<11>2014 09:16 Apr 04, 2023 Jkt 256165 PO 00000 Frm 01234 Fmt 8010 Sfmt 8010 Q:\40\256165.XXX PC31
ER25AU05.018</GPH> ER25AU05.019</GPH> ER21AP03.007</MATH>

$$E = \frac{\sum_{i=1}^{m} WAE_{ui} + \sum_{i=1}^{o} WAE_{ci} + \sum_{j=1}^{n} O_{uj} + \sum_{j=1}^{p} O_{cj}}{(R+G)} \qquad \text{(Eq. 2)}$$

Where:

E = HAP emissions factor in lbs/ton of resin and gel coat

WAE_{ui} = uncontrolled organic HAP emissions from wet-out area i, lbs per year

WAE_{ci} = controlled organic HAP emissions from wet-out area i, lbs per year

O_{uj} = uncontrolled organic HAP emissions from oven j, lbs per year

O_{cj} = controlled organic HAP emissions from oven j, lbs per year

i = number of wet-out areas

j = number of ovens

m = number of wet-out areas uncontrolled

n = number of ovens uncontrolled

o = number of wet-out areas controlled

p = number of ovens controlled

R = total usage of neat resin plus, tpy

G = total usage of neat gel coat plus, tpy

(c) *Combination option.* Use Equations 1 and 2 of this section, as applicable, to demonstrate compliance.

CONTINUOUS COMPLIANCE REQUIREMENTS

§63.5895 How do I monitor and collect data to demonstrate continuous compliance?

(a) During production, you must collect and keep a record of data as indicated in 40 CFR part 63, subpart SS, if you are using an add-on control device.

(b) You must monitor and collect data as specified in paragraphs (b)(1) through (4) of this section.

(1) Except for monitoring malfunctions, associated repairs, and required quality assurance or control activities (including, as applicable, calibration checks and required zero and span adjustments), you must conduct all monitoring in continuous operation (or collect data at all required intervals) at all times that the affected source is operating.

(2) You may not use data recorded during monitoring malfunctions, associated repairs, and required quality assurance or control activities for purposes to this subpart, including data averages and calculations, or fulfilling a minimum data availability requirement, if applicable. You must use all the data collected during all other periods in assessing the operation of the control device and associated control system.

(3) At all times, you must maintain necessary parts for routine repairs of the monitoring equipment.

(4) A monitoring malfunction is any sudden, infrequent, not reasonably preventable failure of the monitoring equipment to provide valid data. Monitoring failures that are caused in part by poor maintenance or careless operation are not malfunctions.

(c) You must collect and keep records of resin and gel coat use, organic HAP content, and operation where the resin is used if you are meeting any organic HAP emissions limits based on an organic HAP emissions limit in Tables 3 or 5 to this subpart. You must collect and keep records of resin and gel coat use, organic HAP content, and operation where the resin is used if you are meeting any organic HAP content limits in Table 7 to this subpart if you are averaging organic HAP contents. Resin use records may be based on purchase records if you can reasonably estimate how the resin is applied. The organic HAP content records may be based on MSDS or on resin specifications supplied by the resin supplier.

(d) Resin and gel coat use records are not required for the individual resins and gel coats that are demonstrated, as applied, to meet their applicable emission as defined in §63.5810(a). However, you must retain the records of resin and gel coat organic HAP content, and you must include the list of these resins and gel coats and identify their application methods in your semiannual compliance reports. If after you have initially demonstrated that a specific combination of an individual resin or gel coat, application method, and controls meets its applicable emission limit, and the resin or gel coat changes or the organic HAP content increases, or you change the application method

sfrattini on LAPJZKW1R2 with $$_JOB
VerDate Sep<11>2014 09:16 Apr 04, 2023 Jkt 256165 PO 00000 Frm 01235 Fmt 8010 Sfmt 8010 Q:\40\256165.XXX PC31
ER21AP03.008</MATH>

or controls, then you again must demonstrate that the individual resin or gel coat meets its emission limit as specified in paragraph (a) of § 63.5810. If any of the previously mentioned changes results in a situation where an individual resin or gel coat now exceeds its applicable emission limit in Table 3 or 5 of this subpart, you must begin collecting resin and gel coat use records and calculate compliance using one of the averaging options on a 12-month rolling average.

(e) For each of your pultrusion machines, you must record all times that wet area enclosures doors or covers are open and there is resin present in the resin bath.

[68 FR 19402, Apr. 21, 2003, as amended at 70 FR 50128, Aug. 25, 2005]

§ 63.5900 How do I demonstrate continuous compliance with the standards?

(a) You must demonstrate continuous compliance with each standard in § 63.5805 that applies to you according to the methods specified in paragraphs (a)(1) through (3) of this section.

(1) Compliance with organic HAP emissions limits for sources using add-on control devices is demonstrated following the procedures in 40 CFR part 63, subpart SS. Sources using add-on controls may also use continuous emissions monitors to demonstrate continuous compliance as an alternative to control parameter monitoring.

(2) Compliance with organic HAP emissions limits is demonstrated by maintaining an organic HAP emissions factor value less than or equal to the appropriate organic HAP emissions limit listed in Table 3 or 5 to this subpart, on a 12-month rolling average, and/or by including in each compliance report a statement that individual resins and gel coats, as applied, meet the appropriate organic HAP emissions limits, as discussed in § 63.5895(d).

(3) Compliance with organic HAP content limits in Table 7 to this subpart is demonstrated by maintaining an average organic HAP content value less than or equal to the appropriate organic HAP contents listed in Table 7 to this subpart, on a 12-month rolling average, and/or by including in each compliance report a statement that resins and gel coats individually meet the appropriate organic HAP content limits in Table 7 to this subpart, as discussed in § 63.5895(d).

(4) Compliance with the work practice standards in Table 4 to this subpart is demonstrated by performing the work practice required for your operation.

(b) You must report each deviation from each standard in § 63.5805 that applies to you. The deviations must be reported according to the requirements in § 63.5910.

(c) You must meet the organic HAP emissions limits and work practice standards that apply to you at all times.

[68 FR 19402, Apr. 21, 2003, as amended at 70 FR 50128, Aug. 25, 2005; 71 FR 20466, Apr. 20, 2006; 85 FR 15975, Mar. 20, 2020]

NOTIFICATIONS, REPORTS, AND RECORDS

§ 63.5905 What notifications must I submit and when?

(a) You must submit all of the notifications in Table 13 to this subpart that apply to you by the dates specified in Table 13 to this subpart. The notifications are described more fully in 40 CFR part 63, subpart A, referenced in Table 13 to this subpart.

(b) If you change any information submitted in any notification, you must submit the changes in writing to the Administrator within 15 calendar days after the change.

§ 63.5910 What reports must I submit and when?

(a) You must submit each report in Table 14 to this subpart that applies to you.

(b) Unless the Administrator has approved a different schedule for submission of reports under § 63.10(a), you must submit each report by the date specified in Table 14 to this subpart and according to paragraphs (b)(1) through (5) of this section.

(1) The first compliance report must cover the period beginning on the compliance date that is specified for your affected source in § 63.5800 and ending on June 30 or December 31, whichever date is the first date following the end

sfrattini on LAPJZKW1R2 with $$_JOB
VerDate Sep<11>2014 09:16 Apr 04, 2023 Jkt 256165 PO 00000 Frm 01236 Fmt 8010 Sfmt 8010 Q:\40\256165.XXX PC31

of the first calendar half after the compliance date that is specified for your source in §63.5800.

(2) The first compliance report must be postmarked or delivered no later than July 31 or January 31, whichever date follows the end of the first calendar half after the compliance date that is specified for your affected source in §63.5800.

(3) Each subsequent compliance report must cover the semiannual reporting period from January 1 through June 30 or the semiannual reporting period from July 1 through December 31.

(4) Each subsequent compliance report must be postmarked or delivered no later than July 31 or January 31, whichever date is the first date following the end of the semiannual reporting period.

(5) For each affected source that is subject to permitting requirements pursuant to 40 CFR part 70 or 71, and if the permitting authority has established dates for submitting semiannual reports pursuant to §70.6 (a)(3)(iii)(A) or §71.6(a)(3)(iii)(A), you may submit the first and subsequent compliance reports according to the dates the permitting authority has established instead of according to the dates in paragraphs (b)(1) through (4) of this section.

(c) The compliance report must contain the information in paragraphs (c)(1) through (6) of this section:

(1) Company name and address.

(2) Statement by a responsible official with that official's name, title, and signature, certifying the truth, accuracy, and completeness of the content of the report.

(3) Date of the report and beginning and ending dates of the reporting period.

(4) [Reserved]

(5) If there are no deviations from any organic HAP emissions limitations (emissions limit and operating limit) that apply to you, and there are no deviations from the requirements for work practice standards in Table 4 to this subpart, a statement that there were no deviations from the organic HAP emissions limitations or work practice standards during the reporting period.

(6) If there were no periods during which the continuous monitoring system (CMS), including a continuous emissions monitoring system (CEMS) and an operating parameter monitoring system were out of control, as specified in §63.8(c)(7), a statement that there were no periods during which the CMS was out of control during the reporting period.

(d) For each deviation from an organic HAP emissions limitation or operating limit and for each deviation from the requirements for work practice standards that occurs at an affected source where you are not using a CMS to comply with the organic HAP emissions limitations or work practice standards in this subpart, the compliance report must contain the information in paragraphs (c)(1) through (3) of this section and in paragraphs (d)(1) and (2) of this section.

(1) The total operating time of each affected source during the reporting period.

(2) Information on the number, duration, and cause of deviations (including unknown cause, if applicable), as applicable, and the corrective action taken.

(e) For each deviation from an organic HAP emissions limitation (*i.e.*, emissions limit and operating limit) occurring at an affected source where you are using a CMS to comply with the organic HAP emissions limitation in this subpart, you must include the information in paragraphs (c)(1) through (3) of this section and in paragraphs (e)(1) through (6) of this section.

(1) The date and time that each malfunction started and stopped.

(2) The date and time that each CMS was inoperative, except for zero (low-level) and high-level checks.

(3) The date, time, and duration that each CMS was out of control, including the information in §63.8(c)(8).

(4) The date and time that each deviation started and stopped.

(5) A summary of the total duration of the deviation during the reporting period and the total duration as a percent of the total source operating time during that reporting period.

(6) A breakdown of the total duration of the deviations during the reporting

sfrattini on LAPJZKW1R2 with $$_JOB
VerDate Sep<11>2014 09:16 Apr 04, 2023 Jkt 256165 PO 00000 Frm 01237 Fmt 8010 Sfmt 8010 Q:\40\256165.XXX PC31

period into those that are due to control equipment problems, process problems, other known causes, and other unknown causes.

(f) You must report if you have exceeded the 100 tpy organic HAP emissions threshold if that exceedance would make your facility subject to § 63.5805(a)(1) or (d). Include with this report any request for an exemption under § 63.5805(e). If you receive an exemption under § 63.5805(e) and subsequently exceed the 100 tpy organic HAP emissions threshold, you must report this exceedance as required in § 63.5805(f).

(g) Each affected source that has obtained a title V operating permit pursuant to 40 CFR part 70 or 71 must report all deviations as defined in this subpart in the semiannual monitoring report required by § 70.6(a)(3)(iii)(A) or § 71.6(a)(3)(iii)(A). If an affected source submits a compliance report pursuant to Table 14 to this subpart along with, or as part of, the semiannual monitoring report required by § 70.6(a)(3)(iii)(A) or § 71.6(a)(3)(iii)(A), and the compliance report includes all required information concerning deviations from any organic HAP emissions limitation (including any operating limit) or work practice requirement in this subpart, submission of the compliance report shall be deemed to satisfy any obligation to report the same deviations in the semiannual monitoring report. However, submission of a compliance report shall not otherwise affect any obligation the affected source may have to report deviations from permit requirements to the permitting authority.

(h) Submit compliance reports based on the requirements in §§ 63.5910 and 63.5912 and table 14 to this subpart, and not based on the requirements in § 63.999.

(i) Where multiple compliance options are available, you must state in your next compliance report if you have changed compliance options since your last compliance report.

[68 FR 19402, Apr. 21, 2003, as amended at 70 FR 50128, Aug. 25, 2005; 85 FR 15975, Mar. 20, 2020]

§ 63.5912 How do I submit my reports?

(a) Within 60 days after the date of completing each performance test required by this subpart, you must submit the results of the performance test following the procedures specified in paragraphs (a)(1) through (3) of this section.

(1) Data collected using test methods supported by the EPA's Electronic Reporting Tool (ERT) as listed on the EPA's ERT website (*https://www.epa.gov/electronic-reporting-air-emissions/electronic-reporting-tool-ert*) at the time of the test. Submit the results of the performance test to the EPA via the Compliance and Emissions Data Reporting Interface (CEDRI), which can be accessed through the EPA's Central Data Exchange (CDX) (*https://cdx.epa.gov/*). The data must be submitted in a file format generated through the use of the EPA's ERT. Alternatively, you may submit an electronic file consistent with the extensible markup language (XML) schema listed on the EPA's ERT website.

(2) Data collected using test methods that are not supported by the EPA's ERT as listed on the EPA's ERT website at the time of the test. The results of the performance test must be included as an attachment in the ERT or an alternate electronic file consistent with the XML schema listed on the EPA's ERT website. Submit the ERT generated package or alternative file to the EPA via CEDRI.

(3) Confidential business information (CBI). If you claim some of the information submitted under paragraph (a)(1) of this section is CBI, you must submit a complete file, including information claimed to be CBI, to the EPA. The file must be generated through the use of the EPA's ERT or an alternate electronic file consistent with the XML schema listed on the EPA's ERT website. Submit the file on a compact disc, flash drive, or other commonly used electronic storage medium and clearly mark the medium as CBI. Mail the electronic medium to U.S. EPA/OAQPS/CORE CBI Office, Attention: Group Leader, Measurement Policy Group, MD C404–02, 4930 Old Page Rd., Durham, NC 27703. The same file with the CBI omitted must be submitted to

sfrattini on LAPJZKW1R2 with $$_JOB
VerDate Sep<11>2014 09:16 Apr 04, 2023 Jkt 256165 PO 00000 Frm 01238 Fmt 8010 Sfmt 8010 Q:\40\256165.XXX PC31

the EPA via the EPA's CDX as described in paragraph (a)(1) of this section.

(b) Within 60 days after the date of completing each continuous monitoring system (CMS) performance evaluation as defined in §63.2, you must submit the results of the performance evaluation following the procedures specified in paragraphs (b)(1) through (3) of this section.

(1) Performance evaluations of CMS measuring relative accuracy test audit (RATA) pollutants that are supported by the EPA's ERT as listed on the EPA's ERT website at the time of the evaluation. Submit the results of the performance evaluation to the EPA via CEDRI, which can be accessed through the EPA's CDX. The data must be submitted in a file format generated through the use of the EPA's ERT. Alternatively, you may submit an electronic file consistent with the XML schema listed on the EPA's ERT website.

(2) Performance evaluations of CMS measuring RATA pollutants that are not supported by the EPA's ERT as listed on the EPA's ERT website at the time of the evaluation. The results of the performance evaluation must be included as an attachment in the ERT or an alternate electronic file consistent with the XML schema listed on the EPA's ERT website. Submit the ERT generated package or alternative file to the EPA via CEDRI.

(3) Confidential business information (CBI). If you claim some of the information submitted under paragraph (a)(1) of this section is CBI, you must submit a complete file, including information claimed to be CBI, to the EPA. The file must be generated through the use of the EPA's ERT or an alternate electronic file consistent with the XML schema listed on the EPA's ERT website. Submit the file on a compact disc, flash drive, or other commonly used electronic storage medium and clearly mark the medium as CBI. Mail the electronic medium to U.S. EPA/OAQPS/CORE CBI Office, Attention: Group Leader, Measurement Policy Group, MD C404–02, 4930 Old Page Rd., Durham, NC 27703. The same file with the CBI omitted must be submitted to the EPA via the EPA's CDX as described in paragraph (a)(1) of this section.

(c) For sources that commence construction or reconstruction before or on May 17, 2019, you must submit to the Administrator semiannual compliance reports of the information required in §63.5910(c),(d), (e), (f), and (i) beginning on September 16, 2020. For sources that commence construction or reconstruction after May 17, 2019, you must submit to the Administrator semiannual compliance reports of the information required in §63.5910(c), (d), (e), (f), and (i) beginning on March 20, 2020, or upon startup, whichever is later.

(d) If you are required to submit reports following the procedure specified in this paragraph (d), beginning on September 17, 2020, you must submit all subsequent reports to the EPA via CEDRI, which can be accessed through the EPA's CDX (*https://cdx.epa.gov/*). You must use the appropriate electronic report template on the CEDRI website (*https://www.epa.gov/electronic-reporting-air-emissions/compliance-and-emissions-data-reporting-interface-cedri*) for this subpart. The report must be submitted by the deadline specified in this subpart, regardless of the method in which the report is submitted. If you claim some of the information required to be submitted via CEDRI is CBI, submit a complete report, including information claimed to be CBI, to the EPA. The report must be generated using the appropriate form on the CEDRI website or an alternate electronic file consistent with the XML schema listed on the CEDRI website. Submit the file on a compact disc, flash drive, or other commonly used electronic storage medium and clearly mark the medium as CBI. Mail the electronic medium to U.S. EPA/OAQPS/CORE CBI Office, Attention: Group Leader, Measurement Policy Group, MD C404–02, 4930 Old Page Rd., Durham, NC 27703. The same file with the CBI omitted must be submitted to the EPA via the EPA's CDX as described earlier in this paragraph (d).

(e) If you are required to electronically submit a report through CEDRI in the EPA's CDX, you may assert a claim of EPA system outage for failure to timely comply with the reporting

sfrattini on LAPJZKW1R2 with $$_JOB
VerDate Sep<11>2014 09:16 Apr 04, 2023 Jkt 256165 PO 00000 Frm 01239 Fmt 8010 Sfmt 8010 Q:\40\256165.XXX PC31

requirement. To assert a claim of EPA system outage, you must meet the requirements outlined in paragraphs (e)(1) through (7) of this section.

(1) You must have been or will be precluded from accessing CEDRI and submitting a required report within the time prescribed due to an outage of either the EPA's CEDRI or CDX systems.

(2) The outage must have occurred within the period of time beginning five business days prior to the date that the submission is due.

(3) The outage may be planned or unplanned.

(4) You must submit notification to the Administrator in writing as soon as possible following the date you first knew, or through due diligence should have known, that the event may cause or has caused a delay in reporting.

(5) You must provide to the Administrator a written description identifying:

(i) The date(s) and time(s) when CDX or CEDRI was accessed and the system was unavailable;

(ii) A rationale for attributing the delay in reporting beyond the regulatory deadline to EPA system outage;

(iii) Measures taken or to be taken to minimize the delay in reporting; and

(iv) The date by which you propose to report, or if you have already met the reporting requirement at the time of the notification, the date you reported.

(6) The decision to accept the claim of EPA system outage and allow an extension to the reporting deadline is solely within the discretion of the Administrator.

(7) In any circumstance, the report must be submitted electronically as soon as possible after the outage is resolved.

(f) If you are required to electronically submit a report through CEDRI in the EPA's CDX, you may assert a claim of force majeure for failure to timely comply with the reporting requirement. To assert a claim of force majeure, you must meet the requirements outlined in paragraphs (f)(1) through (5) of this section.

(1) You may submit a claim if a force majeure event is about to occur, occurs, or has occurred or there are lingering effects from such an event within the period of time beginning five business days prior to the date the submission is due. For the purposes of this section, a force majeure event is defined as an event that will be or has been caused by circumstances beyond the control of the affected facility, its contractors, or any entity controlled by the affected facility that prevents you from complying with the requirement to submit a report electronically within the time period prescribed. Examples of such events are acts of nature (*e.g.*, hurricanes, earthquakes, or floods), acts of war or terrorism, or equipment failure or safety hazard beyond the control of the affected facility (*e.g.*, large scale power outage).

(2) You must submit notification to the Administrator in writing as soon as possible following the date you first knew, or through due diligence should have known, that the event may cause or has caused a delay in reporting.

(3) You must provide to the Administrator:

(i) A written description of the force majeure event;

(ii) A rationale for attributing the delay in reporting beyond the regulatory deadline to the force majeure event;

(iii) A description of measures taken or to be taken to minimize the delay in reporting; and

(iv) The date by which you propose to report, or if you have already met the reporting requirement at the time of the notification, the date you reported.

(4) The decision to accept the claim of force majeure and allow an extension to the reporting deadline is solely within the discretion of the Administrator.

(5) In any circumstance, the reporting must occur as soon as possible after the force majeure event occurs.

[85 FR 15976, Mar. 20, 2020]

§ 63.5915 What records must I keep?

(a) You must keep the records listed in paragraphs (a)(1) through (3) of this section.

(1) A copy of each notification and report that you submitted to comply with this subpart, including all documentation supporting any Initial Notification or Notification of Compliance Status that you submitted, according to the requirements in § 63.10(b)(2)(xiv).

sfrattini on LAPJZKW1R2 with $$_JOB
VerDate Sep<11>2014 09:16 Apr 04, 2023 Jkt 256165 PO 00000 Frm 01240 Fmt 8010 Sfmt 8010 Q:\40\256165.XXX PC31

(2) [Reserved]

(3) Records of performance tests, design, and performance evaluations as required in § 63.10(b)(2).

(b) If you use an add-on control device, you must keep all records required in 40 CFR part 63, subpart SS, to show continuous compliance with this subpart.

(c) You must keep all data, assumptions, and calculations used to determine organic HAP emissions factors or average organic HAP contents for operations listed in tables 3, 5, and 7 to this subpart.

(d) You must keep a certified statement that you are in compliance with the work practice requirements in Table 4 to this subpart, as applicable.

(e) For a new or existing continuous lamination/ casting operation, you must keep the records listed in paragraphs (e)(1) through (4) of this section, when complying with the percent reduction and/or lbs/ton requirements specified in paragraphs (a) and (c) through (d) of § 63.5805.

(1) You must keep all data, assumptions, and calculations used to determine percent reduction and/or lbs/ton as applicable;

(2) You must keep a brief description of the rationale for the assignment of an equation or factor to each formula;

(3) When using facility-specific organic HAP emissions estimation equations or factors, you must keep all data, assumptions, and calculations used to derive the organic HAP emissions estimation equations and factors and identification and rationale for the worst-case formula; and

(4) For all organic HAP emissions estimation equations and organic HAP emissions factors, you must keep documentation that the appropriate permitting authority has approved them.

[68 FR 19402, Apr. 21, 2003, as amended at 70 FR 50129, Aug. 25, 2005; 85 FR 15977, Mar. 20, 2020]

§ 63.5920 In what form and how long must I keep my records?

(a) You must maintain all applicable records in such a manner that they can be readily accessed and are suitable for inspection according to § 63.10(b)(1).

(b) As specified in § 63.10(b)(1), you must keep each record for 5 years following the date of each occurrence, measurement, maintenance, corrective action, report, or record.

(c) You must keep each record onsite for at least 2 years after the date of each occurrence, measurement, maintenance, corrective action, report, or record, according to § 63.10(b)(1). You can keep the records offsite for the remaining 3 years.

(d) You may keep records in hard copy or computer readable form including, but not limited to, paper, microfilm, computer floppy disk, magnetic tape, or microfiche.

(e) Any records required to be maintained by this part that are submitted electronically via the EPA's CEDRI may be maintained in electronic format. This ability to maintain electronic copies does not affect the requirement for facilities to make records, data, and reports available upon request to a delegated air agency or the EPA as part of an on-site compliance evaluation.

[68 FR 19402, Apr. 21, 2003, as amended at 85 FR 15977, Mar. 20, 2020]

OTHER REQUIREMENTS AND INFORMATION

§ 63.5925 What parts of the General Provisions apply to me?

Table 15 to this subpart shows which parts of the General Provisions in §§ 63.1 through 63.15 apply to you.

§ 63.5930 Who implements and enforces this subpart?

(a) This subpart can be administered by us, the EPA, or a delegated authority such as your State, local, or tribal agency. If the EPA Administrator has delegated authority to your State, local, or tribal agency, then that agency has the authority to administer and enforce this subpart. You should contact your EPA Regional Office to find out if this subpart is delegated to your State, local, or tribal agency.

(b) In delegating implementation and enforcement authority of this subpart to a State, local, or tribal agency under 40 CFR part 63, subpart E, the authorities contained in paragraph (c) of this section are not delegated.

(c) The authorities that will not be delegated to State, local, or tribal

sfrattini on LAPJZKW1R2 with $$_JOB
VerDate Sep<11>2014 09:16 Apr 04, 2023 Jkt 256165 PO 00000 Frm 01241 Fmt 8010 Sfmt 8010 Q:\40\256165.XXX PC31

agencies are listed in paragraphs (c)(1) through (4) of this section:

(1) Approval of alternatives to the organic HAP emissions standards in § 63.5805 under § 63.6(g).

(2) Approval of major changes to test methods under § 63.7(e)(2)(ii) and (f) and as defined in § 63.90.

(3) Approval of major changes to monitoring under § 63.8(f) and as defined in § 63.90.

(4) Approval of major changes to recordkeeping and reporting under § 63.10(f) and as defined in § 63.90.

§ 63.5935 What definitions apply to this subpart?

Terms used in this subpart are defined in the CAA, in 40 CFR 63.2, and in this section as follows:

Atomized mechanical application means application of resin or gel coat with spray equipment that separates the liquid into a fine mist. This fine mist may be created by forcing the liquid under high pressure through an elliptical orifice, bombarding a liquid stream with directed air jets, or a combination of these techniques.

Bulk molding compound (BMC) means a putty-like molding compound containing resin(s) in a form that is ready to mold. In addition to resins, BMC may contain catalysts, fillers, and reinforcements. Bulk molding compound can be used in compression molding and injection molding operations to manufacture reinforced plastic composites products.

BMC manufacturing means a process that involves the preparation of BMC.

Centrifugal casting means a process for fabricating cylindrical composites, such as pipes, in which composite materials are positioned inside a rotating hollow mandrel and held in place by centrifugal forces until the part is sufficiently cured to maintain its physical shape.

Charge means the amount of SMC or BMC that is placed into a compression or injection mold necessary to complete one mold cycle.

Cleaning means removal of composite materials, such as cured and uncured resin from equipment, finished surfaces, floors, hands of employees, or any other surfaces.

Clear production gel coat means an unpigmented, quick-setting resin used to improve the surface appearance and/or performance of composites. It can be used to form the surface layer of any composites other than those used for molds in tooling operations.

Closed molding means a grouping of processes for fabricating composites in a way that HAP-containing materials are not exposed to the atmosphere except during the material loading stage (*e.g.*, compression molding, injection molding, and resin transfer molding). Processes where the mold is covered with plastic (or equivalent material) prior to resin application, and the resin is injected into the covered mold are also considered closed molding.

Composite means a shaped and cured part produced by using composite materials.

Composite materials means the raw materials used to make composites. The raw materials include styrene containing resins. They may also include gel coat, monomer, catalyst, pigment, filler, and reinforcement.

Compression molding means a closed molding process for fabricating composites in which composite materials are placed inside matched dies that are used to cure the materials under heat and pressure without exposure to the atmosphere. The addition of mold paste or in-mold coating is considered part of the closed molding process. The composite materials used in this process are generally SMC or BMC.

Compression/injection molding means a grouping of processes that involves the use of compression molding and/or injection molding.

Continuous casting means a continuous process for fabricating composites in which composite materials are placed on an in-line conveyor belt to produce cast sheets that are cured in an oven.

Continuous lamination means a continuous process for fabricating composites in which composite materials are typically sandwiched between plastic films, pulled through compaction rollers, and cured in an oven. This process is generally used to produce flat or corrugated products on an in-line conveyor.

sfrattini on LAPJZKW1R2 with $$_JOB
VerDate Sep<11>2014 09:16 Apr 04, 2023 Jkt 256165 PO 00000 Frm 01242 Fmt 8010 Sfmt 8010 Q:\40\256165.XXX PC31

Continuous lamination/casting means a grouping of processes that involves the use of continuous lamination and/or continuous casting.

Controlled emissions means those organic HAP emissions that are vented from a control device to the atmosphere.

Corrosion-resistant gel coat means a gel coat used on a product made with a corrosion-resistant resin that has a corrosion-resistant end-use application.

Corrosion-resistant end-use applications means applications where the product is manufactured specifically for an application that requires a level of chemical inertness or resistance to chemical attack above that required for typical reinforced plastic composites products. These applications include, but are not limited to, chemical processing and storage; pulp and paper production; sewer and wastewater treatment; power generation; potable water transfer and storage; food and drug processing; pollution or odor control; metals production and plating; semiconductor manufacturing; petroleum production, refining, and storage; mining; textile production; nuclear materials storage; swimming pools; and cosmetic production, as well as end-use applications that require high strength resins.

Corrosion-resistant industry standard includes the following standards: ASME RTP–1 or Sect. X; ASTM D5364, D3299, D4097, D2996, D2997, D3262, D3517, D3754, D3840, D4024, D4160, D4161, D4162, D4184, D3982, or D3839; ANSI/AWWA C950; UL 215, 1316 or 1746, IAPMO PS–199, or written customer requirements for resistance to specified chemical environments.

Corrosion-resistant product means a product made with a corrosion-resistant resin and is manufactured to a corrosion-resistant industry standard, or a food contact industry standard, or is manufactured for corrosion-resistant end-use applications involving continuous or temporary chemical exposures.

Corrosion-resistant resin means a resin that either:

(1) Displays substantial retention of mechanical properties when undergoing ASTM C–581 coupon testing, where the resin is exposed for 6 months or more to one of the following materials: Material with a pH ≥2.0 or ≤3.0, oxidizing or reducing agents, organic solvents, or fuels or additives as defined in 40 CFR 79.2. In the coupon testing, the exposed resin needs to demonstrate a minimum of 50 percent retention of the relevant mechanical property compared to the same resin in unexposed condition. In addition, the exposed resin needs to demonstrate an increased retention of the relevant mechanical property of at least 20 percentage points when compared to a similarly exposed general-purpose resin. For example, if the general-purpose resin retains 45 percent of the relevant property when tested as specified above, then a corrosion-resistant resin needs to retain at least 65 percent (45 percent plus 20 percent) of its property. The general-purpose resin used in the test needs to have an average molecular weight of greater than 1,000, be formulated with a 1:2 ratio of maleic anhydride to phthalic anhydride and 100 percent diethylene glycol, and a styrene content between 43 to 48 percent; or

(2) Complies with industry standards that require specific exposure testing to corrosive media, such as UL 1316, UL 1746, or ASTM F–1216.

Deviation after September 16, 2020, means any instance in which an affected source subject to this subpart, or an owner or operator of such a source:

(1) Fails to meet any requirement or obligation established by this subpart, including, but not limited to, any emission limit, operating limit, or work practice standard; or

(2) Fails to meet any term or condition that is adopted to implement an applicable requirement in this subpart and that is included in the operating permit for any affected source required to obtain such a permit.

Deviation before September 17, 2020, means any instance in which an affected source subject to this subpart, or an owner or operator of such a source:

(1) Fails to meet any requirement or obligation established by this subpart, including, but not limited to, any emission limit, operating limit, or work practice standard; or

sfrattini on LAPJZKW1R2 with $$_JOB
VerDate Sep<11>2014 09:16 Apr 04, 2023 Jkt 256165 PO 00000 Frm 01243 Fmt 8010 Sfmt 8010 Q:\40\256165.XXX PC31

(2) Fails to meet any term or condition that is adopted to implement an applicable requirement in this subpart and that is included in the operating permit for any affected source required to obtain such a permit; or

(3) Fails to meet any emission limit, or operating limit, or work practice standard in this subpart during start-up, shutdown, or malfunction, regardless of whether or not such failure is permitted by this subpart.

Doctor box means the box or trough on an SMC machine into which the liquid resin paste is delivered before it is metered onto the carrier film.

Filament application means an open molding process for fabricating composites in which reinforcements are fed through a resin bath and wound onto a rotating mandrel. The materials on the mandrel may be rolled out or worked by using nonmechanical tools prior to curing. Resin application to the reinforcement on the mandrel by means other than the resin bath, such as spray guns, pressure-fed rollers, flow coaters, or brushes is not considered filament application.

Filled Resin means that fillers have been added to a resin such that the amount of inert substances is at least 10 percent by weight of the total resin plus filler mixture. Filler putty made from a resin is considered a filled resin.

Fillers means inert substances dispersed throughout a resin, such as calcium carbonate, alumina trihydrate, hydrous aluminum silicate, mica, feldspar, wollastonite, silica, and talc. Materials that are not considered to be fillers are glass fibers or any type of reinforcement and microspheres.

Fire retardant gel coat means a gel coat used for products for which low-flame spread/low-smoke resin is used.

Fluid impingement technology means a spray gun that produces an expanding non-misting curtain of liquid by the impingement of low-pressure uninterrupted liquid streams.

Food contact industry standard means a standard related to food contact application contained in Food and Drug Administration's regulations at 21 CFR 177.2420.

Gel Coat means a quick-setting resin used to improve surface appearance and/or performance of composites. It can be used to form the surface layer of any composites other than those used for molds in tooling operations.

Gel coat application means a process where either clear production, pigmented production, white/off-white or tooling gel coat is applied.

HAP-containing materials storage means an ancillary process which involves keeping HAP-containing materials, such as resins, gel coats, catalysts, monomers, and cleaners, in containers or bulk storage tanks for any length of time. Containers may include small tanks, totes, vessels, and buckets.

High Performance gel coat means a gel coat used on products for which National Sanitation Foundation, United States Department of Agriculture, ASTM, durability, or other property testing is required.

High strength gel coat means a gel coat applied to a product that requires high strength resin.

High strength resins means polyester resins which have a casting tensile strength of 10,000 pounds per square inch or more and which are used for manufacturing products that have high strength requirements such as structural members and utility poles.

Injection molding means a closed molding process for fabricating composites in which composite materials are injected under pressure into a heated mold cavity that represents the exact shape of the product. The composite materials are cured in the heated mold cavity.

Low Flame Spread/Low Smoke Products means products that meet the following requirements. The products must meet both the applicable flame spread requirements and the applicable smoke requirements. Interior or exterior building application products must meet an ASTM E–84 Flame Spread Index of less than or equal to 25, and Smoke Developed Index of less than or equal to 450, or pass National Fire Protection Association 286 Room Corner Burn Test with no flash over and total smoke released not exceeding 1000 meters square. Mass transit application products must meet an ASTM E–162 Flame Spread Index of less than or equal to 35 and ASTM E662 Smoke Density Ds @ 1.5 minutes less than or equal

sfrattini on LAPJZKW1R2 with $$_JOB
VerDate Sep<11>2014 09:16 Apr 04, 2023 Jkt 256165 PO 00000 Frm 01244 Fmt 8010 Sfmt 8010 Q:\40\256165.XXX PC31

to 100 and Ds @ 4 minutes less than to equal to 200. Duct application products must meet ASTM E084 Flame Spread Index less than or equal to 25 and Smoke Developed Index less than or equal to 50 on the interior and/or exterior of the duct.

Manual resin application means an open molding process for fabricating composites in which composite materials are applied to the mold by pouring or by using hands and nonmechanical tools, such as brushes and rollers. Materials are rolled out or worked by using nonmechanical tools prior to curing. The use of pressure-fed rollers and flow coaters to apply resin is not considered manual resin application.

Mechanical resin application means an open molding process for fabricating composites in which composite materials (except gel coat) are applied to the mold by using mechanical tools such as spray guns, pressure-fed rollers, and flow coaters. Materials are rolled out or worked by using nonmechanical tools prior to curing.

Mixing means the blending or agitation of any HAP-containing materials in vessels that are 5.00 gallons (18.9 liters) or larger, and includes the mixing of putties or polyputties. Mixing may involve the blending of resin, gel coat, filler, reinforcement, pigments, catalysts, monomers, and any other additives.

Mold means a cavity or matrix into or onto which the composite materials are placed and from which the product takes its form.

Neat gel coat means the resin as purchased for the supplier, but not including any inert fillers.

Neat gel coat plus means neat gel coat plus any organic HAP-containing materials that are added to the gel coat by the supplier or the facility, excluding catalysts and promoters. Neat gel coat plus does include any additions of styrene or methyl methacrylate monomer in any form, including in catalysts and promoters.

Neat resin means the resin as purchased from the supplier, but not including any inert fillers.

Neat resin plus means neat resin plus any organic HAP-containing materials that are added to the resin by the supplier or the facility. Neat resin plus does not include any added filler, reinforcements, catalysts, or promoters. Neat resin plus does include any additions of styrene or methyl methacrylate monomer in any form, including in catalysts and promoters.

Nonatomized mechanical application means the use of application tools other than brushes to apply resin and gel coat where the application tool has documentation provided by its manufacturer or user that this design of the application tool has been organic HAP emissions tested, and the test results showed that use of this application tool results in organic HAP emissions that are no greater than the organic HAP emissions predicted by the applicable nonatomized application equation(s) in Table 1 to this subpart. In addition, the device must be operated according to the manufacturer's directions, including instructions to prevent the operation of the device at excessive spray pressures. Examples of nonatomized application include flow coaters, pressure fed rollers, and fluid impingement spray guns.

Noncorrosion-resistant resin means any resin other than a corrosion-resistant resin or a tooling resin.

Noncorrosion-resistant product means any product other than a corrosion-resistant product or a mold.

Non-routine manufacture means that you manufacture parts to replace worn or damaged parts of a reinforced plastic composites product, or a product containing reinforced plastic composite parts, that was originally manufactured in another facility. For a part to qualify as non-routine manufacture, it must be used for repair or replacement, and the manufacturing schedule must be based on the current or anticipated repair needs of the reinforced plastic composites product, or a product containing reinforced plastic composite parts.

Operation means a specific process typically found at a reinforced plastic composites facility. Examples of operations are noncorrosion-resistant manual resin application, corrosion-resistant mechanical resin application, pigmented gel coat application, mixing and HAP-containing materials storage.

Operation group means a grouping of individual operations based primarily

sfrattini on LAPJZKW1R2 with $$_JOB
VerDate Sep<11>2014 09:16 Apr 04, 2023 Jkt 256165 PO 00000 Frm 01245 Fmt 8010 Sfmt 8010 Q:\40\256165.XXX PC31

on mold type. Examples are open molding, closed molding, and centrifugal casting.

Open molding means a process for fabricating composites in a way that HAP-containing materials are exposed to the atmosphere. Open molding includes processes such as manual resin application, mechanical resin application, filament application, and gel coat application. Open molding also includes application of resins and gel coats to parts that have been removed from the open mold.

Pigmented gel coat means a gel coat that has a color, but does not contain 10 percent of more titanium dioxide by weight. It can be used to form the surface layer of any composites other than those used for molds in tooling operations.

Polymer casting means a process for fabricating composites in which composite materials are ejected from a casting machine or poured into an open, partially open, or closed mold and cured. After the composite materials are poured into the mold, they are not rolled out or worked while the mold is open, except for smoothing the material and/or vibrating the mold to remove bubbles. The composite materials may or may not include reinforcements. Products produced by the polymer casting process include cultured marble products and polymer concrete.

Preform Injection means a form of pultrusion where liquid resin is injected to saturate reinforcements in an enclosed system containing one or more chambers with openings only large enough to admit reinforcements. Resin, which drips out of the chamber(s) during the process, is collected in closed piping or covered troughs and then into a covered reservoir for recycle. Resin storage vessels, reservoirs, transfer systems, and collection systems are covered or shielded from the ambient air. Preform injection differs from direct die injection in that the injection chambers are not directly attached to the die.

Prepreg materials means reinforcing fabric received precoated with resin which is usually cured through the addition of heat.

Pultrusion means a continuous process for manufacturing composites that have a uniform cross-sectional shape. The process consists of pulling a fiber-reinforcing material through a resin impregnation chamber or bath and through a shaping die, where the resin is subsequently cured. There are several types of pultrusion equipment, such as open bath, resin injection, and direct die injection equipment.

Repair means application of resin or gel coat to a part to correct a defect, where the resin or gel coat application occurs after the part has gone through all the steps of its typical production process, or the application occurs outside the normal production area. For purposes of this subpart, rerouting a part back through the normal production line, or part of the normal production line, is not considered repair.

Resin transfer molding means a process for manufacturing composites whereby catalyzed resin is transferred or injected into a closed mold in which fiberglass reinforcement has been placed.

Sheet molding compound (SMC) means a ready-to-mold putty-like molding compound that contains resin(s) processed into sheet form. The molding compound is sandwiched between a top and a bottom film. In addition to resin(s), it may also contain catalysts, fillers, chemical thickeners, mold release agents, reinforcements, and other ingredients. Sheet molding compound can be used in compression molding to manufacture reinforced plastic composites products.

Shrinkage controlled resin means a resin that when promoted, catalyzed, and filled according to the resin manufacturer's recommendations demonstrates less than 0.3 percent linear shrinkage when tested according to ASTM D2566.

Shutdown after September 16, 2020, means the cessation of operation of the add-on control devices.

SMC manufacturing means a process which involves the preparation of SMC.

Startup after September 17, 2020, means the setting in operation of the add-on control devices.

Tooling gel coat means a gel coat that is used to form the surface layer of molds. Tooling gel coats generally

sfrattini on LAPJZKW1R2 with $$_JOB
VerDate Sep<11>2014 09:16 Apr 04, 2023 Jkt 256165 PO 00000 Frm 01246 Fmt 8010 Sfmt 8010 Q:\40\256165.XXX PC31

have high heat distortion temperatures, low shrinkage, high barcol hardness, and high dimensional stability.

Tooling resin means a resin that is used to produce molds. Tooling resins generally have high heat distortion temperatures, low shrinkage, high barcol hardness, and high dimensional stability.

Uncontrolled oven organic HAP emissions means those organic HAP emissions emitted from the oven through closed vent systems to the atmosphere and not to a control device. These organic HAP emissions do not include organic HAP emissions that may escape into the workplace through the opening of panels or doors on the ovens or other similar fugitive organic HAP emissions in the workplace.

Uncontrolled wet-out area organic HAP emissions means any or all of the following: Organic HAP emissions from wet-out areas that do not have any capture and control, organic HAP emissions that escape from wet-out area enclosures, and organic HAP emissions from wet-out areas that are captured by an enclosure but are vented to the atmosphere and not to an add-on control device.

Unfilled means that there has been no addition of fillers to a resin or that less than 10 percent of fillers by weight of the total resin plus filler mixture has been added.

Vapor suppressant means an additive, typically a wax, that migrates to the surface of the resin during curing and forms a barrier to seal in the styrene and reduce styrene emissions.

Vapor-suppressed resin means a resin containing a vapor suppressant added for the purpose of reducing styrene emissions during curing.

White and off-white gel coat means a gel coat that contains 10 percent of more titanium dioxide by weight.

[68 FR 19402, Apr. 21, 2003, as amended at 70 FR 50129, Aug. 25, 2005; 85 FR 15977, Mar. 20, 2020]

sfrattini on LAPJZKW1R2 with $$_JOB
VerDate Sep<11>2014 09:16 Apr 04, 2023 Jkt 256165 PO 00000 Frm 01247 Fmt 8010 Sfmt 8010 Q:\40\256165.XXX PC31

TABLE 1 TO SUBPART WWWW OF PART 63—EQUATIONS TO CALCULATE ORGANIC HAP EMISSIONS FACTORS FOR SPECIFIC OPEN MOLDING AND CENTRIFUGAL CASTING PROCESS STREAMS

Table 1 to Subpart WWWW of Part 63--Equations to Calculate Organic HAP Emissions Factors for Specific Open Molding and Centrifugal Casting Process Streams[1]

As specified in §63.5810, use the equations in the following table to calculate organic HAP emissions factors for specific open molding and centrifugal casting process streams:

If your operation type is a new or existing...	And you use...	With...	Use this organic HAP Emissions Factor (EF) Equation for materials with less than 33 percent organic HAP (19 percent organic HAP for nonatomized gel coat)[2,3,4]...	Use this organic HAP emissions Factor (EF) Equation for materials with 33 percent or more organic HAP (19 percent for nonatomized gel coat)[2,3,4]...
1. open molding operation	a. manual resin application	i. nonvapor-suppressed resin	EF = 0.126 x %HAP x 2000	EF = ((0.286 x %HAP)-0.0529) x 2000
		ii. vapor-suppressed resin	EF = 0.126 x %HAP x 2000 x (1-(0.5 x VSE factor))	EF = ((0.286 x %HAP)-0.0529) x 2000 x (1-(0.5 x VSE factor))
		iii. vacuum bagging/closed-mold curing with roll out	EF = 0.126 x %HAP x 2000 x 0.8	EF = ((0.286 x %HAP)-0.0529) x 2000 x 0.8
		iv. vacuum bagging/closed-mold curing without roll-out	EF = (0.126 x %HAP x 2000 x 0.5	EF = ((0.286 x %HAP)-0.0529) x 2000 x 0.5
	b. atomized mechanical resin application	i. nonvapor-suppressed resin	EF = 0.169 x %HAP x 2000	EF = ((0.714 x %HAP)-0.18) x 2000
		ii. vapor-suppressed resin	EF = 0.169 x %HAP x 2000 x (1-(0.45 x VSE factor))	EF = ((0.714 x %HAP)-0.18) x 2000 x (1-(0.45 x VSE factor))
		iii. vacuum bagging/closed-mold curing with roll-out	EF = 0.169 x %HAP x 2000 x 0.85	EF = ((0.714 x %HAP)-0.18) x 2000 x 0.85
		iv. vacuum bagging/closed-mold curing without roll-out	EF = 0.169 x %HAP x 2000 x 0.55	EF = ((0.714 x %HAP)-0.18) x 2000 x 0.55
	c. nonatomized mechanical resin application	i. nonvapor-suppressed resin	EF = 0.107 x %HAP x 2000	EF = ((0.157 x %HAP)-0.0165) x 2000
		ii. vapor-suppressed resin	EF = 0.107 x %HAP x 2000 x (1-(0.45 x VSE factor))	EF = ((0.157 x %HAP)-0.0165) x 2000 x (1-(0.45 x VSE factor))
		iii. closed-mold curing with roll-out	EF = 0.107 x %HAP x 2000 x 0.85	EF = ((0.157 x %HAP)-0.0165) x 2000 x 0.85
		iv. vacuum bagging/closed-mold curing without roll-out	EF = 0.107 x %HAP x 2000 x 0.55	EF = ((0.157 x %HAP)-0.0165) x 2000 x 0.55
	d. atomized mechanical resin application with robotic or automated spray control[5]	nonvapor-suppressed resin	EF = 0.169 x %HAP x 2000 x 0.77	EF = 0.77 x ((0.714 x %HAP)-0.18) x 2000
	e. filament application[6]	i. nonvapor-suppressed resin	EF = 0.184 x %HAP x 2000	EF = ((0.2746 x %HAP)-0.0298) x 2000
		ii. vapor-suppressed resin	EF = 0.12 x %HAP x 2000	EF = ((0.2746 x %HAP)-0.0298) x 2000 x 0.65
	f. atomized spray gel coat application	nonvapor-suppressed gel coat	EF = 0.445 x %HAP x 2000	EF = ((1.03646 x %HAP)-0.195) x 2000

sfrattini on LAPJZKW1R2 with $$_JOB
VerDate Sep<11>2014 09:16 Apr 04, 2023 Jkt 256165 PO 00000 Frm 01248 Fmt 8010 Sfmt 8006 Q:\40\256165.XXX PC31
ER25AU05.020</GPH>

	g. nonatomized spray gel coat application	nonvapor-suppressed gel coat	EF = 0.185 x %HAP x 2000	EF = ((0.4506 x %HAP)-0.0505) x 2000
	h. atomized spray gel coat application using robotic or automated spray	nonvapor-suppressed gel coat	EF = 0.445 x %HAP x 2000 x 0.73	EF = ((1.03646 x %HAP)-0.195) x 2000 x 0.73
2. centrifugal casting operations [7,8]	a. heated air blown through molds	nonvapor-suppressed resin	EF = 0.558 x (%HAP) x 2000	EF = 0.558 x (%HAP) x 2000
	b. vented molds, but air vented through the molds is not heated	nonvapor-suppressed resin	EF = 0.026 x (%HAP) x 2000	EF = 0.026 x (%HAP) x 2000

Footnotes to Table 1

[1] The equations in this table are intended for use in calculating emission factors to demonstrate compliance with the emission limits in subpart WWWW. These equations may not be the most appropriate method to calculate emission estimates for other purposes. However, this does not preclude a facilit from using the equations in this table to calculate emission factors for purposes other then rule compliance if these equations are the most accurate available.

[2] To obtain the organic HAP emissions factor value for an operation with an add-on control device multiply the EF above by the add-on control factor calculated using Equation 1 of §63.5810. The organic HAP emissions factors have units of lbs of organic HAP per ton of resin or gel coat applied.

[3] Percent HAP means total weight percent of organic HAP (styrene, methyl methacrylate, and any other organic HAP) in the resin or gel coat prior to the addition of fillers, catalyst, and promoters. Input the percent HAP as a decimal, i.e., 33 percent HAP should be input as 0.33, not 33.

[4] The VSE factor means the percent reduction in organic HAP emissions expressed as a decimal measured by the VSE test method of appendix A to this subpart.

[5] This equation is based on a organic HAP emissions factor equation developed for mechanical atomized controlled spray. It may only be used for automated or robotic spray systems with atomized spray. All spray operations using hand held spray guns must use the appropriate mechanical atomized or mechanical nonatomized organic HAP emissions factor equation. Automated or robotic spray systems using nonatomized spray should use the appropriate nonatomized mechanical resin application equation.

[6] Applies only to filament application using an open resin bath. If resin is applied manually or with a spray gun, use the appropriate manual or mechanical application organic HAP emissions factor equation.

[7] These equations are for centrifugal casting operations where the mold is vented during spinning. Centrifugal casting operations where the mold is completely sealed after resin injection are considered to be closed molding operations.

[8] If a centrifugal casting operation uses mechanical or manual resin application techniques to apply resin to an open centrifugal casting mold, use the appropriate open molding equation with covered cure and no rollout to determine an emission factor for operations prior to the closing of the centrifugal casting mold. If the closed centrifugal casting mold is vented during spinning, use the appropriate centrifugal casting equation to calculate an emission factor for the portion of the process where spinning and cure occur. If a centrifugal casting operation uses mechanical or manual resin application techniques to apply resin to an open centrifugal casting mold, and the mold is then closed and is not vented, treat the entire operation as open molding with covered cure and no rollout to determine emission factors.

[70 FR 50129, Aug. 26, 2005]

sfrattini on LAPJZKW1R2 with $$_JOB

VerDate Sep<11>2014 09:16 Apr 04, 2023 Jkt 256165 PO 00000 Frm 01249 Fmt 8010 Sfmt 8002 Q:\40\256165.XXX PC31

ER25AU05.021</GPH>

TABLE 2 TO SUBPART WWWW OF PART 63—COMPLIANCE DATES FOR NEW AND EXISTING REINFORCED PLASTIC COMPOSITES FACILITIES

As required in §§ 63.5800 and 63.5840 you must demonstrate compliance with the standards by the dates in the following table:

If your facility is . . .	And . . .	Then you must comply by this date . . .
1. An existing source	a. Is a major source on or before the publication date of this subpart.	April 21, 2006.
2. An existing source that is an area source.	Becomes a major source after the publication date of this subpart.	3 years after becoming a major source or April 21, 2006, whichever is later.
3. An existing source, and emits less than 100 tpy of organic HAP from the combination of all centrifugal casting and continuous lamination/casting operations at the time of initial compliance with this subpart.	Subsequently increases its actual organic HAP emissions to 100 tpy or more from these operations, which requires that the facility must now comply with the standards in § 63.5805(b).	3 years of the date your semi-annual compliance report indicates your facility meets or exceeds the 100 tpy threshold.
4. A new source	Is a major source at startup	Upon startup or April 21, 2003, whichever is later.
5. A new source	Is an area source at startup and becomes a major source.	Immediately upon becoming a major source.
6. A new source, and emits less than 100 tpy of organic HAP from the combination of all open molding, centrifugal casting, continuous lamination/casting, pultrusion, SMC and BMC manufacturing, and mixing operations at the time of initial compliance with this subpart.	Subsequently increases its actual organic HAP emissions to 100 tpy or more from the combination of these operations, which requires that the facility must now meet the standards in § 63.5805(d).	3 years from the date that your semi-annual compliance report indicates your facility meets or exceeds the 100 tpy threshold.

[68 FR 19402, Apr. 21, 2003, as amended at 85 FR 73910, Nov. 19, 2020]

TABLE 3 TO SUBPART WWWW OF PART 63—ORGANIC HAP EMISSIONS LIMITS FOR EXISTING OPEN MOLDING SOURCES, NEW OPEN MOLDING SOURCES EMITTING LESS THAN 100 TPY OF HAP, AND NEW AND EXISTING CENTRIFUGAL CASTING AND CONTINUOUS LAMINATION/CASTING SOURCES THAT EMIT LESS THAN 100 TPY OF HAP

As specified in § 63.5805, you must meet the following organic HAP emissions limits that apply to you:

If your operation type is . . .	And you use . . .	[1] Your organic HAP emissions limit is . . .
1. open molding—corrosion-resistant and/or high strength (CR/HS).	a. mechanical resin application b. filament application c. manual resin application	113 lb/ton. 171 lb/ton. 123 lb/ton.
2. open molding—non-CR/HS	a. mechanical resin application b. filament application c. manual resin application	88 lb/ton. 188 lb/ton. 87 lb/ton.
3. open molding—tooling	a. mechanical resin application b. manual resin application	254 lb/ton. 157 lb/ton.
4. open molding—low-flame spread/low-smoke products.	a. mechanical resin application b. filament application c. manual resin application	497 lb/ton. 270 lb/ton. 238 lb/ton.
5. open molding—shrinkage controlled resins [2].	a. mechanical resin application b. filament application c. manual resin application	354 lb/ton. 215 lb/ton. 180 lb/ton.
6. open molding—gel coat [3]	a. tooling gel coating b. white/off white pigmented gel coating c. all other pigmented gel coating d. CR/HS or high performance gel coat e. fire retardant gel coat f. clear production gel coat	440 lb/ton. 267 lb/ton. 377 lb/ton. 605 lb/ton. 854 lb/ton. 522 lb/ton.

sfrattini on LAPJZKW1R2 with $$_JOB
VerDate Sep<11>2014 09:16 Apr 04, 2023 Jkt 256165 PO 00000 Frm 01250 Fmt 8010 Sfmt 8002 Q:\40\256165.XXX PC31

If your operation type is . . .	And you use . . .	[1] Your organic HAP emissions limit is . . .
7. centrifugal casting—CR/HS	a. resin application with the mold closed, and the mold is vented during spinning and cure. b. resin application with the mold closed, and the mold is not vented during spinning and cure. c. resin application with the mold open, and the mold is vented during spinning and cure. d. resin application with the mold open, and the mold is not vented during spinning and cure.	25 lb/ton.[4] NA—this is considered to be a closed molding operation. 25 lb/ton.[4] Use the appropriate open molding emission limit.[5]
8. centrifugal casting—non-CR/HS	a. resin application with the mold closed, and the mold is vented during spinning and cure. b. resin application with the mold closed, and mold is not vented during the spinning and cure. c. resin application with the mold open, and the mold is vented during spinning and cure. d. resin application with the mold open, and the mold is not vented during spinning and cure.	20 lb/ton.[4] NA—this is considered to be a closed molding operation. 20 lb/ton.[4] Use the appropriate open molding emission limit.[5]
9. pultrusion [6]	N/A	reduce total organic HAP emissions by at least 60 weight percent.
10. continuous lamination/casting	N/A	reduce total organic HAP emissions by at least 58.5 weight percent or not exceed an organic HAP emissions limit of 15.7 lbs of organic HAP per ton of neat resin plus and neat gel coat plus.

[1] Organic HAP emissions limits for open molding and centrifugal casting are expressed as lb/ton. You must be at or below these values based on a 12-month rolling average.

[2] This emission limit applies regardless of whether the shrinkage controlled resin is used as a production resin or a tooling resin.

[3] If you only apply gel coat with manual application, for compliance purposes treat the gel coat as if it were applied using atomized spray guns to determine both emission limits and emission factors. If you use multiple application methods and any portion of a specific gel coat is applied using nonatomized spray, you may use the nonatomized spray gel coat equation to calculate an emission factor for the manually applied portion of that gel coat. Otherwise, use the atomized spray gel coat application equation to calculate emission factors.

[4] For compliance purposes, calculate your emission factor using only the appropriate centrifugal casting equation in item 2 of Table 1 to this subpart, or a site specific emission factor for after the mold is closed as discussed in § 63.5796.

[5] Calculate your emission factor using the appropriate open molding covered cure emission factor in item 1 of Table 1 to this subpart, or a site specific emission factor as discussed in § 63.5796.

[6] Pultrusion machines that produce parts that meet the following criteria: 1,000 or more reinforcements or the glass equivalent of 1,000 ends of 113 yield roving or more; and have a cross sectional area of 60 square inches or more are not subject to this requirement. Their requirement is the work practice of air flow management which is described in Table 4 to this subpart.

[70 FR 50131, Aug. 25, 2005]

Table 4 to Subpart WWWW of Part 63—Work Practice Standards

As specified in § 63.5805, you must meet the work practice standards in the following table that apply to you:

For . . .	You must . . .
1. A new or existing closed molding operation using compression/injection molding.	Uncover, unwrap or expose only one charge per mold cycle per compression/injection molding machine. For machines with multiple molds, one charge means sufficient material to fill all molds for one cycle. For machines with robotic loaders, no more than one charge may be exposed prior to the loader. For machines fed by hoppers, sufficient material may be uncovered to fill the hopper. Hoppers must be closed when not adding materials. Materials may be uncovered to feed to slitting machines. Materials must be recovered after slitting.
2. A new or existing cleaning operation	Not use cleaning solvents that contain HAP, except that styrene may be used as a cleaner in closed systems, and organic HAP containing cleaners may be used to clean cured resin from application equipment. Application equipment includes any equipment that directly contacts resin.

sfrattini on LAPJZKW1R2 with $$_JOB
VerDate Sep<11>2014 09:16 Apr 04, 2023 Jkt 256165 PO 00000 Frm 01251 Fmt 8010 Sfmt 8002 Q:\40\256165.XXX PC31

For . . .	You must . . .
3. A new or existing materials HAP-containing materials storage operation.	Keep containers that store HAP-containing materials closed or covered except during the addition or removal of materials. Bulk HAP-containing materials storage tanks may be vented as necessary for safety.
4. An existing or new SMC manufacturing operation ...	Close or cover the resin delivery system to the doctor box on each SMC manufacturing machine. The doctor box itself may be open.
5. An existing or new SMC manufacturing operation ...	Use a nylon containing film to enclose SMC.
6. All mixing or BMC manufacturing operations[1]	Use mixer covers with no visible gaps present in the mixer covers, except that gaps of up to 1 inch are permissible around mixer shafts and any required instrumentation. Mixers where the emissions are fully captured and routed to a 95 percent efficient control device are exempt from this requirement.
7. All mixing or BMC manufacturing operations[1]	Close any mixer vents when actual mixing is occurring, except that venting is allowed during addition of materials, or as necessary prior to adding materials or opening the cover for safety. Vents routed to a 95 percent efficient control device are exempt from this requirement.
8. All mixing or BMC manufacturing operations[1]	Keep the mixer covers closed while actual mixing is occurring except when adding materials or changing covers to the mixing vessels.
9. A new or existing pultrusion operation manufacturing parts that meet the following criteria: 1,000 or more reinforcements or the glass equivalent of 1,000 ends of 113 yield roving or more; and have a cross sectional area of 60 square inches or more that is not subject to the 95-percent organic HAP emission reduction requirement.	i. Not allow vents from the building ventilation system, or local or portable fans to blow directly on or across the wet-out area(s), ii. Not permit point suction of ambient air in the wet-out area(s) unless that air is directed to a control device, iii. Use devices such as deflectors, baffles, and curtains when practical to reduce air flow velocity across the wet-out area(s), iv. Direct any compressed air exhausts away from resin and wet-out area(s), v. Convey resin collected from drip-off pans or other devices to reservoirs, tanks, or sumps via covered troughs, pipes, or other covered conveyance that shields the resin from the ambient air, vi. Cover all reservoirs, tanks, sumps, or HAP-containing materials storage vessels except when they are being charged or filled, and vii. Cover or shield from ambient air resin delivery systems to the wet-out area(s) from reservoirs, tanks, or sumps where practical.

[1] Containers of 5 gallons or less may be open when active mixing is taking place, or during periods when they are in process (*i.e.,* they are actively being used to apply resin). For polymer casting mixing operations, containers with a surface area of 500 square inches or less may be open while active mixing is taking place.

[85 FR 15977, Mar. 20, 2020]

Table 5 to Subpart WWWW of Part 63—Alternative Organic HAP Emissions Limits for Open Molding, Centrifugal Casting, and SMC Manufacturing Operations Where the Standards Are Based on a 95 Percent Reduction Requirement

As specified in §63.5805, as an alternative to the 95 percent organic HAP emissions reductions requirement, you may meet the appropriate organic HAP emissions limits in the following table:

If your operation type is . . .	And you use . . .	LYour organic HAP emissions limit is a[1]. . .
1. Open molding—corrosion-resistant and/or high strength (CR/HS).	a. Mechanical resin application	6 lb/ton.
	b. Filament application	9 lb/ton.
	c. Manual resin application	7 lb/ton.
2. Open molding—non-CR/HS	a. mechanical resin application	13 lb/ton.
	b. Filament application	10 lb/ton.
	c. Manual resin application	5 lb/ton.
3. Open molding—tooling	a. Mechanical resin application	13 lb/ton.
	b. Manual resin application	8 lb/ton.
4. Open molding—low flame spread/low smoke products.	a. Mechanical resin application	25 lb/ton.
	b. Filament application	14 lb/ton.
	c. Manual resin application	12 lb/ton.
5. Open molding—shrinkage controlled resins	a. Mechanical resin application	18 lb/ton.
	b. Filament application	11 lb/ton.
	c. Manual resin application	9 lb/ton.
6. Open molding—gel coat[2]	a. Tooling gel coating	22 lb/ton.
	b. White/off white pigmented gel coating	22 lb/ton.
	c. All other pigmented gel coating	19 lb/ton.
	d. CR/HS or high performance gel coat	31 lb/ton.

sfrattini on LAPJZKW1R2 with $$_JOB
VerDate Sep<11>2014 09:16 Apr 04, 2023 Jkt 256165 PO 00000 Frm 01252 Fmt 8010 Sfmt 8002 Q:\40\256165.XXX PC31

If your operation type is . . .	And you use . . .	LYour organic HAP emissions limit is a[1]. . .
	e. Fire retardant gel coat	43 lb/ton.
	f. Clear production gel coat	27 lb/ton.
7. Centrifugal casting—CR/HS[3 4]	A vent system that moves heated air through the mold.	27 lb/ton.
8. Centrifugal casting—non-CR/HS[3 4]	A vent system that moves heated air through the mold.	21 lb/ton.
7. Centrifugal casting—CR/HS[3 4]	A vent system that moves ambient air through the mold.	2 lb/ton.
8. Centrifugal casting—non-CR/HS[3 4]	A vent system that moves ambient air through the mold.	1 lb/ton.
9. SMC Manufacturing	N/A	2.4 lb/ton.

[1] Organic HAP emissions limits for open molding and centrifugal casting expressed as lb/ton are calculated using the equations shown in Table 1 to this subpart. You must be at or below these values based on a 12-month rolling average.

[2] These limits are for spray application of gel coat. Manual gel coat application must be included as part of spray gel coat application for compliance purposes using the same organic HAP emissions factor equation and organic HAP emissions limit. If you only apply gel coat with manual application, treat the manually applied gel coat as if it were applied with atomized spray for compliance determinations.

[3] Centrifugal casting operations where the mold is not vented during spinning and cure are considered to be closed molding and are not subject to any emissions limit. Centrifugal casting operations where the mold is not vented during spinning and cure, and the resin is applied to the open centrifugal casting mold using mechanical or manual open molding resin application techniques are considered to be open molding operations and the appropriate open molding emission limits apply.

[4] Centrifugal casting operations where the mold is vented during spinning and the resin is applied to the open centrifugal casting mold using mechanical or manual open molding resin application techniques, use the appropriate centrifugal casting emission limit to determine compliance. Calculate your emission factor using the appropriate centrifugal casting emission factor in Table 1 to this subpart, or a site specific emission factor as discussed in § 63.5796.

[68 FR 19402, Apr. 21, 2003, as amended at 70 FR 50133, Aug. 25, 2005]

Table 6 to Subpart WWWW of Part 63—Basic Requirements for Performance Tests, Performance Evaluations, and Design Evaluations for New and Existing Sources Using Add-On Control Devices

As required in § 63.5850 you must conduct performance tests, performance evaluations, and design evaluation according to the requirements in the following table:

For . . .	You must . . .	Using . . .	According to the following requirements . . .
1. Each enclosure used to collect and route organic HAP emissions to an add-on control device that is a PTE.	Meet the requirements for a PTE.	EPA method 204 of appendix M of 40 CFR part 51.	Enclosures that meet the requirements of EPA Method 204 of appendix M of 40 CFR part 51 for a PTE are assumed to have a capture efficiency of 100%. Note that the criteria that all access doors and windows that are not treated as natural draft openings shall be closed during routine operation of the process is not intended to require that these doors and windows be closed at all times. It means that doors and windows must be closed any time that you are not actually moving parts or equipment through them. Also, any styrene retained in hollow parts and liberated outside the PTE is not considered to be a violation of the EPA Method 204 criteria.

sfrattini on LAPJZKW1R2 with $$_JOB
VerDate Sep<11>2014 09:16 Apr 04, 2023 Jkt 256165 PO 00000 Frm 01253 Fmt 8010 Sfmt 8002 Q:\40\256165.XXX PC31

For . . .	You must . . .	Using . . .	According to the following requirements . . .
2. Each enclosure used to collect and route organic HAP emissions to an add-on control device that is not a PTE.	a. Determine the capture efficiency of each enclosure used to capture organic HAP emissions sent to an add-on control device.	i. EPA methods 204B through E of appendix M of 40 CFR part 51, or	(1) Enclosures that do not meet the requirements for a PTE must determine the capture efficiency by constructing a temporary total enclosure according to the requirements of EPA Method 204 of appendix M of 40 CFR part 51 and measuring the mass flow rates of the organic HAP in the exhaust streams going to the atmosphere and to the control device. Test runs for EPA Methods 204B through E of appendix M of 40 CFR part 51 must be at least 3 hours.
		ii. An alternative test method that meets the requirements in 40 CFR part 51, appendix M.	(1) The alternative test method must the data quality objectives and lower confidence limit approaches for alternative capture efficiency protocols requirements contained in 40 CFR part 63 subpart KK, appendix A.
3. Each control device used to comply with a percent reduction requirement, or an organic HAP emissions limit.	Determine the control efficiency of each control device used to control organic HAP emissions.	The test methods specified in § 63.5850 to this subpart.	Testing and evaluation requirements are contained in 40 CFR part 63, subpart SS, and § 63.5850 to this subpart.
4. Determining organic HAP emission factors for any operation.	Determine the mass organic HAP emissions rate.	The test methods specified in § 63.5850 to this subpart.	Testing and evaluation requirements are contained in 40 CFR part 63, subpart SS, and § 63.5850 to this subpart.

Table 7 to Subpart WWWW of Part 63—Options Allowing Use of the Same Resin Across Different Operations That Use the Same Resin Type

As specified in § 63.5810(d), when electing to use the same resin(s) for multiple resin application methods, you may use any resin(s) with an organic HAP content less than or equal to the values shown in the following table, or any combination of resins whose weighted average organic HAP content based on a 12-month rolling average is less than or equal to the values shown the following table:

If your facility has the following resin type and application method . . .	The highest resin weight is* * * percent organic HAP content, or weighted average weight percent organic HAP content, you can use for . . .	is . . .
1. CR/HS resins, centrifugal casting [1] [2]	a. CR/HS mechanical	[3] 48.0
	b. CR/HS filament application	48.0
	c. CR/HS manual	48.0
2. CR/HS resins, nonatomized mechanical	a. CR/HS filament application	46.4
	b. CR/HS manual	46.4
3. CR/HS resins, filament application	CR/HS manual	42.0
4. non-CR/HS resins, filament application	a. non-CR/HS mechanical	[3] 45.0
	b. non-CR/HS manual	45.0
	c. non-CR/HS centrifugal casting [1] [2]	45.0
5. non-CR/HS resins, nonatomized mechanical	a. non-CR/HS manual	38.5
	b. non-CR/HS centrifugal casting [1] [2]	38.5
6. non-CR/HS resins, centrifugal casting [1] [2]	non-CR/HS manual	37.5
7. tooling resins, nonatomized mechanical	tooling manual	91.4
8. tooling resins, manual	tooling atomized mechanical	45.9

[1] If the centrifugal casting operation blows heated air through the molds, then 95 percent capture and control must be used if the facility wishes to use this compliance option.

sfrattini on LAPJZKW1R2 with $$_JOB
VerDate Sep<11>2014 09:16 Apr 04, 2023 Jkt 256165 PO 00000 Frm 01254 Fmt 8010 Sfmt 8002 Q:\40\256165.XXX PC31

[2] If the centrifugal casting molds are not vented, the facility may treat the centrifugal casting operations as if they were vented if they wish to use this compliance option.
[3] Nonatomized mechanical application must be used.

[70 FR 50133, Aug. 25, 2005]

TABLE 8 TO SUBPART WWWW OF PART 63—INITIAL COMPLIANCE WITH ORGANIC HAP EMISSIONS LIMITS

As specified in §63.5860(a), you must demonstrate initial compliance with organic HAP emissions limits as specified in the following table:

For . . .	That must meet the following organic HAP emissions limit . . .	You have demonstrated initial compliance if . . .
1. open molding and centrifugal casting operations.	a. an organic HAP emissions limit shown in Tables 3 or 5 to this subpart, or an organic HAP content limit shown in Table 7 to this subpart.	i. you have met the appropriate organic HAP emissions limits for these operations as calculated using the procedures in §63.5810 on a 12-month rolling average 1 year after the appropriate compliance date, and/or ii. you demonstrate that any individual resins or gel coats not included in (i) above, as applied, meet their applicable emission limits, or iii. you demonstrate using the appropriate values in Table 7 to this subpart that the weighted average of all resins and gel coats for each resin type and application method meet the appropriate organic HAP contents.
2. open molding centrifugal casting, continuous lamination/casting, SMC and BMC manufacturing, and mixing operations.	a. reduce total organic HAP emissions by at least 95 percent by weight.	total organic HAP emissions, based on the results of the capture efficiency and destruction efficiency testing specified in Table 6 to this subpart, are reduced by at least 95 percent by weight.
3. continuous lamination/casting operations.	a. reduce total organic HAP emissions, by at least 58.5 weight percent, or	total organic HAP emissions, based on the results of the capture efficiency and destruction efficiency in Table 6 to this subpart and the calculation procedures specified in §§63.5865 through 63.5890, are reduced by at least 58.5 percent by weight.
	b. not exceed an organic HAP emissions limit of 15.7 lbs of organic HAP per ton of neat resin plus and neat gel coat plus.	total organic HAP emissions, based on the results of the capture efficiency and destruction efficiency testing specified in Table 6 to this subpart and the calculation procedures specified in §§63.5865 through 63.5890, do not exceed 15.7 lbs of organic HAP per ton of neat resin plus and neat gel coat plus.
4. continuous lamination/casting operations.	a. reduce total organic HAP emissions by at least 95 weight percent or	total organic HAP emissions, based on the results of the capture efficiency and destruction efficiency testing specified in Table 6 to this subpart and the calculation procedures specified in §§63.5865 through 63.5890, are reduced by at least 95 percent by weight
	b. not exceed an organic HAP emissions limit of 1.47 lbs of organic HAP per ton of neat resin plus and neat gel coat plus.	total organic HAP emissions, based on the results of the capture efficiency and destruction efficiency testing specified in Table 6 and the calculation procedures specified in §§63.5865 through 63.5890, do not exceed 1.47 lbs of organic HAP of per ton of neat resin plus and neat gel coat plus.

sfrattini on LAPJZKW1R2 with $$_JOB
VerDate Sep<11>2014 09:16 Apr 04, 2023 Jkt 256165 PO 00000 Frm 01255 Fmt 8010 Sfmt 8002 Q:\40\256165.XXX PC31

For . . .	That must meet the following organic HAP emissions limit . . .	You have demonstrated initial compliance if . . .
5. pultrusion operations	a. reduce total organic HAP emissions by at least 60 percent by weight.	i. total organic HAP emissions, based on the results of the capture efficiency and add-on control device destruction efficiency testing specified in Table 6 to this subpart, are reduced by at least 60 percent by weight, and/or ii. as part of the notification of initial compliance status, the owner/operator submits a certified statement that all pultrusion lines not controlled with an add-on control device, but for which an emission reduction is being claimed, are using direct die injection, and/or wet-area enclosures that meet the criteria of § 63.5830.
6. pultrusion operations	a. reduce total organic HAP emissions by at least 95 percent by weight.	i. total organic HAP emissions, based on the results of the capture efficiency and add-on control device destruction efficiency testing specified in Table 6 to this subpart, are reduced by at least 95 percent by weight.

[70 FR 50134, Aug. 25, 2005]

Table 9 to Subpart WWWW of Part 63—Initial Compliance With Work Practice Standards

As specified in § 63.5860(a), you must demonstrate initial compliance with work practice standards as specified in the following table:

For . . .	That must meet the following standards . . .	You have demonstrated initial compliance if . . .
1. a new or existing closed molding operation using compression/injection molding.	uncover, unwrap or expose only one charge per mold cycle per compression/injection molding machine. For machines with multiple molds, one charge means sufficient material to fill all molds for one cycle. For machines with robotic loaders, no more than one charge may be exposed prior to the loader. For machines fed by hoppers, sufficient material may be uncovered to fill the hopper. Hoppers must be closed when not adding materials. Materials may be uncovered to feed to slitting machines. Materials must be recovered after slitting.	the owner or operator submits a certified statement in the notice of compliance status that only one charge is uncovered, unwrapped, or exposed per mold cycle per compression/injection molding machine, or prior to the loader, hoppers are closed except when adding materials, and materials are recovered after slitting.
2. a new or existing cleaning operation	not use cleaning solvents that contain HAP, except that styrene may be used in closed systems, and organic HAP containing materials may be used to clean cured resin from application equipment. Application equipment includes any equipment that directly contacts resin between storage and applying resin to the mold or reinforcement.	the owner or operator submits a certified statement in the notice of compliance status that all cleaning materials, except styrene contained in closed systems, or materials used to clean cured resin from application equipment, contain no HAP.
3. a new or existing materials HAP-containing materials storage operation.	keep containers that store HAP-containing materials closed or covered except during the addition or removal of materials. Bulk HAP-containing materials storage tanks may be vented as necessary for safety.	the owner or operator submits a certified statement in the notice of compliance status that all HAP-containing storage containers are kept closed or covered except when adding or removing materials, and that any bulk storage tanks are vented only as necessary for safety.

sfrattini on LAPJZKW1R2 with $$_JOB
VerDate Sep<11>2014 09:16 Apr 04, 2023 Jkt 256165 PO 00000 Frm 01256 Fmt 8010 Sfmt 8002 Q:\40\256165.XXX PC31

For . . .	That must meet the following standards . . .	You have demonstrated initial compliance if . . .
4. an existing or new SMC manufacturing operation.	close or cover the resin delivery system to the doctor box on each SMC manufacturing machine. The doctor box itself may be open.	the owner or operator submits a certified statement in the notice of compliance status that the resin delivery system is closed or covered.
5. an existing or new SMC manufacturing operation.	use a nylon containing film to enclose SMC.	the owner or operator submits a certified statement in the notice of compliance status that a nylon-containing film is used to enclose SMC.
6. an existing or new mixing or BMC manufacturing operation.	use mixer covers with no visible gaps present in the mixer covers, except that gaps of up to 1 inch are permissible around mixer shafts and any required instrumentation.	the owner or operator submits a certified statement in the notice of compliance status that mixer covers are closed during mixing except when adding materials to the mixers, and that gaps around mixer shafts and required instrumentation are less than 1 inch.
7. an existing mixing or BMC manufacturing operation.	not actively vent mixers to the atmosphere while the mixing agitator is turning, except that venting is allowed during addition of materials, or as necessary prior to adding materials for safety.	the owner or operator submits a certified statement in the notice of compliance status that mixers are not actively vented to the atmosphere when the agitator is turning except when adding materials or as necessary for safety.
8. a new or existing mixing or BMC manufacturing operation.	keep the mixer covers closed during mixing except when adding materials to the mixing vessels.	the owner or operator submits a certified statement in the notice of compliance status that mixers closed except when adding materials to the mixing vessels.
9. a new or existing pultrusion operation manufacturing parts that meet the following criteria: 1,000 or more reinforcements or the glass equivalent of 1,000 ends of 113 yield roving or more; and have a cross sectional area of 60 square inches or more that is not subject to the 95 percent organic HAP emission reduction requirement.	i. Not allow vents from the building ventilation system, or local or portable fans to blow directly on or across the wet-out area(s), ii. not permit point suction of ambient air in the wet-out area(s) unless that air is directed to a control device, iii. use devices such as deflectors, baffles, and curtains when practical to reduce air flow velocity across the wet-out area(s), iv. direct any compressed air exhausts away from resin and wet-out area(s), v. convey resin collected from drip-off pans or other devices to reservoirs, tanks, or sumps via covered troughs, pipes, or other covered conveyance that shields the resin from the ambient air, vi. clover all reservoirs, tanks, sumps, or HAP-containing materials storage vessels except when they are being charged or filled, and vii. cover or shield from ambient air resin delivery systems to the wet-out area(s) from reservoirs, tanks, or sumps where practical.	the owner or operator submits a certified statement in the notice of compliance status that they have complied with all the requirements listed in 9.i through 9.vii.

[70 FR 50135, Aug. 25, 2005]

TABLE 10 TO SUBPART WWWW OF PART 63—DATA REQUIREMENTS FOR NEW AND EXISTING CONTINUOUS LAMINATION LINES AND CONTINUOUS CASTING LINES COMPLYING WITH A PERCENT REDUCTION LIMIT ON A PER LINE BASIS

As required in § 63.5865(a), in order to comply with a percent reduction limit for continuous lamination lines and continuous casting lines you must determine the data in the following table:

sfrattini on LAPJZKW1R2 with $$_JOB
VerDate Sep<11>2014 09:16 Apr 04, 2023 Jkt 256165 PO 00000 Frm 01257 Fmt 8010 Sfmt 8026 Q:\40\256165.XXX PC31

For each line where the wet-out area . . .	And the oven . . .	You must determine . . .
1. Has an enclosure that is not a permanent total enclosure (PTE) and the captured organic HAP emissions are controlled by an add-on control device.	a. Is uncontrolled	i. Annual uncontrolled wet-out area organic HAP emissions, ii. Annual controlled wet-out area organic HAP emissions, iii. Annual uncontrolled oven organic HAP emissions, iv. The capture efficiency of the wet-out area enclosure, v. The destruction efficiency of the add-on control device, and vi. The amount of neat resin plus and neat gel coat plus applied.
2. Has an enclosure that is a PTE and the captured organic HAP emissions are controlled by an add-on control device.	a. Is uncontrolled	i. Annual uncontrolled wet-out area organic HAP emissions, ii. Annual controlled wet-out area organic HAP emissions, iii. Annual uncontrolled oven organic HAP emissions, iv. That the wet-out area enclosure meets the requirements of EPA Method 204 of appendix M to 40 CFR part 51 for a PTE, v. The destruction efficiency of the add-on control device, and vi. The amount of neat resin plus and neat gel coat plus applied.
3. Is uncontrolled	a. Is controlled by an add-on control device.	i. Annual uncontrolled wet-out area organic HAP emissions, ii. Annual uncontrolled oven organic HAP emissions, iii. Annual controlled oven organic HAP emissions, iv. The capture efficiency of the oven, v. the destruction efficiency of the add-on control device, and vi. the amount of neat resin plus and neat gel coat plus applied.
4. Has an enclosure that is not a PTE and the captured organic HAP emissions are controlled by an add-on control device.	a. Is controlled by an add-on control device.	i. Annual uncontrolled wet-out area organic HAP emissions, ii. Annual controlled wet-out area organic HAP emissions, iii. Annual uncontrolled oven organic HAP emissions, iv. Annual controlled oven organic HAP emissions; v. The capture efficiency of the wet-out area enclosure, vi. Inlet organic HAP emissions to the add-on control device, vii. Outlet organic HAP emissions from the add-on control device, and viii. The amount of neat resin plus and neat gel coat plus applied.
5. Has an enclosure that is a PTE and the captured organic HAP emissions are controlled by an add-on control device.	a. Is controlled by an add-on control device.	i. That the wet-out area enclosure meets the requirements of EPA Method 204 of appendix M to 40 CFR part 51 for a PTE, ii. The capture efficiency of the oven, and iii. The destruction efficiency of the add-on control device.

Table 11 to Subpart WWWW of Part 63—Data Requirements for New and Existing Continuous Lamination and Continuous Casting Lines Complying With a Percent Reduction Limit or a Lbs/Ton Limit on an Averaging Basis

As required in § 63.5865, in order to comply with a percent reduction limit or a lbs/ton limit on an averaging basis for continuous lamination lines and continuous casting lines you must determine the data in the following table:

sfrattini on LAPJZKW1R2 with $$_JOB
VerDate Sep<11>2014 09:16 Apr 04, 2023 Jkt 256165 PO 00000 Frm 01258 Fmt 8010 Sfmt 8026 Q:\40\256165.XXX PC31

For each . . .	That . . .	You must determine . . .
1. Wet-out area	Is uncontrolled	Annual uncontrolled wet-out area organic HAP emissions.
2. Wet-out area	a. Has an enclosure that is not a PTE	i. The capture efficiency of the enclosure, and ii. Annual organic HAP emissions that escape the enclosure.
3. Wet-out area	Has an enclosure that is a PTE	That the enclosure meets the requirements of EPA Method 204 of appendix M to 40 CFR part 51 for a PTE.
4. Oven	Is uncontrolled	Annual uncontrolled oven organic HAP emissions.
5. Line	a. Is controlled or uncontrolled	i. The amount of neat resin plus applied, and ii. The amount of neat gel coat plus applied.
6. Add-on control device		i. Total annual inlet organic HAP emissions, and total annual outlet organic HAP emissions.

TABLE 12 TO SUBPART WWWW OF PART 63—DATA REQUIREMENTS FOR NEW AND EXISTING CONTINUOUS LAMINATION LINES AND CONTINUOUS CASTING LINES COMPLYING WITH A LBS/TON ORGANIC HAP EMISSIONS LIMIT ON A PER LINE BASIS

As required in §63.5865(b), in order to comply with a lbs/ton organic HAP emissions limit for continuous lamination lines and continuous casting lines you must determine the data in the following table:

For each line where the wet- out area . . .	And the oven . . .	You must determine . . .
1. Is uncontrolled	a. Is uncontrolled	i. Annual uncontrolled wet-out area organic HAP emissions, ii. Annual uncontrolled oven organic HAP emissions, and iii. Annual neat resin plus and neat gel coat plus applied.
2. Has an enclosure that is not a PTE and the captured organic HAP emissions are controlled by an add-on control device.	a. Is uncontrolled	i. Annual uncontrolled wet-out area organic HAP emissions, ii. Annual controlled wet-out area organic HAP emissions, iii. Annual uncontrolled oven organic HAP emissions, iv. The capture efficiency of the wet-out area enclosure, v. The destruction efficiency of the add-on control device, and vi. The amount of neat resin plus and neat gel coat plus applied.
3. Has an enclosure that is a PTE, and the captured organic HAP emissions are controlled by an add-on control device.	a. Is uncontrolled	i. Annual uncontrolled wet-out area organic HAP emissions, ii. Annual controlled wet-out area organic HAP emissions, iii. Annual uncontrolled oven organic HAP emissions, iv. That the wet-out area enclosure meets the requirements of EPA Method 204 of appendix M to 40 CFR part 51 for a PTE, v. The destruction efficiency of the add-on control device, and vi. The amount of neat resin plus and neat gel coat plus applied.
4. Is uncontrolled	a. Is controlled by an add-on control device.	i. Annual uncontrolled wet-out area organic HAP emissions, ii. Annual uncontrolled oven organic HAP emissions, iii. Annual controlled oven organic HAP emissions,

sfrattini on LAPJZKW1R2 with $$_JOB
VerDate Sep<11>2014 09:16 Apr 04, 2023 Jkt 256165 PO 00000 Frm 01259 Fmt 8010 Sfmt 8002 Q:\40\256165.XXX PC31

For each line where the wet- out area . . .	And the oven . . .	You must determine . . .
		iv. The capture efficiency of the oven, v. The destruction efficiency of the add-on control device, and vi. The amount of neat resin plus and neat gel coat plus applied.
5. Has an enclosure that is not a PTE and the captured organic HAP emissions are controlled by an add-on control device.	a. Is controlled by an add-on control device.	i. Annual uncontrolled wet-out area organic HAP emissions, ii. Annual controlled wet-out area organic HAP emissions, iii. Annual uncontrolled oven organic HAP emissions, iv. Annual controlled oven organic HAP emissions, v. The capture efficiency of the wet-out area enclosure, vi. The capture efficiency of the oven, vii. The destruction efficiency of the add-on control device, and viii. The amount of neat resin plus and neat gel coat plus applied.
6. Has an enclosure that is a PTE, and the captured organic HAP emissions are controlled by add-on control device.	a. Is controlled by an add-on control device.	i. That the wet-out area enclosure meets the requirements of EPA Method 204 of appendix M to 40 CFR part 51 for a PTE, ii. The capture efficiency of the oven, iii. Inlet organic HAP emissions to the an add-on control device, and iv. Outlet organic HAP emissions from the add-on control device.

TABLE 13 TO SUBPART WWWW OF PART 63—APPLICABILITY AND TIMING OF NOTIFICATIONS

As required in § 63.5905(a), you must determine the applicable notifications and submit them by the dates shown in the following table:

If your facility . . .	You must submit . . .	By this date . . .
1. Is an existing source subject to this subpart.	An Initial Notification containing the information specified in § 63.9(b)(2).	No later than the dates specified in § 63.9(b)(2).
2. Is a new source subject to this subpart	The notifications specified in § 63.9(b)(4) and (5).	No later than the dates specified § 63.9(b)(4) and (5).
3. Qualifies for a compliance extension as specified in § 63.9(c).	A request for a compliance extension as specified in § 63.9(c).	No later than the dates specified in § 63.6(i).
4. Is complying with organic HAP emissions limit averaging provisions.	A Notification of Compliance Status as specified in § 63.9(h).	No later than 1 year plus 30 days after your facility's compliance date.
5. Is complying with organic HAP content limits, application equipment requirements, or organic HAP emissions limit other than organic HAP emissions limit averaging.	A Notification of Compliance Status as specified in § 63.9(h).	No later than 30 calendar days after your facility's compliance date.
6. Is complying by using an add-on control device.	a. A notification of intent to conduct a performance test as specified in § 63.9(e).	No later than the date specified in § 63.9(e).
	b. A notification of the date for the CMS performance evaluation as specified in § 63.9(g).	The date of submission of notification of intent to conduct a performance test.
	c. A Notification of Compliance Status as specified in § 63.9(h).	No later than 60 calendar days after the completion of the add-on control device performance test and CMS performance evaluation.

TABLE 14 TO SUBPART WWWW OF PART 63—REQUIREMENTS FOR REPORTS

As required in § 63.5910(a), (b), (g), and (h), you must submit reports on the schedule shown in the following table:

sfrattini on LAPJZKW1R2 with $$_JOB
VerDate Sep<11>2014 09:16 Apr 04, 2023 Jkt 256165 PO 00000 Frm 01260 Fmt 8010 Sfmt 8026 Q:\40\256165.XXX PC31

You must submit a(n)	The report must contain . . .	You must submit the report . . .
1. Compliance report	a. A statement that there were no deviations during that reporting period if there were no deviations from any emission limitations (emission limit, operating limit, opacity limit, and visible emission limit) that apply to you and there were no deviations from the requirements for work practice standards in Table 4 to this subpart that apply to you. If there were no periods during which the CMS, including CEMS, and operating parameter monitoring systems, was out of control as specified in §63.8(c)(7), the report must also contain a statement that there were no periods during which the CMS was out of control during the reporting period.	Semiannually according to the requirements in §63.5910(b).
	b. The information in §63.5910(d) if you have a deviation from any emission limitation (emission limit, operating limit, or work practice standard) during the reporting period. If there were periods during which the CMS, including CEMS, and operating parameter monitoring systems, was out of control, as specified in §63.8(c)(7), the report must contain the information in §63.5910(e).	Semiannually according to the requirements in §63.5910(b).

[85 FR 15978, Mar. 20, 2020]

Table 15 to Subpart WWWW of Part 63—Applicability of General Provisions (Subpart A) to Subpart WWWW of Part 63

As specified in §63.5925, the parts of the General Provisions which apply to you are shown in the following table:

The general provisions reference . . .	That addresses . . .	And applies to subpart WWWW of part 63 . . .	Subject to the following additional information . . .
§63.1(a)(1)	General applicability of the general provisions.	Yes	Additional terms defined in subpart WWWW of part 63, when overlap between subparts A and WWWW of this part, subpart WWWW of part 63 takes precedence.
§63.1(a)(2) through (4)	General applicability of the general provisions.	Yes	
§63.1(a)(5)	Reserved	No	
§63.1(a)(6)	General applicability of the general provisions.	Yes	
§63.1(a)(7) through (9)	Reserved	No	
§63.1(a)(10) through (14).	General applicability of the general provisions.	Yes	
§63.1(b)(1)	Initial applicability determination	Yes	Subpart WWWW of part 63 clarifies the applicability in §§63.5780 and 63.5785.
§63.1(b)(2)	Reserved	No	
§63.1(b)(3)	Record of the applicability determination.	Yes	
§63.1(c)(1)	Applicability of this part after a relevant standard has been set under this part.	Yes	Subpart WWWW of part 63 clarifies the applicability of each paragraph of subpart A to sources subject to subpart WWWW of part 63.
§63.1(c)(2)	Title V operating permit requirement	Yes	All major affected sources are required to obtain a title V operating permit. Area sources are not subject to subpart WWWW of part 63.
§63.1(c)(3) and (4)	Reserved	No	
§63.1(c)(5)	Notification requirements for an area source that increases HAP emissions to major source levels.	Yes	
§63.1(c)(6)	Reclassification	Yes.	
§63.1(d)	Reserved	No	
§63.1(e)	Applicability of permit program before a relevant standard has been set under this part.	Yes	

sfrattini on LAPJZKW1R2 with $$_JOB
VerDate Sep<11>2014 09:16 Apr 04, 2023 Jkt 256165 PO 00000 Frm 01261 Fmt 8010 Sfmt 8002 Q:\40\256165.XXX PC31

The general provisions reference . . .	That addresses . . .	And applies to subpart WWWW of part 63 . . .	Subject to the following additional information . . .
§ 63.2	Definitions	Yes	Subpart WWWW of part 63 defines terms in § 63.5935. When overlap between subparts A and WWWW of part 63 occurs, you must comply with the subpart WWWW of part 63 definitions, which take precedence over the subpart A definitions.
§ 63.3	Units and abbreviations	Yes	Other units and abbreviations used in subpart WWWW of part 63 are defined in subpart WWWW of part 63.
§ 63.4	Prohibited activities and circumvention.	Yes	§ 63.4(a)(3) through (5) is reserved and does not apply.
§ 63.5(a)(1) and (2)	Applicability of construction and reconstruction.	Yes	Existing facilities do not become reconstructed under subpart WWWW of part 63.
§ 63.5(b)(1)	Relevant standards for new sources upon construction.	Yes	Existing facilities do not become reconstructed under subpart WWWW of part 63.
§ 63.5(b)(2)	Reserved	No	
§ 63.5(b)(3)	New construction/reconstruction	Yes	Existing facilities do not become reconstructed under subpart WWWW of part 63.
§ 63.5(b)(4)	Construction/reconstruction notification.	Yes	Existing facilities do not become reconstructed under subpart WWWW of part 63.
§ 63.5(b)(5)	Reserved	No	
§ 63.5(b)(6)	Equipment addition or process change.	Yes	Existing facilities do not become reconstructed under subpart WWWW of part 63.
§ 63.5(c)	Reserved	No	
§ 63.5(d)(1)	General application for approval of construction or reconstruction.	Yes	Existing facilities do not become reconstructed under subpart WWWW of part 63.
§ 63.5(d)(2)	Application for approval of construction.	Yes	
§ 63.5(d)(3)	Application for approval of reconstruction.	No	
§ 63.5(d)(4)	Additional information	Yes	
§ 63.5(e)(1) through (5)	Approval of construction or reconstruction.	Yes	
§ 63.5(f)(1) and (2)	Approval of construction or reconstruction based on prior State preconstruction review.	Yes	
§ 63.6(a)(1)	Applicability of compliance with standards and maintenance requirements.	Yes	
§ 63.6(a)(2)	Applicability of area sources that increase HAP emissions to become major sources.	Yes	
§ 63.6(b)(1) through (5)	Compliance dates for new and reconstructed sources.	Yes	Subpart WWWW of part 63 clarifies compliance dates in § 63.5800.
§ 63.6(b)(6)	Reserved	No	
§ 63.6(b)(7)	Compliance dates for new operations or equipment that cause an area source to become a major source.	Yes	New operations at an existing facility are not subject to new source standards.
§ 63.6(c)(1) and (2)	Compliance dates for existing sources.	Yes	Subpart WWWW of part 63 clarifies compliance dates in § 63.5800.
§ 63.6(c)(3) and (4)	Reserved	No	
§ 63.6(c)(5)	Compliance dates for existing area sources that become major.	Yes	Subpart WWWW of part 63 clarifies compliance dates in § 63.5800.
§ 63.6(d)	Reserved	No	
§ 63.6(e)(1)	Operation and maintenance requirements.	Yes	Except portions of § 63.6(e)(1)(i) and (ii) specific to conditions during startup, shutdown, or malfunction.
§ 63.6(e)(3)	SSM plan and recordkeeping	No	
§ 63.6(f)(1)	Compliance except during periods of startup, shutdown, and malfunction.	No	Subpart WWWW of part 63 requires compliance at all times.
§ 63.6(f)(2) and (3)	Methods for determining compliance	Yes	

sfrattini on LAPJZKW1R2 with $$_JOB
VerDate Sep<11>2014 09:16 Apr 04, 2023 Jkt 256165 PO 00000 Frm 01262 Fmt 8010 Sfmt 8002 Q:\40\256165.XXX PC31

The general provisions reference . . .	That addresses . . .	And applies to subpart WWWW of part 63 . . .	Subject to the following additional information . . .
§ 63.6(g)(1) through (3)	Alternative standard	Yes	
§ 63.6(h)	Opacity and visible emission Standards.	No	Subpart WWWW of part 63 does not contain opacity or visible emission standards.
§ 63.6(i)(1) through (14)	Compliance extensions	Yes	
§ 63.6(i)(15)	Reserved	No	
§ 63.6(i)(16)	Compliance extensions	Yes	
§ 63.6(j)	Presidential compliance exemption	Yes	
§ 63.7(a)(1)	Applicability of performance testing requirements.	Yes	
§ 63.7(a)(2)	Performance test dates	No	Subpart WWWW of part 63 initial compliance requirements are in § 63.5840.
§ 63.7(a)(3)	CAA Section 114 authority	Yes	
§ 63.7(b)(1)	Notification of performance test	Yes	
§ 63.7(b)(2)	Notification rescheduled performance test.	Yes	
§ 63.7(c)	Quality assurance program, including test plan.	Yes	Except that the test plan must be submitted with the notification of the performance test.
§ 63.7(d)	Performance testing facilities	Yes	
§ 63.7(e)	Conditions for conducting performance tests.	Yes	Performance test requirements are contained in § 63.5850. Additional requirements for conducting performance tests for continuous lamination/casting are included in § 63.5870. Conditions specific to operations during periods of startup, shutdown, and malfunction in § 63.7(e)(1) do not apply.
§ 63.7(f)	Use of alternative test method	Yes	
§ 63.7(g)	Performance test data analysis, recordkeeping, and reporting.	Yes	
§ 63.7(h)	Waiver of performance tests	Yes	
§ 63.8(a)(1) and (2)	Applicability of monitoring requirements.	Yes	
§ 63.8(a)(3)	Reserved	No	
§ 63.8(a)(4)	Monitoring requirements when using flares.	Yes	
§ 63.8(b)(1)	Conduct of monitoring exceptions	Yes	
§ 63.8(b)(2) and (3)	Multiple effluents and multiple monitoring systems.	Yes	
§ 63.8(c)(1)	Compliance with CMS operation and maintenance requirements.	Yes	This section applies if you elect to use a CMS to demonstrate continuous compliance with an emission limit. Except references to SSM plans in § 63.8(c)(1)(i) and (iii).
§ 63.8(c)(2) and (3)	Monitoring system installation	Yes	This section applies if you elect to use a CMS to demonstrate continuous compliance with an emission limit.
§ 63.8(c)(4)	CMS requirements	Yes	This section applies if you elect to use a CMS to demonstrate continuous compliance with an emission limit.
§ 63.8(c)(5)	Continuous Opacity Monitoring System (COMS) minimum procedures.	No	Subpart WWWW of part 63 does not contain opacity standards.
§ 63.8(c)(6) through (8)	CMS calibration and periods CMS is out of control.	Yes	This section applies if you elect to use a CMS to demonstrate continuous compliance with an emission limit.
§ 63.8(d)(1)–(2)	CMS quality control program, including test plan and all previous versions.	Yes	This section applies if you elect to use a CMS to demonstrate continuous compliance with an emission limit.
§ 63.8(d)(3)	CMS quality control program, including test plan and all previous versions.	Yes	Except references to SSM plans in § 63.8(d)(3).

sfrattini on LAPJZKW1R2 with $$_JOB
VerDate Sep<11>2014 09:16 Apr 04, 2023 Jkt 256165 PO 00000 Frm 01263 Fmt 8010 Sfmt 8002 Q:\40\256165.XXX PC31

The general provisions reference . . .	That addresses . . .	And applies to subpart WWWW of part 63 . . .	Subject to the following additional information . . .
§ 63.8(e)(1)	Performance evaluation of CMS	Yes	This section applies if you elect to use a CMS to demonstrate continuous compliance with an emission limit.
§ 63.8(e)(2)	Notification of performance evaluation.	Yes	This section applies if you elect to use a CMS to demonstrate continuous compliance with an emission limit.
§ 63.8(e)(3) and (4)	CMS requirements/alternatives	Yes	This section applies if you elect to use a CMS to demonstrate continuous compliance with an emission limit.
§ 63.8(e)(5)(i)	Reporting performance evaluation results.	Yes	This section applies if you elect to use a CMS to demonstrate continuous compliance with an emission limit.
§ 63.8(e)(5)(ii)	Results of COMS performance evaluation.	No	Subpart WWWW of part 63 does not contain opacity standards.
§ 63.8(f)(1) through (3)	Use of an alternative monitoring method.	Yes	
§ 63.8(f)(4)	Request to use an alternative monitoring method.	Yes	
§ 63.8(f)(5)	Approval of request to use an alternative monitoring method.	Yes	
§ 63.8(f)(6)	Request for alternative to relative accuracy test and associated records.	Yes	This section applies if you elect to use a CMS to demonstrate continuous compliance with an emission limit.
§ 63.8(g)(1) through (5)	Data reduction	Yes	
§ 63.9(a)(1) through (4)	Notification requirements and general information.	Yes	
§ 63.9(b)(1)	Initial notification applicability	Yes	
§ 63.9(b)(2)	Notification for affected source with initial startup before effective date of standard.	Yes	
§ 63.9(b)(3)	Reserved	No	
§ 63.9(b)(4)(i)	Notification for a new or reconstructed major affected source with initial startup after effective date for which an application for approval of construction or reconstruction is required.	Yes	
§ 63.9(b)(4)(ii) through (iv).	Reserved	No	
§ 63.9(b)(4)(v)	Notification for a new or reconstructed major affected source with initial startup after effective date for which an application for approval of construction or reconstruction is required.	Yes	Existing facilities do not become reconstructed under subpart WWWW of part 63.
§ 63.9(b)(5)	Notification that you are subject to this subpart for new or reconstructed affected source with initial startup after effective date and for which an application for approval of construction or reconstruction is not required.	Yes	Existing facilities do not become reconstructed under subpart WWWW of part 63.
§ 63.9(c)	Request for compliance extension	Yes	
§ 63.9(d)	Notification of special compliance requirements for new source.	Yes	
§ 63.9(e)	Notification of performance test	Yes	
§ 63.9(f)	Notification of opacity and visible emissions observations.	No	Subpart WWWW of part 63 does not contain opacity or visible emission standards.
§ 63.9(g)(1)	Additional notification requirements for sources using CMS.	Yes	This section applies if you elect to use a CMS to demonstrate continuous compliance with an emission limit.
§ 63.9(g)(2)	Notification of compliance with opacity emission standard.	No	Subpart WWWW of part 63 does not contain opacity emission standards.

sfrattini on LAPJZKW1R2 with $$_JOB
VerDate Sep<11>2014 09:16 Apr 04, 2023 Jkt 256165 PO 00000 Frm 01264 Fmt 8010 Sfmt 8002 Q:\40\256165.XXX PC31

The general provisions reference . . .	That addresses . . .	And applies to subpart WWWW of part 63 . . .	Subject to the following additional information . . .
§ 63.9(g)(3)	Notification that criterion to continue use of alternative to relative accuracy testing has been exceeded.	Yes	This section applies if you elect to use a CMS to demonstrate continuous compliance with an emission limit.
§ 63.9(h)(1) through (3)	Notification of compliance status	Yes	
§ 63.9(h)(4)	Reserved	No	
§ 63.9(h)(5) and (6)	Notification of compliance status	Yes	
§ 63.9(i)	Adjustment of submittal deadlines	Yes	
§ 63.9(j)	Change in information provided	Yes	
§ 63.9(k)	Electronic reporting procedures	Yes	Only as specified in § 63.9(j).
§ 63.10(a)	Applicability of recordkeeping and reporting.	Yes	
§ 63.10(b)(1)	Records retention	Yes	
§ 63.10(b)(2)(i) through (v).	Records related to startup, shutdown, and malfunction.	No	
§ 63.10(b)(2)(vi) through (xi).	CMS records, data on performance tests, CMS performance evaluations, measurements necessary to determine conditions of performance tests, and performance evaluations.	Yes	
§ 63.10(b)(2)(xii)	Record of waiver of recordkeeping and reporting.	Yes	
§ 63.10(b)(2)(xiii)	Record for alternative to the relative accuracy test.	Yes	
§ 63.10(b)(2)(xiv)	Records supporting initial notification and notification of compliance status.	Yes	
§ 63.10(b)(3)	Records for applicability determinations.	Yes	
§ 63.10(c)(1)	CMS records	Yes	This section applies if you elect to use a CMS to demonstrate continuous compliance with an emission limit.
§ 63.10(c)(2) through (4)	Reserved	No	
§ 63.10(c)(5) through (8)	CMS records	Yes	This section applies if you elect to use a CMS to demonstrate continuous compliance with an emission limit.
§ 63.10(c)(9)	Reserved	No	
§ 63.10(c)(10) through (14).	CMS records	Yes	This section applies if you elect to use a CMS to demonstrate continuous compliance with an emission limit.
§ 63.10(c)(15)	CMS records	No	
§ 63.10(d)(1)	General reporting requirements	Yes	
§ 63.10(d)(2)	Report of performance test results	Yes	
§ 63.10(d)(3)	Reporting results of opacity or visible emission observations.	No	Subpart WWWW of part 63 does not contain opacity or visible emission standards.
§ 63.10(d)(4)	Progress reports as part of extension of compliance.	Yes	
§ 63.10(d)(5)	Startup, shutdown, and malfunction reports.	No	
§ 63.10(e)(1) through (3)	Additional reporting requirements for CMS.	Yes	This section applies if you have an add-on control device and elect to use a CEM to demonstrate continuous compliance with an emission limit.
§ 63.10(e)(4)	Reporting COMS data	No	Subpart WWWW of part 63 does not contain opacity standards.
§ 63.10(f)	Waiver for recordkeeping or reporting.	Yes	
§ 63.11	Control device requirements	Yes	Only applies if you elect to use a flare as a control device.
§ 63.12	State authority and delegations	Yes	
§ 63.13	Addresses of state air pollution control agencies and EPA Regional offices.	Yes	
§ 63.14	Incorporations by reference	Yes	
§ 63.15	Availability of information and confidentiality.	Yes	

sfrattini on LAPJZKW1R2 with $$_JOB
VerDate Sep<11>2014 09:16 Apr 04, 2023 Jkt 256165 PO 00000 Frm 01265 Fmt 8010 Sfmt 8026 Q:\40\256165.XXX PC31

[85 FR 15979, Mar. 20, 2020, as amended at 85 FR 73911, Nov. 19, 2020]

APPENDIX A TO SUBPART WWWW OF PART 63—TEST METHOD FOR DETERMINING VAPOR SUPPRESSANT EFFECTIVENESS

1. Scope and Application

1.1 *Applicability*. If a facility is using vapor suppressants to reduce hazardous air pollutant (HAP) emissions, the organic HAP emission factor equations in Table 1 to this subpart require that the vapor suppressant effectiveness factor be determined. The vapor suppressant effectiveness factor is then used as one of the inputs into the appropriate organic HAP emission factor equation. The vapor suppressant effectiveness factor test is not intended to quantify overall volatile emissions from a resin, nor to be used as a stand-alone test for emissions determination. This test is designed to evaluate the performance of film forming vapor suppressant resin additives. The results of this test are used only in combination with the organic HAP emissions factor equations in Table 1 to this subpart to generate emission factors.

1.1.1 The open molding process consists of application of resin and reinforcements to the mold surface, followed by a manual roll-out process to consolidate the laminate, and the curing stage where the laminate surface is not disturbed. Emission studies have shown that approximately 50 percent to 55 percent of the emissions occur while the resin is being applied to the mold. Vapor suppressants have little effect during this portion of the lamination process, but can have a significant effect during the curing stage. Therefore, if a suppressant is 100 percent effective, the overall emissions from the process would be reduced by 45 percent to 50 percent, representing the emissions generated during the curing stage. In actual practice, vapor suppressant effectiveness will be less than 100 percent and the test results determine the specific effectiveness in terms of the vapor suppressant effectiveness factor. This factor represents the effectiveness of a specific combination of suppressant additive and resin formulation.

1.1.2 A resin manufacturer may supply a molder with a vapor-suppressed resin, and employ this test to provide the molder with the vapor suppressant effectiveness factor for that combination of resin and vapor suppressant. The factor qualifies the effectiveness of the vapor suppressant when the resin is tested in the specific formulation supplied to the molder. The addition of fillers or other diluents by the molder may impact the effectiveness of the vapor suppressant. The formulation, including resin/glass ratio and filler content, used in the test should be similar to the formulation to be used in production. The premise of this method is to compare laminate samples made with vapor suppressant additive and made without the additive. The difference in emissions between the two yields the vapor suppressant effectiveness factor.

1.1.3 The method uses a mass balance determination to establish the relative loss of the volatile component from unsaturated polyester or vinyl ester resins, with and without vapor suppressant additives. The effectiveness of a specific vapor suppressant and resin mixture is determined by comparing the relative volatile weight losses from vapor suppressed and non-suppressed resins. The volatile species are not separately analyzed. While the species contained in the volatile component are not determined, an extended listing of potential monomer that may be contained in unsaturated polyester or vinyl ester resins is provided in Table 1.1. However, most polyester and vinyl ester resin formulations presently used by the composites industry only contain styrene monomer.

TABLE 1.1—LIST OF MONOMERS POTENTIALLY PRESENT IN UNSATURATED POLYESTER/VINYL ESTER RESINS

Monomer	CAS No.
Styrene	100–42–5.
Vinyl toluene	25013–15–4.
Methyl methacrylate	80–62–6.
Alpha methyl styrene	98–83–9.
Para methyl styrene	Vinyl toluene isomer.
Chlorostyrene	1331–28–8.
Diallyl phthalate	131–17–9.
Other volatile monomers	Various.

2. Summary of Method

2.1 Differences in specific resin and suppressant additive chemistry affect the performance of a vapor suppressant. The purpose of this method is to quantify the effectiveness of a specific combination of vapor suppressant and unsaturated polyester or vinyl ester resin as they are to be used in production. This comparative test quantifies the loss of volatiles from a fiberglass reinforced laminate during the roll-out and curing emission phases, for resins formulated with and without a suppressant additive. A criterion for this method is the testing of a non-vapor suppressed resin system and testing the same resin with a vapor suppressant. The two resins are as identical as possible with the exception of the addition of the suppressant to one. The exact formulation used for the test will be determined by the in-use production requirements. Each formulation

sfrattini on LAPJZKW1R2 with $$_JOB
VerDate Sep<11>2014 09:16 Apr 04, 2023 Jkt 256165 PO 00000 Frm 01266 Fmt 8010 Sfmt 8002 Q:\40\256165.XXX PC31

of resin, glass, fillers, and additives is developed to meet particular customer and or performance specifications.

2.2 The result of this test is used as an input factor in the organic HAP emissions factor equations in Table 1 to this subpart, which allows these equations to predict emissions from a specific combination of resin and suppressant. This test does not provide an emission rate for the entire lamination process.

3. Definitions and Acronyms

3.1 Definitions

3.1.1 *Vapor suppressant*. An additive that inhibits the evaporation of volatile components in unsaturated polyester or vinyl ester resins.

3.1.2 *Unsaturated polyester resin*. A thermosetting resin commonly used in composites molding.

3.1.3 *Unsaturated vinyl ester resin*. A thermosetting resin used in composites molding for corrosion resistant and high performance applications.

3.1.4 *Laminate*. A combination of fiber reinforcement and a thermoset resin.

3.1.5 *Chopped strand mat*. Glass fiber reinforcement with random fiber orientation.

3.1.6 *Initiator*. A curing agent added to an unsaturated polyester or vinyl ester resin.

3.1.7 *Resin application roller*. A tool used to saturate and compact a wet laminate.

3.1.8 *Gel time*. The time from the addition of initiator to a resin to the state of resin gelation.

3.1.9 *Filled resin system*. A resin, which includes the addition of inert organic or inorganic materials to modify the resin properties, extend the volume and to lower the cost. Fillers include, but are not limited to; mineral particulates; microspheres; or organic particulates. This test is not intended to be used to determine the vapor suppressant effectiveness of a filler.

3.1.10 *Material safety data sheet*. Data supplied by the manufacturer of a chemical product, listing hazardous chemical components, safety precautions, and required personal protection equipment for a specific product.

3.1.11 *Tare(ed)*. Reset a balance to zero after a container or object is placed on the balance; that is to subtract the weight of a container or object from the balance reading so as to weigh only the material placed in the container or on the object.

3.1.12 *Percent glass*. The specified glass fiber weight content in a laminate. It is usually determined by engineering requirements for the laminate.

3.2 Acronyms:

3.2.1 *VS*—vapor suppressed or vapor suppressant.

3.2.2 *NVS*—non-vapor suppressed.

3.2.3 *VSE*—vapor suppressant effectiveness.

3.2.4 *VSE Factor*—vapor suppressant effectiveness, factor used in the equations in Table 1 to this subpart.

3.2.5 *CSM*—chopped strand mat.

3.2.6 *MSDS*—material safety data sheet.

4. Interferences

There are no identified interferences which affect the results of this test.

5. Safety

Standard laboratory safety procedures should be used when conducting this test. Refer to specific MSDS for handling precautions.

6. Equipment and Supplies

NOTE: Mention of trade names or specific products or suppliers does not constitute an endorsement by the Environmental Protection Agency.

6.1 Required Equipment.

6.1.1 Balance enclosure.[1]

6.1.2 Two (2) laboratory balances—accurate to ±0.01g.[2]

6.1.3 Stop watch or balance data recording output to data logger with accuracy ±1 second.[3]

6.1.4 Thermometer—accurate to ±2.0 °F(±1.0 °C).[4]

6.1.5 A lipped pan large enough to hold the cut glass without coming into contact with the vertical sides, *e.g.* a pizza pan.[5]

6.1.6 Mylar film sufficient to cover the bottom of the pan.[6]

6.1.7 Tape to keep the Mylar from shifting in the bottom of the pan.[7]

6.1.8 Plastic tri-corner beakers of equivalent—250 ml to 400 ml capacity.[8]

6.1.9 Eye dropper or pipette.[9]

6.1.10 Disposable resin application roller, 3/16″–3/4″ diameter × 3″–6″ roller length.[10]

6.1.11 Hygrometer or psychrometer[11] accurate to ±5 percent

6.1.12 Insulating board, (Teflon, cardboard, foam board etc.) to prevent the balance from becoming a heat sink.[12]

6.2 Optional Equipment.

6.2.1 Laboratory balance—accurate to ±.01g with digital output, such as an RS–232 bi-directional interface[13] for use with automatic data recording devices.

6.2.2 Computer with recording software configured to link to balance digital output. Must be programmed to record data at the minimum intervals required for manual data acquisition.

6.3 Supplies.

6.3.1 Chopped strand mat—1.5 oz/ft.^{2} [14]

7. Reagents and Standards

7.1 *Initiator*. The initiator type, brand, and concentration will be specified by resin manufacturer, or as required by production operation.

7.2 Polyester or vinyl ester resin.

sfrattini on LAPJZKW1R2 with $$_JOB
VerDate Sep<11>2014 09:16 Apr 04, 2023 Jkt 256165 PO 00000 Frm 01267 Fmt 8010 Sfmt 8002 Q:\40\256165.XXX PC31

7.3 Vapor suppressant additive.

8. Sample Collection, Preservation, and Storage

This test method involves the immediate recording of data during the roll out and curing phases of the lamination process during each test run. Samples are neither collected, preserved, nor stored.

9. Quality Control

Careful attention to the prescribed test procedure, routing equipment calibration, and replicate testing are the quality control activities for this test method. Refer to the procedures in section 11. A minimum of six test runs of a resin system without a suppressant and six test runs of the same resin with a suppressant shall be performed for each resin and suppressant test combination.

10. Calibration and Standardization

10.1 The laboratory balances, stopwatch, hygrometer and thermometer shall be maintained in a state of calibration prior to testing and thereafter on a scheduled basis as determined by the testing laboratory. This shall be accomplished by using certified calibration standards.

10.2 Calibration records shall be maintained for a period of 3 years.

11. Test Procedure

11.1 Test Set-up.

11.1.1 The laboratory balance is located in an enclosure to prevent fluctuations in balance readings due to localized air movement. The front of enclosure is open to permit work activity, but positioned so that local airflow will not effect balance readings. The ambient temperature is determined by suspending the thermometer at a point inside the enclosure.

11.1.2 The bottom of the aluminum pan is covered with the Mylar film. The film is held in position with tape or by friction between the pan and the film.

11.1.3 The resin and pan are brought to room temperature. This test temperature must be between 70 °F and 80 °F. The testing temperature cannot vary more than ±2 °F during the measurement of test runs. Temperature shall be recorded at the same time weight is recorded on suppressed and non-suppressed test data sheets, shown in Table 17.1.

11.1.4 The relative humidity may not change more than ±15 percent during the test runs. This is determined by recording the relative humidity in the vicinity of the test chamber at the beginning and end of an individual test run. This data is recorded on the test data sheets shown in Table 17.1.

11.1.5 Two plies of nominal 1.5 oz/ft^2 chopped strand mat (CSM) are cut into a square or rectangle with the minimum surface area of 60 square inches (*i.e.* a square with a side dimension of 7.75 inches).

11.1.6 The appropriate resin application roller is readily available.

11.2 Resin Gel Time/Initiator Percentage

11.2.1 Previous testing has indicated that resin gel time influences the emissions from composite production. The testing indicated that longer the gel times led to higher emissions. There are a number of factors that influence gel time including initiator type, initiator brand, initiator level, temperature and resin additives. Under actual usage conditions a molder will adjust the initiator to meet a gel time requirement. In this test procedure, the vapor suppressed and non-vapor suppressed resin systems will be adjusted to the same gel time by selecting the appropriate initiator level for each.

11.2.2 All test runs within a test will be processed in a manner that produces the same resin gel time ±2 minutes. To facilitate the resin mixing procedure, master batches of resin and resin plus vapor suppressant of resin are prepared. These resin master batches will have all of the required ingredients except initiator; this includes filler for filled systems. The gel times for the tests are conducted using the master batch and adjustments to meet gel time requirements shall be made to the master batch before emission testing is conducted. Test temperatures must be maintained within the required range, during gel time testing. Further gel time testing is not required after the non-vapor suppressed and vapor suppressed master batches are established with gel times within ±2 minutes. A sufficient quantity of each resin should be prepared to allow for additional test specimens in the event one or more test fails to meet the data acceptance criteria discussed in Section 11.5 and shown in Table 17.2.

11.2.3 The specific brand of initiator and the nominal percentage level recommended by the resin manufacturer will be indicated on the resin certificate of analysis[15]; or, if a unique gel time is required in a production laminate, initiator brand and percentage will be determined by that specific requirement.

11.2.4 Examples:

11.2.4.1 The resin for a test run is specified as having a 15-minute cup gel time at 77 °F using Brand X initiator at 1.5 percent by weight. The non-suppressed control resin has a 15-minute gel time. The suppressed resin has a gel time of 17-minutes. An initiator level of 1.5 percent would be selected for the both the non-suppressed and the suppressed test samples.

11.2.4.2 Based on a specific production requirement, a resin is processed in production using 2.25 percent of Brand Y initiator, which produces a 20-minute gel time. This initiator at level of 2.25 percent produces a 20

sfrattini on LAPJZKW1R2 with $$_JOB
VerDate Sep<11>2014 09:16 Apr 04, 2023 Jkt 256165 PO 00000 Frm 01268 Fmt 8010 Sfmt 8002 Q:\40\256165.XXX PC31

minute gel time for the non-suppressed control resin, but yields a 25-minute gel time for the suppressed resin sample. The suppressed resin is retested at 2.50 percent initiator and produces a 21-minute gel time. The initiator levels of 2.25 percent and 2.50 percent respectively would yield gel times within ±2 minutes.

11.3 Test Run Procedure for Unfilled Resin (see the data sheet shown in Table 17.1).

11.3.1 The insulating board is placed on the balance.

11.3.2 The aluminum pan with attached Mylar film is placed on the balance, and the balance is tared (weight reading set to zero with the plate on the balance.)

11.3.3 Place two plies of 1.5 oz. CSM on the balance and record the weight (glass weight).

11.3.4 The resin beaker and stirring rod are put on the second balance and tared.

11.3.5 The required resin weight and initiator weight are calculated (refer to calculation formulas in 12.2).

11.3.6 The disposable resin application roller is placed on the edge of the plate.

11.3.7 The balance is tared, with the aluminum pan, Mylar film, glass mat, and resin application roller on the balance pan.

11.3.8 Resin is weighed into a beaker, as calculated, using the second balance. The mixing stick should be tared with the beaker weight.

11.3.9 Initiator is weighed into the resin, as calculated, using an eyedropper or a pipette, and the combination is mixed.

11.3.10 Initiated resin is poured on chopped strand mat in a pe-determined pattern (see Figure 11.6).

11.3.11 A stopwatch is started from zero.

11.3.12 The initial laminate weight is recorded.

11.3.13 The plate is removed from balance to enable roll-out of the laminate.

11.3.14 The wet laminate is rolled with the resin application roller to completely distribute the resin, saturate the chopped strand mat, and eliminate air voids. Roll-out time should be in the range of 2 to 3^{16} minutes and vary less than ±10 percent of the average time required for the complete set of six suppressed and six non-suppressed runs.

11.3.15 Record the rollout end time (time from start to completion of rollout).

11.3.16 Place the resin application roller on the edge of the plate when rollout is completed.

11.3.17 Place the plate back on the balance pan. Immediately record the weight.

11.3.18 For the first test in a series of six tests, weight is recorded every 5-minute interval (suppressed and non-suppressed). The end of the test occurs when three consecutive equal weights are recorded or a weight gain is observed (the last weight before the increased weight is the end of test weight). For the remaining five tests in the series, after the initial weights are taken, the next weight is recorded 30 minutes before the end of the test, as suggested by the results from the first test. It is likely that the time to reach the end point of a suppressed resin test will be shorter than the time required to complete a non-suppressed test. Therefore, the time to start taking data manually may be different for suppressed and non-suppressed resins.

11.4 Test Run Procedures for Filled Resin Systems[17] Note that the procedure for filled systems differs from the procedure for unfilled systems. With filled systems, resin is applied to one ply of the CSM and the second ply is placed on top of the resin.

11.4.1 The insulating board is placed on the balance.

11.4.2 The aluminum pan with attached Mylar film is placed on the balance, and the balance is tared (weight reading set to zero with the plate on the balance.)

11.4.3 Place two plies of 1.5 oz. CSM on the balance and record the weight (glass weight).

11.4.4 Remove the top ply of fiberglass and record its weight (weight of 1st layer of glass).

11.4.5 The required resin weight and initiator weight are calculated (refer to calculation formulas in 12.2). Calculate the weight of filled resin and initiator based on the 2 layers of fiberglass.

11.4.6 The resin beaker and stirring rod are put on the second balance and tared.

11.4.7 A disposable resin application roller is placed on the edge of the plate.

11.4.8 The balance is tared, with the aluminum pan, Mylar film, glass mat, and resin application roller on the balance pan.

11.4.9 Resin is weighed into the beaker, as calculated, using the second balance. The mixing stick should be tared with the beaker weight.

11.4.10 Initiator is weighed into the resin, as calculated, using an eyedropper or a pipette, and the combination is mixed.

11.4.11 Initiated resin is poured on the single ply of CSM in a pre-determined pattern. Refer to Figure 11.6.

11.4.12 A stopwatch is started from zero.

11.4.13 Record the weight of the resin ans single ply of CSM (L_1). The initial laminate weight equals L_1 plus the weight of second glass layer.

11.4.14 Replace the second layer of fiberglass.

11.4.15 Remove the plate from the balance to allow roll-out of the laminate.

11.4.16 Roll the wet laminate with the resin application roller to completely distribute the resin, saturate the chopped strand mat, and eliminate air voids. Roll-out time should be in the range of 2 to 3^{16} minutes and vary less than ±10 percent of the average time required for the complete set of six suppressed and six non-suppressed runs.

sfrattini on LAPJZKW1R2 with $$_JOB
VerDate Sep<11>2014 09:16 Apr 04, 2023 Jkt 256165 PO 00000 Frm 01269 Fmt 8010 Sfmt 8002 Q:\40\256165.XXX PC31

11.4.17 Record the roll-out end time (time from start to completion of rollout).

11.4.18 Place the resin application roller on the edge of the plate when rollout is completed.

11.4.19 Place the plate back on the balance pan. The initial weight is recorded immediately.

11.4.20 For the first test run in a series of six, weight is recorded at every 5-minute interval (suppressed and non-suppressed). The end of the test occurs when three consecutive equal weights are recorded or a weight gain is observed (the last weight before the increased weight is the end of test weight). For the remaining five tests in the series, after the initial weights are taken, the next weight is recorded 30 minutes before the end of the test, as suggested by the results from the first test. It is likely that the time to reach the end point of a suppressed resin test will be shorter than the time required to complete a non-suppressed test. Therefore, the time to start taking data manually may be different for suppressed and non-suppressed resins.

11.5 Data Acceptance Criteria:

11.5.1 A test set is designed as twelve individual test runs using the same resin, initiator, and gel time, six of the test runs use the resin non-vapor suppressed and the other six use it vapor suppressed.

11.5.2 If a test run falls outside any of the time, temperature, weight or humidity variation requirements, it must be discarded and run again.

11.5.3 The laminate roll out time for each individual test run must vary less than ±10 percent of the average time required for the complete set of six suppressed and six non-suppressed runs.

11.5.4 Test temperature for each test run must be maintained within ±2 °F and the average must be between 70° and 80 °F. Refer to 11.1.3.

11.5.5 The difference in the amount of resin for each run must be within ±10 percent of the average weight for the complete set of six suppressed and six non-suppressed runs.

11.5.6 The relative humidity from each test run must be within ±15 percent of the average humidity for the complete set of six suppressed and six non-suppressed tests. Refer to 11.1.4

11.5.7 The glass content for each test set must be within ±10 percent of the average resin-to-/glass ratio for the complete set of six suppressed and six non-suppressed runs. Refer to 12.2).

11.5.8 The filler content for each test of a test set must be within ±5 percent of the average filler content for the complete set of six suppressed and six non-suppressed runs. Refer to 12.2.

11.6 Resin Application Pour Pattern:

11.6.1 To facilitate the distribution of resin across the chopped strand mat, and to provide consistency from test to test, a uniform pour pattern should be used. A typical pour pattern is shown below:

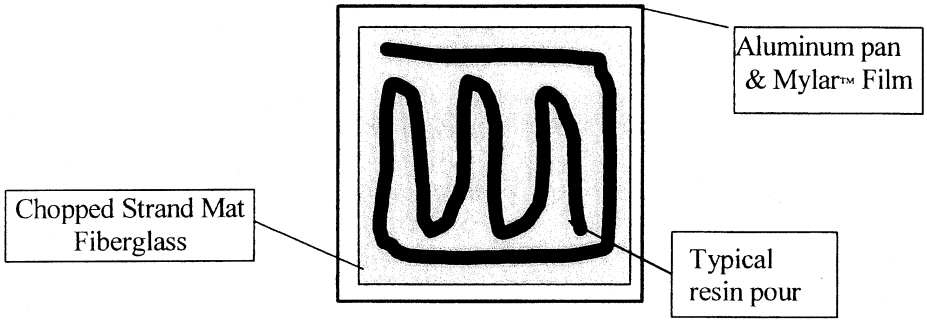

Figure 11.6 Resin Distribution Diagram

sfrattini on LAPJZKW1R2 with $$_JOB
VerDate Sep<11>2014 09:16 Apr 04, 2023 Jkt 256165 PO 00000 Frm 01270 Fmt 8010 Sfmt 8006 Q:\40\256165.XXX PC31
ER21AP03.009</GPH>

11.6.2 The resin is to be evenly distributed across the entire surface of the chopped strand mat using the resin application roller to achieve a wet look across the surface of the laminate. Pushing excess resin off the reinforcement and onto the Mylar sheet should be avoided. No resin is to be pushed more than ½ inch beyond the edge of the glass mat. If excess resin is pushed further from the glass mat, it will void the test run. As part of this process, typical visible air voids are to be eliminated by the rollout process. If the pour pattern is different from the above, it must be recorded and attached to test data sheet 17.1.

12. Data Analysis and Calculations

12.1 Data Analysis:

This test method requires a simple mass balance calculation, no special data analysis is necessary.

12.2 Calculations:

12.2.1 The target glass content (percent) for unfilled resin systems is determined from the specific production parameters being evaluated. In absence of any specific production requirements the target may be set at the tester's discretion.

12.2.2 Glass content determination (expressed as a per cent):

% Glass = Glass wt(g)/(Glass wt(g) + Resin weight (g))

12.2.3 Weight of resin required:

Resin weight required = (Glass wt (g)/% glass)—Glass wt (g)

12.2.4 Filled resin formulation determination for filled resin systems (*e.g.* >30 percent filler by weight for a particulate filler, or >1 percent by weight for a lightweight filler, such as hollow microspheres):

% Resin content = resin weight(g)/(resin weight(g) + glass weight(g) + filler weight(g))

% Glass content = glass weight(g)/(resin weight(g) + glass weight(g) + filler weight(g))

Filler content = filler weight(g)/(resin weight(g) + glass weight(g) + filler weight(g))

12.2.5 Initiator weight determination:

Initiator weight (g) = Resin weight(g) × Initiator %

12.2.6 Emission weight loss determination:

Emissions weight loss (g) = Initial resin weight (g) − Final resin weight (g)

12.2.7 % Emission weight loss:

% Emission Weight Loss = (Emission weight loss (g) Initial resin weight (g) × 100

12.2.8 Average % Emission Weight Loss (assuming six test runs):

$$\text{Average \% Emission Weight Loss} = \sum_{i}^{N=6}\left(\text{\% Emission Weight Loss}_i\right)/6$$

12.2.9 VSE Factor calculation:

VSE Factor = 1 −(Average % VS Emission Weight Loss/Average NVS Emission Weight Loss)

TABLE 12.1—EXAMPLE CALCULATION

Test #	% VS weight loss	% NVS weight loss
1	6.87	10.86
2	6.76	11.23
3	5.80	12.02
4	5.34	11.70
5	6.11	11.91
6	6.61	10.63
Average Weight Loss	6.25	11.39
VSE Factor	.....	0.4

VSE Factor = 0.45

VSE Factor is used as input into the appropriate equation in Table 1 to this subpart.

Example from Table 1 to this subpart:

Manual Resin Application, 35 percent HAP resin, VSE Factor of 0.45

HAP Emissions with vapor suppresants = ((0.286 × %HAP) − 0.0529) × 2000 × (1–(0.5 × VSE factor))

HAP Emissions with vapor suppresants = ((0.286 × .35) − 0.0529) × 2000 × (1 − (0.5 × .45))

HAP Emissions with vapor suppresants = 73 pounds of HAP emissions per ton of resin.

13. Method Performance

13.1 Bias:

The bias of this test method has not been determined.

13.2 Precision Testing

13.2.1 Subsequent to the initial development of this test protocol by the Composites Fabricators Association, a series of tests were conducted in three different laboratory facilities. The purpose of this round robin testing was to verify the precision of the test method in various laboratories. Each laboratory received a sample of an orthophthalic polyester resin from the same production batch, containing 48 per cent styrene by weight. Each testing site was also provided with the same vapor suppressant additive.

sfrattini on LAPJZKW1R2 with $$_JOB
VerDate Sep<11>2014 09:16 Apr 04, 2023 Jkt 256165 PO 00000 Frm 01271 Fmt 8010 Sfmt 8002 Q:\40\256165.XXX PC31
ER21AP03.010</MATH>

The suppressant manufacturer specified the percentage level of suppressant additive. The resin manufacturer specified the type and level of initiator required to produce a 20 minute gel time. The target glass content was 30 percent by weight.

13.2.2 Each laboratory independently conducted the VSE test according to this method. A summary of the results is included in Table 13.1.

TABLE 13.1—ROUND ROBIN TESTING RESULTS

	Test Lab 1		Test Lab 2		Test Lab 3	
	NVS	VS	NVS	S	NVS	VS
Average percent WT Loss	4.24	1.15	4.69	1.84	5.73	1.61
Standard Deviation	0.095	0.060	0.002	0.002	0.020	0.003
VSE Factor	.....	0.730	.....	0.607	.....	0.720

13.3 Comparison to EPA Reference Methods This test has no corresponding EPA reference method.

14. Pollution Prevention

The sample size used in this method produces a negligible emission of HAP, and has an insignificant impact upon the atmosphere.

15. Waste Management

The spent and waste materials generated during this test are disposed according to required facility procedures, and waste management recommendations on the corresponding material safety data sheets.

16. References and footnotes

16.1 Footnotes:

[1] Balance Enclosure—The purpose of the balance enclosure is to prevent localized airflow from adversely affecting the laboratory balance. The enclosure may be a simple three-sided box with a top and an open face. The configuration of the enclosure is secondary to the purpose of providing a stable and steady balance reading, free from the effects of airflow, for accurate measurements. The enclosure can be fabricated locally. A typical enclosure is shown in Figure 17.1.

[2] Laboratory Balance—Ohaus Precision Standard Series P/N TS400D or equivalent—Paul N. Gardner Co. 316 NE 1st St. Pompano Beach, FL 33060 or other suppliers.

[3] Stop Watch—Local supply.

[4] Thermometer—Mercury thermometer—ASTM No. 21C or equivalent; Digital thermometer—P/N TH–33033 or equivalent—Paul N. Gardner Co. 316 NE 1st St. Pompano Beach, FL 33060 or other suppliers.

[5] Aluminum Pan—Local supply.

[6] Mylar—Local supply.

[7] Double Sided Tape—3M Double Stick Tape or equivalent, local supply.

[8] Laboratory Beakers—250 to 400ml capacity—Local laboratory supply.

[9] Eye Dropper or Pipette—Local laboratory supply.

[10] Disposable Resin Application Roller Source—Wire Handle Roller P/N 205–050–300 or Plastic Handle Roller P/N 215–050–300 or equivalent; ES Manufacturing Inc., 2500 26st Ave. North, St. Petersburg, FL 33713, *www.esmfg.com*, or other source. Refer to Figure 17.3.

[11] Hygrometer or Psychrometer—Model# THWD–1, or equivalent—Part # 975765 by Amprobe Instrument, 630 Merrick Road, P.O. Box 329, Lynbrook, NY 11563, 516–593–5600

[12] Insulating Board (Teflon, cardboard, foam board etc.)—Local supply.

[13] Laboratory Balance With Digital Output—Ohaus Precision Standard Series P/N TS120S or equivalent—Paul N. Gardner Co. 316 NE 1st St. Pompano Beach, FL 33060 or other suppliers.

[14] Chopped Strand Mat—1.5 oz/ft^2 Sources: Owens Corning Fiberglas—Fiberglas M–723; PPG Industries—ABM HTX; Vetrotex America—M–127 or equivalent.

[15] Certificate of Analysis: Resin gel time, as recorded on the resin certificate of analysis, is measured using a laboratory standard gel time procedure. This procedure typically uses a 100 gram cup sample at 77 °F (25 °C), a specific type of initiator and a specified percentage.

[16] Roll-out times may vary with resin viscosity or resin additive. The important aspect of this step is to produce the same roll-out time for both the suppressed and non-suppressed samples.

[17] While this test can be used with filled resin systems, the test is not designed to determine the effect of the filler on emissions, but rather to measure the effect of the suppressant additive in the resin system. When evaluating a filled system both the non-vapor suppressed and vapor suppressed samples should be formulated with the same type and level of filler.

16.2 References

1. Phase 1—Baseline Study Hand Lay-up, CFA, 1996

2. CFA Vapor Suppressant Effectiveness Test Development, 4/3/98, correspondence with Dr. Madeleine Strum, EPA, OAQPS

sfrattini on LAPJZKW1R2 with $$_JOB
VerDate Sep<11>2014 09:16 Apr 04, 2023 Jkt 256165 PO 00000 Frm 01272 Fmt 8010 Sfmt 8002 Q:\40\256165.XXX PC31

3. CFA Vapor Suppressant Effectiveness Screening Tests, 4/4/98
4. Styrene Suppressant Systems Study, Reichhold Chemical, 11/30/98
5. Evaluation of the CFA's New Proposed Vapor Suppressant Effectiveness Test, Technical Service Request #: ED–01–98, BYK Chemie, 6/3/98
6. Second Evaluation of the CFA's New Proposed Vapor Suppressant Effectiveness Test, Technical Service Request #: ED–02–98, BYK Chemie, 1/26/99

17. Data Sheets and Figures

17.1 This data sheet, or a similar data sheet, is used to record the test data for filled, unfilled, suppressed and non-suppressed tests. If additional time is required, the data sheet may be extended.

sfrattini on LAPJZKW1R2 with $$_JOB
VerDate Sep<11>2014 09:16 Apr 04, 2023 Jkt 256165 PO 00000 Frm 01273 Fmt 8010 Sfmt 8002 Q:\40\256165.XXX PC31

Table 17.1 Test Data Sheet

Test Number			Test Type		
			VS (_____)		NVS (_____)
Resin			Filled (____)		Unfilled (___)
Initiator				Initiator, %	_____
Vapor Suppressant				VS, %	_____
Weight of 2 layers of glass, g	_____	Weight of 1st glass layer, g	_____	Weight of 2nd glass layer, g	_____
Initial Resin Weight, (g)			Time (Min.)	Weight g	Temp ^{0}F
Glass content, (%)			55		
Initial Temperature ^{0}F:			60		
Initial Humidity %			65		
Resin Initiator Level, %			70		
Resin gel time, (min.)			75		
Resin filler content, %			80		
Roll out time, (min.)			85		
Time, (min.)	Weight, g	Temp, ^{0}F	90		

sfrattini on LAPJZKW1R2 with $$_JOB
VerDate Sep<11>2014 09:16 Apr 04, 2023 Jkt 256165 PO 00000 Frm 01274 Fmt 8010 Sfmt 8006 Q:\40\256165.XXX PC31
ER21AP03.011</GPH>

Initial			95		
			100		
0			105		
5			110		
10			115		
15			120		
20			125		
25			130		
30			135		
35			140		
40			145		
45			150		
50			155		
Final Time, min.	Final Weight, g.		Final Temp, °F	Final Humidity, %	

17.2 Data Acceptance Criteria Worksheet: The following worksheet is used to determine the quality of collected data (*i.e.* insure the data collected all meets acceptance criteria)

sfrattini on LAPJZKW1R2 with $$_JOB
VerDate Sep<11>2014 09:16 Apr 04, 2023 Jkt 256165 PO 00000 Frm 01275 Fmt 8010 Sfmt 8002 Q:\40\256165.XXX PC31
ER21AP03.012</GPH>

TABLE 17.2—DATA ACCEPTANCE CRITERIA WORKSHEET

Test No.	Temperature			Laminate roll out time, min	Relative humidity, %		Resin weight, (g)	Glass content, %	Resin distribution	Meets criteria Y/N
	Min	Max	Delta		Initial	Final				
1										
2										
3										
4										
5										
6										
7										
8										
9										
10										
11										
12										
Criteria	Average ±2 °F	±10% of Average	±15 of Average	±15 of Average	±10% of Avg.	±10% of Avg.	<½ inch off mat	All Y		

sfrattini on LAPJZKW1R2 with $$_JOB
VerDate Sep<11>2014 09:16 Apr 04, 2023 Jkt 256165 PO 00000 Frm 01276 Fmt 8010 Sfmt 8002 Q:\40\256165.XXX PC31

17.3 VSE Factor Calculation

TABLE 17.3—CALCULATIONS WORKSHEET

Vapor suppressed		Non-vapor suppressed	
Test #	% Weight loss	Test #	% Weight loss
Average Weight Loss			
VSE Factor			

VSE Factor = 1—(% Average Weight Loss $_{VS}$/ % Average Weight Loss$_{NVS}$)

17.4 Figures

sfrattini on LAPJZKW1R2 with $$_JOB
VerDate Sep<11>2014 09:16 Apr 04, 2023 Jkt 256165 PO 00000 Frm 01277 Fmt 8010 Sfmt 8002 Q:\40\256165.XXX PC31

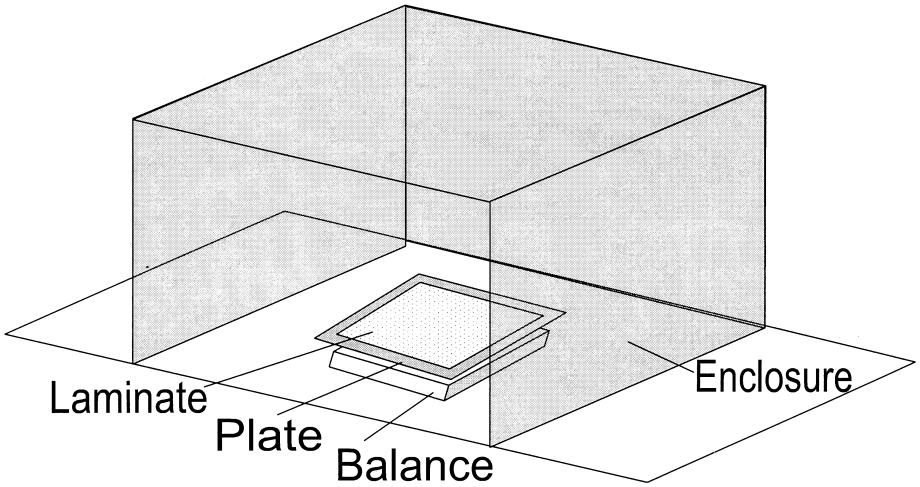

Figure 17.1. Typical Balance Enclosure

sfrattini on LAPJZKW1R2 with $$_JOB
VerDate Sep<11>2014 09:16 Apr 04, 2023 Jkt 256165 PO 00000 Frm 01278 Fmt 8010 Sfmt 8006 Q:\40\256165.XXX PC31
ER21AP03.013</GPH>

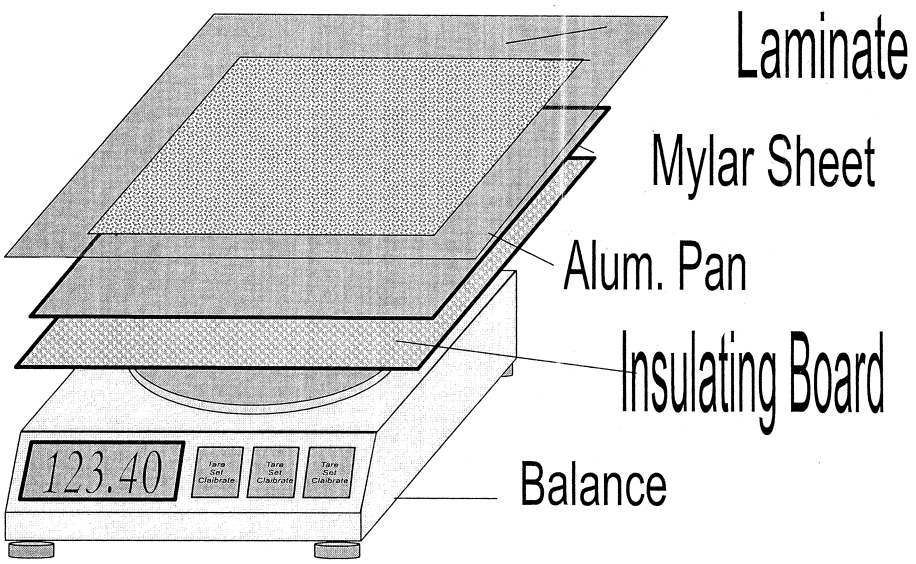

Figure 17.2. Scale, Plate, Insulating Board, Mylar, Laminate Order

sfrattini on LAPJZKW1R2 with $$_JOB
VerDate Sep<11>2014 09:16 Apr 04, 2023 Jkt 256165 PO 00000 Frm 01279 Fmt 8010 Sfmt 8006 Q:\40\256165.XXX PC31
ER21AP03.014</GPH>

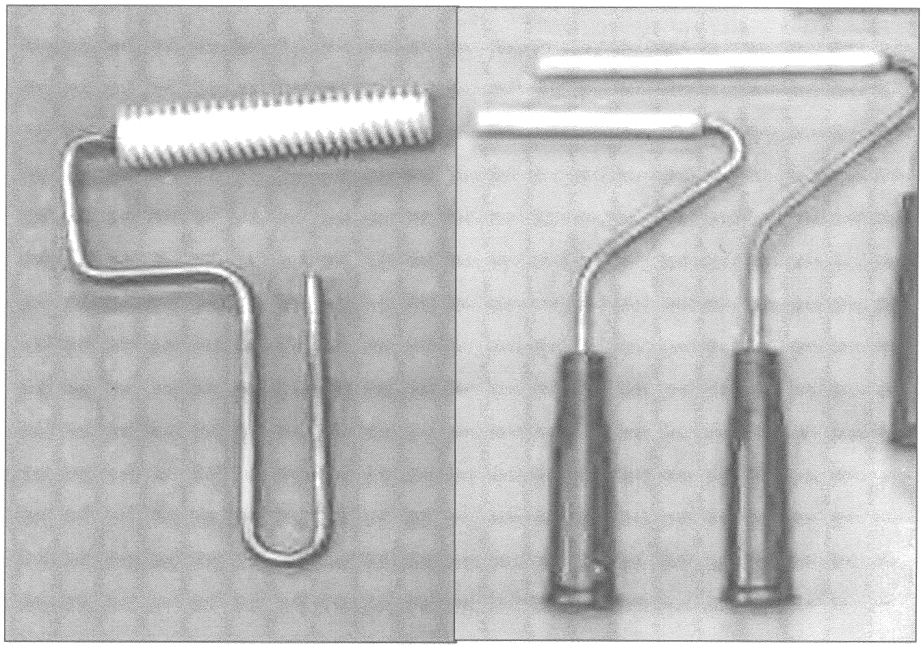

FRP Rollers

Figure 17.3. Typical FRP Rollers

Subpart XXXX—National Emissions Standards for Hazardous Air Pollutants: Rubber Tire Manufacturing

SOURCE: 67 FR 45598, July 9, 2002, unless otherwise noted.

WHAT THIS SUBPART COVERS

§ 63.5980 What is the purpose of this subpart?

This subpart establishes national emission standards for hazardous air pollutants (NESHAP) for rubber tire manufacturing. This subpart also establishes requirements to demonstrate

sfrattini on LAPJZKW1R2 with $$_JOB
VerDate Sep<11>2014 09:16 Apr 04, 2023 Jkt 256165 PO 00000 Frm 01280 Fmt 8010 Sfmt 8010 Q:\40\256165.XXX PC31
ER21AP03.015</GPH>

initial and continuous compliance with the emission limitations.

§ 63.5981 Am I subject to this subpart?

(a) You are subject to this subpart if you own or operate a rubber tire manufacturing facility that is located at, or is a part of, a major source of hazardous air pollutant (HAP) emissions.

(1) Rubber tire manufacturing includes the production of rubber tires and/or the production of components integral to rubber tires, the production of tire cord, and the application of puncture sealant. Components of rubber tires include, but are not limited to, rubber compounds, sidewalls, tread, tire beads, tire cord and liners. Other components often associated with rubber tires but not integral to the tire, such as wheels, inner tubes, tire bladders, and valve stems, are not components of rubber tires or tire cord and are not subject to this subpart.

(2) A major source of HAP emissions is any stationary source or group of stationary sources within a contiguous area and under common control that emits or has the potential to emit considering controls, in the aggregate, any single HAP at a rate of 9.07 megagrams (10 tons) or more per year or any combination of HAP at a rate of 22.68 megagrams (25 tons) or more per year.

(b) You are not subject to this subpart if the affected source at your rubber tire manufacturing facility meets either of the conditions described in paragraph (b)(1) or (2) of this section.

(1) You own or operate a tire cord production affected source, but the primary product produced at the affected source is determined to be subject to another subpart under this part 63 as of the effective date of that subpart (publication date of the final rule) or startup of the source, whichever is later. In this case, you must determine which subpart applies to your source and you must be in compliance with the applicable subpart by the compliance date of that subpart. The primary product is the product that is produced for the greatest operating time over a 5-year period, based on expected utilization for the 5 years following the compliance date or following initial startup of the source, whichever is later.

(2) Your rubber tire manufacturing affected source is a research and development facility whose primary purpose is to conduct research and development into new processes and products, where such source is operated under the close supervision of technically trained personnel and is not engaged in the manufacture of products for commercial sale in commerce, except in a de minimis manner.

§ 63.5982 What parts of my facility does this subpart cover?

(a) This subpart applies to each existing, new, or reconstructed affected source at facilities engaged in the manufacture of rubber tires or their components.

(b) The affected sources are defined in paragraph (b)(1) of this section (tire production), paragraph (b)(2) of this section (tire cord production), paragraph (b)(3) of this section (puncture sealant application), and paragraph (b)(4) of this section (rubber processing).

(1) The tire production affected source is the collection of all processes that use or process cements and solvents as defined in § 63.6015, located at any rubber tire manufacturing facility. It includes, but is not limited to: Storage and mixing vessels and the transfer equipment containing cements and/or solvents; wastewater handling and treatment operations; tread and cement operations; tire painting operations; ink and finish operations; undertread cement operations; process equipment cleaning materials; bead cementing operations; tire building operations; green tire spray operations; extruding, to the extent cements and solvents are used; cement house operations; marking operations; calendar operations, to the extent solvents are used; tire striping operations; tire repair operations; slab dip operations; other tire building operations, to the extent that cements and solvents are used; and balance pad operations.

(2) The tire cord production affected source is the collection of all processes engaged in the production of tire cord. It includes, but is not limited to: dipping operations, drying ovens, heat-set

sfrattini on LAPJZKW1R2 with $$_JOB
VerDate Sep<11>2014 09:16 Apr 04, 2023 Jkt 256165 PO 00000 Frm 01281 Fmt 8010 Sfmt 8010 Q:\40\256165.XXX PC31

ovens, bulk storage tanks, mixing facilities, general facility vents, air pollution control devices, and warehouse storage vents.

(3) The puncture sealant application affected source is the puncture sealant application booth operation used to apply puncture sealant to finished tires.

(4) The rubber processing affected source is the collection of all rubber mixing processes (e.g., banburys and associated drop mills) that either mix compounds or warm rubber compound before the compound is processed into components of rubber tires. The mixed rubber compound itself is also included in the rubber processing affected source. There are no emission limitations or other requirements for the rubber processing affected source.

(c) An affected source is a new affected source if construction of the affected source commenced after October 18, 2000, and it met the applicability criteria of § 63.5981 at the time construction commenced.

(d) An affected source is reconstructed if it meets the criteria as defined in § 63.2.

(e) An affected source is existing if it is not new or reconstructed.

§ 63.5983 When do I have to comply with this subpart?

(a) If you have a new or reconstructed affected source, except as provided in §§ 63.5982(b)(4) and 63.5981(b)(1), you must comply with the emission limitations for new and reconstructed sources in this subpart upon startup.

(b) If you have an existing affected source, you must comply with the emission limitations for existing sources no later than July 11, 2005.

(c) If you have an area source that increases its emissions or its potential to emit such that it becomes a major source of HAP, the affected source(s) must be in compliance with existing source emission limitations no later than 3 years after the date on which the area source became a major source.

(d) You must meet the notification requirements in § 63.6009 according to the schedule in § 63.6009 and in subpart A of this part. Some of the notifications must be submitted before the date you are required to comply with the emission limitations in this subpart.

EMISSION LIMITS FOR TIRE PRODUCTION AFFECTED SOURCES

§ 63.5984 What emission limits must I meet for tire production affected sources?

You must meet each emission limit in either option 1 or option 2 of Table 1 to this subpart that applies to you.

§ 63.5985 What are my alternatives for meeting the emission limits for tire production affected sources?

You must use one of the compliance alternatives in paragraphs (a) through (c) of this section to meet either of the emission limits in § 63.5984.

(a) *Purchase alternative.* Use only cements and solvents that, as purchased, contain no more HAP than allowed by the emission limits in Table 1 to this subpart, option 1 (HAP constituent option).

(b) *Monthly average alternative, without using an add-on control device.* Use cements and solvents in such a way that the monthly average HAP emissions do not exceed the emission limits in Table 1 to this subpart, option 1 or option 2.

(c) *Monthly average alternative, using an add-on control device.* Use a control device to reduce HAP emissions so that the monthly average HAP emissions do not exceed the emission limits in Table 1 to this subpart, option 1 or option 2.

EMISSION LIMITS FOR TIRE CORD PRODUCTION AFFECTED SOURCES

§ 63.5986 What emission limits must I meet for tire cord production affected sources?

You must meet each emission limit in either option 1 or option 2 of Table 2 to this subpart that applies to you.

§ 63.5987 What are my alternatives for meeting the emission limits for tire cord production affected sources?

You must use one of the compliance alternatives in paragraph (a) or (b) of this section to meet the emission limits in § 63.5986.

(a) *Monthly average alternative, without using an add-on control device.* Use

sfrattini on LAPJZKW1R2 with $$_JOB
VerDate Sep<11>2014 09:16 Apr 04, 2023 Jkt 256165 PO 00000 Frm 01282 Fmt 8010 Sfmt 8010 Q:\40\256165.XXX PC31

coatings in such a way that the monthly average HAP emissions do not exceed the emission limits in Table 2 to this subpart.

(b) *Monthly average alternative, using an add-on control device.* Use a control device to reduce HAP emissions so that the monthly average HAP emissions do not exceed the emission limits in Table 2 to this subpart.

EMISSION LIMITATIONS FOR PUNCTURE SEALANT APPLICATION AFFECTED SOURCES

§ 63.5988 What emission limitations must I meet for puncture sealant application affected sources?

(a) You must meet each emission limit in either option 1 or option 2 of Table 3 to this subpart that applies to you.

(b) If you use an add-on control device to meet the emission limits in Table 3 to this subpart, you must also meet each operating limit in Table 4 to this subpart that applies to you.

§ 63.5989 What are my alternatives for meeting the emission limitations for puncture sealant application affected sources?

You must use one of the compliance alternatives in paragraphs (a) through (d) of this section to meet the emission limitations in § 63.5988.

(a) *Overall control efficiency alternative.* Use an emissions capture system and control device and demonstrate that the application booth emissions meet the emission limits in Table 3 to this subpart, option 1a or 1b, and the control device and capture system meet the operating limits in Table 4 to this subpart.

(b) *Permanent total enclosure and control device efficiency alternative.* Use a permanent total enclosure that satisfies the Method 204 criteria in 40 CFR part 51, appendix M. Demonstrate that the control device meets the emission limits in Table 3 to this subpart, option 1a or 1b. You must also show that the control device and capture system meet the operating limits in Table 4 to this subpart.

(c) *Monthly average alternative, without using an add-on control device.* Use puncture sealants in such a way that the monthly average HAP emissions do not exceed the emission limits in Table 3 to this subpart, option 2.

(d) *Monthly average alternative, using an add-on control device.* Use a control device to reduce HAP emissions so that monthly average HAP emissions do not exceed the emission limits in Table 3 to this subpart, option 2.

GENERAL COMPLIANCE REQUIREMENTS

§ 63.5990 What are my general requirements for complying with this subpart?

(a) Before January 21, 2021, you must be in compliance with the applicable emission limitations specified in Tables 1 through 4 to this subpart at all times, except during periods of startup, shutdown, and malfunction if you are using a control device to comply with an emission limit. After January 20, 2021, you must be in compliance with the applicable emission limitations specified in Tables 1 through 4 to this subpart at all times.

(b) Before January 21, 2021, except as provided in § 63.5982(b)(4), you must always operate and maintain your affected source, including air pollution control and monitoring equipment, according to the provisions in § 63.6(e)(1)(i). After January 20, 2021, at all times, you must operate and maintain any affected source, including associated air pollution control equipment and monitoring equipment, in a manner consistent with safety and good air pollution control practices for minimizing emissions. The general duty to minimize emissions does not require you to make any further efforts to reduce emissions if levels required by the applicable standard have been achieved. Determination of whether a source is operating in compliance with operation and maintenance requirements will be based on information available to the Administrator which may include, but is not limited to, monitoring results, review of operation and maintenance procedures, review of operation and maintenance records, and inspection of the source.

(c) During the period between the compliance date specified for your source in § 63.5983 and the date upon

sfrattini on LAPJZKW1R2 with $$_JOB
VerDate Sep<11>2014 09:16 Apr 04, 2023 Jkt 256165 PO 00000 Frm 01283 Fmt 8010 Sfmt 8010 Q:\40\256165.XXX PC31

which continuous compliance monitoring systems (CMS) have been installed and validated and any applicable operating limits have been set, you must maintain a log detailing the operation and maintenance of the process and emission control equipment.

(d) Before January 21, 2021, for each affected source that complies with the emission limits in Tables 1 through 3 to this subpart using a control device, you must develop a written startup, shutdown, and malfunction plan according to the provisions in § 63.6(e)(3). After January 20, 2021, a startup, shutdown, and malfunction plan is not required.

(e) For each monitoring system required in this section, you must develop and submit for approval a site-specific monitoring plan that addresses the requirements in paragraphs (e)(1) through (3) of this section as follows:

(1) Installation of the CMS sampling probe or other interface at a measurement location relative to each affected process unit so that the measurement is representative of control of the exhaust emissions (*e.g.,* on or downstream of the last control device);

(2) Performance and equipment specifications for the sample interface, the pollutant concentration or parametric signal analyzer, and the data collection and reduction system; and

(3) Performance evaluation procedures and acceptance criteria (*e.g.,* calibrations).

(f) Before January 21, 2021, in your site-specific monitoring plan, you must also address the ongoing procedures specified in paragraphs (f)(1) through (3) of this section as follows. After January 20, 2021, in your site-specific monitoring plan, you must also address the ongoing procedures specified in paragraphs (f)(1) through (4) of this section as follows.

(1) Ongoing operation and maintenance procedures in accordance with the general requirements of § 63.8(c)(1), (3), (4)(ii), (7), and (8), and this section;

(2) Before January 21, 2021, ongoing data quality assurance procedures in accordance with the general requirements of § 63.8(d). After January 20, 2021, ongoing data quality assurance procedures in accordance with the general requirements of § 63.8(d)(1) and (2).

(3) Before January 21, 2021, ongoing recordkeeping and reporting procedures in accordance with the general requirements of § 63.10(c), (e)(1), and (e)(2)(i). After January 20, 2021, the owner or operator shall keep these written procedures on record for the life of the affected source or until the affected source is no longer subject to the provisions of this part, to be made available for inspection, upon request, by the Administrator. If the performance evaluation plan is revised, the owner or operator shall keep previous (*i.e.,* superseded) versions of the performance evaluation plan on record to be made available for inspection, upon request, by the Administrator, for a period of 5 years after each revision to the plan. The program of corrective action should be included in the plan required under § 63.8(d)(2); and

(4) After January 20, 2021, ongoing recordkeeping and reporting procedures in accordance with the general requirements of § 63.10(c), (e)(1), and (e)(2)(i).

[67 FR 45598, July 9, 2002, as amended at 71 FR 20466, Apr. 20, 2006; 85 FR 44761, July 24, 2020]

General Testing and Initial Compliance Requirements

§ 63.5991 By what date must I conduct an initial compliance demonstration or performance test?

(a) If you have a new or reconstructed affected source, you must conduct each required initial compliance demonstration or performance test within 180 calendar days after the compliance date that is specified for your new or reconstructed affected source in § 63.5983(a). If you are required to conduct a performance test, you must do so according to the provisions of § 63.7(a)(2).

(b) If you have an existing affected source, you must conduct each required initial compliance demonstration or performance test no later than the compliance date that is specified for your existing affected source in § 63.5983(b). If you are required to conduct a performance test, you must do so according to the provisions of § 63.7(a)(2).

sfrattini on LAPJZKW1R2 with $$_JOB
VerDate Sep<11>2014 09:16 Apr 04, 2023 Jkt 256165 PO 00000 Frm 01284 Fmt 8010 Sfmt 8010 Q:\40\256165.XXX PC31

(c) If you commenced construction or reconstruction between October 18, 2000 and July 9, 2002, you must demonstrate initial compliance with either the proposed emission limitations or the promulgated emission limitations no later than January 6, 2003, or within 180 calendar days after startup of the source, whichever is later, according to § 63.7(a)(2)(ix).

(d) If you commenced construction or reconstruction between October 18, 2000 and July 9, 2002, and you chose to comply with the proposed emission limitation when demonstrating initial compliance, you must conduct a second compliance demonstration for the promulgated emission limitation no later than January 5, 2006, or after startup of the source, whichever is later, according to § 63.7(a)(2)(ix).

§ 63.5992 When must I conduct subsequent performance tests?

If you use a control system (add-on control device and capture system) to meet the emission limitations, you must also conduct a performance test at least once every 5 years following your initial compliance demonstration to verify control system performance and reestablish operating parameters or operating limits for control systems used to comply with the emissions limits.

§ 63.5993 What performance tests and other procedures must I use?

(a) If you use a control system to meet the emission limitations, you must conduct each performance test in Table 5 to this subpart that applies to you.

(b) Each performance test must be conducted according to the requirements in § 63.7(e)(1) and under the specific conditions specified in Table 5 to this subpart.

(c) Before January 21, 2021, you may not conduct performance tests during periods startup, shutdown, or malfunction, as specified in § 63.7(e)(1). After January 20, 2021, performance tests shall be conducted under such conditions as the Administrator specifies to the owner or operator based on representative performance of the affected source for the period being tested. Representative conditions exclude periods of startup and shutdown unless specified by the Administrator or an applicable subpart. The owner or operator may not conduct performance tests during periods of malfunction. The owner or operator must record the process information that is necessary to document operating conditions during the test and include in such record an explanation to support that such conditions represent normal operation. Upon request, the owner or operator shall make available to the Administrator such records as may be necessary to determine the conditions of performance tests.

(d) Before January 21, 2021, You must conduct three separate test runs for each performance test required in this section, as specified in § 63.7(e)(1) unless otherwise specified in the test method. Each test run must last at least 1 hour. After January 20, 2021, you must conduct three separate test runs for each performance test required in this section, as specified in § 63.5993(c) above, unless otherwise specified in the test method. Each test run must last at least 1 hour.

(e) If you are complying with the emission limitations using a control system, you must also conduct performance tests according to the requirements in paragraphs (e)(1) through (3) of this section as they apply to you.

(1) *Determining capture efficiency of permanent or temporary total enclosure.* Determine the capture efficiency of a capture system by using one of the procedures in Table 5 to this subpart.

(2) *Determining capture efficiency of an alternative method.* As an alternative to constructing a permanent or temporary total enclosure, you may determine the capture efficiency using any capture efficiency protocol and test methods if the data satisfy the criteria of either the Data Quality Objective or the Lower Confidence Limit approach in appendix A to subpart KK of this part.

(3) *Determining efficiency of an add-on control device.* Use Table 5 to this subpart to select the test methods for determining the efficiency of an add-on control device.

[67 FR 45598, July 9, 2002, as amended at 85 FR 44761, July 24, 2020]

sfrattini on LAPJZKW1R2 with $$_JOB
VerDate Sep<11>2014 09:16 Apr 04, 2023 Jkt 256165 PO 00000 Frm 01285 Fmt 8010 Sfmt 8010 Q:\40\256165.XXX PC31

TESTING AND INITIAL COMPLIANCE REQUIREMENTS FOR TIRE PRODUCTION AFFECTED SOURCES

§ 63.5994 How do I conduct tests and procedures for tire production affected sources?

(a) *Methods to determine the mass percent of HAP in cements and solvents.* To determine the HAP content in the cements and solvents used at your tire production affected source, use EPA Method 311 of appendix A of this part, an approved alternative method, or any other reasonable means for determining the HAP content of your cements and solvents. Other reasonable means include, but are not limited to: a material safety data sheet (MSDS), provided it contains appropriate information; a certified product data sheet (CPDS); or a manufacturer's hazardous air pollutant data sheet. You are not required to test the materials that you use, but the Administrator may require a test using EPA Method 311 (or an approved alternative method) to confirm the reported HAP content. If the results of an analysis by EPA Method 311 are different from the HAP content determined by another means, the EPA Method 311 results will govern compliance determinations.

(b) *Methods to demonstrate compliance with the HAP constituent emission limits in Table 1 to this subpart (option 1).* Use the method in paragraph (b)(1) of this section to demonstrate initial and continuous compliance with the applicable emission limits for tire production affected sources using the compliance alternative described in § 63.5985(a), purchase alternative. Use the equations in paragraphs (b)(2) and (3) of this section to demonstrate initial and continuous compliance with the emission limits for tire production affected sources using the monthly average compliance alternatives described in § 63.5985(b) and (c).

(1) Determine the mass percent of each HAP in each cement and solvent according to the procedures in paragraph (a) of this section.

(2) Use Equation 1 of this section to calculate the HAP emission rate for each monthly operating period when complying by using cements and solvents without using an add-on control device so that the monthly average HAP emissions do not exceed the HAP constituent emission limits in Table 1 to this subpart, option 1. Equation 1 follows:

$$E_{month} = \frac{\left(\sum_{i=1}^{n}(HAP_i)(TMASS_i)\right)(10^6)}{\sum_{i=1}^{n} TMASS_i} \qquad \text{(Eq. 1)}$$

Where:

E_{month} = mass of the specific HAP emitted per total mass cements and solvents from all cements and solvents used in tire production per month, grams per megagram.

HAP_i = mass percent, expressed as a decimal, of the specific HAP in cement and solvent i, as purchased, determined in accordance with paragraph (a) of this section.

$TMASS_i$ = total mass of cement and solvent i used in the month, grams.

n = number of cements and solvents used in the month.

(3) Use Equation 2 of this section to calculate the HAP emission rate for each monthly period when complying by using a control device to reduce HAP emissions so that the monthly average HAP emissions do not exceed the HAP constituent emission limits in Table 1 to this subpart (option 1). Equation 2 follows:

sfrattini on LAPJZKW1R2 with $$_JOB
VerDate Sep<11>2014 09:16 Apr 04, 2023 Jkt 256165 PO 00000 Frm 01286 Fmt 8010 Sfmt 8010 Q:\40\256165.XXX PC31
ER09JY02.000

$$E_{month} = \frac{\left\{\sum_{i=1}^{n}(HAP_i)(TMASS_i) + \sum_{j=1}^{m}(HAP_j)(TMASS_j)\left(1-\frac{EFF}{100}\right) + \sum_{k=1}^{p}(HAP_k)(TMASS_k)\right\}(10^6)}{\sum_{i=1}^{n}TMASS_i + \sum_{j=1}^{m}TMASS_j + \sum_{k=1}^{p}TMASS_k} \quad \text{(Eq. 2)}$$

Where:

E_{month} = mass of the specific HAP emitted per total mass cements and solvents from all cements and solvents used in tire production per month, grams per megagram.

HAP_i = mass percent, expressed as a decimal, of the specific HAP in cement and solvent i, as purchased, determined in accordance with paragraph (a) of this section for cements and solvents used in the month in processes that are not routed to a control device.

$TMASS_i$ = total mass of cement and solvent i used in the month in processes that are not routed to a control device, grams.

n = number of cements and solvents used in the month in processes that are not routed to a control device.

HAP_j = mass percent, expressed as a decimal, of the specific HAP in cement and solvent j, as purchased, determined in accordance with paragraph (a) of this section, for cements and solvents used in the month in processes that are routed to a control device during operating days, which are defined as days when the control system is operating within the operating range established during the performance test and when monitoring data are collected.

$TMASS_j$ = total mass of cement and solvent j used in the month in processes that are routed to a control device during all operating days, grams.

EFF = efficiency of the control system determined during the performance test (capture system efficiency multiplied by the control device efficiency), percent.

m = number of cements and solvents used in the month that are routed to a control device during all operating days.

HAP_k = mass percent, expressed as a decimal, of the specific HAP in cement and solvent k, as purchased, for cements and solvents used in the month in processes that are routed to a control device during non-control operating days, which are defined as days when either the control system is not operating within the operating range established during the performance test or when monitoring data are not collected.

$TMASS_k$ = total mass of cement and solvent k used in the month in processes that are routed to a control device during all non-control operating days, grams.

p = number of cements and solvents used in the month that are routed to a control device during all non-control operating days.

(4) Each monthly calculation is a compliance demonstration for the purpose of this subpart.

(c) *Methods to demonstrate compliance with the production-based emission limits in Table 1 to this subpart, option 2.* Use the methods and equations in paragraphs (c)(1) through (6) of this section to demonstrate initial and continuous compliance with the production-based emission limits for tire production affected sources using the compliance alternatives described in § 63.5985(b) and (c).

(1) *Methods to determine the mass percent of each HAP in cements and solvents.* Determine the mass percent of all HAP in cements and solvents using the applicable methods specified in paragraph (a) of this section.

(2) *Quantity of rubber used.* Determine your quantity of rubber used (megagrams) by accounting for the total mass of mixed rubber compound that is delivered to the tire production operation.

(3) *Compliance without use of an add-on control device.* If you do not use an add-on control device to meet the emission limits, use Equation 3 of this section to calculate the monthly HAP emission rate in grams of HAP emitted per megagram of rubber used, using the quantity of rubber used per month (megagrams), as determined in paragraph (c)(2) of this section so that the monthly average HAP emission does not exceed the HAP emission limit in Table 1 to this subpart, option 2. Equation 3 follows:

$$E_{month} = \frac{\sum_{i=1}^{n}(HAP_i)(TMASS_i)}{RMASS} \quad \text{(Eq. 3.)}$$

Where:

sfrattini on LAPJZKW1R2 with $$_JOB
VerDate Sep<11>2014 09:16 Apr 04, 2023 Jkt 256165 PO 00000 Frm 01287 Fmt 8010 Sfmt 8010 Q:\40\256165.XXX PC31
ER09JY02.001<MATH> ER09JY02.002<MATH>

E_{month} = mass of all HAP emitted per total mass of rubber used month, grams per megagram.

HAP_i = mass percent, expressed as a decimal, of all HAP in cement and solvent i, as purchased, determined in accordance with paragraph (a) of this section.

$TMASS_i$ = total mass of cement and solvent i used in the month, grams.

n = number of cements and solvents used in the month.

RMASS = total mass of rubber used per month, megagrams.

(4) *Compliance with use of an add-on control device.* If you use a control device to meet the emission limits, use Equation 4 of this section to calculate the monthly HAP emission rate in grams of HAP emitted per megagram of rubber used, using the quantity of rubber used per month (megagrams), as determined in paragraph (c)(2) of this section so that the monthly average HAP emission does not exceed the HAP emission limit in Table 1 of this subpart, option 2. Equation 4 follows:

$$E_{month} = \frac{\sum_{i=1}^{n}(HAP_i)(TMASS_i) + \sum_{j=1}^{m}(HAP_j)(TMASS_j)\left(1 - \frac{EFF}{100}\right) + \sum_{k=1}^{p}(HAP_k)(TMASS_k)}{RMASS} \quad \text{(Eq. 4)}$$

Where:

E_{month} = mass of all HAP emitted per total mass rubber used per month, grams per megagram.

HAP_i = mass percent, expressed as a decimal, of all HAP in cement and solvent i, as purchased, determined in accordance with paragraph (a) of this section for cements and solvents used in the month in processes that are not routed to a control device.

$TMASS_i$ = total mass of cement and solvent i used in the month in processes that are not routed to a control device, grams.

n = number of cements and solvents used in the month in processes that are not routed to a control device.

HAP_j = mass percent, expressed as a decimal, of all HAP in cement and solvent j, as purchased, determined in accordance with paragraph (a) of this section, for cements and solvents used in the month in processes that are routed to a control device during operating days, which are defined as days when the control system is operating within the operating range established during the performance test and when monitoring data are collected.

$TMASS_j$ = total mass of cement and solvent j used in the month in processes that are routed to a control device during all operating days.

EFF = efficiency of the control system determined during the performance test (capture system efficiency multiplied by the control device efficiency), percent.

m = number of cements and solvents used in the month that are routed to a control device during all operating days.

HAP_k = mass percent, expressed as a decimal, of all HAP in cement and solvent k, as purchased, for cements and solvents used in the month in processes that are routed to a control device during non-control operating days, which are defined as days when either the control system is not operating within the operating range established during the performance test or when monitoring data are not collected.

$TMASS_k$ = total mass of cement and solvent k used in the month in processes that are routed to a control device during all non-control operating days, grams.

p = number of cements and solvents used in the month that are routed to a control device during all non-control operating days.

RMASS = total mass of rubber used per month, megagrams.

(5) Each monthly calculation is a compliance demonstration for the purpose of this subpart.

(d) *Specific compliance demonstration requirements for tire production affected sources.* (1) Conduct any required compliance demonstration according to the requirements in § 63.5993.

(2) If you are demonstrating compliance with the HAP constituent option in Table 1 to this subpart, option 1, conduct the compliance demonstration using cements and solvents that are representative of cements and solvents typically used at your tire production affected source.

(3) Establish an operating range that corresponds to the control efficiency as described in Table 5 to this subpart.

(e) *How to take credit for HAP emissions reductions from add-on control devices.* If you want to take credit in

sfrattini on LAPJZKW1R2 with $$_JOB
VerDate Sep<11>2014 09:16 Apr 04, 2023 Jkt 256165 PO 00000 Frm 01288 Fmt 8010 Sfmt 8010 Q:\40\256165.XXX PC31
ER09JY02.003

Equations 2 and 4 of this section for HAP emissions reduced using a control system, you must meet the requirements in paragraphs (e)(1) and (2) of this section.

(1) Monitor the established operating parameters as appropriate.

(i) If you use a thermal oxidizer, monitor the firebox secondary chamber temperature.

(ii) If you use a carbon adsorber, monitor the total regeneration stream mass or volumetric flow for each regeneration cycle, and the carbon bed temperature after each regeneration, and within 15 minutes of completing any cooling cycle.

(iii) If you use a control device other than a thermal oxidizer or a regenerative carbon adsorber, install and operate a continuous parameter monitoring system according to your site-specific performance test plan submitted according to § 63.7(c)(2)(i).

(iv) If you use a permanent total enclosure, monitor the face velocity across the natural draft openings (NDO) in the enclosure. Also, if you use an enclosure, monitor to ensure that the sizes of the NDO have not changed, that there are no new NDO, and that a HAP emission source has not been moved closer to an NDO since the last compliance demonstration was conducted.

(v) If you use other capture systems, monitor the parameters identified in your monitoring plan.

(2) Maintain the operating parameters within the operating range established during the compliance demonstration.

(f) *How to take credit for HAP emissions reductions when streams are combined.* When performing material balances to demonstrate compliance, if the storage of materials, exhaust, or the wastewater from more than one affected source are combined at the point where control systems are applied, any credit for emissions reductions needs to be prorated among the affected sources based on the ratio of their contribution to the uncontrolled emissions.

[67 FR 45598, July 9, 2002, as amended at 68 FR 11747, Mar. 12, 2003]

§ 63.5995 What are my monitoring installation, operation, and maintenance requirements?

(a) For each operating parameter that you are required by § 63.5994(e)(1) to monitor, you must install, operate, and maintain a continuous parameter monitoring system (CPMS) according to the requirements in § 63.5990(e) and (f) and in paragraphs (a)(1) through (6) of this section.

(1) You must operate your CPMS at all times that the process is operating.

(2) You must collect data from at least four equally spaced periods each hour.

(3) For at least 75 percent of the hours in an operating day, you must have valid data (as defined in your site-specific monitoring plan) for at least four equally spaced periods each hour.

(4) For each hour that you have valid data from at least four equally spaced periods, you must calculate the hourly average value using all valid data.

(5) You must calculate the daily average using all of the hourly averages calculated according to paragraph (a)(3) of this section for the 24-hour period.

(6) You must record the results for each inspection, calibration, and validation check as specified in your site-specific monitoring plan.

(b) For each temperature monitoring device, you must meet the requirements in paragraphs (a) and (b)(1) through (8) of this section.

(1) Locate the temperature sensor in a position that provides a representative temperature.

(2) For a non-cryogenic temperature range, use a temperature sensor with a minimum measurement sensitivity of 2.2 degrees centigrade or 0.75 percent of the temperature value, whichever is larger.

(3) For a cryogenic temperature range, use a temperature sensor with a minimum measurement sensitivity of 2.2 degrees centigrade or 2 percent of the temperature value, whichever is larger.

(4) Shield the temperature sensor system from electromagnetic interference and chemical contaminants.

(5) If a chart recorder is used, it must have a sensitivity in the minor division of at least 20 degrees Fahrenheit.

sfrattini on LAPJZKW1R2 with $$_JOB
VerDate Sep<11>2014 09:16 Apr 04, 2023 Jkt 256165 PO 00000 Frm 01289 Fmt 8010 Sfmt 8010 Q:\40\256165.XXX PC31

(6) Perform an electronic calibration at least semiannually according to the procedures in the manufacturer's owners manual. Following the electronic calibration, you must conduct a temperature sensor validation check in which a second or redundant temperature sensor placed near the process temperature sensor must yield a reading within 16.7 degrees centigrade of the process temperature sensor's reading.

(7) Conduct calibration and validation checks any time the sensor exceeds the manufacturer's specified maximum operating temperature range or install a new temperature sensor.

(8) At least monthly, inspect all components for integrity and all electrical connections for continuity, oxidation, and galvanic corrosion.

(c) For each integrating regeneration stream flow monitoring device associated with a carbon adsorber, you must meet the requirements in paragraphs (a) and (c)(1) and (2) of this section.

(1) Use a device that has an accuracy of ±10 percent or better.

(2) Use a device that is capable of recording the total regeneration stream mass or volumetric flow for each regeneration cycle.

(d) For any other control device, or for other capture systems, ensure that the CPMS is operated according to a monitoring plan submitted to the Administrator with the Notification of Compliance Status report required by § 63.9(h). The monitoring plan must meet the requirements in paragraphs (a) and (d)(1) through (3) of this section. Conduct monitoring in accordance with the plan submitted to the Administrator unless comments received from the Administrator require an alternate monitoring scheme.

(e) For each pressure differential monitoring device, you must meet the requirements in paragraphs (a) and (e)(1) and (2) of this section.

(1) Conduct a quarterly EPA Method 2 procedure (found in 40 CFR part 60, appendix A) on the applicable NDOs and use the results to calibrate the pressure monitor if the difference in results are greater than 10 percent.

(2) Inspect the NDO monthly to ensure that their size has not changed, that there are no new NDO, and that no HAP sources have been moved closer to the NDO than when the last performance test was conducted.

[67 FR 45598, July 9, 2002, as amended at 85 FR 44762, July 24, 2020]

§ 63.5996 How do I demonstrate initial compliance with the emission limits for tire production affected sources?

(a) You must demonstrate initial compliance with each emission limit that applies to you according to Table 6 to this subpart.

(b) You must submit the Notification of Compliance Status containing the results of the initial compliance demonstration according to the requirements in § 63.6009(e).

TESTING AND INITIAL COMPLIANCE REQUIREMENTS FOR TIRE CORD PRODUCTION AFFECTED SOURCES

§ 63.5997 How do I conduct tests and procedures for tire cord production affected sources?

(a) *Methods to determine the mass percent of each HAP in coatings.* (1) To determine the HAP content in the coating used at your tire cord production affected source, use EPA Method 311 of appendix A of this part, an approved alternative method, or any other reasonable means for determining the HAP content of your coatings. Other reasonable means include, but are not limited to: an MSDS, provided it contains appropriate information; a CPDS; or a manufacturer's HAP data sheet. You are not required to test the materials that you use, but the Administrator may require a test using EPA Method 311 (or an approved alternative method) to confirm the reported HAP content. If the results of an analysis by EPA Method 311 are different from the HAP content determined by another means, the EPA Method 311 results will govern compliance determinations.

(2) Unless you demonstrate otherwise, the HAP content analysis must be based on coatings prior to any cross-linking reactions, *i.e.*, curing. However, you may account for differences in HAP emissions resulting from chemical reactions based on the conversion rates of the individual coating formulations, chemistry demonstrations, or

sfrattini on LAPJZKW1R2 with $$_JOB
VerDate Sep<11>2014 09:16 Apr 04, 2023 Jkt 256165 PO 00000 Frm 01290 Fmt 8010 Sfmt 8010 Q:\40\256165.XXX PC31

other demonstrations that are verifiable to the approving agency. Use the revised value in your compliance demonstration in the relevant equations in paragraph (b) of this section.

(b) *Methods to determine compliance with the emission limits in Table 2 to this subpart, option 1.* Use the equations in this paragraph (b) to demonstrate initial and continuous compliance with the emission limits for tire cord production sources using the compliance alternatives described in § 63.5987(a) and (b).

(1) *Determine mass percent of HAP.* Determine the mass percent of all HAP in each coating according to the procedures in paragraph (a) of this section.

(2) *Compliance without use of an add-on control device.* If you do not use an add-on control device to meet the emission limits, use Equation 1 of this section to calculate the monthly HAP emission rate in grams of HAP emitted per megagram of fabric processed at the tire cord production source to show that the monthly average HAP emissions do not exceed the emission limits in Table 2 to this subpart, option 1. Equation 1 follows:

$$E_{month} = \frac{\sum_{i=1}^{n}(HAP_i)(TCOAT_i)}{TFAB} \quad \text{(Eq. 1)}$$

Where:

E_{month} = mass of all HAP emitted per total mass of fabric processed in the month, grams per megagram.

HAP_i = mass percent, expressed as a decimal, of all HAP in the coating i, prior to curing and including any application station dilution, determined in accordance with paragraph (a) of this section.

$TCOAT_i$ = total mass of coating i made and used for application to fabric at the facility in the month, grams.

n = number of coatings used in the month.

TFAB = total mass of fabric processed in the month, megagrams.

(3) *Compliance with use of an add-on control device.* If you use a control device to meet the emission limits, use Equation 2 of this section to calculate the monthly HAP emission rate in grams of HAP emitted per megagram of fabric processed to show that the monthly average HAP emissions do not exceed the HAP emission limit in Table 2 of this subpart, option 1. Equation 2 follows:

$$E_{month} = \frac{\sum_{i=1}^{n}(HAP_i)(TCOAT_i) + \sum_{j=1}^{m}(HAP_j)(TCOAT_j)\left(1 - \frac{EFF}{100}\right) + \sum_{k=1}^{p}(HAP_k)(TCOAT_k)}{TFAB} \quad \text{(Eq. 2)}$$

Where:

E_{month} = mass of all HAP emitted per total mass of fabric processed in the month, grams per megagram.

HAP_i = mass percent, expressed as a decimal, of all HAP in coating i, prior to curing and including any application stations dilution, determined in accordance with paragraph (a) of this section, for coatings used in the month in processes that are not routed to a control device.

$TCOAT_i$ = total mass of coating i made and used for application to fabric at the facility in the month in processes that are not routed to a control device, grams.

n = number of coatings used in the month in processes that are not routed to a control device.

HAP_j = mass percent, expressed as a decimal, of all HAP in coating j, prior to curing and including any application station dilution, determined in accordance with paragraph (a) of this section, for coatings used in the month in processes that are routed to a control device during operating days, which are defined as days when the control system is operating within the operating range established during the performance test and when monitoring data are collected.

$TCOAT_j$ = total mass of coating j made and used for application to fabric at the facility in the month in processes that are routed to a control device during all operating days, grams.

EFF = efficiency of the control system determined during the performance test (capture system efficiency multiplied by the control device efficiency), percent.

m = number of coatings used in the month that are routed to a control device during all operating days.

HAP_k = mass percent, expressed as a decimal, of all HAP in coating k, prior to curing

sfrattini on LAPJZKW1R2 with $$_JOB
VerDate Sep<11>2014 09:16 Apr 04, 2023 Jkt 256165 PO 00000 Frm 01291 Fmt 8010 Sfmt 8010 Q:\40\256165.XXX PC31
ER09JY02.004</MATH> ER09JY02.005</MATH>

and including any application station dilution, for coatings used in the month in processes that are routed to a control device during non-control operating days, which are defined as days when either the control system is not operating within the operating range established during the performance test or when monitoring data are not collected.

$TCOAT_k$ = total mass of coating k made and used for application to fabric at the facility in the month in processes that are routed to a control device during all non-control operating days, grams.

p = number of coatings used in the month that are routed to a control device during all non-control operating days.

TFAB = total mass of fabric processed in the month, megagrams.

(4) Each monthly calculation is a compliance demonstration for the purpose of this subpart.

(c) *Methods to determine compliance with the emission limits in table 2 of this subpart, option 2.* Use the equations in this paragraph (c) to demonstrate initial and continuous compliance with the emission limits for tire cord production sources using the compliance alternatives described in § 63.5987(a) and (b).

(1) Determine the mass percent of each HAP in each coating according to the procedures in paragraph (a) of this section.

(2) Use Equation 3 of this section to calculate the monthly average HAP emission rate when complying by using coatings without using an add-on control device to show that the monthly average HAP emissions do not exceed the emission limits in Table 2 to this subpart, option 2. Equation 3 follows:

$$E_{month} = \frac{\left(\sum_{i=1}^{n}(HAP_i)(TCOAT_i)\right)(10^6)}{\sum_{i=1}^{n} TCOAT_i} \qquad \text{(Eq. 3)}$$

Where:

E_{month} = mass of the specific HAP emitted per total mass of coatings from all coatings made and used in tire cord fabric production per month, grams per megagram.

HAP_i = mass percent, expressed as a decimal, of the specific HAP in the coating i, prior to curing and including any application station dilution, determined in accordance with paragraph (a) of this section.

$TCOAT_i$ = total mass of coating i made and used for application to fabric at the facility in the month, grams.

n = number of coatings used in the month.

(3) Use Equation 4 of this section to calculate the monthly average HAP emission rate when complying by using an add-on control device to show that the monthly average HAP emissions do not exceed the emission limits in table 2 to this subpart, option 2. Equation 4 follows:

$$E_{month} = \frac{\left\{\sum_{i=1}^{n}(HAP_i)(TCOAT_i) + \sum_{j=1}^{m}(HAP_j)(TCOAT_j)\left(1-\frac{EFF}{100}\right) + \sum_{k=1}^{p}(HAP_k)(TMASS_k)\right\}(10^6)}{\sum_{i=1}^{n} TCOAT_i + \sum_{j=1}^{m} TCOAT_j + \sum_{k=1}^{p} TCOAT_k} \qquad \text{(Eq. 4)}$$

Where:

E_{month} = mass of the specific HAP emitted per total mass of coatings from all coatings made and used in tire cord fabric production per month, grams per megagram.

HAP_i = mass percent, expressed as a decimal, of the specific HAP in coating i, prior to curing and including any application station dilution, determined in accordance with paragraph (a) of this section, for

sfrattini on LAPJZKW1R2 with $$_JOB
VerDate Sep<11>2014 09:16 Apr 04, 2023 Jkt 256165 PO 00000 Frm 01292 Fmt 8010 Sfmt 8010 Q:\40\256165.XXX PC31
ER09JY02.006</MATH> ER09JY02.007</MATH>

coatings used in the month in processes that are not routed to a control device.

$TCOAT_i$ = total mass of coating i made and used for application to fabric at the facility in the month in processes that are not routed to a control device, grams.

n = number of coatings used in the month in processes that are not routed to a control device.

HAP_j = mass percent, expressed as a decimal, of the specific HAP in coating j, prior to curing and including any application station dilution, determined in accordance with paragraph (a) of this section, for coatings used in the month in processes that are routed to a control device during operating days, which are defined as days when the control system is operating within the operating range established during the performance test and when monitoring data are collected.

$TCOAT_j$ = total mass of coating i made and used for application to fabric at the facility in the month in processes that are routed to a control device during all operating days, grams.

EFF = efficiency of the control system determined during the performance test (capture system efficiency multiplied by the control device efficiency), percent.

m = number of coatings used in the month that are routed to a control device during all operating days.

HAP_k = mass percent, expressed as a decimal, of the specific HAP in coating k, prior to curing and including any application station dilution, for coatings used in the month in processes that are routed to a control device during non-control operating days, which are defined as days when either the control system is not operating within the operating range established during the performance test or when monitoring data are not collected.

$TCOAT_k$ = total mass of coating i made and used for application to fabric at the facility in the month in processes that are routed to a control device during all non-control operating days, grams.

p = number of coatings used in the month that are routed to a control device during all non-control operating days.

(4) Each monthly calculation is a compliance demonstration for the purpose of this subpart.

(d) *Specific compliance demonstration requirements for tire cord production affected sources.* (1) Conduct any required compliance demonstrations according to the requirements in §63.5993.

(2) Conduct the compliance demonstration using coatings with average mass percent HAP content that are representative of the coatings typically used at your tire cord production affected source.

(3) Establish an operating range that corresponds to the control efficiency as described in Table 5 to this subpart.

(e) *How to take credit for HAP emissions reductions from add-on control devices.* If you want to take credit in Equations 2 and 4 of this section for HAP emissions reduced using a control system, you must meet the requirements in paragraphs (e)(1) and (2) of this section.

(1) Monitor the established operating parameters as appropriate.

(i) If you use a thermal oxidizer, continuously monitor the firebox secondary chamber temperature.

(ii) If you use a carbon adsorber, monitor the total regeneration stream mass or volumetric flow for each regeneration cycle and the carbon bed temperature after each regeneration and within 15 minutes of completing any cooling cycle.

(iii) If you use a control device other than a thermal oxidizer or a regenerative carbon adsorber, install and operate a continuous parameter monitoring system according to your site-specific performance test plan submitted according to §63.7(c)(2)(i).

(iv) If you use a permanent total enclosure, monitor the face velocity across the NDO in the enclosure. Also, if you use an enclosure, monitor to ensure that the sizes of the NDO have not changed, that there are no new NDO, and that a HAP emission source has not been moved closer to an NDO since the last performance test was conducted.

(v) If you use other capture systems, monitor the parameters identified in your monitoring plan.

(2) Maintain the operating parameter within the operating range established during the compliance demonstration.

(f) *How to take credit for HAP emissions reductions when streams are combined.* When performing material balances to demonstrate compliance, if the storage of materials, exhaust, or the wastewater from more than one affected source are combined at the point where control systems are applied, any credit for emissions reductions needs to be prorated among the affected sources

sfrattini on LAPJZKW1R2 with $$_JOB
VerDate Sep<11>2014 09:16 Apr 04, 2023 Jkt 256165 PO 00000 Frm 01293 Fmt 8010 Sfmt 8010 Q:\40\256165.XXX PC31

based on the ratio of their contribution to the uncontrolled emissions.

§ 63.5998 What are my monitoring installation, operation, and maintenance requirements?

For each operating parameter that you are required by § 63.5997(e)(1) to monitor, you must install, operate, and maintain a continuous parameter monitoring system according to the provisions in § 63.5995(a) through (e).

§ 63.5999 How do I demonstrate initial compliance with the emission limits for tire cord production affected sources?

(a) You must demonstrate initial compliance with each emission limit that applies to you according to Table 7 to this subpart.

(b) You must submit the Notification of Compliance Status containing the results of the initial compliance demonstration according to the requirements in § 63.6009(e).

TESTING AND INITIAL COMPLIANCE REQUIREMENTS FOR PUNCTURE SEALANT APPLICATION AFFECTED SOURCES

§ 63.6000 How do I conduct tests and procedures for puncture sealant application affected sources?

(a) *Methods to determine compliance with the puncture sealant application emission limitations in Table 3 to this subpart.* Use the methods and equations in paragraph (b) of this section to demonstrate initial and continuous compliance with the overall control efficiency compliance alternatives described in § 63.5989(a) and (b). Use the methods and equations in paragraphs (c) through (g) of this section to demonstrate initial and continuous compliance with the HAP constituent compliance alternative described in § 63.5989(c) and (d).

(b) *Methods to determine compliance with the emission limits in Table 3 to this subpart, option 1.* Follow the test procedures described in § 63.5993 to determine the overall control efficiency of your system.

(1) You must also meet the requirements in paragraphs (b)(1)(i) and (ii) of this section.

(i) Conduct the performance test using a puncture sealant with an average mass percent HAP content that is representative of the puncture sealants typically used at your puncture sealant application affected source.

(ii) Establish all applicable operating limit ranges that correspond to the control system efficiency as described in Table 5 to this subpart.

(2) Use Equation 1 of this section to calculate the overall efficiency of the control system. If you have a permanent total enclosure that satisfies EPA Method 204 (found in 40 CFR part 51, appendix M) criteria, assume 100 percent capture efficiency for variable F. Equation 1 follows:

$$R = \frac{(F)(E)}{100} \qquad \text{(Eq. 1)}$$

Where:

R = overall control system efficiency, percent.

F = capture efficiency of the capture system on add-on control device, percent, determined during the performance test.

E = control efficiency of add-on control device k, percent, determined during the performance test.

(3) Monitor the established operating limits as appropriate.

(i) If you use a thermal oxidizer, monitor the firebox secondary chamber temperature.

(ii) If you use a carbon adsorber, monitor the total regeneration stream mass or volumetric flow for each regeneration cycle, and the carbon bed temperature after each regeneration, and within 15 minutes of completing any cooling cycle.

(iii) For each control device used other than a thermal oxidizer or a regenerative carbon adsorber, install and operate a continuous parameter monitoring system according to your site-specific performance test plan submitted according to § 63.7(c)(2)(i).

sfrattini on LAPJZKW1R2 with $$_JOB
VerDate Sep<11>2014 09:16 Apr 04, 2023 Jkt 256165 PO 00000 Frm 01294 Fmt 8010 Sfmt 8010 Q:\40\256165.XXX PC31
ER09JY02.008</MATH>

(iv) If you use a permanent total enclosure, monitor the face velocity across the NDO in the enclosure. Also, if you use an enclosure, monitor to ensure that the sizes of the NDO have not changed, that there are no new NDO, and that a HAP emission source has not been moved closer to an NDO since the last performance test was conducted.

(v) If you use other capture systems, monitor the parameters identified in your monitoring plan.

(vi) Maintain the operating parameter within the operating range established during the performance test.

(c) *Methods to determine the mass percent of each HAP in puncture sealants.* To determine the HAP content in the puncture sealant used at your puncture sealant application affected source, use EPA Method 311 of appendix A of 40 CFR part 63, an approved alternative method, or any other reasonable means for determining the HAP content of your puncture sealants. Other reasonable means include, but are not limited to: an MSDS, provided it contains appropriate information; a CPDS; or a manufacturer's hazardous air pollutant data sheet. You are not required to test the materials that you use, but the Administrator may require a test using EPA Method 311 (or an approved alternative method) to confirm the reported HAP content. If the results of an analysis by EPA Method 311 are different from the HAP content determined by another means, the EPA Method 311 results will govern compliance determinations.

(d) *Methods to determine compliance with the emission limits in Table 3 to this subpart, option 2.* Use the equations in this paragraph (d) to demonstrate initial and continuous compliance with the HAP constituent emission limits for puncture sealant application affected sources using the compliance alternatives described in § 63.5989(c) and (d).

(1) Use Equation 2 of this section to calculate the monthly average HAP emission rate when complying by using puncture sealants without using an add-on control device to show that the monthly average HAP emissions do not exceed the emission limits in Table 3 to this subpart, option 2. Equation 2 follows:

$$E_{month} = \frac{\left(\sum_{i=1}^{n}(HAP_i)(TPSEAL_i)\right)(10^6)}{\sum_{i=1}^{n} TPSEAL_i} \qquad \text{(Eq. 2)}$$

Where:

E_{month} = mass of the specific HAP emitted per total mass of puncture sealants from all puncture sealants used at the puncture sealant affected source per month, grams per megagram.

HAP_i = mass percent, expressed as a decimal, of the specific HAP in puncture sealant i, including any application booth dilution, determined in accordance with paragraph (c) of this section.

$TPSEAL_i$ = total mass of puncture sealant i used in the month, grams.

n = number of puncture sealants used in the month.

(2) Use Equation 3 of this section to calculate the monthly average HAP emission rate when complying by using puncture sealants by using an add-on control device to show that the monthly average HAP emissions do not exceed the emission limits in Table 3 to this subpart, option 2. Equation 3 follows:

sfrattini on LAPJZKW1R2 with $$_JOB
VerDate Sep<11>2014 09:16 Apr 04, 2023 Jkt 256165 PO 00000 Frm 01295 Fmt 8010 Sfmt 8010 Q:\40\256165.XXX PC31
ER09JY02.009</MATH>

$$E_{month} = \frac{\left\{\sum_{i=1}^{n}(HAP_i)(TPSEAL_i) + \sum_{j=1}^{m}(HAP_j)(TPSEAL_j)\left(1 - \frac{EFF}{100}\right) + \sum_{k=1}^{p}(HAP_k)(TPSEAL_k)\right\}(10^6)}{\sum_{i=1}^{n}TPSEAL_i + \sum_{j=1}^{m}TPSEAL_j + \sum_{k=1}^{p}TPSEAL_k} \quad \text{(Eq. 3)}$$

Where:

E_{month} = mass of the specific HAP emitted per total mass of puncture sealants used at the puncture sealant affected source per month, grams per megagram.

HAP_i = mass percent, expressed as a decimal, of the specific HAP in puncture sealant i, including any application booth dilution, determined in accordance with paragraph (c) of this section for puncture sealants used in the month in processes that are not routed to a control device.

$TPSEAL_i$ = total mass of puncture sealant i used in the month in processes that are not routed to a control device, gram.

n = number of puncture sealants used in the month in processes that are not routed to a control device.

HAP_j = mass percent, expressed as a decimal, of the specific HAP, in puncture sealant j, including any application booth dilution, determined in accordance with paragraph (c) of this section, for puncture sealants used in the month in processes that are routed to a control device during operating days, which are defined as days when the control system is operating within the operating range established during the performance test and when monitoring data are collected.

$TPSEAL_j$ = total mass of puncture sealant j used in the month in processes that are routed to a control device during all operating days, grams.

EFF = efficiency of the control system determined during the performance test (capture system efficiency multiplied by the control device efficiency), percent.

m = number of puncture sealants used in the month that are routed to a control device during all operating days.

HAP_k = mass percent, expressed as a decimal, of the specific HAP, in puncture sealant k, including any application booth dilution, for puncture sealants used in the month in processes that are routed to a control device during non-control operating days, which are defined as days when either the control system is not operating within the operating range established during the performance test or when monitoring data are not collected.

$TPSEAL_k$ = total mass of total mass of puncture sealant k used in the month in processes that are routed to a control device during all non-control operating days, grams.

p = number of puncture sealants used in the month that are routed to a control device during all non-control operating days.

(3) Each monthly calculation is a compliance demonstration for the purpose of this subpart.

(e) *Specific compliance demonstration requirements for puncture sealant application affected sources.* (1) Conduct any required compliance demonstrations according to the requirements in § 63.5993.

(2) Conduct the compliance demonstration using a puncture sealant with average mass percent HAP content that is representative of the puncture sealants typically used at your puncture sealant application affected source.

(3) Establish an operating range that corresponds to the appropriate control efficiency described in Table 5 to this subpart.

(f) *How to take credit for HAP emissions reductions from add-on control devices.* If you want to take credit in Equation 3 of this section for HAP emissions reduced using a control system, you must monitor the established operating parameters as appropriate and meet the requirements in paragraph (b)(3) of this section.

(g) *How to take credit for HAP emissions reductions when streams are combined.* When performing material balances to demonstrate compliance, if the storage of materials, exhaust, or the wastewater from more than one affected source are combined at the point where control systems are applied, any credit for emissions reductions needs to be prorated among the affected sources based on the ratio of their contribution to the uncontrolled emissions.

sfrattini on LAPJZKW1R2 with $$_JOB
VerDate Sep<11>2014 09:16 Apr 04, 2023 Jkt 256165 PO 00000 Frm 01296 Fmt 8010 Sfmt 8010 Q:\40\256165.XXX PC31
ER09JY02.010

§ 63.6001 What are my monitoring installation, operation, and maintenance requirements?

For each operating limit that you are required by § 63.6000(b)(3) to monitor or each operating parameter that you are required by § 63.6000(f) to monitor, you must install, operate, and maintain a continuous parameter monitoring system according to the provisions in § 63.5995(a) through (e).

§ 63.6002 How do I demonstrate initial compliance with the emission limits for puncture sealant application affected sources?

(a) You must demonstrate initial compliance with each emission limit that applies to you according to Table 8 to this subpart.

(b) You must submit the Notification of Compliance Status containing the results of the initial compliance demonstration according to the requirements in § 63.6009(e).

CONTINUOUS COMPLIANCE REQUIREMENTS FOR TIRE PRODUCTION AFFECTED SOURCES

§ 63.6003 How do I monitor and collect data to demonstrate continuous compliance with the emission limits for tire production affected sources?

(a) You must monitor and collect data as specified in Table 9 to this subpart.

(b) Except for periods of monitoring malfunctions, associated repairs, and required quality assurance or control activities (including, as applicable, calibration checks and required zero and span adjustments), you must monitor continuously (or collect data at all required intervals) while the affected source is operating. This includes periods of startup, shutdown, and malfunction when the affected source is operating.

(c) In data average calculations and calculations used to report emission or operating levels, you may not use data recorded during periods of monitoring malfunctions or associated repairs, or recorded during required quality assurance or control activities. Such data may not be used in fulfilling any applicable minimum data availability requirement. You must use all the data collected during all other periods in assessing the operation of the control device and associated control system.

§ 63.6004 How do I demonstrate continuous compliance with the emission limits for tire production affected sources?

(a) You must demonstrate continuous compliance with each applicable limit in Table 1 to this subpart using the methods specified in Table 10 to this subpart.

(b) You must report each instance in which you did not meet an emission limit in Table 1 to this subpart. You must also report each instance in which you did not meet the applicable requirements in Table 10 to this subpart. These instances are deviations from the emission limits in this subpart. The deviations must be reported in accordance with the requirements in § 63.6010(e).

(c) You also must meet the following requirements if you are complying with the purchase alternative for tire production sources described in § 63.5985(a):

(1) If, after you submit the Notification of Compliance Status, you use a cement or solvent for which you have not previously verified percent HAP mass using the methods in § 63.5994(a), you must verify that each cement and solvent used in the affected source meets the emission limit, using any of the methods in § 63.5994(a).

(2) You must update the list of all the cements and solvents used at the affected source.

(3) With the compliance report for the reporting period during which you used the new cement or solvent, you must submit the updated list of all cements and solvents and a statement certifying that, as purchased, each cement and solvent used at the affected source during the reporting period met the emission limits in table 1 to this subpart.

sfrattini on LAPJZKW1R2 with $$_JOB
VerDate Sep<11>2014 09:16 Apr 04, 2023 Jkt 256165 PO 00000 Frm 01297 Fmt 8010 Sfmt 8010 Q:\40\256165.XXX PC31

CONTINUOUS COMPLIANCE REQUIREMENTS FOR TIRE CORD PRODUCTION AFFECTED SOURCES

§ 63.6005 How do I monitor and collect data to demonstrate continuous compliance with the emission limits for tire cord production affected sources?

(a) You must monitor and collect data to demonstrate continuous compliance with the emission limits for tire cord production affected sources as specified in table 11 to this subpart.

(b) You must monitor and collect data according to the requirements in § 63.6003(b) and (c).

§ 63.6006 How do I demonstrate continuous compliance with the emission limits for tire cord production affected sources?

(a) You must demonstrate continuous compliance with each applicable emission limit in table 2 to this subpart using the methods specified in table 12 to this subpart.

(b) You must report each instance in which you did not meet an applicable emission limit in table 2 to this subpart. You must also report each instance in which you did not meet the applicable requirements in table 12 to this subpart. These instances are deviations from the emission limits in this subpart. The deviations must be reported in accordance with the requirements in § 63.6010(e).

CONTINUOUS COMPLIANCE REQUIREMENTS FOR PUNCTURE SEALANT APPLICATION AFFECTED SOURCES

§ 63.6007 How do I monitor and collect data to demonstrate continuous compliance with the emission limitations for puncture sealant application affected sources?

(a) You must monitor and collect data to demonstrate continuous compliance with the emission limitations for puncture sealant application affected sources as specified in table 13 to this subpart.

(b) You must monitor and collect data according to the requirements in § 63.6003(b) and (c).

§ 63.6008 How do I demonstrate continuous compliance with the emission limitations for puncture sealant application affected sources?

(a) You must demonstrate continuous compliance with each applicable emission limitation in tables 3 and 4 to this subpart using the methods specified in Table 14 to this subpart.

(b) You must report each instance in which you did not meet an applicable emission limit in table 3 to this subpart. You must also report each instance in which you did not meet the applicable requirements in table 14 to this subpart. These instances are deviations from the emission limits in this subpart. The deviations must be reported in accordance with the requirements in § 63.6010(e).

NOTIFICATIONS, REPORTS, AND RECORDS

§ 63.6009 What notifications must I submit and when?

(a) You must submit all of the notifications in §§ 63.7 (b) and (c), 63.8(f) (4) and (6), and 63.9 (b) through (e) and (h) that apply to you by the dates specified.

(b) As specified in § 63.9(b)(2), if you startup your affected source before July 9, 2002, you must submit an Initial Notification not later than November 6, 2002, or no later than 120 days after the source becomes subject to this subpart, whichever is later.

(c) As specified in § 63.9(b)(3), if you startup your new or reconstructed affected source on or after July 9, 2002, you must submit an Initial Notification not later than 120 calendar days after you become subject to this subpart.

(d) If you are required to conduct a performance test, you must submit a notification of intent to conduct a performance test at least 60 calendar days before the performance test is scheduled to begin as required in § 63.7(b)(1).

(e) If you are required to conduct a performance test, design evaluation, or other initial compliance demonstration as specified in tables 5 through 8 to this subpart, you must submit a Notification of Compliance Status according to § 63.9(h)(2)(ii). The Notification must contain the information listed in table

sfrattini on LAPJZKW1R2 with $$_JOB
VerDate Sep<11>2014 09:16 Apr 04, 2023 Jkt 256165 PO 00000 Frm 01298 Fmt 8010 Sfmt 8010 Q:\40\256165.XXX PC31

15 to this subpart for compliance reports. The Notification of Compliance Status must be submitted according to the following schedules, as appropriate:

(1) For each initial compliance demonstration required in tables 6 through 8 to this subpart that does not include a performance test, you must submit the Notification of Compliance Status before the close of business on the 30th calendar day following the completion of the initial compliance demonstration.

(2) Before January 21, 2021, for each initial compliance demonstration required in tables 6 through 8 to this subpart that includes a performance test conducted according to the requirements in table 5 to this subpart, you must submit the Notification of Compliance Status, including the performance test results, before the close of business on the 60th calendar day following the completion of the performance test according to §63.10(d)(2). After January 20, 2021, for each initial compliance demonstration required in tables 6 through 8 to this subpart that includes a performance test conducted according to the requirements in table 5 to this subpart, you must submit the Notification of Compliance Status, including the performance test results, before the close of business on the 60th calendar day following the completion of the performance test according to §§63.10(d)(2) and 63.6010(h)(1) through (3).

(f) For each tire production affected source, the Notification of Compliance Status must also identify the emission limit option in §63.5984 and the compliance alternative in §63.5985 that you have chosen to meet.

(g) For each tire production affected source complying with the purchase compliance alternative in §63.5985(a), the Notification of Compliance Status must also include the information listed in paragraphs (g)(1) and (2) of this section.

(1) A list of each cement and solvent, as purchased, that is used at the affected source and the manufacturer or supplier of each.

(2) The individual HAP content (percent by mass) of each cement and solvent that is used.

(h) For each tire production or tire cord production affected source using a control device, the Notification of Compliance Status must also include the information in paragraphs (h) (1) and (2) of this section for each operating parameter in §§63.5994(e)(1) and 63.5997(e)(1) that applies to you.

(1) The operating parameter value averaged over the full period of the performance test (e.g., average secondary chamber firebox temperature over the period of the performance test was 1,500 degrees Fahrenheit).

(2) The operating parameter range within which HAP emissions are reduced to the level corresponding to meeting the applicable emission limits in tables 1 and 2 to this subpart.

(i) For each puncture sealant application affected source using a control device, the Notification of Compliance Status must include the information in paragraphs (i)(1) and (2) of this section for each operating limit in §63.6000(b)(3) and each operating parameter in §63.6000(f).

(1) The operating limit or operating parameter value averaged over the full period of the performance test.

(2) The operating limit or operating parameter range within which HAP emissions are reduced to the levels corresponding to meeting the applicable emission limitations in table 3 to this subpart.

(j) For each tire cord production affected source required to assess the predominant use for coating web substrates as required by §63.5981(b), you must submit a notice of the results of the reassessment within 30 days of completing the reassessment. The notice shall specify whether this subpart XXXX is still the applicable subpart and, if it is not, which part 63 subpart is applicable.

(k) You must submit to the Administrator notification reports of the following recorded information. Beginning on January 21, 2021 or once the reporting form has been available on the Compliance and Emissions Data Reporting Interface (CEDRI) website for 1-year, whichever date is later, you must submit all subsequent notification of compliance status reports required in §§63.9(h) and 63.6009(d) through (i) to the EPA via the CEDRI.

sfrattini on LAPJZKW1R2 with $$_JOB
VerDate Sep<11>2014 09:16 Apr 04, 2023 Jkt 256165 PO 00000 Frm 01299 Fmt 8010 Sfmt 8010 Q:\40\256165.XXX PC31

The CEDRI interface can be accessed through the EPA's Central Data Exchange (CDX) (*https://cdx.epa.gov*). You must use the appropriate electronic report form (*i.e.*, template) on the CEDRI website (*https://www.epa.gov/electronic-reporting-air-emissions/cedri*) for this subpart. The date on which the report form becomes available will be listed on the CEDRI website. If the reporting form for the notification of compliance status report specific to this subpart is not available in CEDRI at the time that the report is due, you must submit the report to the Administrator at the appropriate addresses listed in § 63.13. Once the form has been available in CEDRI for 1 year, you must begin submitting all subsequent notification of compliance status reports via CEDRI. The applicable notification must be submitted by the deadline specified in this subpart, regardless of the method in which the report is submitted. The EPA will make all the information submitted through CEDRI available to the public without further notice to you. Do not use CEDRI to submit information you claim as confidential business information (CBI). Anything submitted using CEDRI cannot later be claimed to be CBI. Although we do not expect persons to assert a claim of CBI, if persons wish to assert a CBI, if you claim that some of the information required to be submitted via CEDRI is CBI, submit a complete report, including information claimed to be CBI, to the EPA. The report must be generated using the appropriate electronic reporting form found on the CEDRI website. Submit the file on a compact disc, flash drive, or other commonly used electronic storage medium and clearly mark the medium as CBI. Mail the electronic medium to U.S. EPA/OAQPS/CORE CBI Office, Attention: Group Leader, Measurement Policy Group, MD C404–02, 4930 Old Page Rd., Durham, NC 27703. The same file with the CBI omitted shall be submitted to the EPA via the EPA's CDX CEDRI as described earlier in this paragraph. All CBI claims must be asserted at the time of submission. Furthermore, under CAA section 114(c) emissions data is not entitled to confidential treatment and requires EPA to make emissions data available to the public. Thus, emissions data will not be protected as CBI and will be made publicly available. Where applicable, you may assert a claim of the EPA system outage, in accordance with § 63.6010(i), or force majeure, in accordance with § 63.6010(j), for failure to timely comply with this requirement.

[67 FR 45598, July 9, 2002, as amended at 85 FR 44762, July 24, 2020; 85 FR 73911, Nov. 19, 2020]

§ 63.6010 What reports must I submit and when?

(a) You must submit each applicable report in table 15 to this subpart.

(b) Unless the Administrator has approved a different schedule for submission of reports under § 63.10(a), you must submit each report by the date in table 15 to this subpart and according to the requirements in paragraphs (b)(1) through (5) of this section.

(1) The first compliance report must cover the period beginning on the compliance date that is specified for your affected source in § 63.5983 and ending on June 30 or December 31, whichever date is the first date following the end of the first calendar half after the compliance date that is specified for your source in § 63.5983.

(2) Before January 21, 2021, the first semiannual compliance report must be postmarked or delivered no later than July 31 or January 31, whichever date follows the end of the first calendar half after the compliance date that is specified for your affected source in § 63.5983. After January 20, 2021, the first semiannual compliance report must be submitted electronically via CEDRI no later than July 31 or January 31, whichever date follows the end of the first calendar half after the compliance date that is specified for your affected source in § 63.5983.

(3) Each subsequent compliance report must cover the semiannual reporting period from January 1 through June 30 or the semiannual reporting period from July 1 through December 31.

(4) Before January 21, 2021, each subsequent semiannual compliance report must be postmarked or delivered no later than July 31 or January 31, whichever date is the first date following the end of the semiannual reporting period. After January 20, 2021,

sfrattini on LAPJZKW1R2 with $$_JOB
VerDate Sep<11>2014 09:16 Apr 04, 2023 Jkt 256165 PO 00000 Frm 01300 Fmt 8010 Sfmt 8010 Q:\40\256165.XXX PC31

each subsequent semiannual compliance report must be submitted electronically via CEDRI no later than July 31 or January 31, whichever date is the first date following the end of the semiannual reporting period.

(5) For each affected source that is subject to permitting subparts pursuant to 40 CFR part 70 or 40 CFR part 71, and if the permitting authority has established dates for submitting semiannual reports pursuant to 40 CFR 70.6(a)(3)(iii)(A) or 40 CFR 71.6(a)(3)(iii)(A), you may submit the first and subsequent compliance reports according to the dates the permitting authority has established instead of according to the dates in paragraphs (b)(1) through (4) of this section.

(c) The compliance report must contain information specified in paragraphs (c)(1) through (10) of this section.

(1) Company name and address.

(2) Statement by a responsible official, with that official's name, title, and signature, certifying the accuracy of the content of the report.

(3) Date of report and beginning and ending dates of the reporting period.

(4) Before January 21, 2021, if you had a startup, shutdown and malfunction during the reporting period and you took actions consistent with your startup, shutdown, and malfunction plan, the compliance report must include the information in §63.10(d)(5)(i). After January 20, 2021, a startup, shutdown, and malfunction plan is not required.

(5) If there are no deviations from any emission limitations (emission limit or operating limit) that applies to you, a statement that there were no deviations from the emission limitations during the reporting period.

(6) If there were no periods during which the operating parameter monitoring systems were out-of-control as specified in §63.8(c)(7), a statement that there were no periods during which the operating parameter monitoring systems or CPMS were out-of-control during the reporting period.

(7) Before January 21, 2021, for each tire production affected source, the emission limit option in §63.5984 and the compliance alternative in §63.5985 that you have chosen to meet. After January 20, 2021, for each tire production affected source, the emission limit option in §63.5984 and the compliance alternative in §63.5985 that you have chosen to meet. If you have chosen the same emission limit option and compliance alternative for every tire production affected source at your facility, then you may report the emission limit option and compliance alternative for the facility rather than for each tire production affected source.

(8) For each tire production affected source complying with the purchase compliance alternative in §63.5985(a), and for each annual reporting period during which you use a cement and solvent that, as purchased, was not included in the list submitted with the Notification of Compliance Status in §63.6009(g), an updated list of all cements and solvents used, as purchased, at the affected source. You must also include a statement certifying that each cement and solvent, as purchased, that was used at the affected source during the reporting period met the HAP constituent limits (option 1) in table 1 to this subpart.

(9) For each tire cord production affected source, the emission limit option in §63.5986 and the compliance alternative in §63.5987 that you have chosen to meet.

(10) For each puncture sealant application affected source, the emission limit option in §63.5988 and the compliance alternative in §63.5989 that you have chosen to meet.

(d) Before January 21, 2021, for each deviation from an emission limitation (emission limit or operating limit) that occurs at an affected source where you are not using a CPMS to comply with the emission limitations in this subpart, the compliance report must contain the information in paragraphs (c)(1) through (4) and paragraphs (d)(1) and (2) of this section. This includes periods of startup, shutdown, and malfunction when the affected source is operating. After January 20, 2021, for each deviation from an emission limitation (emission limit or operating limit) that occurs at an affected source where you are not using a CPMS to comply with the emission limitations in this subpart, the compliance report

sfrattini on LAPJZKW1R2 with $$_JOB
VerDate Sep<11>2014 09:16 Apr 04, 2023 Jkt 256165 PO 00000 Frm 01301 Fmt 8010 Sfmt 8010 Q:\40\256165.XXX PC31

must contain the information in paragraphs (c)(1) through (3) and (d)(1) through (3) of this section. This includes periods of startup, shutdown, and malfunction when the affected source is operating.

(1) Before January 20, 2021 the total operating time of each affected source during the reporting period. After January 20, 2021, in the event that an affected unit fails to meet an applicable standard, record the number of failures. For each failure record the date, time and duration of each failure.

(2) Before January 20, 2021 information on the number, duration, and cause of deviations (including unknown cause, if applicable) and the corrective action taken. After January 20, 2021, for each failure to meet an applicable standard, record and retain a list of the cause of deviations (including unknown cause, if applicable), affected sources or equipment, an estimate of the quantity of each regulated pollutant emitted over any emission limit and a description of the method used to estimate the emissions.

(3) After January 20, 2021, record actions taken to minimize emissions in accordance with § 63.5990, and any corrective actions taken to return the affected unit to its normal or usual manner of operation.

(e) Each affected source that has obtained a title V operating permit pursuant to 40 CFR part 70 or 40 CFR part 71 must report all deviations as defined in this subpart in the semiannual monitoring report required by 40 CFR 70.6(a)(3)(iii)(A) or 40 CFR 71.6(a)(3)(iii)(A). If an affected source submits a compliance report (pursuant to Table 10 to this subpart along with, or as part of, the semiannual monitoring report required by 40 CFR 70.6(a)(3)(iii)(A) or 40 CFR 71.6(a)(3)(iii)(A) which includes all required information concerning deviations from any emission limitation (including any operating limit) or work practice requirement in this subpart, submission of the compliance report shall be deemed to satisfy any obligation to report the same deviations in the semiannual monitoring report. However, submission of a compliance report shall not otherwise affect any obligation the affected source may have to report deviations from permit requirements to the permit authority.

(f) Upon notification to the Administrator that a tire production affected source has eliminated or reformulated cement and solvent so that the source can demonstrate compliance using the purchase alternative in § 63.5985(a), future compliance reports for this affected source may be submitted annually.

(g) Before July 24, 2021, or once the reporting form has been available on the CEDRI website for 1-year, whichever date is later, if acceptable to both the Administrator and you, you may submit reports and notifications electronically. Beginning on July 24, 2021, or once the reporting form has been available on the CEDRI website for 1-year, whichever date is later, you must submit compliance reports required in § 63.6010(c)(1) through (10), as applicable, to the EPA via the CEDRI. The CEDRI interface can be accessed through the EPA's CDX (*https://cdx.epa.gov*). You must use the appropriate electronic report form on the CEDRI website (*https://www.epa.gov/electronic-reporting-air-emissions/cedri*) for this subpart. The date on which the report form becomes available will be listed on the CEDRI website. If the reporting form for the compliance report specific to this subpart is not available in CEDRI at the time that the report is due, you must submit the report to the Administrator at the appropriate addresses listed in § 63.13. Once the form has been available in CEDRI for 1-year, you must begin submitting all subsequent reports via CEDRI. The reports must be submitted by the deadlines specified in this subpart, regardless of the method in which the reports are submitted. The EPA will make all the information submitted through CEDRI available to the public without further notice to you. Do not use CEDRI to submit information you claim as CBI. Anything submitted using CEDRI cannot later be claimed to be CBI. Although we do not expect persons to assert a claim of CBI, if persons wish to assert a CBI, if you claim that some of the information required to be submitted via CEDRI is CBI, submit a complete report, including information

sfrattini on LAPJZKW1R2 with $$_JOB
VerDate Sep<11>2014 09:16 Apr 04, 2023 Jkt 256165 PO 00000 Frm 01302 Fmt 8010 Sfmt 8010 Q:\40\256165.XXX PC31

claimed to be CBI, to the EPA. The report must be generated using the appropriate electronic reporting form found on the CEDRI website. Submit the file on a compact disc, flash drive, or other commonly used electronic storage medium and clearly mark the medium as CBI. Mail the electronic medium to U.S. EPA/OAQPS/CORE CBI Office, Attention: Group Leader, Measurement Policy Group, MD C404–02, 4930 Old Page Rd., Durham, NC 27703. The same file with the CBI omitted shall be submitted to the EPA via the EPA's CDX CEDRI as described earlier in this paragraph. All CBI claims must be asserted at the time of submission. Furthermore, under CAA section 114(c) emissions data is not entitled to confidential treatment and requires EPA to make emissions data available to the public. Thus, emissions data will not be protected as CBI and will be made publicly available.

(h) After January 20, 2021, if you use a control system (add-on control device and capture system) to meet the emission limitations, you must also conduct a performance test at least once every 5 years following your initial compliance demonstration to verify control system performance and reestablish operating parameters or operating limits for control systems used to comply with the emissions limits. Within 60 days after the date of completing each performance test required by this subpart, you must submit the results of the performance test following the procedures specified in paragraphs (h)(1) through (3) of this section.

(1) Data collected using test methods supported by the EPA's Electronic Reporting Tool (ERT) as listed on the EPA's ERT website (*https://www.epa.gov/electronic-reporting-air-emissions/electronic-reporting-tool-ert*) at the time of the test. Submit the results of the performance test to the EPA via the CEDRI, which can be accessed through the EPA's CDX (*https://cdx.epa.gov/*). The data must be submitted in a file format generated through the use of the EPA's ERT. Alternatively, you may submit an electronic file consistent with the extensible markup language (XML) schema listed on the EPA's ERT website.

(2) Data collected using test methods that are not supported by the EPA's ERT as listed on the EPA's ERT website at the time of the test. The results of the performance test must be included as an attachment in the ERT or an alternate electronic file consistent with the XML schema listed on the EPA's ERT website. Submit the ERT generated package or alternative file to the EPA via CEDRI.

(3) CBI. If you claim some of the information submitted under paragraph (h) of this section is CBI, you must submit a complete file, including information claimed to be CBI, to the EPA. The file must be generated through the use of the EPA's ERT or an alternate electronic file consistent with the XML schema listed on the EPA's ERT website. Submit the file on a compact disc, flash drive, or other commonly used electronic storage medium and clearly mark the medium as CBI. Mail the electronic medium to U.S. EPA/OAQPS/CORE CBI Office, Attention: Group Leader, Measurement Policy Group, MD C404–02, 4930 Old Page Rd., Durham, NC 27703. The same file with the CBI omitted must be submitted to the EPA via the EPA's CDX as described in paragraph (h) of this section. All CBI claims must be asserted at the time of submission. Furthermore, under CAA section 114(c) emissions data is not entitled to confidential treatment and requires EPA to make emissions data available to the public. Thus, emissions data will not be protected as CBI and will be made publicly available.

(i) After January 20, 2021 if you are required to electronically submit a report or notification (*i.e.,* Notification of Compliance Status Report) through CEDRI in the EPA's CDX, you may assert a claim of the EPA system outage for failure to timely comply with the reporting requirement. To assert a claim of the EPA system outage, you must meet the requirements outlined in paragraphs (i)(1) through (7) of this section.

(1) You must have been or will be precluded from accessing CEDRI and submitting a required report or notification within the time prescribed due to an outage of either the EPA's CEDRI or CDX systems.

sfrattini on LAPJZKW1R2 with $$_JOB
VerDate Sep<11>2014 09:16 Apr 04, 2023 Jkt 256165 PO 00000 Frm 01303 Fmt 8010 Sfmt 8010 Q:\40\256165.XXX PC31

(2) The outage must have occurred within the period of time beginning 5 business days prior to the date that the submission is due.

(3) The outage may be planned or unplanned.

(4) You must submit notification to the Administrator in writing as soon as possible following the date you first knew, or through due diligence should have known, that the event may cause or has caused a delay in reporting.

(5) You must provide to the Administrator a written description identifying:

(i) The date(s) and time(s) when CDX or CEDRI was accessed and the system was unavailable;

(ii) A rationale for attributing the delay in reporting beyond the regulatory deadline to the EPA system outage;

(iii) Measures taken or to be taken to minimize the delay in reporting; and

(iv) The date by which you propose to report, or if you have already met the reporting requirement at the time of the notification, the date you reported.

(6) The decision to accept the claim of the EPA system outage and allow an extension to the reporting deadline is solely within the discretion of the Administrator.

(7) In any circumstance, the report or notification must be submitted electronically as soon as possible after the outage is resolved.

(j) After January 20, 2021 if you are required to electronically submit a report or notification (*i.e.*, Notification of Compliance Status Report) through CEDRI in the EPA's CDX, you may assert a claim of force majeure for failure to timely comply with the reporting requirement. To assert a claim of force majeure, you must meet the requirements outlined in paragraphs (j)(1) through (5) of this section.

(1) You may submit a claim if a force majeure event is about to occur, occurs, or has occurred or there are lingering effects from such an event within the period of time beginning five business days prior to the date the submission is due. For the purposes of this section, a force majeure event is defined as an event that will be or has been caused by circumstances beyond the control of the affected facility, its contractors, or any entity controlled by the affected facility that prevents you from complying with the requirement to submit a report electronically within the time period prescribed. Examples of such events are acts of nature (*e.g.*, hurricanes, earthquakes, or floods), acts of war or terrorism, or equipment failure or safety hazard beyond the control of the affected facility (*e.g.*, large scale power outage).

(2) You must submit notification to the Administrator in writing as soon as possible following the date you first knew, or through due diligence should have known, that the event may cause or has caused a delay in reporting.

(3) You must provide to the Administrator:

(i) A written description of the force majeure event;

(ii) A rationale for attributing the delay in reporting beyond the regulatory deadline to the force majeure event;

(iii) Measures taken or to be taken to minimize the delay in reporting; and

(iv) The date by which you propose to report, or if you have already met the reporting requirement at the time of the notification, the date you reported.

(4) The decision to accept the claim of force majeure and allow an extension to the reporting deadline is solely within the discretion of the Administrator.

(5) In any circumstance, the reporting must occur as soon as possible after the force majeure event occurs.

[67 FR 45598, July 9, 2002, as amended at 85 FR 44762, July 24, 2020]

§ 63.6011 What records must I keep?

(a) You must keep the records specified in paragraphs (a)(1) through (3) of this section.

(1) A copy of each notification and report that you submitted to comply with this subpart, including all documentation supporting any Initial Notification or Notification of Compliance Status that you submitted, according to the requirements in § 63.10(b)(2)(xiv).

(2) Records of performance tests as required in § 63.10(b)(2)(viii).

(3) Before January 21, 2021, the records in § 63.6(e)(3)(iii) through (v) related to startup, shutdown, and malfunction. After January 20, 2021, it is

sfrattini on LAPJZKW1R2 with $$_JOB
VerDate Sep<11>2014 09:16 Apr 04, 2023 Jkt 256165 PO 00000 Frm 01304 Fmt 8010 Sfmt 8010 Q:\40\256165.XXX PC31

not required to keep records in §63.6(e)(3)(iii) through (v) related to startup, shutdown, and malfunction.

(b) For each tire production affected source, you must keep the records specified in Table 9 to this subpart to show continuous compliance with each emission limit that applies to you.

(c) For each tire cord production affected source, you must keep the records specified in Table 11 to this subpart to show continuous compliance with each emission limit that applies to you.

(d) For each puncture sealant application affected source, you must keep the records specified in Table 13 to this subpart to show continuous compliance with each emission limit that applies to you.

(e) After January 20, 2021 any records required to be maintained by this subpart that are submitted electronically via the EPA's CEDRI may be maintained in electronic format. This ability to maintain electronic copies does not affect the requirement for facilities to make records, data, and reports available upon request to a delegated air agency or the EPA as part of an onsite compliance evaluation.

[67 FR 45598, July 9, 2002, as amended at 85 FR 44764, July 24, 2020]

§63.6012 In what form and how long must I keep my records?

(a) Your records must be in a form suitable and readily available for expeditious review, according to §63.10(b)(1).

(b) As specified in §63.10(b)(1), you must keep each record for 5 years following the date of each occurrence, measurement, maintenance, corrective action, report, or record.

(c) You must keep each record on site for at least 2 years after the date of each occurrence, measurement, maintenance, corrective action, report, or record, according to §63.10(b)(1). You can keep the records offsite for the remaining 3 years.

OTHER REQUIREMENTS AND INFORMATION

§63.6013 What parts of the General Provisions apply to me?

Table 17 to this subpart shows which parts of the General Provisions in §§63.1 through 63.15 apply to you.

§63.6014 Who implements and enforces this subpart?

(a) This subpart can be implemented and enforced by us, the United States Environmental Protection Agency, or a delegated authority such as your State, local, or tribal agency. If the U.S. EPA has delegated authority to your State, local, or tribal agency, then that agency, in addition to the U.S. EPA, has the authority to implement and enforce this subpart. You should contact your U.S. EPA Regional Office to find out if implementation and enforcement of this subpart is delegated to your State, local, or tribal agency.

(b) In delegating implementation and enforcement authority of this subpart to a State, local, or tribal agency under 40 CFR part 63, subpart E, the authorities contained in paragraph (c) of this section are retained by the Administrator of the U.S. EPA and are not transferred to the State, local, or tribal agency.

(c) The authorities that cannot be delegated to State, local, or tribal agencies are listed in paragraphs (c)(1) through (4) of this section.

(1) Approval of alternatives to the requirements in §§63.5981 through 63.5984, 63.5986, and 63.5988.

(2) Approval of major changes to test methods under §63.7(e)(2)(ii) and (f) and as defined in §63.90.

(3) Approval of major changes to monitoring under §63.8(f) and as defined in §63.90.

(4) Approval of major changes to recordkeeping and reporting under §63.10(f) and as defined in §63.90.

§63.6015 What definitions apply to this subpart?

Terms used in this subpart are defined in the Clean Air Act and in §63.2, the General Provisions. The following are additional definitions of terms used in this subpart:

sfrattini on LAPJZKW1R2 with $$_JOB
VerDate Sep<11>2014 09:16 Apr 04, 2023 Jkt 256165 PO 00000 Frm 01305 Fmt 8010 Sfmt 8010 Q:\40\256165.XXX PC31

As purchased means the condition of a cement and solvent as delivered to the facility, prior to any mixing, blending, or dilution.

Capture system means a hood, enclosed room, or other means of collecting organic HAP emissions into a closed-vent system that conveys these emissions to a control device.

Cements and solvents means the collection of all organic chemicals, mixtures of chemicals, and compounds used in the production of rubber tires, including cements, solvents, and mixtures used as process aids. Cements and solvents include, but are not limited to, tread end cements, undertread cements, bead cements, tire building cements and solvents, green tire spray, blemish repair paints, side wall protective paints, marking inks, materials used to clean process equipment, and slab dip mixtures. Cements and solvents do not include coatings or process aids used in tire cord production, puncture sealant application, rubber processing, or materials used to construct, repair, or maintain process equipment, or chemicals and compounds that are not used in the tire production process such as materials used in routine janitorial or facility grounds maintenance, office supplies (*e.g.*, dry-erase markers, correction fluid), architectural paint, or any substance to the extent it is used for personal, family, or household purposes, or is present in the same form and concentration as a product packaged for distribution to and use by the general public.

Coating means a compound or mixture of compounds that is applied to a fabric substrate in the tire cord production operation that allows the fabric to be prepared (*e.g.*, by heating, setting, curing) for incorporation into a rubber tire.

Components of rubber tires means any piece or part used in the manufacture of rubber tires that becomes an integral portion of the rubber tire when manufacture is complete and includes mixed rubber compounds, sidewalls, tread, tire beads, and liners. Other components often associated with rubber tires such as wheels, valve stems, tire bladders and inner tubes are not considered components of rubber tires for the purposes of these standards. Tire cord and puncture sealant, although components of rubber tires, are considered as separate affected sources in these standards and are defined separately.

Control device means a combustion device, recovery device, recapture device, or any combination of these devices used for recovering or oxidizing organic hazardous air pollutant vapors. Such equipment includes, but is not limited to, absorbers, carbon adsorbers, condensers, incinerators (oxidizers), flares, boilers, and process heaters.

Control system efficiency means the percent of total volatile organic compound emissions, as measured by EPA Method 25 or 25A (40 CFR part 60, appendix A), recovered or destroyed by a control device multiplied by the percent of total volatile organic compound emissions, as measured by Method 25 or 25A, that are captured and conveyed to the control device.

Deviation means any instance in which an affected source, subject to this subpart, or an owner or operator of such a source:

(1) Fails to meet any requirement or obligation established by this subpart including, but not limited to, any emission limitation (including any operating limit) or work practice standard;

(2) Fails to meet any term or condition that is adopted to implement an applicable requirement in this subpart and that is included in the operating permit for any affected source required to obtain such a permit; or

(3) Before January 21, 2021, fails to meet any emission limitation (including any operating limit) or work practice standard in this subpart during startup, shutdown, and malfunction, regardless of whether or not such failure is permitted by this subpart. On and after January 21, 2021, this paragraph no longer applies.

Emission limitation means any emission limit, opacity limit, operating limit, or visible emission limit.

Fabric processed means the amount of fabric coated and finished for use in subsequent product manufacturing.

Mixed rubber compound means the material, commonly referred to as rubber, from which rubber tires and components of rubber tires are manufactured.

sfrattini on LAPJZKW1R2 with $$_JOB
VerDate Sep<11>2014 09:16 Apr 04, 2023 Jkt 256165 PO 00000 Frm 01306 Fmt 8010 Sfmt 8010 Q:\40\256165.XXX PC31

For the purposes of this definition, mixed rubber compound refers to the compound that leaves the rubber mixing process (*e.g.*, banburys) and is then processed into components from which rubber tires are manufactured.

Monthly operating period means the period in the Notification of Compliance Status report comprised of the number of operating days in the month.

Operating day means the period defined in the Notification of Compliance Status report. It may be from midnight to midnight or a portion of a 24-hour period.

Process aid means a solvent, mixture, or cement used to facilitate or assist in tire component identification; component storage; tire building; tire curing; and tire repair, finishing, and identification.

Puncture sealant means a mixture that may include, but is not limited to, solvent constituents, mixed rubber compound, and process oil that is applied to the inner liner of a finished tire for the purpose of sealing any future hole which might occur in the tread when an object penetrates the tire.

Responsible official means responsible official as defined in 40 CFR 70.2.

Rubber means the sum of the materials (for example, natural rubber, synthetic rubber, carbon black, oils, sulfur) that are combined in specific formulations for the sole purpose of making rubber tires or components of rubber tires.

Rubber mixing means the physical process of combining materials for use in rubber tire manufacturing to make mixed rubber compound using the collection of banburys and associated drop mills.

Rubber tire means a continuous solid or pneumatic cushion typically encircling a wheel and usually consisting, when pneumatic, of an external rubber covering.

Rubber used means the total mass of mixed rubber compound delivered to the tire production operations in a tire manufacturing facility (*e.g.*, the collection of warm-up mills, extruders, calendars, tire building, or other tire component and tire manufacturing equipment).

Tire cord means any fabric (*e.g.*, polyester, cotton) that is treated with a coating mixture that allows the fabric to more readily accept impregnation with rubber to become an integral part of a rubber tire.

[67 FR 45598, July 9, 2002, as amended at 68 FR 11747, Mar. 12, 2003; 85 FR 44764, July 24, 2020]

TABLE 1 TO SUBPART XXXX OF PART 63—EMISSION LIMITS FOR TIRE PRODUCTION AFFECTED SOURCES

As stated in §63.5984, you must comply with the emission limits for each new, reconstructed, or existing tire production affected source in the following table:

For each . . .	You must meet the following emission limits.
1. Option 1—HAP constituent option	a. Emissions of each HAP in Table 16 to this subpart must not exceed 1,000 grams HAP per megagram (2 pounds per ton) of total cements and solvents used at the tire production affected source, and b. Emissions of each HAP not in Table 16 to this subpart must not exceed 10,000 grams HAP per megagram (20 pounds per ton) of total cements and solvents used at the tire production affected source.
2. Option 2—production-based option	Emissions of HAP must not exceed 0.024 grams per megagram (0.00005 pounds per ton) of rubber used at the tire production affected source.

TABLE 2 TO SUBPART XXXX OF PART 63—EMISSION LIMITS FOR TIRE CORD PRODUCTION AFFECTED SOURCES

As stated in §63.5986, you must comply with the emission limits for tire cord production affected sources in the following table:

sfrattini on LAPJZKW1R2 with $$_JOB
VerDate Sep<11>2014 09:16 Apr 04, 2023 Jkt 256165 PO 00000 Frm 01307 Fmt 8010 Sfmt 8026 Q:\40\256165.XXX PC31

For each . . .	You must meet the following emission limits.
1. Option 1.a (production-based option)—Existing tire cord production affected source.	Emissions must not exceed 280 grams HAP per megagram (0.56 pounds per ton) of fabric processed at the tire cord production affected source.
2. Option 1.b (production-based option)—New or reconstructed tire cord production affected source.	Emissions must not exceed 220 grams HAP per megagram (0.43 pounds per ton) of fabric processed at the tire cord production affected source.
3. Option 2 (HAP constituent option)—Existing, new or reconstructed tire cord production affected source.	a. Emissions of each HAP in Table 16 to this subpart must not exceed 1,000 grams HAP per megagram (2 pounds per ton) of total coatings used at the tire cord production affected source, and b. Emissions of each HAP not in Table 16 to this subpart must not exceed 10,000 grams HAP per megagram (20 pounds per ton) of total coatings used at the tire cord production affected source.

Table 3 to Subpart XXXX of Part 63—Emission Limits for Puncture Sealant Application Affected Sources

As stated in §63.5988(a), you must comply with the emission limits for puncture sealant application affected sources in the following table:

For each . . .	You must meet the following emission limit.
1. Option 1.a (percent reduction option)—Existing puncture sealant application spray booth.	Reduce spray booth HAP (measured as volatile organic compounds (VOC)) emissions by at least 86 percent by weight.
2. Option 1.b (percent reduction option)—New or reconstructed puncture sealant application spray booth.	Reduce spray booth HAP (measured as VOC) emissions by at least 95 percent by weight.
3. Option 2 (HAP constituent option) Existing, new or reconstructed puncture sealant application spray booth.	a. Emissions of each HAP in Table 16 to this subpart must not exceed 1,000 grams HAP per megagram (2 pounds per ton) of total puncture sealants used at the puncture sealant affected source, and b. Emissions of each HAP not in Table 16 to this subpart must not exceed 10,000 grams HAP per megagram (20 pounds per ton) of total puncture sealants used at the puncture sealant affected source.

Table 4 to Subpart XXXX of Part 63—Operating Limits for Puncture Sealant Application Control Devices

As stated in §63.5988(b), you must comply with the operating limits for puncture sealant application affected sources in the following table unless you are meeting Option 2 (HAP constituent option) limits in Table 3 to this subpart:

For each . . .	You must . . .
1. Thermal oxidizer to which puncture sealant application spray booth emissions are ducted.	Maintain the daily average firebox secondary chamber temperature within the operating range established during the performance test.
2. Carbon adsorber (regenerative) to which puncture sealant application spray booth emissions are ducted.	a. Maintain the total regeneration mass, volumetric flow, and carbon bed temperature at the operating range established during the performance test. b. Reestablish the carbon bed temperature to the levels established during the performance test within 15 minutes of each cooling cycle.
3. Other type of control device to which puncture sealant application spray booth emissions are ducted.	Maintain your operating parameter(s) within the range(s) established during the performance test and according to your monitoring plan.
4. Permanent total enclosure capture system.	a. Maintain the face velocity across any NDO at least at the levels established during the performance test. b. Maintain the size of NDO, the number of NDO, and their proximity to HAP emission sources consistent with the parameters established during the performance test.
5. Other capture system	Maintain the operating parameters within the range(s) established during the performance test and according to your monitoring plan.

Table 5 to Subpart XXXX of Part 63—Requirements for Performance Tests

As stated in §63.5993, you must comply with the requirements for performance tests in the following table:

sfrattini on LAPJZKW1R2 with $$_JOB
VerDate Sep<11>2014 09:16 Apr 04, 2023 Jkt 256165 PO 00000 Frm 01308 Fmt 8010 Sfmt 8026 Q:\40\256165.XXX PC31

If you are using . . .	You must . . .	Using . . .	According to the following requirements . . .
1. A thermal oxidizer.	a. Measure total HAP emissions, determine destruction efficiency of the control device, and establish a site-specific firebox secondary chamber temperature limit at which the emission limit that applies to the affected source is achieved.	i. Method 25 or 25A performance test and data from the temperature monitoring system.	(1). Measure total HAP emissions and determine the destruction efficiency of the control device using Method 25 (40 CFR part 60, appendix A). You may use Method 25A (40 CFR part 60, appendix A) if: an exhaust gas volatile organic matter concentration of 50 parts per million (ppmv) or less is required to comply with the standard; the volatile organic matter concentration at the inlet to the control system and the required level of control are such that exhaust volatile organic matter concentrations are 50 ppmv or less; or because of the high efficiency of the control device exhaust, is 50 ppmv or less, regardless of the inlet concentration. (2). Collect firebox secondary chamber temperature data every 15 minutes during the entire period of the initial 3-hour performance test, and determine the average firebox temperature over the 3-hour performance test by computing the average of all of the 15-minute reading.
2. A carbon adsorber (regenerative).	a. Measure total organic HAP emissions, establish the total regeneration mass or volumetric flow, and establish the temperature of the carbon bed within 15 minutes of completing any cooling cycles. The total regeneration mass, volumetric flow, and carbon bed temperature must be those at which the emission limit that applies to the affected source is achieved.	i. Method 25 or Method 25A performance test and data from the carbon bed temperature monitoring device.	(1). Measure total HAP emissions using Method 25. You may use Method 25A, if an exhaust gas volatile organic matter concentration of 50 ppmv or less; or because of the high efficiency of the control device, exhaust is 50 ppmv or less is required to comply with the standard; the volatile organic matter concentration (VOMC) at the inlet to the control system and the required level of control are such that exhaust VOMCs are 50 ppmv or less; or because of the high efficiency of the control device, exhaust is 50 ppmv or less, regardless of the inlet concentration. (2). Collect carbon bed total regeneration mass or volumetric flow for each carbon bed regeneration cycle during the performance test. (3). Record the maximum carbon bed temperature data for each carbon bed regeneration cycle during the performance test. (4). Record the carbon bed temperature within 15 minutes of each cooling cycle during the performance test. (5). Determine the average total regeneration mass or the volumetric flow over the 3-hour performance test by computing the average of all of the readings. (6). Determine the average maximum carbon bed temperature over the 3-hour performance test by computing the average of all of the readings. (7). Determine the average carbon bed temperature within 15 minutes of the cooling cycle over the 3-hour performance test.
3. Any control device other than a thermal oxidizer or carbon adsorber.	Determine control device efficiency and establish operating parameter limits with which you will demonstrate continuous compliance with the emission limit that applies to the affected source.	EPA-approved methods and data from the continuous parameter monitoring system.	Conduct the performance test according to the site-specific plan submitted according to § 63.7(c)(2)(i).
4. All control devices.	a. Select sampling ports' location and the number of traverse ports.	Method 1 or 1A of 40 CFR part 60, appendix A.	Locate sampling sites at the inlet and outlet of the control device and prior to any releases to the atmosphere.
	b. Determine velocity and volumetric flow rate.	Method 2, 2A, 2C, 2D, 2F, or 2G of 40 CFR part 60, appendix A.	
	c. Conduct gas analysis ...	Method 3, 3A, or 3B of 40 CFR part 60 appendix A.	
	d. Measure moisture content of the stack gas.	Method 4 of 40 CFR part 60, appendix A.	

sfrattini on LAPJZKW1R2 with $$_JOB
VerDate Sep<11>2014 09:16 Apr 04, 2023 Jkt 256165 PO 00000 Frm 01309 Fmt 8010 Sfmt 8002 Q:\40\256165.XXX PC31

If you are using . . .	You must . . .	Using . . .	According to the following requirements . . .
5. A permenent total enclosure (PTE).	Measure the face velocity across natural draft openings and document the design features of the enclosure.	Method 204 of CFR part 51, appendix M.	Capture efficiency is assumed to be 100 percent if the criteria are met
6. Temporary total enclosure (TTE).	Construct a temporarily installed enclosure that allows you to determine the efficiency of your capture system and establish operating parameter limits.	Method 204 and the appropriate combination of Methods 204A–204F of 40 CFR part 51, appendix M.	

TABLE 6 TO SUBPART XXXX OF PART 63—INITIAL COMPLIANCE WITH THE EMISSION LIMITS FOR TIRE PRODUCTION AFFECTED SOURCES

As stated in § 63.5996, you must show initial compliance with the emission limits for tire production affected sources according to the following table:

For . . .	For the following emission limit . . .	You have demonstrated initial compliance if . . .
1. Sources complying with the purchase compliance alternative in § 63.5985(a).	The HAP constituent option in Table 1 to this subpart, option 1.	You demonstrate for each monthly period that no cements and solvents were purchased and used at the affected source containing HAP in amounts above the composition limits in Table 1 to this subpart, option 1, determined according to the procedures in § 63.5994(a) and (b)(1).
2. Sources complying with the monthly average compliance alternative without using a control device in § 63.5985(b).	The HAP constituent option in Table 1 to this subpart, option 1.	You demonstrate that the monthly average HAP emissions for each monthly operating period do not exceed the emission limits in Table 1 to this subpart, option 1, determined according to the applicable procedures in § 63.5994(a) and (b)(2).
3. Sources complying with the monthly average compliance alternative using a control device in § 63.5985(c).	The HAP constituent option in Table 1 to this subpart, option 1.	You demonstrate that the monthly average HAP emissions for each monthly operating period do not exceed the emission limits in Table 1 to this subpart, option 1, determined according to the applicable procedures in § 63.5994(a), (b)(3) and (4), and (d) through (f).
4. Sources complying with the monthly average compliance alternative without use of a control device in § 63.5985(b).	The production-based option in Table 1 to this subpart, option 2.	You demonstrate that the monthly average HAP emissions for each monthly operating period do not exceed the emission limits in Table 1 to this subpart, option 2, determined according to the applicable procedures in § 63.5994(c)(1) through (3).
5. Sources complying with the monthly average compliance alternative using a control device in § 63.5985(c).	The production-based option in Table 1 to this subpart, option 2.	You demonstrate that the monthly average HAP emissions for each monthly operating period do not exceed the emission limits in Table 1 to this subpart, option 2, determined according to the applicable procedures in § 63.5994(c)(1) and (2), (4) and (5), and (d) through (f).

TABLE 7 TO SUBPART XXXX OF PART 63—INITIAL COMPLIANCE WITH THE EMISSION LIMITS FOR TIRE CORD PRODUCTION AFFECTED SOURCES

As stated in § 63.5999, you must show initial compliance with the emission limits for tire cord production affected sources according to the following table:

For . . .	For the following emission limit . . .	You have demonstrated initial compliance if . . .
1. Sources complying with the monthly average alternative without using an add-on control device according to § 63.5987(a).	The production-based option in Table 2 to this subpart, option 1.	You demonstrate that the monthly average HAP emissions for each monthly operating period do not exceed the emission limits in Table 2 to this subpart, option 1, determined according to the procedures in § 63.5997(a), (b)(1) and (2).
2. Sources complying with the monthly average alternative using an add-on control device according to § 63.5987(b).	The production-based option in Table 2 to this subpart, option 1.	You demonstrate that the monthly average HAP emissions for each monthly operating period do not exceed the emission limits in Table 2 to this subpart, option 1, determined according to the procedures in § 63.5997(a), (b)(1) and (3) through (4), and (d) through (f).

sfrattini on LAPJZKW1R2 with $$_JOB
VerDate Sep<11>2014 09:16 Apr 04, 2023 Jkt 256165 PO 00000 Frm 01310 Fmt 8010 Sfmt 8002 Q:\40\256165.XXX PC31

For . . .	For the following emission limit . . .	You have demonstrated initial compliance if . . .
3. Sources complying with the monthly average alternative without using an add-on control device according to § 63.5987(a).	The HAP constituent option in Table 2 to this subpart, option 2.	You demonstrate that the monthly average HAP emissions for each monthly operating period do not exceed the HAP constituent emission limits in Table 2 to this subpart, option 2, determined according to the applicable procedures in § 63.5997(a) and (c)(1) and (2).
4. Sources complying with the monthly average alternative using an add-on control device according to § 63.5987(b).	The HAP constituent option in Table 2 to this subpart, option 2.	You demonstrate that the monthly average HAP emissions for each monthly operating period do not exceed the HAP constituent emission limits in Table 2 to this subpart, option 2, determined according to the applicable procedures in § 63.5997(c)(1) and (3) through (4), and (d) through (f).

TABLE 8 TO SUBPART XXXX OF PART 63—INITIAL COMPLIANCE WITH THE EMISSION

As stated in § 63.6002, you must show initial compliance with the emission limits for puncture sealant application affected sources according to the following table:

For . . .	For the following emission limit . . .	You have demonstrated initial compliance if . . .
1. Sources complying with the overall control efficiency alternative in § 63.5989(a).	The percent reduction option in Table 3 to this subpart, option 1.	You demonstrate that you conducted the performance tests, determined the overall efficiency of your control system, demonstrated that the applicable limits in Table 3 to this subpart, option 1, have been achieved, and established the operating limits in Table 4 of this subpart for your equipment according to the applicable procedures in § 63.6000(b).
2. Sources complying with the permanent total enclosure and control device efficiency alternative in § 63.5989(b).	The percent reduction option in Table 3 to this subpart, option 1.	You demonstrate that you conducted the performance tests, determined the individual efficiencies of your capture and control systems, demonstrated that the applicable limits in Table 3 to this subpart, option 1, have been achieved, and established the operating limits in Table 4 of this subpart for your equipment according to the applicable procedures in § 63.6000(b).
3. Sources complying with the monthly average alternative in § 63.5989(c) without using an add-on control device.	The HAP constituent option in Table 3 to this subpart, option 2.	You demonstrate that the monthly average HAP emissions for each monthly operating period do not exceed the HAP constituent emission limits in Table 3 to this subpart, option 2, determined according to the applicable procedures in § 63.6000(c) and (d)(1).
4. Sources complying with the HAP constituent alternative in § 63.5989(d) by using an add-on control device.	The HAP constituent option in Table 3 to this subpart, option 2.	You demonstrate that the monthly average HAP emissions for each monthly operating period do not exceed the HAP constituent emission limits in Table 3 to this subpart, option 2, determined according to the applicable procedures in § 63.6000(c), (d)(2) and (3), and (e) through (f).

TABLE 9 TO SUBPART XXXX OF PART 63—MINIMUM DATA FOR CONTINUOUS COMPLIANCE WITH THE EMISSION LIMITS FOR TIRE PRODUCTION AFFECTED SOURCES

As stated in § 63.6003, you must maintain minimum data to show continuous compliance with the emission limits for tire production affected sources according to the following table:

For . . .	You must maintain . . .
1. Sources complying with purchase compliance alternative in § 63.5985(a) that are meeting the HAP constituent emission limit (option 1) in Table 1 to this subpart.	a. A list of each cement and solvent as purchased and the manufacturer or supplier of each. b. A record of Method 311 (40 CFR part 60, appendix A), or approved alternative method, test results indicating the mass percent of each HAP for each cement and solvent as purchased.
2. Sources complying with the monthly average compliance alternative without using a control device according to § 63.5985(b) that are meeting emission limits in Table 1 to this subpart.	a. A record of Method 311, or approved alternative method, test results, indicating the mass percent of each HAP for each cement and solvent, as purchased. b. The mass of each cement and solvent used each monthly operating period. c. The total mass of rubber used each monthly operating period (if complying with the production-based emission limit, option 2, in Table 1 to this subpart). d. All data and calculations used to determine the monthly average mass percent for each HAP for each monthly operating period. e. Monthly averages of emissions in the appropriate emission limit format.
3. Sources complying with the monthly average compliance alternative using a control device according to § 63.5985(c) that are meeting emission limits in Table 1 to this subpart.	a. The same information as sources complying with the monthly average alternative without using a control device. b. Records of operating parameter values for each operating parameter that applies to you.

sfrattini on LAPJZKW1R2 with $$_JOB
VerDate Sep<11>2014 09:16 Apr 04, 2023 Jkt 256165 PO 00000 Frm 01311 Fmt 8010 Sfmt 8026 Q:\40\256165.XXX PC31

TABLE 10 TO SUBPART XXXX OF PART 63—CONTINUOUS COMPLIANCE WITH THE EMISSION LIMITS FOR TIRE PRODUCTION AFFECTED SOURCES

As stated in § 63.6004, you must show continuous compliance with the emission limits for tire production affected sources according to the following table:

For . . .	For the following emission limit . . .	You must demonstrate continuous compliance by . . .
1. Sources complying with purchase compliance alternative in § 63.5985(a).	The HAP constituent option in Table 1 to this subpart, option 1.	Demonstrating for each monthly period that no cements and solvents were purchased and used at the affected source containing HAP in amounts above the composition limits in Table 1 to this subpart, option 1, determined according to the procedures in § 63.5994(a) and (b)(1).
2. Sources complying with the monthly average compliance alternative without using a control device according to § 63.5985(b).	The HAP constituent option in Table 1 to this subpart, option 1.	Demonstrating that the monthly average HAP emissions for each monthly operating period do not exceed the emission limits in Table 1 to this subpart, option 1, determined according to the applicable procedures in § 63.5994(a) and (b)(2).
3. Sources complying with the monthly average compliance alternative using a control device according to § 63.5985(c).	The HAP constituent option in Table 1 to this subpart, option 1.	Demonstrating that the monthly average HAP emissions for each monthly operating period do not exceed the emission limits in Table 1 to this subpart, option 1, determined according to the applicable procedures in § 63.5994(a), (b)(3) and (4), and (d) through (f).
4. Sources complying with the monthly average compliance alternative without using a control device according to § 63.5985(b).	The production-based option in Table 1 to this subpart, option 2.	Demonstrating that the monthly average HAP emissions for each monthly operating period do not exceed the emission limits in Table 1 to this subpart, option 2, determined according to the applicable procedures in § 63.5994(c)(1) through (3).
5. Sources complying with the monthly average compliance alternative using a control device according to § 63.5985(c).	The production-based option in Table 1 to this subpart, option 2.	Demonstrating that the monthly average HAP emissions for each monthly operating period do not exceed the emission limits in Table 1 to this subpart, option 2, determined according to the applicable procedures in § 63.5994(c)(1) and (2), (4) and (5), and (d) through (f).

TABLE 11 TO SUBPART XXXX OF PART 63—MINIMUM DATA FOR CONTINUOUS COMPLIANCE WITH THE EMISSION LIMITS FOR TIRE CORD PRODUCTION AFFECTED SOURCES

As stated in § 63.6005, you must maintain minimum data to show continuous compliance with the emission limits for tire cord production affected sources according to the following table:

For . . .	You must maintain . . .
1. Sources complying with the monthly average alternative without using an add-on control device according to § 63.5987(a) that are meeting emission limits in Table 2 to this subpart.	a. A record of Method 311 (40 CFR part 63, appendix A), or approved alternative method, test results, indicating the mass percent of each HAP for coating used. b. The mass of each coating used each monthly operating period. c. The total mass of fabric processed each monthly operating period (if complying with the production-based option in Table 2 to this subpart, option 1). d. All data and calculations used to determine the monthly average mass percent for each HAP for each monthly operating period. e. Monthly averages of emissions in the appropriate emission emission limit format.
2. Sources complying with the monthly average alternative using an add-on control device according to § 63.5987(b) that are meeting emission limits in Table 2 to this subpart.	a. The same information as sources complying with the monthly average alternative without using a control device. b. Records of operating parameter values for each operating parameter that applies to you.

TABLE 12 TO SUBPART XXXX OF PART 63—CONTINUOUS COMPLIANCE WITH THE EMISSION LIMITS FOR TIRE CORD PRODUCTION AFFECTED SOURCES

As stated in § 63.6006, you must show continuous compliance with the emission limits for tire cord production affected sources according to the following table:

sfrattini on LAPJZKW1R2 with $$_JOB
VerDate Sep<11>2014 09:16 Apr 04, 2023 Jkt 256165 PO 00000 Frm 01312 Fmt 8010 Sfmt 8026 Q:\40\256165.XXX PC31

For . . .	For the following emission limit . . .	You must demonstrate continuous compliance by . . .
1. Sources complying with the monthly average compliance alternative without using an add-on control device according to § 63.5987(a).	In Table 2 to this subpart.	a. Demonstrating that the monthly average HAP emissions for each monthly operating period do not exceed the emission limits in Table 2 to this subpart, option 1, determined according to the applicable procedures in § 63.5997(a) and (b)(1) and (2). b. Demonstrating that the monthly average HAP emissions for each monthly operating period do not exceed the HAP constituent emission limits in Table 2 to this subpart, option 2, determined according to the applicable procedures in § 63.5997(a) and (c)(1) and (2).
2. Sources complying with the monthly average compliance alternative using an add-on control device according to § 63.5987(b).	In Table 2 to this subpart.	a. Demonstrating that the monthly average HAP emissions for each monthly operating period do not exceed the emission limits in Table 2 to this subpart, option 1, determined according to the applicable procedures in § 63.5997(a), (b)(1) and (3) through (4), and (d) through (f). b. Demonstrating that the monthly HAP emissions for each monthly operating period do not exceed the HAP constituent emission limits in Table 2 to this subpart, option 2, determined according to the applicable procedures in § 63.5997(c)(1) and (3) through (4), and (d) through (f).

Table 13 to Subpart XXXX of Part 63—Minimum Data for Continuous Compliance With the Emission Limitations for Puncture Sealant Application Affected Sources

As stated in § 63.6007, you must maintain minimum data to show continuous compliance with the emission limitations for puncture sealant application affected sources according to the following table:

For . . .	You must maintain . . .
1. Sources complying with the control efficiency alternatives in § 63.5989(a) or (b) that are meeting the percent reduction emission limits in Table 3 to this subpart, option 1, using a thermal oxidizer to reduce HAP emissions so that they do not exceed the operating limits in Table 4 to this subpart.	Records of the secondary chamber firebox temperature for 100 percent of the hours during which the process was operated.
2. Sources complying with the control efficiency alternatives in § 63.5989(a) or (b) that are meeting the percent reduction emission limits in Table 3 to this subpart, option 1, using a carbon adsorber to reduce HAP emissions so that they do not exceed the operating limits in Table 4 to this subpart.	Records of the total regeneration stream mass or volumetric flow for each regeneration cycle for 100 percent of the hours during which the process was operated, and a record of the carbon bed temperature after each regeneration, and within 15 minutes of completing any cooling cycle for 100 percent of the hours during which the process was operated.
3. Sources complying with the control efficiency alternatives in § 63.5989(a) or (b) that are meeting the percent reduction emission limits in Table 3 to this subpart, option 1, using any other type of control device to which puncture sealant application spray booth HAP emissions are ducted so that they do not exceed the operating limits in Table 4 to this subpart.	Records of operating parameter values for each operating parameter that applies to you.
4. Sources complying with the permanent total enclosure compliance alternative in § 63.5989(b) that are meeting the percent reduction emission limits in Table 3 to this subpart, option 1, using a permanent total enclosure capture system to capture HAP emissions so that they do not exceed the operating limits in Table 4 to this subpart.	Records of the face velocity across any NDO, the size of NDO, the number of NDO, and their proximity to HAP emission sources.

sfrattini on LAPJZKW1R2 with $$_JOB
VerDate Sep<11>2014 09:16 Apr 04, 2023 Jkt 256165 PO 00000 Frm 01313 Fmt 8010 Sfmt 8002 Q:\40\256165.XXX PC31

For . . .	You must maintain . . .
5. Sources complying with the overall control efficiency alternative in § 63.5989(a) that are meeting the percent reduction emission limits in Table 3 to this subpart, option 1, using any other capture system to capture HAP emissions so that they do not exceed the operating limits in Table 4 to this subpart.	Records of operating parameter values for each operating parameter that applies to you.
6. Sources complying with the monthly average alternative without using an add-on control device according to § 63.5988(a) that are meeting the HAP constituent emission limits in Table 3 to this subpart, option 2.	a. A record of Method 311 (40 CFR part 63, appendix A), or approved alternative method, test results, indicating the mass percent of each HAP for puncture sealant used. b. The mass of each puncture sealant used each monthly operating period. c. All data and calculations used to determine the monthly average mass percent for each HAP for each monthly operating period. d. Monthly averages of emissions in the appropriate emission limit format.
7. Sources complying with the monthly average alternative using an add-on control device according to § 63.5988(a) that are meeting the HAP constituent emission limits in Table 3 to this subpart, option 2.	a. The same information as sources complying with the monthly average alternative that are not using a control device. b. Records of operating parameter values for each operating parameter that applies to you.

Table 14 to Subpart XXXX of Part 63—Continuous Compliance With the Emission Limitations for Puncture Sealant Application Affected Sources

As stated in § 63.6008, you must show continuous compliance with the emission limitations for puncture sealant application affected sources according to the following table:

For . . .	You must demonstrate continuous compliance by . . .
1. Each carbon adsorber used to comply with the operating limits in Table 4 to this subpart.	a. Monitoring and recording every 15 minutes the total regeneration stream mass or volumetric flow, and the carbon bed temperature after each regeneration, and within 15 minutes of completing any cooling cycle, and b. Maintaining the total regeneration stream mass or volumetric flow, and the carbon bed temperature after each regeneration, and within 15 minutes of completing any cooling cycle within the operating levels established during your performance test.
2. Each thermal oxidizer used to comply with operating limits in Table 4 to this subpart.	a. Continuously monitoring and recording the firebox temperature every 15 minutes, and b. Maintaining the daily average firebox temperature within the operating level established during your performance test.
3. Other "add-on" control or capture system hardware used to comply with the operating limits in Table 4 to this subpart.	Continuously monitoring and recording specified parameters identified through compliance testing and identified in the Notification of Compliance Status report.
4. Sources complying with the monthly average compliance alternative without using an add-on control device according to § 63.5989(c) that are meeting the HAP constituent emission limits in Table 3 to this subpart, option 2.	Demonstrating that the monthly average HAP emissions for each monthly operating period do not exceed the HAP constituent emission limits in Table 3 to this subpart, option 2, determined according to the applicable procedures in § 63.6000(c) and (d)(1).
5. Sources complying with the monthly average compliance alternative by using an add-on control device according to § 63.5989(d) that are the HAP constituent emission limits in Table 3 to this subpart, option 2.	Demonstrating that the monthly average HAP emissions for each monthly operating period do not exceed the HAP constituent emission limits in Table 3 to this subpart, option 2, determined according to the applicable procedures in § 63.6000(c), (d)(2) and (3), and (e) through (g).

Table 15 to Subpart XXXX of Part 63—Requirements for Reports

[As stated in § 63.6010, you must submit each report that applies to you according to the following table]

You must submit a(n)	The report must contain . . .	You must submit the report . . .
1. Compliance report	a. If there are no deviations from any emission limitations that apply to you, a statement that there were no deviations from the emission limitations during the reporting period. If there were no periods during which the CPMS was out-of-control as specified in § 63.8(c)(7), a statement that there were no periods during which the CPMS was out-of-control during the reporting period.	Semiannually according to the requirements in § 63.6010(b), unless you meet the requirements for annual reporting in § 63.6010(f).

sfrattini on LAPJZKW1R2 with $$_JOB
VerDate Sep<11>2014 09:16 Apr 04, 2023 Jkt 256165 PO 00000 Frm 01314 Fmt 8010 Sfmt 8002 Q:\40\256165.XXX PC31

[As stated in § 63.6010, you must submit each report that applies to you according to the following table]

You must submit a(n)	The report must contain . . .	You must submit the report . . .
	b. If you have a deviation from any emission limitation during the reporting period at an affected source where you are not using a CPMS, the report must contain the information in § 63.6010(d). If the deviation occurred at a source where you are using a CMPS or if there were periods during which the CPMS were out-of-control as specified in § 63.8(c)(7), the report must contain the information required by § 63.5990(f)(3).	Semiannually according to the requirements in § 63.6010(b), unless you meet the requirements for annual reporting in § 63.6010(f).
	c. Before January 21, 2021, If you had a startup, shutdown, and malfunction during the reporting period and you took actions consistent with your startup, shutdown, and malfunction plan, the compliance report must include the information in § 63.10(d)(5)(i). After January 20, 2021, this information is no longer required.	Before January 21, 2021, semiannually according to the requirements in § 63.6010(b), unless you meet the requirements for annual reporting in § 63.6010(f). After January 20, 2021, this information is no longer required.
2. Before January 21, 2021, immediate startup, shutdown, and malfunction report if you had a startup, shutdown, and malfunction during the reporting period that is not consistent with your startup, shutdown, and malfunction plan. After January 20, 2021, this report is no longer required.	a. Before January 21, 2021, actions taken for the event. After January 20, 2021, this report is no longer required.	Before January 21, 2021, by fax or telephone within 2 working days after starting actions inconsistent with the plan. After January 20, 2021, this report is no longer required.
	b. Before January 21, 2021, the information in § 63.10(d)(5)(ii). After January 20, 2021, this report is no longer required.	Before January 21, 2021, by letter within 7 working days after the end of the event unless you have made alternative arrangements with the permitting authority (§ 63.10(d)(5)(ii)). After January 20, 2021, this report is no longer required.
3. Performance Test Report	If you use a control system (add-on control device and capture system) to meet the emission limitations.	Conduct a performance test at least once every 5 years following your initial compliance demonstration according to the requirements in § 63.5993.

[85 FR 44765, July 24, 2020]

Table 16 to Subpart XXXX of Part 63—Selected Hazardous Air Pollutants

You must use the information listed in the following table to determine which emission limit in the HAP constituent options in Tables 1 through 3 to this subpart is applicable to you:

CAS No.	Selected hazardous air pollutants
50000	Formaldehyde
51796	Ethyl carbamate (Urethane)
53963	2-Acetylaminofluorene
56235	Carbon tetrachloride
57147	1,1-Dimethyl hydrazine
57578	beta-Propiolactone
58899	Lindane (all isomers)
59892	N-Nitrosomorpholine
60117	Dimethyl aminoazobenzene
62759	N-Nitrosodimethylamine
64675	Diethyl sulfate
67663	Chloroform
67721	Hexachloroethane
71432	Benzene (including benzene from gasoline)
75014	Vinyl chloride
75070	Acetaldehyde

sfrattini on LAPJZKW1R2 with $$_JOB
VerDate Sep<11>2014 09:16 Apr 04, 2023 Jkt 256165 PO 00000 Frm 01315 Fmt 8010 Sfmt 8002 Q:\40\256165.XXX PC31

CAS No.	Selected hazardous air pollutants
75092	Methylene chloride (Dichloromethane)
75218	Ethylene oxide
75558	1,2-Propylenimine (2-Methyl aziridine)
75569	Propylene oxide
77781	Dimethyl sulfate
79061	Acrylamide
79447	Dimethyl carbamoyl chloride
79469	2-Nitropropane
88062	2,4,6-Trichlorophenol
91941	3,3-Dichlorobenzidene
92671	4-Aminobiphenyl
92875	Benzidine
95534	o-Toluidine
95807	2,4-Toluene diamine
96128	1,2-Dibromo-3-chloropropane
96457	Ethylene thiourea
98077	Benzotrichloride
101144	4,4-Methylene bis(2-chloroaniline)
101779	4,4-Methylenedianiline
106467	1,4-Dichlorobenzene(p)
106898	Epichlorohydrin (l-Chloro-2,3-epoxypropane)
106934	Ethylene dibromide (Dibromoethane)
106990	1,3-Butadiene
107062	Ethylene dichloride (1,2-Dichloroethane)
107131	Acrylonitrile
107302	Chloromethyl methyl ether
117817	Bis(2-ethylhexyl)phthalate (DEHP)
118741	Hexachlorobenzene
119904	3,3-Dimethoxybenzidine
119937	3,3-Dimethyl benzidine
122667	1,2-Diphenylhydrazine
123911	1,4-Dioxane (1,4-Diethyleneoxide)
127184	Tetrachloroethylene (Perchloroethylene)
140885	Ethyl acrylate
302012	Hydrazine
542756	1,3-Dichloropropene
542881	Bis(chloromethyl)ether
680319	Hexamethylphosphoramide
684935	N-Nitroso-N-methylurea
1120714	1,3-Propane sultone
1332214	Asbestos
1336363	Polychlorinated biphenyls (Aroclors)
1746016	2,3,7,8-Tetrachlorodibenzo-p-dioxin
8001352	Toxaphene (chlorinated camphene)
	Arsenic Compounds
	Chromium Compounds
	Coke Oven Emissions

TABLE 17 TO SUBPART XXXX OF PART 63—APPLICABILITY OF GENERAL PROVISIONS TO THIS SUBPART XXXX

Before January 21, 2021, as stated in § 63.6013, you must comply with the applicable General Provisions (GP) requirements according to the following table:

Citation	Subject	Brief description of applicable sections	Applicable to Subpart XXXX?	
			Using a control device	Not using a control device
§ 63.1	Applicability	Initial applicability determination; applicability after standard established; permit requirements; extensions; notifications.	Yes	Yes.
§ 63.2	Definitions	Definitions for part 63 standards	Yes	Yes.
§ 63.3	Units and Abbreviations.	Units and abbreviations for part 63 standards	Yes	Yes.
§ 63.4	Prohibited Activities	Prohibited activities; compliance date; circumvention; severability.	Yes	Yes.
§ 63.5	Construction/Reconstruction.	Applicability; applications; approvals	Yes	Yes.
§ 63.6(a)	Applicability	GP apply unless compliance extension; GP apply to area sources that become major.	Yes	Yes.

sfrattini on LAPJZKW1R2 with $$_JOB
VerDate Sep<11>2014 09:16 Apr 04, 2023 Jkt 256165 PO 00000 Frm 01316 Fmt 8010 Sfmt 8002 Q:\40\256165.XXX PC31

Citation	Subject	Brief description of applicable sections	Applicable to Subpart XXXX?	
			Using a control device	Not using a control device
§ 63.6(b)(1)–(4)	Compliance Dates for New and Reconstructed Sources.	Standards apply at effective date; 3 years after effective date; upon startup; 10 years after construction or reconstruction commences for CAA section 112(f).	Yes	Yes.
§ 63.6(b)(5)	Notification	Must notify if commenced construction or reconstruction after proposal.	Yes	Yes.
§ 63.6(b)(6)	[Reserved]	.		
§ 63.6(b)(7)	Compliance Dates for New and Reconstructed Area Sources that Become Major.		No	No.
§ 63.6(c)(1)–(2)	Compliance Dates for Existing Sources.	Comply according to date in subpart, which must be no later than 3 years after effective date; for CAA section 112(f) standards, comply within 90 days of effective date unless compliance extension.	Yes	Yes.
§ 63.6(c)(3)–(4)	[Reserved]			
§ 63.6(c)(5)	Compliance Dates for Existing Area Sources that Become Major.	Area sources that become major must comply with major source standards by date indicated in subpart or by equivalent time period (for example, 3 years).	Yes	Yes.
§ 63.6(d)	[Reserved]			
§ 63.6(e)(1)–(2)	Operation & Maintenance.	Operate to minimize emissions at all times; correct malfunctions as soon as practicable; and operation and maintenance requirements independently enforceable; information Administrator will use to determine if operation and maintenance requirements were met.	Yes	Yes.
§ 63.6(e)(3)	Startup, Shutdown, and Malfunction Plan.		Yes	No.
§ 63.6(f)(1)	Compliance Except During Startup, Shutdown, and Malfunction.		No. See § 63.5990(a).	No.
§ 63.6(f)(2)–(3)	Methods for Determining Compliance.	Compliance based on performance test; operation and maintenance plans; records; inspection.	Yes	Yes.
§ 63.6(g)(1)–(3)	Alternative Standard	Procedures for getting an alternative standard	Yes	Yes.
§ 63.6(h)	Opacity/Visible Emission (VE) Standards.		No	No.
§ 63.6(i)	Compliance Extension	Procedures and criteria for Administrator to grant compliance extension.	Yes	Yes.
§ 63.6(j)	Presidential Compliance Exemption.	President may exempt source category from requirement to comply with rule.	Yes	Yes.
§ 63.7(a)(1)–(2)	Performance Test Dates.		No	No.
§ 63.7(a)(3)	CAA section 114 Authority.	Administrator may require a performance test under CAA section 114 at any time.	Yes	No.
§ 63.7(b)(1)	Notification of Performance Test.	Must notify Administrator 60 days before the test.	Yes	No.
§ 63.7(b)(2)	Notification of Rescheduling.	If rescheduling a performance test is necessary, must notify Administrator 5 days before scheduled date of rescheduled date.	Yes	No.
§ 63.7(c)	Quality Assurance/ Test Plan.	Requirement to submit site-specific test plan 60 days before the test or on date Administrator agrees with: test plan approval procedures; performance audit requirements; and internal and external quality assurance procedures for testing.	Yes	No.
§ 63.7(d)	Testing Facilities	Requirements for testing facilities	Yes	No.
§ 63.7(e)(1)	Conditions for Conducting Performance Tests.	Performance tests must be conducted under representative conditions; cannot conduct performance tests during startup, shutdown, and malfunction; not a violation to exceed standard during startup, shutdown, and malfunction.	Yes	No.

sfrattini on LAPJZKW1R2 with $$_JOB
VerDate Sep<11>2014 09:16 Apr 04, 2023 Jkt 256165 PO 00000 Frm 01317 Fmt 8010 Sfmt 8002 Q:\40\256165.XXX PC31

Citation	Subject	Brief description of applicable sections	Applicable to Subpart XXXX?	
			Using a control device	Not using a control device
§ 63.7(e)(2)	Conditions for Conducting Performance Tests.	Must conduct according to rule and the EPA test methods unless Administrator approves alternative.	Yes	No.
§ 63.7(e)(3)	Test Run Duration	Must have three test runs of at least 1 hour each; compliance is based on arithmetic mean of three runs; and conditions when data from an additional test run can be used.	Yes	No.
§ 63.7(f)	Alternative Test Method.	Procedures by which Administrator can grant approval to use an alternative test method.	Yes	No.
§ 63.7(g)	Performance Test Data Analysis.	Must include raw data in performance test report; must submit performance test data 60 days after end of test with the Notification of Compliance Status report; and keep data for 5 years.	Yes	No.
§ 63.7(h)	Waiver of Tests	Procedures for Administrator to waive performance test.	Yes	No.
§ 63.8(a)(1)	Applicability of Monitoring Requirements.	Subject to all monitoring requirements in standard.	Yes	Yes.
§ 63.8(a)(2)	Performance Specifications.	Performance Specifications in appendix B of 40 CFR part 60 apply.	Yes	No.
§ 63.8(a)(3)	[Reserved]			
§ 63.8(a)(4)	Monitoring with Flares		No	No.
§ 63.8(b)(1)	Monitoring	Must conduct monitoring according to standard unless Administrator approves alternative.	Yes	Yes.
§ 63.8(b)(2)–(3)	Multiple Effluents and Multiple Monitoring Systems.	Specific requirements for installing monitoring systems; must install on each effluent before it is combined and before it is released to the atmosphere unless Administrator approves otherwise; if more than one monitoring system on an emission point, must report all monitoring system results, unless one monitoring system is a backup.	Yes	Yes.
§ 63.8(c)(1)	Monitoring System Operation and Maintenance.	Maintain monitoring system in a manner consistent with good air pollution control practices.	Applies as modified by § 63.5990(e) and (f).	No.
§ 63.8(c)(1)(i)	Routine and Predictable Startup, Shutdown, and Malfunction.		No	No.
§ 63.8(c)(1)(ii)	Startup, Shutdown, and Malfunction not in Startup, Shutdown, and Malfunction Plan.		No	No.
§ 63.8(c)(1)(iii)	Compliance with Operation and Maintenance Requirements.	How Administrator determines if source complying with operation and maintenance requirements; review of source operation and maintenance procedures, records, manufacturer's instructions, recommendations, and inspection of monitoring system.	Yes	Yes.
§ 63.8(c)(2)–(3)	Monitoring System Installation.	Must install to get representative emission and parameter measurements; must verify operational status before or at performance test.	Yes	No.
§ 63.8(c)(4)	CMS Requirements		Applies as modified by § 63.5990(f).	No.
§ 63.8(c)(5)	Continuous Opacity Monitoring Systems Minimum Procedures.		No	No.
§ 63.8(c)(6)	CMS Requirements		Applies as modified by § 63.5990(e).	No.
§ 63.8(c)(7)–(8)	CMS Requirements	Out-of-control periods, including reporting	Yes	No.

sfrattini on LAPJZKW1R2 with $$_JOB
VerDate Sep<11>2014 09:16 Apr 04, 2023 Jkt 256165 PO 00000 Frm 01318 Fmt 8010 Sfmt 8002 Q:\40\256165.XXX PC31

Citation	Subject	Brief description of applicable sections	Applicable to Subpart XXXX?	
			Using a control device	Not using a control device
§ 63.8(d)	CMS Quality Control		Applies as modified by § 63.5990(e) and (f).	No.
§ 63.8(e)	CMS Performance Evaluation.		No	No.
§ 63.8(f)(1)–(5)	Alternative Monitoring Method.	Procedures for Administrator to approve alternative monitoring.	Yes	Yes.
§ 63.8(f)(6)	Alternative to Relative Accuracy Test.		No	No.
§ 63.8(g)	Data Reduction		Applies as modified by § 63.5990(f).	No.
§ 63.9(a)	Notification Requirements.	Applicability and state delegation	Yes	Yes.
§ 63.9(b)(1)–(5)	Initial Notifications	Submit notification 120 days after effective date; notification of intent to construct/reconstruct, notification of commencement of construct/reconstruct, notification of startup; and contents of each.	Yes	Yes.
§ 63.9(c)	Request for Compliance Extension.	Can request if cannot comply by date or if installed best available control technology or lowest achievable emission rate.	Yes	Yes.
§ 63.9(d)	Notification of Special Compliance Requirements for New Source.	For sources that commence construction between proposal and promulgation and want to comply 3 years after effective date.	Yes	Yes.
§ 63.9(e)	Notification of Performance Test.	Notify Administrator 60 days prior	Yes	No.
§ 63.9(f)	Notification of VE/Opacity Test.	No	No.	
§ 63.9(g)	Additional Notifications When Using CMS.	No	No.	
§ 63.9(h)	Notification of Compliance Status.	Contents; due 60 days after end of performance test or other compliance demonstration, except for opacity/VE, which are due 30 days after; when to submit to Federal vs. State authority.	Yes	Yes.
§ 63.9(i)	Adjustment of Submittal Deadlines.	Procedures for Administrator to approve change in when notifications must be submitted.	Yes	Yes.
§ 63.9(j)	Change in Previous Information.	Must submit within 15 days after the change	Yes	Yes.
§ 63.10(a)	Recordkeeping/Reporting.	Applies to all, unless compliance extension; when to submit to Federal vs. State authority; procedures for owners of more than 1 source.	Yes	Yes.
§ 63.10(b)(1)	Recordkeeping/Reporting.	General Requirements; keep all records readily available; and keep for 5 years..	Yes	Yes.
§ 63.10(b)(2)(i)–(iv)	Records related to Startup, Shutdown, and Malfunction.	Yes	No.	
§ 63.10(b)(2)(vi) and (x)–(xi).	CMS Records	Malfunctions, inoperative, out-of-control; calibration checks; adjustments, maintenance.	Yes	No.
§ 63.10(b)(2)(vii)–(ix)	Records	Measurements to demonstrate compliance with emission limitations; -performance test, performance evaluation, and VE observation results; and measurements to determine conditions of performance tests and performance evaluations.	Yes	Yes.
§ 63.10(b)(2)(xii)	Records	Records when under waiver	Yes	Yes.
§ 63.10(b)(2)(xiii)	Records		No	No.
§ 63.10(b)(2)(xiv)	Records	All documentation supporting Initial Notification and Notification of Compliance Status.	Yes	Yes.
§ 63.10(b)(3)	Records	Applicability determinations	Yes	Yes.
§ 63.10(c)	Records		No	No.
§ 63.10(d)(1)	General Reporting Requirements.	Requirement to report	Yes	Yes.
§ 63.10(d)(2)	Report of Performance Test Results.	When to submit to Federal or State authority	Yes	No.

sfrattini on LAPJZKW1R2 with $$_JOB
VerDate Sep<11>2014 09:16 Apr 04, 2023 Jkt 256165 PO 00000 Frm 01319 Fmt 8010 Sfmt 8002 Q:\40\256165.XXX PC31

Citation	Subject	Brief description of applicable sections	Applicable to Subpart XXXX?	
			Using a control device	Not using a control device
§ 63.10(d)(3)	Reporting Opacity or VE Observations.		No	No.
§ 63.10(d)(4)	Progress Reports	Must submit progress reports on schedule if under compliance extension.	Yes	Yes.
§ 63.10(d)(5)	Startup, Shutdown, and Malfunction Reports.		Yes	No.
§ 63.10(e)	Additional CMS Reports.		No	No.
§ 63.10(f)	Waiver for Recordkeeping/Reporting.	Procedures for Administrator to waive	Yes	Yes.
§ 63.11	Flares		No	No.
§ 63.12	Delegation	State authority to enforce standards	Yes	Yes.
§ 63.13	Addresses	Addresses where reports, notifications, and requests are sent.	Yes	Yes.
§ 63.14	Incorporation by Reference.	Test methods incorporated by reference	Yes	Yes.
§ 63.15	Availability of Information.	Public and confidential information	Yes	Yes.

After January 20, 2021, as stated in § 63.6013, you must comply with the applicable General Provisions (GP) requirements according to the following table:

Citation	Subject	Brief description of applicable sections	Applicable to Subpart XXXX?	
			Using a control device	Not using a control device
§ 63.1	Applicability	Initial applicability determination; applicability after standard established; permit requirements; extensions; notifications.	Yes	Yes.
§ 63.2	Definitions	Definitions for part 63 standards	Yes	Yes.
§ 63.3	Units and Abbreviations.	Units and abbreviations for part 63 standards	Yes	Yes.
§ 63.4	Prohibited Activities	Prohibited activities; compliance date; circumvention; severability.	Yes	Yes.
§ 63.5	Construction/Reconstruction.	Applicability; applications; approvals	Yes	Yes.
§ 63.6(a)	Applicability	GP apply unless compliance extension; GP apply to area sources that become major.	Yes	Yes.
§ 63.6(b)(1)–(4)	Compliance Dates for New and Reconstructed Sources.	Standards apply at effective date; 3 years after effective date; upon startup; 10 years after construction or reconstruction commences for CAA section 112(f).	Yes	Yes.
§ 63.6(b)(5)	Notification	Must notify if commenced construction or reconstruction after proposal.	Yes	Yes.
§ 63.6(b)(6)	[Reserved].			
§ 63.6(b)(7)	Compliance Dates for New and Reconstructed Area Sources that Become Major.		No	No.
§ 63.6(c)(1)–(2)	Compliance Dates for Existing Sources.	Comply according to date in subpart, which must be no later than 3 years after effective date; for CAA section 112(f) standards, comply within 90 days of effective date unless compliance extension.	Yes	Yes.
§ 63.6(c)(3)–(4)	[Reserved].			
§ 63.6(c)(5)	Compliance Dates for Existing Area Sources that Become Major.	Area sources that become major must comply with major source standards by date indicated in subpart or by equivalent time period (for example, 3 years).	Yes	Yes.
§ 63.6(d)	[Reserved].			
§ 63.6(e)(1)(i)–(ii)	Operations and Maintenance.		No	No.

sfrattini on LAPJZKW1R2 with $$_JOB
VerDate Sep<11>2014 09:16 Apr 04, 2023 Jkt 256165 PO 00000 Frm 01320 Fmt 8010 Sfmt 8002 Q:\40\256165.XXX PC31

Citation	Subject	Brief description of applicable sections	Applicable to Subpart XXXX?	
			Using a control device	Not using a control device
§ 63.6(e)(1)(iii)–(2)	Operation and Maintenance.	Operate to minimize emissions at all times; correct malfunctions as soon as practicable; and operation and maintenance requirements independently enforceable; information Administrator will use to determine if operation and maintenance requirements were met.	Yes	Yes.
§ 63.6(e)(3)	Startup, Shutdown, and Malfunction Plan.		No	No.
§ 63.6(f)(1)	Startup, Shutdown, and Malfunction Exemption.		No. See § 63.5990(a).	No.
§ 63.6(f)(2)–(3)	Methods for Determining Compliance.	Compliance based on performance test; operation and maintenance plans; records; inspection.	Yes	Yes.
§ 63.6(g)(1)–(3)	Alternative Standard	Procedures for getting an alternative standard	Yes	Yes.
§ 63.6(h)	Opacity/Visible Emissions (VE) Standards.		No	No.
§ 63.6(i)	Compliance Extension	Procedures and criteria for Administrator to grant compliance extension.	Yes	Yes.
§ 63.6(j)	Presidential Compliance Exemption.	President may exempt source category from requirement to comply with rule.	Yes	Yes.
§ 63.7(a)(1)–(2)	Performance Test Dates.		No	No.
§ 63.7(a)(3)	CAA section 114 Authority.	Administrator may require a performance test under CAA section 114 at any time.	Yes	No.
§ 63.7(b)(1)	Notification of Performance Test.	Must notify Administrator 60 days before the test.	Yes	No.
§ 63.7(b)(2)	Notification of Rescheduling.	If rescheduling a performance test is necessary, must notify Administrator 5 days before scheduled date of rescheduled date.	Yes	No.
§ 63.7(c)	Quality Assurance/ Test Plan.	Requirement to submit site-specific test plan 60 days before the test or on date Administrator agrees with: test plan approval procedures; performance audit requirements; and internal and external quality assurance procedures for testing.	Yes	No.
§ 63.7(d)	Testing Facilities	Requirements for testing facilities	Yes	No.
§ 63.7(e)(1)	Conditions for Conducting Performance Tests.	Performance tests must be conducted under representative conditions; cannot conduct performance tests during startup, shutdown, and malfunction.	No	No.
§ 63.7(e)(2)	Conditions for Conducting Performance Tests.	Must conduct according to rule and the EPA test methods unless Administrator approves alternative.	Yes	No.
§ 63.7(e)(3)	Test Run Duration	Must have three test runs of at least 1 hour each; compliance is based on arithmetic mean of three runs; and conditions when data from an additional test run can be used.	Yes	No.
§ 63.7(f)	Alternative Test Method.	Procedures by which Administrator can grant approval to use an alternative test method.	Yes	No.
§ 63.7(g)	Performance Test Data Analysis.	Must include raw data in performance test report; must submit performance test data 60 days after end of test with the Notification of Compliance Status report; and keep data for 5 years.	Yes	No.
§ 63.7(h)	Waiver of Tests	Procedures for Administrator to waive performance test.	Yes	No.
§ 63.8(a)(1)	Applicability of Monitoring Requirements.	Subject to all monitoring requirements in standard.	Yes	Yes.
§ 63.8(a)(2)	Performance Specifications.	Performance Specifications in appendix B of 40 CFR part 60 apply.	Yes	No.
§ 63.8(a)(3)	[Reserved].			
§ 63.8(a)(4)	Monitoring with Flares		No	No.
§ 63.8(b)(1)	Monitoring	Must conduct monitoring according to standard unless Administrator approves alternative.	Yes	Yes.

sfrattini on LAPJZKW1R2 with $$_JOB
VerDate Sep<11>2014 09:16 Apr 04, 2023 Jkt 256165 PO 00000 Frm 01321 Fmt 8010 Sfmt 8002 Q:\40\256165.XXX PC31

Citation	Subject	Brief description of applicable sections	Applicable to Subpart XXXX?	
			Using a control device	Not using a control device
§ 63.8(b)(2)–(3)	Multiple Effluents and Multiple Monitoring Systems.	Specific requirements for installing monitoring systems; must install on each effluent before it is combined and before it is released to the atmosphere unless Administrator approves otherwise; if more than one monitoring system on an emission point, must report all monitoring system results, unless one monitoring system is a backup.	Yes	Yes.
§ 63.8(c)(1)	Monitoring System Operation and Maintenance.	Maintain monitoring system in a manner consistent with good air pollution control practices.	Applies as modified by § 63.5990(e) and (f).	No.
§ 63.8(c)(1)(i)	Routine and Predictable Startup, Shutdown, and Malfunction.		No	No.
§ 63.8(c)(1)(ii)	Startup, Shutdown, and Malfunction not in Startup, Shutdown, and Malfunction Plan.		No	No.
§ 63.8(c)(1)(iii)	Compliance with Operation and Maintenance Requirements.	How the Administrator determines if source complying with operation and maintenance requirements; review of source operation and maintenance procedures, records, manufacturer's instructions, recommendations, and inspection of monitoring system.	No	No.
§ 63.8(c)(2)–(3)	Monitoring System Installation.	Must install to get representative emission and parameter measurements; must verify operational status before or at performance test.	Yes	No.
§ 63.8(c)(4)	CMS Requirements		Applies as modified by § 63.5990(f).	No.
§ 63.8(c)(5)	Continuous Opacity Monitoring Systems Minimum Procedures.		No	No.
§ 63.8(c)(6)	CMS Requirements		Applies as modified by § 63.5990(e).	No.
§ 63.8(c)(7)–(8)	CMS Requirements	Out-of-control periods, including reporting	Yes	No.
§ 63.8(d)	CMS Quality Control		Applies as modified by § 63.5990(e) and (f).	No.
§ 63.8(d)(3)	Written Procedures for CMS.		No	No.
§ 63.8(e)	CMS Performance Evaluation.		No	No.
§ 63.8(f)(1)–(5)	Alternative Monitoring Method.	Procedures for Administrator to approve alternative monitoring.	Yes	Yes.
§ 63.8(f)(6)	Alternative to Relative Accuracy Test.		No	No.
§ 63.8(g)	Data Reduction		Applies as modified by § 63.5990(f).	No.
§ 63.9(a)	Notification Requirements.	Applicability and state delegation	Yes	Yes.
§ 63.9(b)(1)–(5)	Initial Notifications	Submit notification 120 days after effective date; notification of intent to construct/reconstruct, notification of commencement of construct/reconstruct, notification of startup; and contents of each.	Yes	Yes.
§ 63.9(c)	Request for Compliance Extension.	Can request if cannot comply by date or if installed best available control technology or lowest achievable emission rate.	Yes	Yes.
§ 63.9(d)	Notification of Special Compliance Requirements for New Source.	For sources that commence construction between proposal and promulgation and want to comply 3 years after effective date.	Yes	Yes.

sfrattini on LAPJZKW1R2 with $$_JOB
VerDate Sep<11>2014 09:16 Apr 04, 2023 Jkt 256165 PO 00000 Frm 01322 Fmt 8010 Sfmt 8002 Q:\40\256165.XXX PC31

Citation	Subject	Brief description of applicable sections	Applicable to Subpart XXXX?	
			Using a control device	Not using a control device
§ 63.9(e)	Notification of Performance Test.	Notify Administrator 60 days prior	Yes	No.
§ 63.9(f)	Notification of VE/Opacity Test.		No	No.
§ 63.9(g)	Additional Notifications When Using CMS.		No	No.
§ 63.9(h)	Notification of Compliance Status.	Contents; due 60 days after end of performance test or other compliance demonstration, except for opacity/VE, which are due 30 days after; when to submit to Federal vs. State authority.	Yes	Yes.
§ 63.9(i)	Adjustment of Submittal Deadlines.	Procedures for Administrator to approve change in when notifications must be submitted.	Yes	Yes.
§ 63.9(j)	Change in Previous Information.	Must submit within 15 days after the change	Yes	Yes.
§ 63.10(a)	Recordkeeping/Reporting.	Applies to all, unless compliance extension; when to submit to Federal vs. State authority; procedures for owners of more than 1 source.	Yes	Yes.
§ 63.10(b)(1)	Recordkeeping/Reporting.	General Requirements; keep all records readily available; and keep for 5 years.	Yes	Yes.
§ 63.10(b)(2)(i) and (iv–v).	Records related to Startup, Shutdown, and Malfunction.		No	No.
§ 63.10(b)(2)(ii)	Recordkeeping of failures to meet a standard.		No. *See* 63.6010 for recordkeeping of (1) date, time and duration; (2) listing of affected source or equipment, and an estimate of the quantity of each regulated pollutant emitted over the standard; and (3) actions to minimize emissions and correct the failure.	
§ 63.10(b)(2)(iii), (vi), and (x)–(xi).	CMS Records	Malfunctions, inoperative, out-of-control; calibration checks; adjustments, maintenance.	Yes	No.
§ 63.10(b)(2)(vii)–(ix)	Records	Measurements to demonstrate compliance with emission limitations; performance test, performance evaluation, and VE observation results; and measurements to determine conditions of performance tests and performance evaluations.	Yes	Yes.
§ 63.10(b)(2)(xii)	Records	Records when under waiver	Yes	Yes.
§ 63.10(b)(2)(xiii)	Records		No	No.
§ 63.10(b)(2)(xiv)	Records	All documentation supporting Initial Notification and Notification of Compliance Status.	Yes	Yes.
§ 63.10(b)(3)	Records	Applicability determinations	Yes	Yes.
§ 63.10(c)	Records		No	No.
§ 63.10(d)(1)	General Reporting Requirements.	Requirement to report	Yes	Yes.
§ 63.10(d)(2)	Report of Performance Test Results.	When to submit to Federal or State authority	Yes	No.
§ 63.10(d)(3)	Reporting Opacity or VE Observations.		No	No.

sfrattini on LAPJZKW1R2 with $$_JOB
VerDate Sep<11>2014 09:16 Apr 04, 2023 Jkt 256165 PO 00000 Frm 01323 Fmt 8010 Sfmt 8002 Q:\40\256165.XXX PC31

Citation	Subject	Brief description of applicable sections	Applicable to Subpart XXXX?	
			Using a control device	Not using a control device
§ 63.10(d)(4)	Progress Reports	Must submit progress reports on schedule if under compliance extension.	Yes	Yes.
§ 63.10(d)(5)	Startup, Shutdown, and Malfunction Reports.		No	No.
§ 63.10(e)	Additional CMS Reports.		No	No.
§ 63.10(f)	Waiver for Recordkeeping/Reporting.	Procedures for Administrator to waive	Yes	Yes.
§ 63.11	Flares		No	No.
§ 63.12	Delegation	State authority to enforce standards	Yes	Yes.
§ 63.13	Addresses	Addresses where reports, notifications, and requests are sent.	Yes	Yes.
§ 63.14	Incorporation by Reference.	Test methods incorporated by reference	Yes	Yes.
§ 63.15	Availability of Information.	Public and confidential information	Yes	Yes.

[85 FR 44765, July 24, 2020]

EDITORIAL NOTE: At 85 FR 73911, Nov. 19, 2020, table 17 to subpart XXXX of part 63 was amended by adding an entry for § 63.9(k); however, the amendment could not be incorporated because there are two tables within table 17, and the regulatory instruction did not indicate which table should receive the new entry.

Subpart YYYY—National Emission Standards for Hazardous Air Pollutants for Stationary Combustion Turbines

SOURCE: 69 FR 10537, Mar. 5, 2004, unless otherwise noted.

WHAT THIS SUBPART COVERS

§ 63.6080 What is the purpose of subpart YYYY?

Subpart YYYY establishes national emission limitations and operating limitations for hazardous air pollutants (HAP) emissions from stationary combustion turbines located at major sources of HAP emissions, and requirements to demonstrate initial and continuous compliance with the emission and operating limitations.

§ 63.6085 Am I subject to this subpart?

You are subject to this subpart if you own or operate a stationary combustion turbine located at a major source of HAP emissions.

(a) Stationary combustion turbine means all equipment, including but not limited to the turbine, the fuel, air, lubrication and exhaust gas systems, control systems (except emissions control equipment), and any ancillary components and sub-components comprising any simple cycle stationary combustion turbine, any regenerative/recuperative cycle stationary combustion turbine, the combustion turbine portion of any stationary cogeneration cycle combustion system, or the combustion turbine portion of any stationary combined cycle steam/electric generating system. Stationary means that the combustion turbine is not self propelled or intended to be propelled while performing its function, although it may be mounted on a vehicle for portability or transportability. Stationary combustion turbines covered by this subpart include simple cycle stationary combustion turbines, regenerative/recuperative cycle stationary combustion turbines, cogeneration cycle stationary combustion turbines, and combined cycle stationary combustion turbines. Stationary combustion turbines subject to this subpart do not include turbines located at a research or laboratory facility, if research is conducted on the turbine itself and the turbine is not being used to power other applications at the research or laboratory facility.

(b) A major source of HAP emissions is a contiguous site under common control that emits or has the potential to emit any single HAP at a rate of 10

sfrattini on LAPJZKW1R2 with $$_JOB
VerDate Sep<11>2014 09:16 Apr 04, 2023 Jkt 256165 PO 00000 Frm 01324 Fmt 8010 Sfmt 8010 Q:\40\256165.XXX PC31

tons (9.07 megagrams) or more per year or any combination of HAP at a rate of 25 tons (22.68 megagrams) or more per year, except that for oil and gas production facilities, a major source of HAP emissions is determined for each surface site.

§ 63.6090 What parts of my plant does this subpart cover?

This subpart applies to each affected source.

(a) *Affected source.* An affected source is any existing, new, or reconstructed stationary combustion turbine located at a major source of HAP emissions.

(1) *Existing stationary combustion turbine.* A stationary combustion turbine is existing if you commenced construction or reconstruction of the stationary combustion turbine on or before January 14, 2003. A change in ownership of an existing stationary combustion turbine does not make that stationary combustion turbine a new or reconstructed stationary combustion turbine.

(2) *New stationary combustion turbine.* A stationary combustion turbine is new if you commenced construction of the stationary combustion turbine after January 14, 2003.

(3) *Reconstructed stationary combustion turbine.* A stationary combustion turbine is reconstructed if you meet the definition of reconstruction in § 63.2 of subpart A of this part and reconstruction is commenced after January 14, 2003.

(b) *Subcategories with limited requirements.* (1) A new or reconstructed stationary combustion turbine located at a major source which meets either of the following criteria does not have to meet the requirements of this subpart and of subpart A of this part except for the initial notification requirements of § 63.6145(d):

(i) The stationary combustion turbine is an emergency stationary combustion turbine; or

(ii) The stationary combustion turbine is located on the North Slope of Alaska.

(2) A stationary combustion turbine which burns landfill gas or digester gas equivalent to 10 percent or more of the gross heat input on an annual basis, or a stationary combustion turbine where gasified municipal solid waste (MSW) is used to generate 10 percent or more of the gross heat input on an annual basis does not have to meet the requirements of this subpart except for:

(i) The initial notification requirements of § 63.6145(d); and

(ii) Additional monitoring and reporting requirements as provided in §§ 63.6125(c) and 63.6150.

(3) An existing, new, or reconstructed stationary combustion turbine with a rated peak power output of less than 1.0 megawatt (MW) at International Organization for Standardization (ISO) standard day conditions, which is located at a major source, does not have to meet the requirements of this subpart and of subpart A of this part. This determination applies to the capacities of individual combustion turbines, whether or not an aggregated group of combustion turbines has a common add-on air pollution control device. No initial notification is necessary, even if the unit appears to be subject to other requirements for initial notification. For example, a 0.75 MW emergency turbine would not have to submit an initial notification.

(4) Existing stationary combustion turbines in all subcategories do not have to meet the requirements of this subpart and of subpart A of this part. No initial notification is necessary for any existing stationary combustion turbine, even if a new or reconstructed turbine in the same category would require an initial notification.

(5) Combustion turbine engine test cells/stands do not have to meet the requirements of this subpart but may have to meet the requirements of subpart A of this part if subject to another subpart. No initial notification is necessary, even if the unit appears to be subject to other requirements for initial notification.

§ 63.6092 Are duct burners and waste heat recovery units covered by subpart YYYY?

No, duct burners and waste heat recovery units are considered steam generating units and are not covered under this subpart. In some cases, it may be difficult to separately monitor emissions from the turbine and duct burner,

sfrattini on LAPJZKW1R2 with $$_JOB
VerDate Sep<11>2014 09:16 Apr 04, 2023 Jkt 256165 PO 00000 Frm 01325 Fmt 8010 Sfmt 8010 Q:\40\256165.XXX PC31

so sources are allowed to meet the required emission limitations with their duct burners in operation.

§ 63.6095 When do I have to comply with this subpart?

(a) *Affected sources.* (1) If you start up a new or reconstructed stationary combustion turbine which is a lean premix oil-fired stationary combustion turbine or a diffusion flame oil-fired stationary combustion turbine as defined by this subpart on or before March 5, 2004, you must comply with the emissions limitations and operating limitations in this subpart no later than March 5, 2004.

(2) If you start up a new or reconstructed stationary combustion turbine which is a lean premix oil-fired stationary combustion turbine or a diffusion flame oil-fired stationary combustion turbine as defined by this subpart after March 5, 2004, you must comply with the emissions limitations and operating limitations in this subpart upon startup of your affected source.

(3) If you start up a new or reconstructed stationary combustion turbine which is a lean premix gas-fired stationary combustion turbine or a diffusion flame gas-fired stationary combustion turbine as defined by this subpart on or before March 9, 2022, you must comply with the emissions limitations and operating limitations in this subpart no later than March 9, 2022.

(4) If you start up a new or reconstructed stationary combustion turbine which is a lean premix gas-fired stationary combustion turbine or a diffusion flame gas-fired stationary combustion turbine as defined by this subpart after March 9, 2022, you must comply with the emissions limitations and operating limitations in this subpart upon startup of your affected source.

(b) *Area sources that become major sources.* If your new or reconstructed stationary combustion turbine is an area source that increases its emissions or its potential to emit such that it becomes a major source of HAP, it must be in compliance with any applicable requirements of this subpart when it becomes a major source.

(c) You must meet the notification requirements in § 63.6145 according to the schedule in § 63.6145 and in 40 CFR part 63, subpart A.

[69 FR 10537, Mar. 5, 2004, as amended at 69 FR 51188, Aug. 18, 2004; 87 FR 13192, Mar. 9, 2022]

EMISSION AND OPERATING LIMITATIONS

§ 63.6100 What emission and operating limitations must I meet?

For each new or reconstructed stationary combustion turbine which is a lean premix gas-fired stationary combustion turbine, a lean premix oil-fired stationary combustion turbine, a diffusion flame gas-fired stationary combustion turbine, or a diffusion flame oil-fired stationary combustion turbine as defined by this subpart, you must comply with the emission limitations and operating limitations in Table 1 and Table 2 of this subpart.

GENERAL COMPLIANCE REQUIREMENTS

§ 63.6105 What are my general requirements for complying with this subpart?

(a) Before September 8, 2020, you must be in compliance with the emission limitations and operating limitations which apply to you at all times except during startup, shutdown, and malfunctions. After September 8, 2020, you must be in compliance with the emission limitations, operating limitations, and other requirements in this subpart which apply to you at all times.

(b) Before September 8, 2020, if you must comply with emission and operating limitations, you must operate and maintain your stationary combustion turbine, oxidation catalyst emission control device or other air pollution control equipment, and monitoring equipment in a manner consistent with good air pollution control practices for minimizing emissions at all times including during startup, shutdown, and malfunction.

(c) After September 8, 2020, at all times, the owner or operator must operate and maintain any affected source, including associated air pollution control equipment and monitoring equipment, in a manner consistent with safety and good air pollution control practices for minimizing emissions. The general duty to minimize

sfrattini on LAPJZKW1R2 with $$_JOB
VerDate Sep<11>2014 09:16 Apr 04, 2023 Jkt 256165 PO 00000 Frm 01326 Fmt 8010 Sfmt 8010 Q:\40\256165.XXX PC31

emissions does not require the owner or operator to make any further efforts to reduce emissions if levels required by the applicable standard have been achieved. Determination of whether a source is operating in compliance with operation and maintenance requirements will be based on information available to the Administrator which may include, but is not limited to, monitoring results, review of operation and maintenance procedures, review of operation and maintenance records, and inspection of the source.

[85 FR 13539, Mar. 9, 2020]

TESTING AND INITIAL COMPLIANCE REQUIREMENTS

§63.6110 By what date must I conduct the initial performance tests or other initial compliance demonstrations?

(a) You must conduct the initial performance tests or other initial compliance demonstrations in Table 4 of this subpart that apply to you within 180 calendar days after the compliance date that is specified for your stationary combustion turbine in §63.6095 and according to the provisions in §63.7(a)(2).

(b) An owner or operator is not required to conduct an initial performance test to determine outlet formaldehyde concentration on units for which a performance test has been previously conducted, but the test must meet all of the conditions described in paragraphs (b)(1) through (b)(5) of this section.

(1) The test must have been conducted using the same methods specified in this subpart, and these methods must have been followed correctly.

(2) The test must not be older than 2 years.

(3) The test must be reviewed and accepted by the Administrator.

(4) Either no process or equipment changes must have been made since the test was performed, or the owner or operator must be able to demonstrate that the results of the performance test, with or without adjustments, reliably demonstrate compliance despite process or equipment changes.

(5) The test must be conducted at any load condition within plus or minus 10 percent of 100 percent load.

§63.6115 When must I conduct subsequent performance tests?

Subsequent performance tests must be performed on an annual basis as specified in Table 3 of this subpart.

§63.6120 What performance tests and other procedures must I use?

(a) You must conduct each performance test in Table 3 of this subpart that applies to you.

(b) Each performance test must be conducted according to the requirements in Table 3 of this subpart. Before September 8, 2020, each performance test must be conducted according to the requirements of the General Provisions at §63.7(e)(1).

(c) Performance tests must be conducted at high load, defined as 100 percent plus or minus 10 percent. Before September 8, 2020, do not conduct performance tests or compliance evaluations during periods of startup, shutdown, or malfunction. After September 8, 2020, performance tests shall be conducted under such conditions based on representative performance of the affected source for the period being tested. Representative conditions exclude periods of startup and shutdown. The owner or operator may not conduct performance tests during periods of malfunction. The owner or operator must record the process information that is necessary to document operating conditions during the test and include in such record an explanation to support that such conditions represent normal operation. Upon request, the owner or operator shall make available to the Administrator such records as may be necessary to determine the conditions of performance tests.

(d) You must conduct three separate test runs for each performance test, and each test run must last at least 1 hour.

(e) If your stationary combustion turbine is not equipped with an oxidation catalyst, you must petition the Administrator for operating limitations that you will monitor to demonstrate compliance with the formaldehyde emission limitation in Table

sfrattini on LAPJZKW1R2 with $$_JOB
VerDate Sep<11>2014 09:16 Apr 04, 2023 Jkt 256165 PO 00000 Frm 01327 Fmt 8010 Sfmt 8010 Q:\40\256165.XXX PC31

1. You must measure these operating parameters during the initial performance test and continuously monitor thereafter. Alternatively, you may petition the Administrator for approval of no additional operating limitations. If you submit a petition under this section, you must not conduct the initial performance test until after the petition has been approved or disapproved by the Administrator.

(f) If your stationary combustion turbine is not equipped with an oxidation catalyst and you petition the Administrator for approval of additional operating limitations to demonstrate compliance with the formaldehyde emission limitation in Table 1, your petition must include the following information described in paragraphs (f)(1) through (5) of this section.

(1) Identification of the specific parameters you propose to use as additional operating limitations;

(2) A discussion of the relationship between these parameters and HAP emissions, identifying how HAP emissions change with changes in these parameters and how limitations on these parameters will serve to limit HAP emissions;

(3) A discussion of how you will establish the upper and/or lower values for these parameters which will establish the limits on these parameters in the operating limitations;

(4) A discussion identifying the methods you will use to measure and the instruments you will use to monitor these parameters, as well as the relative accuracy and precision of these methods and instruments; and

(5) A discussion identifying the frequency and methods for recalibrating the instruments you will use for monitoring these parameters.

(g) If you petition the Administrator for approval of no additional operating limitations, your petition must include the information described in paragraphs (g)(1) through (7) of this section.

(1) Identification of the parameters associated with operation of the stationary combustion turbine and any emission control device which could change intentionally (*e.g.*, operator adjustment, automatic controller adjustment, etc.) or unintentionally (*e.g.*, wear and tear, error, etc.) on a routine basis or over time;

(2) A discussion of the relationship, if any, between changes in the parameters and changes in HAP emissions;

(3) For the parameters which could change in such a way as to increase HAP emissions, a discussion of why establishing limitations on the parameters is not possible;

(4) For the parameters which could change in such a way as to increase HAP emissions, a discussion of why you could not establish upper and/or lower values for the parameters which would establish limits on the parameters as operating limitations;

(5) For the parameters which could change in such a way as to increase HAP emissions, a discussion identifying the methods you could use to measure them and the instruments you could use to monitor them, as well as the relative accuracy and precision of the methods and instruments;

(6) For the parameters, a discussion identifying the frequency and methods for recalibrating the instruments you could use to monitor them; and

(7) A discussion of why, from your point of view, it is infeasible, unreasonable or unnecessary to adopt the parameters as operating limitations.

[69 FR 10537, Mar. 5, 2004, as amended at 85 FR 13539, Mar. 9, 2020]

§ 63.6125 What are my monitor installation, operation, and maintenance requirements?

(a) If you are operating a stationary combustion turbine that is required to comply with the formaldehyde emission limitation and you use an oxidation catalyst emission control device, you must monitor on a continuous basis your catalyst inlet temperature in order to comply with the operating limitations in Table 2 and as specified in Table 5 of this subpart.

(b) If you are operating a stationary combustion turbine that is required to comply with the formaldehyde emission limitation and you are not using an oxidation catalyst, you must continuously monitor any parameters specified in your approved petition to the Administrator, in order to comply with the operating limitations in Table

sfrattini on LAPJZKW1R2 with $$_JOB
VerDate Sep<11>2014 09:16 Apr 04, 2023 Jkt 256165 PO 00000 Frm 01328 Fmt 8010 Sfmt 8010 Q:\40\256165.XXX PC31

2 and as specified in Table 5 of this subpart.

(c) If you are operating a stationary combustion turbine which fires landfill gas or digester gas equivalent to 10 percent or more of the gross heat input on an annual basis, or a stationary combustion turbine where gasified MSW is used to generate 10 percent or more of the gross heat input on an annual basis, you must monitor and record your fuel usage daily with separate fuel meters to measure the volumetric flow rate of each fuel. In addition, you must operate your turbine in a manner which minimizes HAP emissions.

(d) If you are operating a lean premix gas-fired stationary combustion turbine or a diffusion flame gas-fired stationary combustion turbine as defined by this subpart, and you use any quantity of distillate oil to fire any new or existing stationary combustion turbine which is located at the same major source, you must monitor and record your distillate oil usage daily for all new and existing stationary combustion turbines located at the major source with a non-resettable hour meter to measure the number of hours that distillate oil is fired.

(e) After September 8, 2020, if you are required to use a continuous monitoring system (CMS), you must develop and implement a CMS quality control program that included written procedures for CMS according to § 63.8(d)(1) through (2). You must keep these written procedures on record for the life of the affected source or until the affected source is no longer subject to the provisions of this part, to be made available for inspection, upon request, by the Administrator. If the performance evaluation plan is revised, the owner or operator shall keep previous (*i.e.*, superseded) versions of the performance evaluation plan on record to be made available for inspection, upon request, by the Administrator, for a period of 5 years after each revision to the plan. The program of corrective action should be included in the plan required under § 63.8(d)(2).

[69 FR 10537, Mar. 5, 2004, as amended at 85 FR 13539, Mar. 9, 2020]

§ 63.6130 How do I demonstrate initial compliance with the emission and operating limitations?

(a) You must demonstrate initial compliance with each emission and operating limitation that applies to you according to Table 4 of this subpart.

(b) You must submit the Notification of Compliance Status containing results of the initial compliance demonstration according to the requirements in § 63.6145(f).

CONTINUOUS COMPLIANCE REQUIREMENTS

§ 63.6135 How do I monitor and collect data to demonstrate continuous compliance?

(a) Except for monitor malfunctions, associated repairs, and required quality assurance or quality control activities (including, as applicable, calibration checks and required zero and span adjustments of the monitoring system), you must conduct all parametric monitoring at all times the stationary combustion turbine is operating.

(b) Do not use data recorded during monitor malfunctions, associated repairs, and required quality assurance or quality control activities for meeting the requirements of this subpart, including data averages and calculations. You must use all the data collected during all other periods in assessing the performance of the control device or in assessing emissions from the new or reconstructed stationary combustion turbine.

§ 63.6140 How do I demonstrate continuous compliance with the emission and operating limitations?

(a) You must demonstrate continuous compliance with each emission limitation and operating limitation in Table 1 and Table 2 of this subpart according to methods specified in Table 5 of this subpart.

(b) You must report each instance in which you did not meet each emission imitation or operating limitation. You must also report each instance in which you did not meet the requirements in Table 7 of this subpart that apply to you. These instances are deviations from the emission and operating

sfrattini on LAPJZKW1R2 with $$_JOB
VerDate Sep<11>2014 09:16 Apr 04, 2023 Jkt 256165 PO 00000 Frm 01329 Fmt 8010 Sfmt 8010 Q:\40\256165.XXX PC31

limitations in this subpart. These deviations must be reported according to the requirements in § 63.6150.

(c) Before September 8, 2020, consistent with §§ 63.6(e) and 63.7(e)(1), deviations that occur during a period of startup, shutdown, and malfunction are not violations if you have operated your stationary combustion turbine in accordance with § 63.6(e)(1)(i).

[69 FR 10537, Mar. 5, 2004, as amended at 71 FR 20467, Apr. 20, 2006; 85 FR 13539, Mar. 9, 2020]

NOTIFICATIONS, REPORTS, AND RECORDS

§ 63.6145 What notifications must I submit and when?

(a) You must submit all of the notifications in §§ 63.7(b) and (c), 63.8(e), 63.8(f)(4), and 63.9(b) and (h) that apply to you by the dates specified.

(b) As specified in § 63.9(b)(2), if you start up your new or reconstructed stationary combustion turbine before March 5, 2004, you must submit an Initial Notification not later than 120 calendar days after March 5, 2004, or no later than 120 days after the source becomes subject to this subpart, whichever is later.

(c) As specified in § 63.9(b), if you start up your new or reconstructed stationary combustion turbine on or after March 5, 2004, you must submit an Initial Notification not later than 120 calendar days after you become subject to this subpart.

(d) If you are required to submit an Initial Notification but are otherwise not affected by the emission limitation requirements of this subpart, in accordance with § 63.6090(b), your notification must include the information in § 63.9(b)(2)(i) through (v) and a statement that your new or reconstructed stationary combustion turbine has no additional emission limitation requirements and must explain the basis of the exclusion (for example, that it operates exclusively as an emergency stationary combustion turbine).

(e) If you are required to conduct an initial performance test, you must submit a notification of intent to conduct an initial performance test at least 60 calendar days before the initial performance test is scheduled to begin as required in § 63.7(b)(1).

(f) If you are required to comply with the emission limitation for formaldehyde, you must submit a Notification of Compliance Status according to § 63.9(h)(2)(ii). For each performance test required to demonstrate compliance with the emission limitation for formaldehyde, you must submit the Notification of Compliance Status, including the performance test results, before the close of business on the 60th calendar day following the completion of the performance test.

[69 FR 10537, Mar, 5, 2004, as amended at 85 FR 73911, Nov. 19, 2020]

§ 63.6150 What reports must I submit and when?

(a) *Compliance report.* Anyone who owns or operates a stationary combustion turbine which must meet the emission limitation for formaldehyde must submit a semiannual compliance report according to Table 6 of this subpart. The semiannual compliance report must contain the information described in paragraphs (a)(1) through (5) of this section. The semiannual compliance report, including the excess emissions and monitoring system performance reports of § 63.10(e)(3), must be submitted by the dates specified in paragraphs (b)(1) through (5) of this section, unless the Administrator has approved a different schedule. After September 8, 2020, or once the reporting template has been available on the Compliance and Emissions Data Reporting Interface (CEDRI) website for 180 days, whichever date is later, you must submit all subsequent reports to the EPA following the procedure specified in paragraph (g) of this section.

(1) Company name and address.

(2) Statement by a responsible official, with that official's name, title, and signature, certifying the accuracy of the content of the report.

(3) Date of report and beginning and ending dates of the reporting period.

(4) Before September 8, 2020, for each deviation from an emission limitation, the compliance report must contain the information in paragraphs (a)(4)(i) through (iii) of this section.

(i) The total operating time of each stationary combustion turbine during the reporting period.

sfrattini on LAPJZKW1R2 with $$_JOB
VerDate Sep<11>2014 09:16 Apr 04, 2023 Jkt 256165 PO 00000 Frm 01330 Fmt 8010 Sfmt 8010 Q:\40\256165.XXX PC31

(ii) Information on the number, duration, and cause of deviations (including unknown cause, if applicable), as applicable, and the corrective action taken.

(iii) Information on the number, duration, and cause for monitor downtime incidents (including unknown cause, if applicable, other than downtime associated with zero and span and other daily calibration checks).

(5) After September 8, 2020, report each deviation in the semiannual compliance report. Report the information specified in paragraphs (a)(5)(i) through (iv) of this section.

(i) Report the number of deviations. For each instance, report the start date, start time, duration, and cause of each deviation, and the corrective action taken.

(ii) For each deviation, the report must include a list of the affected sources or equipment, an estimate of the quantity of each regulated pollutant emitted over any emission limit, a description of the method used to estimate the emissions.

(iii) Information on the number, duration, and cause for monitor downtime incidents (including unknown cause, if applicable, other than downtime associated with zero and span and other daily calibration checks), as applicable, and the corrective action taken.

(iv) Report the total operating time of the affected source during the reporting period.

(b) Dates of submittal for the semiannual compliance report are provided in (b)(1) through (b)(5) of this section.

(1) The first semiannual compliance report must cover the period beginning on the compliance date specified in §63.6095 and ending on June 30 or December 31, whichever date is the first date following the end of the first calendar half after the compliance date specified in §63.6095.

(2) The first semiannual compliance report must be postmarked or delivered no later than July 31 or January 31, whichever date follows the end of the first calendar half after the compliance date that is specified in §63.6095.

(3) Each subsequent semiannual compliance report must cover the semiannual reporting period from January 1 through June 30 or the semiannual reporting period from July 1 through December 31.

(4) Each subsequent semiannual compliance report must be postmarked or delivered no later than July 31 or January 31, whichever date is the first date following the end of the semiannual reporting period.

(5) For each stationary combustion turbine that is subject to permitting regulations pursuant to 40 CFR part 70 or 71, and if the permitting authority has established the date for submitting annual reports pursuant to 40 CFR 70.6(a)(3)(iii)(A) or 40 CFR 71.6(a)(3)(iii)(A), you may submit the first and subsequent compliance reports according to the dates the permitting authority has established instead of according to the dates in paragraphs (b)(1) through (4) of this section.

(c) If you are operating as a stationary combustion turbine which fires landfill gas or digester gas equivalent to 10 percent or more of the gross heat input on an annual basis, or a stationary combustion turbine where gasified MSW is used to generate 10 percent or more of the gross heat input on an annual basis, you must submit an annual report according to Table 6 of this subpart by the date specified unless the Administrator has approved a different schedule, according to the information described in paragraphs (d)(1) through (5) of this section. You must report the data specified in (c)(1) through (3) of this section. After September 8, 2020, you must submit all subsequent reports to the EPA following the procedure specified in paragraph (g) of this section.

(1) Fuel flow rate of each fuel and the heating values that were used in your calculations. You must also demonstrate that the percentage of heat input provided by landfill gas, digester gas, or gasified MSW is equivalent to 10 percent or more of the total fuel consumption on an annual basis.

(2) The operating limits provided in your federally enforceable permit, and any deviations from these limits.

(3) Any problems or errors suspected with the meters.

(d) Dates of submittal for the annual report are provided in (d)(1) through (d)(5) of this section.

sfrattini on LAPJZKW1R2 with $$_JOB
VerDate Sep<11>2014 09:16 Apr 04, 2023 Jkt 256165 PO 00000 Frm 01331 Fmt 8010 Sfmt 8010 Q:\40\256165.XXX PC31

(1) The first annual report must cover the period beginning on the compliance date specified in § 63.6095 and ending on December 31.

(2) The first annual report must be postmarked or delivered no later than January 31.

(3) Each subsequent annual report must cover the annual reporting period from January 1 through December 31.

(4) Each subsequent annual report must be postmarked or delivered no later than January 31.

(5) For each stationary combustion turbine that is subject to permitting regulations pursuant to 40 CFR part 70 or 71, and if the permitting authority has established the date for submitting annual reports pursuant to 40 CFR 70.6(a)(3)(iii)(A) or 40 CFR 71.6(a)(3)(iii)(A), you may submit the first and subsequent compliance reports according to the dates the permitting authority has established instead of according to the dates in paragraphs (d)(1) through (4) of this section.

(e) If you are operating a lean premix gas-fired stationary combustion turbine or a diffusion flame gas-fired stationary combustion turbine as defined by this subpart, and you use any quantity of distillate oil to fire any new or existing stationary combustion turbine which is located at the same major source, you must submit an annual report according to Table 6 of this subpart by the date specified unless the Administrator has approved a different schedule, according to the information described in paragraphs (d)(1) through (5) of this section. You must report the data specified in (e)(1) through (3) of this section. After September 8, 2020, you must submit all subsequent reports to the EPA following the procedure specified in paragraph (g) of this section.

(1) The number of hours distillate oil was fired by each new or existing stationary combustion turbine during the reporting period.

(2) The operating limits provided in your federally enforceable permit, and any deviations from these limits.

(3) Any problems or errors suspected with the meters.

(f) *Performance test report.* After September 8, 2020, within 60 days after the date of completing each performance test required by this subpart, you must submit the results of the performance test (as specified in § 63.6145(f)) following the procedures specified in paragraphs (f)(1) through (3) of this section.

(1) *Data collected using test methods supported by the EPA's Electronic Reporting Tool (ERT) as listed on the EPA's ERT website (https://www.epa.gov/electronic-reporting-air-emissions/electronic-reporting-tool-ert) at the time of the test.* Submit the results of the performance test to the EPA via the CEDRI, which can be accessed through the EPA's Central Data Exchange (CDX) (*https://cdx.epa.gov/*). The data must be submitted in a file format generated through the use of the EPA's ERT. Alternatively, you may submit an electronic file consistent with the extensible markup language (XML) schema listed on the EPA's ERT website.

(2) *Data collected using test methods that are not supported by the EPA's ERT as listed on the EPA's ERT website at the time of the test.* The results of the performance test must be included as an attachment in the ERT or an alternate electronic file consistent with the XML schema listed on the EPA's ERT website. Submit the ERT generated package or alternative file to the EPA via CEDRI.

(3) *Confidential business information (CBI).* If you claim some of the information submitted under paragraph (f)(1) of this section is CBI, you must submit a complete file, including information claimed to be CBI, to the EPA. The file must be generated through the use of the EPA's ERT or an alternate electronic file consistent with the XML schema listed on the EPA's ERT website. Submit the file on a compact disc, flash drive, or other commonly used electronic storage medium and clearly mark the medium as CBI. Mail the electronic medium to U.S. EPA/OAQPS/CORE CBI Office, Attention: Group Leader, Measurement Policy Group, MD C404–02, 4930 Old Page Rd., Durham, NC 27703. The same file with the CBI omitted must be submitted to the EPA via the EPA's CDX as described in paragraph (f)(1) of this section.

(g) If you are required to submit reports following the procedure specified

sfrattini on LAPJZKW1R2 with $$_JOB
VerDate Sep<11>2014 09:16 Apr 04, 2023 Jkt 256165 PO 00000 Frm 01332 Fmt 8010 Sfmt 8010 Q:\40\256165.XXX PC31

in this paragraph, you must submit reports to the EPA via CEDRI, which can be accessed through the EPA's CDX (*https://cdx.epa.gov/*). You must use the appropriate electronic report template on the CEDRI website (*https://www.epa.gov/electronic-reporting-air-emissions/compliance-and-emissions-data-reporting-interface-cedri*) for this subpart. The date report templates become available will be listed on the CEDRI website. The report must be submitted by the deadline specified in this subpart, regardless of the method in which the report is submitted. If you claim some of the information required to be submitted via CEDRI is CBI, submit a complete report, including information claimed to be CBI, to the EPA. The report must be generated using the appropriate form on the CEDRI website. Submit the file on a compact disc, flash drive, or other commonly used electronic storage medium and clearly mark the medium as CBI. Mail the electronic medium to U.S. EPA/OAQPS/CORE CBI Office, Attention: Group Leader, Measurement Policy Group, MD C404–02, 4930 Old Page Rd., Durham, NC 27703. The same file with the CBI omitted must be submitted to the EPA via the EPA's CDX as described earlier in this paragraph.

(h) If you are required to electronically submit a report through CEDRI in the EPA's CDX, you may assert a claim of EPA system outage for failure to timely comply with the reporting requirement. To assert a claim of EPA system outage, you must meet the requirements outlined in paragraphs (h)(1) through (7) of this section.

(1) You must have been or will be precluded from accessing CEDRI and submitting a required report within the time prescribed due to an outage of either the EPA's CEDRI or CDX systems.

(2) The outage must have occurred within the period of time beginning five business days prior to the date that the submission is due.

(3) The outage may be planned or unplanned.

(4) You must submit notification to the Administrator in writing as soon as possible following the date you first knew, or through due diligence should have known, that the event may cause or has caused a delay in reporting.

(5) You must provide to the Administrator a written description identifying:

(i) The date(s) and time(s) when CDX or CEDRI was accessed and the system was unavailable;

(ii) A rationale for attributing the delay in reporting beyond the regulatory deadline to EPA system outage;

(iii) Measures taken or to be taken to minimize the delay in reporting; and

(iv) The date by which you propose to report, or if you have already met the reporting requirement at the time of the notification, the date you reported.

(6) The decision to accept the claim of EPA system outage and allow an extension to the reporting deadline is solely within the discretion of the Administrator.

(7) In any circumstance, the report must be submitted electronically as soon as possible after the outage is resolved.

(i) If you are required to electronically submit a report through CEDRI in the EPA's CDX, you may assert a claim of force majeure for failure to timely comply with the reporting requirement. To assert a claim of force majeure, you must meet the requirements outlined in paragraphs (i)(1) through (5) of this section.

(1) You may submit a claim if a force majeure event is about to occur, occurs, or has occurred or there are lingering effects from such an event within the period of time beginning five business days prior to the date the submission is due. For the purposes of this section, a force majeure event is defined as an event that will be or has been caused by circumstances beyond the control of the affected facility, its contractors, or any entity controlled by the affected facility that prevents you from complying with the requirement to submit a report electronically within the time period prescribed. Examples of such events are acts of nature (*e.g.*, hurricanes, earthquakes, or floods), acts of war or terrorism, or equipment failure or safety hazard beyond the control of the affected facility (*e.g.*, large scale power outage).

(2) You must submit notification to the Administrator in writing as soon as possible following the date you first knew, or through due diligence should

sfrattini on LAPJZKW1R2 with $$_JOB
VerDate Sep<11>2014 09:16 Apr 04, 2023 Jkt 256165 PO 00000 Frm 01333 Fmt 8010 Sfmt 8010 Q:\40\256165.XXX PC31

have known, that the event may cause or has caused a delay in reporting.

(3) You must provide to the Administrator:

(i) A written description of the force majeure event;

(ii) A rationale for attributing the delay in reporting beyond the regulatory deadline to the force majeure event;

(iii) Measures taken or to be taken to minimize the delay in reporting; and

(iv) The date by which you propose to report, or if you have already met the reporting requirement at the time of the notification, the date you reported.

(4) The decision to accept the claim of force majeure and allow an extension to the reporting deadline is solely within the discretion of the Administrator.

(5) In any circumstance, the reporting must occur as soon as possible after the force majeure event occurs.

[69 FR 10537, Mar. 5, 2004, as amended at 85 FR 13539, Mar. 9, 2020]

§ 63.6155 What records must I keep?

(a) You must keep the records as described in paragraphs (a)(1) through (7) of this section.

(1) A copy of each notification and report that you submitted to comply with this subpart, including all documentation supporting any Initial Notification or Notification of Compliance Status that you submitted, according to the requirements in § 63.10(b)(2)(xiv).

(2) Records of performance tests and performance evaluations as required in § 63.10(b)(2)(viii).

(3) Before September 8, 2020, records of the occurrence and duration of each startup, shutdown, or malfunction as required in § 63.10(b)(2)(i).

(4) Before September 8, 2020, records of the occurrence and duration of each malfunction of the air pollution control equipment, if applicable, as required in § 63.10(b)(2)(ii).

(5) Records of all maintenance on the air pollution control equipment as required in § 63.10(b)(2)(iii).

(6) After September 8, 2020, records of the date, time, and duration of each startup period, recording the periods when the affected source was subject to the standard applicable to startup.

(7) After September 8, 2020, keep records as follows.

(i) Record the number of deviations. For each deviation, record the date, time, cause, and duration of the deviation.

(ii) For each deviation, record and retain a list of the affected sources or equipment, an estimate of the quantity of each regulated pollutant emitted over any emission limit and a description of the method used to estimate the emissions.

(iii) Record actions taken to minimize emissions in accordance with § 63.6105(c), and any corrective actions taken to return the affected unit to its normal or usual manner of operation.

(b) If you are operating a stationary combustion turbine which fires landfill gas, digester gas or gasified MSW equivalent to 10 percent or more of the gross heat input on an annual basis, or if you are operating a lean premix gas-fired stationary combustion turbine or a diffusion flame gas-fired stationary combustion turbine as defined by this subpart, and you use any quantity of distillate oil to fire any new or existing stationary combustion turbine which is located at the same major source, you must keep the records of your daily fuel usage monitors.

(c) You must keep the records required in Table 5 of this subpart to show continuous compliance with each operating limitation that applies to you.

(d) Any records required to be maintained by this part that are submitted electronically via the EPA's CEDRI may be maintained in electronic format. This ability to maintain electronic copies does not affect the requirement for facilities to make records, data, and reports available upon request to a delegated air agency or the EPA as part of an on-site compliance evaluation.

[69 FR 10537, Mar. 5, 2004, as amended at 85 FR 13541, Mar. 9, 2020]

§ 63.6160 In what form and how long must I keep my records?

(a) You must maintain all applicable records in such a manner that they can be readily accessed and are suitable for inspection according to § 63.10(b)(1).

sfrattini on LAPJZKW1R2 with $$_JOB
VerDate Sep<11>2014 09:16 Apr 04, 2023 Jkt 256165 PO 00000 Frm 01334 Fmt 8010 Sfmt 8010 Q:\40\256165.XXX PC31

(b) As specified in §63.10(b)(1), you must keep each record for 5 years following the date of each occurrence, measurement, maintenance, corrective action, report, or record.

(c) You must retain your records of the most recent 2 years on site or your records must be accessible on site. Your records of the remaining 3 years may be retained off site.

OTHER REQUIREMENTS AND INFORMATION

§63.6165 What parts of the General Provisions apply to me?

Table 7 of this subpart shows which parts of the General Provisions in §63.1 through 15 apply to you.

§63.6170 Who implements and enforces this subpart?

(a) This subpart is implemented and enforced by the U.S. EPA or a delegated authority such as your State, local, or tribal agency. If the EPA Administrator has delegated authority to your State, local, or tribal agency, then that agency (as well as the U.S. EPA) has the authority to implement and enforce this subpart. You should contact your EPA Regional Office to find out whether this subpart is delegated to your State, local, or tribal agency.

(b) In delegating implementation and enforcement authority of this subpart to a State, local, or tribal agency under section 40 CFR part 63, subpart E, the authorities contained in paragraph (c) of this section are retained by the EPA Administrator and are not transferred to the State, local, or tribal agency.

(c) The authorities that will not be delegated to State, local, or tribal agencies are:

(1) Approval of alternatives to the emission limitations or operating limitations in §63.6100 under §63.6(g).

(2) Approval of major alternatives to test methods under §63.7(e)(2)(ii) and (f) and as defined in §63.90.

(3) Approval of major alternatives to monitoring under §63.8(f) and as defined in §63.90.

(4) Approval of major alternatives to recordkeeping and reporting under §63.10(f) and as defined in §63.90.

(5) Approval of a performance test which was conducted prior to the effective date of the rule to determine outlet formaldehyde concentration, as specified in §63.6110(b).

(6) Approval of an alternative to any electronic reporting to the EPA required by this subpart.

[69 FR 10537, Mar. 5, 2004, as amended at 85 FR 13541, Mar. 9, 2020]

§63.6175 What definitions apply to this subpart?

Terms used in this subpart are defined in the CAA; in 40 CFR 63.2, the General Provisions of this part; and in this section:

Area source means any stationary source of HAP that is not a major source as defined in this part.

Associated equipment as used in this subpart and as referred to in section 112(n)(4) of the CAA, means equipment associated with an oil or natural gas exploration or production well, and includes all equipment from the well bore to the point of custody transfer, except glycol dehydration units, storage vessels with potential for flash emissions, combustion turbines, and stationary reciprocating internal combustion engines.

CAA means the Clean Air Act (42 U.S.C. 7401 *et seq.*, as amended by Public Law 101–549, 104 Stat. 2399).

Cogeneration cycle stationary combustion turbine means any stationary combustion turbine that recovers heat from the stationary combustion turbine exhaust gases using an exhaust heat exchanger, such as a heat recovery steam generator.

Combined cycle stationary combustion turbine means any stationary combustion turbine that recovers heat from the stationary combustion turbine exhaust gases using an exhaust heat exchanger to generate steam for use in a steam turbine.

Combustion turbine engine test cells/stands means engine test cells/stands, as defined in subpart PPPPP of this part, that test stationary combustion turbines.

Compressor station means any permanent combination of compressors that move natural gas at increased pressure from fields, in transmission pipelines, or into storage.

sfrattini on LAPJZKW1R2 with $$_JOB
VerDate Sep<11>2014 09:16 Apr 04, 2023 Jkt 256165 PO 00000 Frm 01335 Fmt 8010 Sfmt 8010 Q:\40\256165.XXX PC31

Custody transfer means the transfer of hydrocarbon liquids or natural gas: after processing and/or treatment in the producing operations, or from storage vessels or automatic transfer facilities or other such equipment, including product loading racks, to pipelines or any other forms of transportation. For the purposes of this subpart, the point at which such liquids or natural gas enters a natural gas processing plant is a point of custody transfer.

Deviation means any instance in which an affected source subject to this subpart, or an owner or operator of such a source:

(1) Fails to meet any requirement or obligation established by this subpart, including but not limited to any emission limitation or operating limitation;

(2) Fails to meet any term or condition that is adopted to implement an applicable requirement in this subpart and that is included in the operating permit for any affected source required to obtain such a permit;

(3) Fails to meet any emission limitation or operating limitation in this subpart during malfunction, regardless of whether or not such failure is permitted by this subpart;

(4) Before September 8, 2020, fails to satisfy the general duty to minimize emissions established by § 63.6(e)(1)(i), or

(5) After September 8, 2020, fails to satisfy the general duty to minimize emissions established by § 63.6105.

Diffusion flame gas-fired stationary combustion turbine means:

(1)(i) Each stationary combustion turbine which is equipped only to fire gas using diffusion flame technology,

(ii) Each stationary combustion turbine which is equipped both to fire gas using diffusion flame technology and to fire oil, during any period when it is firing gas, and

(iii) Each stationary combustion turbine which is equipped both to fire gas using diffusion flame technology and to fire oil, and is located at a major source where all new, reconstructed, and existing stationary combustion turbines fire oil no more than an aggregate total of 1000 hours during the calendar year.

(2) Diffusion flame gas-fired stationary combustion turbines do not include:

(i) Any emergency stationary combustion turbine,

(ii) Any stationary combustion turbine located on the North Slope of Alaska, or

(iii) Any stationary combustion turbine burning landfill gas or digester gas equivalent to 10 percent or more of the gross heat input on an annual basis, or any stationary combustion turbine where gasified MSW is used to generate 10 percent or more of the gross heat input on an annual basis.

Diffusion flame oil-fired stationary combustion turbine means:

(1)(i) Each stationary combustion turbine which is equipped only to fire oil using diffusion flame technology, and

(ii) Each stationary combustion turbine which is equipped both to fire oil using diffusion flame technology and to fire gas, and is located at a major source where all new, reconstructed, and existing stationary combustion turbines fire oil more than an aggregate total of 1000 hours during the calendar year, during any period when it is firing oil.

(2) Diffusion flame oil-fired stationary combustion turbines do not include:

(i) Any emergency stationary combustion turbine, or

(ii) Any stationary combustion turbine located on the North Slope of Alaska.

Diffusion flame technology means a configuration of a stationary combustion turbine where fuel and air are injected at the combustor and are mixed only by diffusion prior to ignition.

Digester gas means any gaseous byproduct of wastewater treatment typically formed through the anaerobic decomposition of organic waste materials and composed principally of methane and CO_2.

Distillate oil means any liquid obtained from the distillation of petroleum with a boiling point of approximately 150 to 360 degrees Celsius. One commonly used form is fuel oil number 2.

Emergency stationary combustion turbine means any stationary combustion

sfrattini on LAPJZKW1R2 with $$_JOB
VerDate Sep<11>2014 09:16 Apr 04, 2023 Jkt 256165 PO 00000 Frm 01336 Fmt 8010 Sfmt 8010 Q:\40\256165.XXX PC31

turbine that operates in an emergency situation. Examples include stationary combustion turbines used to produce power for critical networks or equipment (including power supplied to portions of a facility) when electric power from the local utility is interrupted, or stationary combustion turbines used to pump water in the case of fire or flood, etc. Emergency stationary combustion turbines do not include stationary combustion turbines used as peaking units at electric utilities or stationary combustion turbines at industrial facilities that typically operate at low capacity factors. Emergency stationary combustion turbines may be operated for the purpose of maintenance checks and readiness testing, provided that the tests are required by the manufacturer, the vendor, or the insurance company associated with the turbine. Required testing of such units should be minimized, but there is no time limit on the use of emergency stationary combustion turbines.

Glycol dehydration unit means a device in which a liquid glycol (including, but not limited to, ethylene glycol, diethylene glycol, or triethylene glycol) absorbent directly contacts a natural gas stream and absorbs water in a contact tower or absorption column (absorber). The glycol contacts and absorbs water vapor and other gas stream constituents from the natural gas and becomes ''rich'' glycol. This glycol is then regenerated in the glycol dehydration unit reboiler. The ''lean'' glycol is then recycled.

Hazardous air pollutant (HAP) means any air pollutant listed in or pursuant to section 112(b) of the CAA.

ISO standard day conditions means 288 degrees Kelvin (15 °C), 60 percent relative humidity and 101.3 kilopascals pressure.

Landfill gas means a gaseous by-product of the land application of municipal refuse typically formed through the anaerobic decomposition of waste materials and composed principally of methane and CO_2.

Lean premix gas-fired stationary combustion turbine means:

(1)(i) Each stationary combustion turbine which is equipped only to fire gas using lean premix technology,

(ii) Each stationary combustion turbine which is equipped both to fire gas using lean premix technology and to fire oil, during any period when it is firing gas, and

(iii) Each stationary combustion turbine which is equipped both to fire gas using lean premix technology and to fire oil, and is located at a major source where all new, reconstructed, and existing stationary combustion turbines fire oil no more than an aggregate total of 1000 hours during the calendar year.

(2) Lean premix gas-fired stationary combustion turbines do not include:

(i) Any emergency stationary combustion turbine,

(ii) Any stationary combustion turbine located on the North Slope of Alaska, or

(iii) Any stationary combustion turbine burning landfill gas or digester gas equivalent to 10 percent or more of the gross heat input on an annual basis, or any stationary combustion turbine where gasified MSW is used to generate 10 percent or more of the gross heat input on an annual basis.

Lean premix oil-fired stationary combustion turbine means:

(1)(i) Each stationary combustion turbine which is equipped only to fire oil using lean premix technology, and

(ii) Each stationary combustion turbine which is equipped both to fire oil using lean premix technology and to fire gas, and is located at a major source where all new, reconstructed, and existing stationary combustion turbines fire oil more than an aggregate total of 1000 hours during the calendar year, during any period when it is firing oil.

(2) Lean premix oil-fired stationary combustion turbines do not include:

(i) Any emergency stationary combustion turbine, or

(ii) Any stationary combustion turbine located on the North Slope of Alaska.

Lean premix technology means a configuration of a stationary combustion turbine where the air and fuel are thoroughly mixed to form a lean mixture for combustion in the combustor. Mixing may occur before or in the combustion chamber.

sfrattini on LAPJZKW1R2 with $$_JOB
VerDate Sep<11>2014 09:16 Apr 04, 2023 Jkt 256165 PO 00000 Frm 01337 Fmt 8010 Sfmt 8010 Q:\40\256165.XXX PC31

Major source, as used in this subpart, shall have the same meaning as in § 63.2, except that:

(1) Emissions from any oil or gas exploration or production well (with its associated equipment (as defined in this section)) and emissions from any pipeline compressor station or pump station shall not be aggregated with emissions from other similar units, to determine whether such emission points or stations are major sources, even when emission points are in a contiguous area or under common control;

(2) For oil and gas production facilities, emissions from processes, operations, or equipment that are not part of the same oil and gas production facility, as defined in this section, shall not be aggregated;

(3) For production field facilities, only HAP emissions from glycol dehydration units, storage vessel with the potential for flash emissions, combustion turbines and reciprocating internal combustion engines shall be aggregated for a major source determination; and

(4) Emissions from processes, operations, and equipment that are not part of the same natural gas transmission and storage facility, as defined in this section, shall not be aggregated.

Malfunction means any sudden, infrequent, and not reasonably preventable failure of air pollution control equipment, process equipment, or a process to operate in a normal or usual manner which causes or has the potential to cause the emission limitations in this standard to be exceeded. Failures that are caused in part by poor maintenance or careless operation are not malfunctions.

Municipal solid waste as used in this subpart is as defined in § 60.1465 of Subpart AAAA of 40 CFR Part 60, New Source Performance Standards for Small Municipal Waste Combustion Units.

Natural gas means a naturally occurring mixture of hydrocarbon and nonhydrocarbon gases found in geologic formations beneath the Earth's surface, of which the principal constituent is methane. May be field or pipeline quality. For the purposes of this subpart, the definition of natural gas includes similarly constituted fuels such as field gas, refinery gas, and syngas.

Natural gas transmission means the pipelines used for the long distance transport of natural gas (excluding processing). Specific equipment used in natural gas transmission includes the land, mains, valves, meters, boosters, regulators, storage vessels, dehydrators, compressors, and their driving units and appurtenances, and equipment used transporting gas from a production plant, delivery point of purchased gas, gathering system, storage area, or other wholesale source of gas to one or more distribution area(s).

Natural gas transmission and storage facility means any grouping of equipment where natural gas is processed, compressed, or stored prior to entering a pipeline to a local distribution company or (if there is no local distribution company) to a final end user. Examples of a facility for this source category are: an underground natural gas storage operation; or a natural gas compressor station that receives natural gas via pipeline, from an underground natural gas storage operation, or from a natural gas processing plant. The emission points associated with these phases include, but are not limited to, process vents. Processes that may have vents include, but are not limited to, dehydration and compressor station engines. Facility, for the purpose of a major source determination, means natural gas transmission and storage equipment that is located inside the boundaries of an individual surface site (as defined in this section) and is connected by ancillary equipment, such as gas flow lines or power lines. Equipment that is part of a facility will typically be located within close proximity to other equipment located at the same facility. Natural gas transmission and storage equipment or groupings of equipment located on different gas leases, mineral fee tracts, lease tracts, subsurface unit areas, surface fee tracts, or surface lease tracts shall not be considered part of the same facility.

North Slope of Alaska means the area north of the Arctic Circle (latitude 66.5 degrees North).

Oil and gas production facility as used in this subpart means any grouping of

sfrattini on LAPJZKW1R2 with $$_JOB
VerDate Sep<11>2014 09:16 Apr 04, 2023 Jkt 256165 PO 00000 Frm 01338 Fmt 8010 Sfmt 8010 Q:\40\256165.XXX PC31

equipment where hydrocarbon liquids are processed, upgraded (*i.e.*, remove impurities or other constituents to meet contract specifications), or stored prior to the point of custody transfer; or where natural gas is processed, upgraded, or stored prior to entering the natural gas transmission and storage source category. For purposes of a major source determination, facility (including a building, structure, or installation) means oil and natural gas production and processing equipment that is located within the boundaries of an individual surface site as defined in this section. Equipment that is part of a facility will typically be located within close proximity to other equipment located at the same facility. Pieces of production equipment or groupings of equipment located on different oil and gas leases, mineral fee tracts, lease tracts, subsurface or surface unit areas, surface fee tracts, surface lease tracts, or separate surface sites, whether or not connected by a road, waterway, power line or pipeline, shall not be considered part of the same facility. Examples of facilities in the oil and natural gas production source category include, but are not limited to, well sites, satellite tank batteries, central tank batteries, a compressor station that transports natural gas to a natural gas processing plant, and natural gas processing plants.

Oxidation catalyst emission control device means an emission control device that incorporates catalytic oxidation to reduce CO emissions.

Potential to emit means the maximum capacity of a stationary source to emit a pollutant under its physical and operational design. Any physical or operational limitation on the capacity of the stationary source to emit a pollutant, including air pollution control equipment and restrictions on hours of operation or on the type or amount of material combusted, stored, or processed, shall be treated as part of its design if the limitation or the effect it would have on emissions is federally enforceable. For oil and natural gas production facilities subject to subpart HH of this part, the potential to emit provisions in §63.760(a) may be used. For natural gas transmission and storage facilities subject to subpart HHH of this part, the maximum annual facility gas throughput for storage facilities may be determined according to §63.1270(a)(1) and the maximum annual throughput for transmission facilities may be determined according to §63.1270(a)(2).

Production field facility means those oil and gas production facilities located prior to the point of custody transfer.

Production well means any hole drilled in the earth from which crude oil, condensate, or field natural gas is extracted.

Regenerative/recuperative cycle stationary combustion turbine means any stationary combustion turbine that recovers heat from the stationary combustion turbine exhaust gases using an exhaust heat exchanger to preheat the combustion air entering the combustion chamber of the stationary combustion turbine.

Research or laboratory facility means any stationary source whose primary purpose is to conduct research and development into new processes and products, where such source is operated under the close supervision of technically trained personnel and is not engaged in the manufacture of products for commercial sale in commerce, except in a *de minimis* matter.

Simple cycle stationary combustion turbine means any stationary combustion turbine that does not recover heat from the stationary combustion turbine exhaust gases.

Startup begins at the first firing of fuel in the stationary combustion turbine. For simple cycle turbines, startup ends when the stationary combustion turbine has reached stable operation or after 1 hour, whichever is less. For combined cycle turbines, startup ends when the stationary combustion turbine has reached stable operation or after 3 hours, whichever is less. Turbines in combined cycle configurations that are operating as simple cycle turbines must meet the startup requirements for simple cycle turbines while operating as simple cycle turbines.

sfrattini on LAPJZKW1R2 with $$_JOB
VerDate Sep<11>2014 09:16 Apr 04, 2023 Jkt 256165 PO 00000 Frm 01339 Fmt 8010 Sfmt 8010 Q:\40\256165.XXX PC31

Stationary combustion turbine means all equipment, including but not limited to the turbine, the fuel, air, lubrication and exhaust gas systems, control systems (except emissions control equipment), and any ancillary components and sub-components comprising any simple cycle stationary combustion turbine, any regenerative/recuperative cycle stationary combustion turbine, the combustion turbine portion of any stationary cogeneration cycle combustion system, or the combustion turbine portion of any stationary combined cycle steam/electric generating system. Stationary means that the combustion turbine is not self propelled or intended to be propelled while performing its function. Stationary combustion turbines do not include turbines located at a research or laboratory facility, if research is conducted on the turbine itself and the turbine is not being used to power other applications at the research or laboratory facility.

Storage vessel with the potential for flash emissions means any storage vessel that contains a hydrocarbon liquid with a stock tank gas-to-oil ratio equal to or greater than 0.31 cubic meters per liter and an American Petroleum Institute gravity equal to or greater than 40 degrees and an actual annual average hydrocarbon liquid throughput equal to or greater than 79,500 liters per day. Flash emissions occur when dissolved hydrocarbons in the fluid evolve from solution when the fluid pressure is reduced.

Surface site means any combination of one or more graded pad sites, gravel pad sites, foundations, platforms, or the immediate physical location upon which equipment is physically affixed.

[69 FR 10537, Mar. 5, 2004, as amended at 71 FR 20467, Apr. 20, 2006; 85 FR 13541, Mar. 9, 2020]

TABLE 1 TO SUBPART YYYY OF PART 63—EMISSION LIMITATIONS

As stated in § 63.6100, you must comply with the following emission limitations.

For each new or reconstructed stationary combustion turbine described in § 63.6100 which is . . .	You must meet the following emission limitations . . .
1. a lean premix gas-fired stationary combustion turbine as defined in this subpart, 2. a lean premix oil-fired stationary combustion turbine as defined in this subpart, 3. a diffusion flame gas-fired stationary combustion turbine as defined in this subpart, or 4. a diffusion flame oil-fired stationary combustion turbine as defined in this subpart.	limit the concentration of formaldehyde to 91 ppbvd or less at 15-percent O_2, except during turbine startup. The period of time for turbine startup is subject to the limits specified in the definition of startup in § 63.6175.

[85 FR 13542, Mar. 9, 2020]

TABLE 2 TO SUBPART YYYY OF PART 63—OPERATING LIMITATIONS

As stated in §§ 63.6100 and 63.6140, you must comply with the following operating limitations.

For . . .	You must . . .
1. each stationary combustion turbine that is required to comply with the emission limitation for formaldehyde and is using an oxidation catalyst.	maintain the 4-hour rolling average of the catalyst inlet temperature within the range suggested by the catalyst manufacturer. You are not required to use the catalyst inlet temperature data that is recorded during engine startup in the calculations of the 4-hour rolling average catalyst inlet temperature.
2. each stationary combustion turbine that is required to comply with the emission limitation for formaldehyde and is not using an oxidation catalyst.	maintain any operating limitations approved by the Administrator.

[85 FR 13542, Mar. 9, 2020]

sfrattini on LAPJZKW1R2 with $$_JOB
VerDate Sep<11>2014 09:16 Apr 04, 2023 Jkt 256165 PO 00000 Frm 01340 Fmt 8010 Sfmt 8002 Q:\40\256165.XXX PC31

TABLE 3 TO SUBPART YYYY OF PART 63—REQUIREMENTS FOR PERFORMANCE TESTS AND INITIAL COMPLIANCE DEMONSTRATIONS

As stated in § 63.6120, you must comply with the following requirements for performance tests and initial compliance demonstrations.

You must . . .	Using . . .	According to the following requirements . . .
a. demonstrate formaldehyde emissions meet the emission limitations specified in Table 1 by a performance test initially and on an annual basis AND.	Test Method 320 of 40 CFR part 63, appendix A; ASTM D6348–12e1 [1] provided that the test plan preparation and implementation provisions of Annexes A1 through A8 are followed and the %R as determined in Annex A5 is equal or greater than 70% and less than or equal to 130%; [2] or other methods approved by the Administrator.	formaldehyde concentration must be corrected to 15-percent O_2, dry basis. Results of this test consist of the average of the three 1-hour runs. Test must be conducted within 10 percent of 100-percent load.
b. select the sampling port location and the number of traverse points AND.	Method 1 or 1A of 40 CFR part 60, appendix A.	if using an air pollution control device, the sampling site must be located at the outlet of the air pollution control device.
c. determine the O_2 concentration at the sampling port location AND.	Method 3A or 3B of 40 CFR part 60, appendix A; ANSI/ASME PTC 19.10–1981 [1] (Part 10) manual portion only; ASTM D6522–11 [1] if the turbine is fueled by natural gas.	measurements to determine O_2 concentration must be made at the same time as the performance test.
d. determine the moisture content at the sampling port location for the purposes of correcting the formaldehyde concentration to a dry basis.	Method 4 of 40 CFR part 60, appendix A or Test Method 320 of 40 CFR part 63, appendix A, or ASTM D6348–12e1 [1].	measurements to determine moisture content must be made at the same time as the performance test.

[1] Incorporated by reference, see § 63.14.
[2] The %R value for each compound must be reported in the test report, and all field measurements must be corrected with the calculated %R value for that compound using the following equation:
Reported Results = ((Measured Concentration in Stack)/(%R)) × 100.

[85 FR 13542, Mar. 9, 2020]

TABLE 4 TO SUBPART YYYY OF PART 63—INITIAL COMPLIANCE WITH EMISSION LIMITATIONS

As stated in §§ 63.6110 and 63.6130, you must comply with the following requirements to demonstrate initial compliance with emission limitations

For the . . .	You have demonstrated initial compliance if . . .
emission limitation for formaldehyde..	the average formaldehyde concentration meets the emission limitations specified in Table 1.

TABLE 5 TO SUBPART YYYY OF PART 63—CONTINUOUS COMPLIANCE WITH OPERATING LIMITATIONS

As stated in §§ 63.6135 and 63.6140, you must comply with the following requirements to demonstrate continuing compliance with operating limitations:

For each stationary combustion turbine complying with the emission limitation for formaldehyde . . .	You must demonstrate continuous compliance by . . .
1. with an oxidation catalyst	continuously monitoring the inlet temperature to the catalyst and maintaining the 4-hour rolling average of the inlet temperature within the range suggested by the catalyst manufacturer.
2. without the use of an oxidation catalyst	continuously monitoring the operating limitations that have been approved in your petition to the Administrator.

sfrattini on LAPJZKW1R2 with $$_JOB
VerDate Sep<11>2014 09:16 Apr 04, 2023 Jkt 256165 PO 00000 Frm 01341 Fmt 8010 Sfmt 8026 Q:\40\256165.XXX PC31

TABLE 6 TO SUBPART YYYY OF PART 63—REQUIREMENTS FOR REPORTS

As stated in § 63.6150, you must comply with the following requirements for reports

If you own or operate a . . .	you must . . .	According to the following requirements . . .
1. stationary combustion turbine which must comply with the formaldehyde emission limitation.	report your compliance status	semiannually, according to the requirements of § 63.6150.
2. stationary combustion turbine which fires landfill gas, digester gas or gasified MSW equivalent to 10 percent or more of the gross heat input on an annual basis.	report (1) the fuel flow rate of each fuel and the heating values that were used in your calculations, and you must demonstrate that the percentage of heat input provided by landfill gas, digester gas, or gasified MSW is equivalent to 10 percent or more of the gross heat input on an annual basis, (2) the operating limits provided in your federally enforceable permit, and any deviations from these limits, and (3) any problems or errors suspected with the meters.	annually, according to the requirements in § 63.6150.
3. a lean premix gas-fired stationary combustion turbine or a diffusion flame gas-fired stationary combustion turbine as defined by this subpart, and you use any quantity of distillate oil to fire any new or existing stationary combustion turbine which is located at the same major source.	report (1) the number of hours distillate oil was fired by each new or existing stationary combustion turbine during the reporting period, (2) the operating limits provided in your federally enforceable permit, and any deviations from these limits, and (3) any problems or errors suspected with the meters.	annually, according to the requirements in § 63.6150.

TABLE 7 TO SUBPART YYYY OF PART 63—APPLICABILITY OF GENERAL PROVISIONS TO SUBPART YYYY

You must comply with the applicable General Provisions requirements:

Citation	Subject	Applies to subpart YYYY	Explanation
§ 63.1	General applicability of the General Provisions.	Yes	Additional terms defined in § 63.6175.
§ 63.2	Definitions	Yes	Additional terms defined in § 63.6175.
§ 63.3	Units and abbreviations	Yes.	
§ 63.4	Prohibited activities	Yes.	
§ 63.5	Construction and reconstruction	Yes.	
§ 63.6(a)	Applicability	Yes.	
§ 63.6(b)(1)–(4)	Compliance dates for new and reconstructed sources.	Yes.	
§ 63.6(b)(5)	Notification	Yes.	
§ 63.6(b)(6)	[Reserved].		
§ 63.6(b)(7)	Compliance dates for new and reconstructed area sources that become major.	Yes.	
§ 63.6(c)(1)–(2)	Compliance dates for existing sources.	Yes.	
§ 63.6(c)(3)–(4)	[Reserved].		
§ 63.6(c)(5)	Compliance dates for existing area sources that become major.	Yes.	
§ 63.6(d)	[Reserved].		
§ 63.6(e)(1)(i)	General duty to minimize emissions.	Yes before September 8, 2020. No after September 8, 2020. See § 63.6105 for general duty requirement.	

sfrattini on LAPJZKW1R2 with $$_JOB
VerDate Sep<11>2014 09:16 Apr 04, 2023 Jkt 256165 PO 00000 Frm 01342 Fmt 8010 Sfmt 8002 Q:\40\256165.XXX PC31

Citation	Subject	Applies to subpart YYYY	Explanation
§ 63.6(e)(1)(ii)	Requirement to correct malfunctions ASAP.	Yes before September 8, 2020. No after September 8, 2020.	
§ 63.6(e)(1)(iii)	Operation and Maintenance Requirements.	Yes.	
§ 63.6(e)(2)	[Reserved].		
§ 63.6(e)(3)	SSMP	Yes before September 8, 2020. No after September 8, 2020.	
§ 63.6(f)(1)	Applicability of standards except during startup, shutdown, or malfunction (SSM).	Yes before September 8, 2020. No after September 8, 2020.	
§ 63.6(f)(2)	Methods for determining compliance.	Yes.	
§ 63.6(f)(3)	Finding of compliance	Yes.	
§ 63.6(g)(1)–(3)	Use of alternative standard	Yes.	
§ 63.6(h)	Opacity and visible emission standards.	No	Subpart YYYY does not contain opacity or visible emission standards.
§ 63.6(i)	Compliance extension procedures and criteria.	Yes.	
§ 63.6(j)	Presidential compliance exemption.	Yes.	
§ 63.7(a)(1)–(2)	Performance test dates	Yes	Subpart YYYY contains performance test dates at § 63.6110.
§ 63.7(a)(3)	Section 114 authority	Yes.	
§ 63.7(b)(1)	Notification of performance test	Yes.	
§ 63.7(b)(2)	Notification of rescheduling	Yes.	
§ 63.7(c)	Quality assurance/test plan	Yes.	
§ 63.7(d)	Testing facilities	Yes.	
§ 63.7(e)(1)	Conditions for conducting performance tests.	Yes before September 8, 2020. No after September 8, 2020.	
§ 63.7(e)(2)	Conduct of performance tests and reduction of data.	Yes	Subpart YYYY specifies test methods at § 63.6120.
§ 63.7(e)(3)	Test run duration	Yes.	
§ 63.7(e)(4)	Administrator may require other testing under section 114 of the CAA.	Yes.	
§ 63.7(f)	Alternative test method provisions.	Yes.	
§ 63.7(g)	Performance test data analysis, recordkeeping, and reporting.	Yes.	
§ 63.7(h)	Waiver of tests	Yes.	
§ 63.8(a)(1)	Applicability of monitoring requirements.	Yes	Subpart YYYY contains specific requirements for monitoring at § 63.6125.
§ 63.8(a)(2)	Performance specifications	Yes.	
§ 63.8(a)(3)	[Reserved].		
§ 63.8(a)(4)	Monitoring for control devices	No.	
§ 63.8(b)(1)	Monitoring	Yes.	
§ 63.8(b)(2)–(3)	Multiple effluents and multiple monitoring systems.	Yes.	
§ 63.8(c)(1)	Monitoring system operation and maintenance.	Yes.	
§ 63.8(c)(1)(i)	General duty to minimize emissions and CMS operation.	Yes before September 8, 2020. No after September 8, 2020.	
§ 63.8(c)(1)(ii)	Parts for repair of CMS readily available.	Yes.	
§ 63.8(c)(1)(iii)	Requirement to develop SSM Plan for CMS.	Yes before September 8, 2020. No after September 8, 2020.	
§ 63.8(c)(2)–(3)	Monitoring system installation	Yes.	
§ 63.8(c)(4)	Continuous monitoring system (CMS) requirements.	Yes	Except that subpart YYYY does not require continuous opacity monitoring systems (COMS).

sfrattini on LAPJZKW1R2 with $$_JOB
VerDate Sep<11>2014 09:16 Apr 04, 2023 Jkt 256165 PO 00000 Frm 01343 Fmt 8010 Sfmt 8002 Q:\40\256165.XXX PC31

Citation	Subject	Applies to subpart YYYY	Explanation
§ 63.8(c)(5)	COMS minimum procedures	No.	
§ 63.8(c)(6)–(8)	CMS requirements	Yes	Except that subpart YYYY does not require COMS.
§ 63.8(d)(1)–(2)	CMS quality control	Yes.	
§ 63.8(d)(3)	Written procedures for CMS	Yes before September 8, 2020. No after September 8, 2020.	
§ 63.8(e)	CMS performance evaluation	Yes	Except for § 63.8(e)(5)(ii), which applies to COMS.
§ 63.8(f)(1)–(5)	Alternative monitoring method	Yes.	
§ 63.8(f)(6)	Alternative to relative accuracy test.	Yes.	
§ 63.8(g)	Data reduction	Yes	Except that provisions for COMS are not applicable. Averaging periods for demonstrating compliance are specified at §§ 63.6135 and 63.6140.
§ 63.9(a)	Applicability and State delegation of notification requirements.	Yes.	
§ 63.9(b)(1)–(5)	Initial notifications	Yes	Except that § 63.9(b)(3) is reserved.
§ 63.9(c)	Request for compliance extension.	Yes.	
§ 63.9(d)	Notification of special compliance requirements for new sources.	Yes.	
§ 63.9(e)	Notification of performance test	Yes.	
§ 63.9(f)	Notification of visible emissions/opacity test.	No	Subpart YYYY does not contain opacity or VE standards.
§ 63.9(g)(1)	Notification of performance evaluation.	Yes.	
§ 63.9(g)(2)	Notification of use of COMS data.	No	Subpart YYYY does not contain opacity or VE standards.
§ 63.9(g)(3)	Notification that criterion for alternative to relative accuracy test audit (RATA) is exceeded.	Yes.	
§ 63.9(h)	Notification of compliance status	Yes	Except that notifications for sources not conducting performance tests are due 30 days after completion of performance evaluations. § 63.9(h)(4) is reserved.
§ 63.9(i)	Adjustment of submittal deadlines.	Yes.	
§ 63.9(j)	Change in previous information	Yes.	
§ 63.9(k)	Electronic reporting procedures	Yes	Only as specified in § 63.9(j).
§ 63.10(a)	Administrative provisions for recordkeeping and reporting.	Yes.	
§ 63.10(b)(1)	Record retention	Yes.	
§ 63.10(b)(2)(i)	Recordkeeping of occurrence and duration of startups and shutdowns.	Yes before September 8, 2020. No after September 8, 2020.	
§ 63.10(b)(2)(ii)	Recordkeeping of failures to meet a standard.	Yes before September 8, 2020. No after September 8, 2020. See § 63.6155 for recordkeeping of (1) date, time and duration; (2) listing of affected source or equipment, and an estimate of the quantity of each regulated pollutant emitted over the standard; and (3) actions to minimize emissions and correct the failure.	

sfrattini on LAPJZKW1R2 with $$_JOB
VerDate Sep<11>2014 09:16 Apr 04, 2023 Jkt 256165 PO 00000 Frm 01344 Fmt 8010 Sfmt 8002 Q:\40\256165.XXX PC31

Citation	Subject	Applies to subpart YYYY	Explanation
§ 63.10(b)(2)(iii)	Maintenance records	Yes.	
§ 63.10(b)(2)(iv)–(v)	Records related to actions during SSM.	Yes before September 8, 2020. No after September 8, 2020.	
§ 63.10(b)(2)(vi)–(xi)	CMS records	Yes.	
§ 63.10(b)(2)(xii)	Record when under waiver	Yes.	
§ 63.10(b)(2)(xiii)	Records when using alternative to RATA.	Yes.	
§ 63.10(b)(2)(xiv)	Records of supporting documentation.	Yes.	
§ 63.10(b)(3)	Records of applicability determination.	Yes.	
§ 63.10(c)(1)–(14)	Additional records for sources using CMS.	Yes	Except that § 63.10(c)(2)–(4) and (9) are reserved.
§ 63.10(c)(15)	Use of SSM Plan	Yes before September 8, 2020. No after September 8, 2020.	
§ 63.10(d)(1)	General reporting requirements	Yes.	
§ 63.10(d)(2)	Report of performance test results.	Yes.	
§ 63.10(d)(3)	Reporting opacity or VE observations.	No	Subpart YYYY does not contain opacity or VE standards.
§ 63.10(d)(4)	Progress reports	Yes.	
§ 63.10(d)(5)	Startup, shutdown, and malfunction reports.	No. After September 8, 2020, see 63.6150(a) for malfunction reporting requirements.	
§ 63.10(e)(1) and (2)(i)	Additional CMS reports	Yes.	
§ 63.10(e)(2)(ii)	COMS-related report	No	Subpart YYYY does not require COMS.
§ 63.10(e)(3)	Excess emissions and parameter exceedances reports.	Yes	After September 8, 2020 submitted with the compliance report through CEDRI according to § 63.6150(a).
§ 63.10(e)(4)	Reporting COMS data	No	Subpart YYYY does not require COMS.
§ 63.10(f)	Waiver for recordkeeping and reporting.	Yes.	
§ 63.11	Flares	No.	
§ 63.12	State authority and delegations	Yes.	
§ 63.13	Addresses	Yes	After September 8, 2020 not applicable to reports required to be submitted through CEDRI by 63.6150(c), (e), (f), or (g).
§ 63.14	Incorporation by reference	Yes.	
§ 63.15	Availability of information	Yes.	

[85 FR 13543, Mar. 9, 2020, as amended at 85 FR 73911, Nov. 19, 2020]

sfrattini on LAPJZKW1R2 with $$_JOB
VerDate Sep<11>2014 09:16 Apr 04, 2023 Jkt 256165 PO 00000 Frm 01345 Fmt 8010 Sfmt 8026 Q:\40\256165.XXX PC31