AUTHENTICATED
U.S. GOVERNMENT
INFORMATION
GPO

CODE OF FEDERAL REGULATIONS

Title 40
Protection of Environment

Part 1060 to End

Revised as of July 1, 2021

Containing a codification of documents
of general applicability and future effect

As of July 1, 2021

Published by the Office of the Federal Register
National Archives and Records Administration
as a Special Edition of the Federal Register

U.S. GOVERNMENT OFFICIAL EDITION NOTICE

Legal Status and Use of Seals and Logos

The seal of the National Archives and Records Administration (NARA) authenticates the Code of Federal Regulations (CFR) as the official codification of Federal regulations established under the Federal Register Act. Under the provisions of 44 U.S.C. 1507, the contents of the CFR, a special edition of the Federal Register, shall be judicially noticed. The CFR is prima facie evidence of the original documents published in the Federal Register (44 U.S.C. 1510).

It is prohibited to use NARA's official seal and the stylized Code of Federal Regulations logo on any republication of this material without the express, written permission of the Archivist of the United States or the Archivist's designee. Any person using NARA's official seals and logos in a manner inconsistent with the provisions of 36 CFR part 1200 is subject to the penalties specified in 18 U.S.C. 506, 701, and 1017.

Use of ISBN Prefix

This is the Official U.S. Government edition of this publication and is herein identified to certify its authenticity. Use of the 0–16 ISBN prefix is for U.S. Government Publishing Office Official Editions only. The Superintendent of Documents of the U.S. Government Publishing Office requests that any reprinted edition clearly be labeled as a copy of the authentic work with a new ISBN.

GPO U.S. GOVERNMENT PUBLISHING OFFICE

U.S. Superintendent of Documents • Washington, DC 20402–0001

http://bookstore.gpo.gov

Phone: toll-free (866) 512-1800; DC area (202) 512-1800

Table of Contents

	Page
Explanation	v
Title 40:	
Chapter I—Environmental Protection Agency (Continued)	3
Chapter IV—Environmental Protection Agency and Department of Justice	589
Chapter V—Council on Environmental Quality	597
Chapter VI—Chemical Safety and Hazard Investigation Board	649
Chapter VII—Environmental Protection Agency and Department of Defense; Uniform National Discharge Standards for Vessels of the Armed Forces	691
Chapter VIII—Gulf Coast Ecosystem Restoration Council	711
Chapter IX—Federal Permitting Improvement Steering Council	733
Finding Aids:	
Table of CFR Titles and Chapters	739
Alphabetical List of Agencies Appearing in the CFR	759
List of CFR Sections Affected	769

Cite this Code: CFR

To cite the regulations in this volume use title, part and section number. Thus, 40 CFR 1060.1 *refers to title 40, part 1060, section 1.*

Explanation

The Code of Federal Regulations is a codification of the general and permanent rules published in the Federal Register by the Executive departments and agencies of the Federal Government. The Code is divided into 50 titles which represent broad areas subject to Federal regulation. Each title is divided into chapters which usually bear the name of the issuing agency. Each chapter is further subdivided into parts covering specific regulatory areas.

Each volume of the Code is revised at least once each calendar year and issued on a quarterly basis approximately as follows:

Title 1 through Title 16.....as of January 1
Title 17 through Title 27.....as of April 1
Title 28 through Title 41.....as of July 1
Title 42 through Title 50.....as of October 1

The appropriate revision date is printed on the cover of each volume.

LEGAL STATUS

The contents of the Federal Register are required to be judicially noticed (44 U.S.C. 1507). The Code of Federal Regulations is prima facie evidence of the text of the original documents (44 U.S.C. 1510).

HOW TO USE THE CODE OF FEDERAL REGULATIONS

The Code of Federal Regulations is kept up to date by the individual issues of the Federal Register. These two publications must be used together to determine the latest version of any given rule.

To determine whether a Code volume has been amended since its revision date (in this case, July 1, 2021), consult the ''List of CFR Sections Affected (LSA),'' which is issued monthly, and the ''Cumulative List of Parts Affected,'' which appears in the Reader Aids section of the daily Federal Register. These two lists will identify the Federal Register page number of the latest amendment of any given rule.

EFFECTIVE AND EXPIRATION DATES

Each volume of the Code contains amendments published in the Federal Register since the last revision of that volume of the Code. Source citations for the regulations are referred to by volume number and page number of the Federal Register and date of publication. Publication dates and effective dates are usually not the same and care must be exercised by the user in determining the actual effective date. In instances where the effective date is beyond the cutoff date for the Code a note has been inserted to reflect the future effective date. In those instances where a regulation published in the Federal Register states a date certain for expiration, an appropriate note will be inserted following the text.

OMB CONTROL NUMBERS

The Paperwork Reduction Act of 1980 (Pub. L. 96–511) requires Federal agencies to display an OMB control number with their information collection request.

Many agencies have begun publishing numerous OMB control numbers as amendments to existing regulations in the CFR. These OMB numbers are placed as close as possible to the applicable recordkeeping or reporting requirements.

PAST PROVISIONS OF THE CODE

Provisions of the Code that are no longer in force and effect as of the revision date stated on the cover of each volume are not carried. Code users may find the text of provisions in effect on any given date in the past by using the appropriate List of CFR Sections Affected (LSA). For the convenience of the reader, a ''List of CFR Sections Affected'' is published at the end of each CFR volume. For changes to the Code prior to the LSA listings at the end of the volume, consult previous annual editions of the LSA. For changes to the Code prior to 2001, consult the List of CFR Sections Affected compilations, published for 1949-1963, 1964-1972, 1973-1985, and 1986-2000.

''[RESERVED]'' TERMINOLOGY

The term ''[Reserved]'' is used as a place holder within the Code of Federal Regulations. An agency may add regulatory information at a ''[Reserved]'' location at any time. Occasionally ''[Reserved]'' is used editorially to indicate that a portion of the CFR was left vacant and not dropped in error.

INCORPORATION BY REFERENCE

What is incorporation by reference? Incorporation by reference was established by statute and allows Federal agencies to meet the requirement to publish regulations in the Federal Register by referring to materials already published elsewhere. For an incorporation to be valid, the Director of the Federal Register must approve it. The legal effect of incorporation by reference is that the material is treated as if it were published in full in the Federal Register (5 U.S.C. 552(a)). This material, like any other properly issued regulation, has the force of law.

What is a proper incorporation by reference? The Director of the Federal Register will approve an incorporation by reference only when the requirements of 1 CFR part 51 are met. Some of the elements on which approval is based are:

(a) The incorporation will substantially reduce the volume of material published in the Federal Register.

(b) The matter incorporated is in fact available to the extent necessary to afford fairness and uniformity in the administrative process.

(c) The incorporating document is drafted and submitted for publication in accordance with 1 CFR part 51.

What if the material incorporated by reference cannot be found? If you have any problem locating or obtaining a copy of material listed as an approved incorporation by reference, please contact the agency that issued the regulation containing that incorporation. If, after contacting the agency, you find the material is not available, please notify the Director of the Federal Register, National Archives and Records Administration, 8601 Adelphi Road, College Park, MD 20740-6001, or call 202-741-6010.

CFR INDEXES AND TABULAR GUIDES

A subject index to the Code of Federal Regulations is contained in a separate volume, revised annually as of January 1, entitled CFR INDEX AND FINDING AIDS. This volume contains the Parallel Table of Authorities and Rules. A list of CFR titles, chapters, subchapters, and parts and an alphabetical list of agencies publishing in the CFR are also included in this volume.

An index to the text of ''Title 3—The President'' is carried within that volume.

The Federal Register Index is issued monthly in cumulative form. This index is based on a consolidation of the ''Contents'' entries in the daily Federal Register.

A List of CFR Sections Affected (LSA) is published monthly, keyed to the revision dates of the 50 CFR titles.

REPUBLICATION OF MATERIAL

There are no restrictions on the republication of material appearing in the Code of Federal Regulations.

INQUIRIES

For a legal interpretation or explanation of any regulation in this volume, contact the issuing agency. The issuing agency's name appears at the top of odd-numbered pages.

For inquiries concerning CFR reference assistance, call 202–741–6000 or write to the Director, Office of the Federal Register, National Archives and Records Administration, 8601 Adelphi Road, College Park, MD 20740-6001 or e-mail *fedreg.info@nara.gov*.

SALES

The Government Publishing Office (GPO) processes all sales and distribution of the CFR. For payment by credit card, call toll-free, 866-512-1800, or DC area, 202-512-1800, M-F 8 a.m. to 4 p.m. e.s.t. or fax your order to 202-512-2104, 24 hours a day. For payment by check, write to: US Government Publishing Office – New Orders, P.O. Box 979050, St. Louis, MO 63197-9000.

ELECTRONIC SERVICES

The full text of the Code of Federal Regulations, the LSA (List of CFR Sections Affected), The United States Government Manual, the Federal Register, Public Laws, Public Papers of the Presidents of the United States, Compilation of Presidential Documents and the Privacy Act Compilation are available in electronic format via *www.govinfo.gov*. For more information, contact the GPO Customer Contact Center, U.S. Government Publishing Office. Phone 202-512-1800, or 866-512-1800 (toll-free). E-mail, *ContactCenter@gpo.gov*.

The Office of the Federal Register also offers a free service on the National Archives and Records Administration's (NARA) website for public law numbers, Federal Register finding aids, and related information. Connect to NARA's website at *www.archives.gov/federal-register*.

The e-CFR is a regularly updated, unofficial editorial compilation of CFR material and Federal Register amendments, produced by the Office of the Federal Register and the Government Publishing Office. It is available at *www.ecfr.gov*.

OLIVER A. POTTS,
Director,
Office of the Federal Register
July 1, 2021

THIS TITLE

Title 40—PROTECTION OF ENVIRONMENT is composed of thirty-seven volumes. The parts in these volumes are arranged in the following order: Parts 1–49, parts 50–51, part 52 (52.01–52.1018), part 52 (52.1019–52.2019), part 52 (52.2020–end of part 52), parts 53–59, part 60 (60.1–60.499), part 60 (60.500–end of part 60, sections), part 60 (Appendices), parts 61–62, part 63 (63.1–63.599), part 63 (63.600–63.1199), part 63 (63.1200–63.1439), part 63 (63.1440–63.6175), part 63 (63.6580–63.8830), part 63 (63.8980–end of part 63), parts 64–71, parts 72–79, part 80, part 81, parts 82–86, parts 87–95, parts 96–99, parts 100–135, parts 136–149, parts 150–189, parts 190–259, parts 260–265, parts 266–299, parts 300–399, parts 400–424, parts 425–699, parts 700–722, parts 723–789, parts 790–999, parts 1000–1059, and part 1060 to end. The contents of these volumes represent all current regulations codified under this title of the CFR as of July 1, 2021.

Chapter I—Environmental Protection Agency appears in all thirty-seven volumes. OMB control numbers for title 40 appear in § 9.1 of this chapter.

Chapters IV–IX—Regulations issued by the Environmental Protection Agency and Department of Justice, Council on Environmental Quality, Chemical Safety and Hazard Investigation Board, Environmental Protection Agency and Department of Defense; Uniform National Discharge Standards for Vessels of the Armed Forces, Gulf Coast Ecosystem Restoration Council, and the Federal Permitting Improvement Steering Council appear in volume thirty seven.

For this volume, Michele Bugenhagen was Chief Editor. The Code of Federal Regulations publication program is under the direction of John Hyrum Martinez, assisted by Stephen J. Frattini.

Title 40—Protection of Environment

(This book contains part 1060 to end)

	Part
CHAPTER I—Environmental Protection Agency (Continued)	1060
CHAPTER IV—Environmental Protection Agency and Department of Justice	1400
CHAPTER V—Council on Environmental Quality	1500
CHAPTER VI—Chemical Safety and Hazard Investigation Board	1600
CHAPTER VII—Environmental Protection Agency and Department of Defense; Uniform National Discharge Standards for Vessels of the Armed Forces	1700
CHAPTER VIII—Gulf Coast Ecosystem Restoration Council	1800
CHAPTER IX—Federal Permitting Improvement Steering Council	1900

CHAPTER I—ENVIRONMENTAL PROTECTION AGENCY (CONTINUED)

EDITORIAL NOTE: Nomenclature changes to chapter I appear at 65 FR 47324, 47325, Aug. 2, 2000, and 66 FR 34375, 34376, June 28, 2001.

SUBCHAPTER U—AIR POLLUTION CONTROLS

Part		*Page*
1060	Control of evaporative emissions from new and in-use nonroad and stationary equipment	5
1065	Engine-testing procedures	46
1066	Vehicle-testing procedures	293
1068	General compliance provisions for highway, stationary, and nonroad programs	393
1074	Preemption of state standards and procedures for waiver of federal preemption for nonroad engines and nonroad vehicles	464
1075–1089	[Reserved]	
1090	Regulation of fuels, fuel additives, and regulated blendstocks	467
1091–1099	[Reserved]	

SUBCHAPTER U—AIR POLLUTION CONTROLS

PART 1060—CONTROL OF EVAPORATIVE EMISSIONS FROM NEW AND IN-USE NONROAD AND STATIONARY EQUIPMENT

Subpart A—Overview and Applicability

Sec.
1060.1 Which products are subject to this part's requirements?
1060.5 Do the requirements of this part apply to me?
1060.10 How is this part organized?
1060.15 Do any other CFR parts apply to me?
1060.30 Submission of information.

Subpart B—Emission Standards and Related Requirements

1060.101 What evaporative emission requirements apply under this part?
1060.102 What permeation emission control requirements apply for fuel lines?
1060.103 What permeation emission control requirements apply for fuel tanks?
1060.104 What running loss emission control requirements apply?
1060.105 What diurnal requirements apply for equipment?
1060.120 What emission-related warranty requirements apply?
1060.125 What maintenance instructions must I give to buyers?
1060.130 What installation instructions must I give to equipment manufacturers?
1060.135 How must I label and identify the engines and equipment I produce?
1060.137 How must I label and identify the fuel-system components I produce?

Subpart C—Certifying Emission Families

1060.201 What are the general requirements for obtaining a certificate of conformity?
1060.202 What are the certification requirements related to the general standards in §1060.101?
1060.205 What must I include in my application?
1060.210 What records should equipment manufacturers keep if they do not apply for certification?
1060.225 How do I amend my application for certification?
1060.230 How do I select emission families?
1060.235 What emission testing must I perform for my application for a certificate of conformity?
1060.240 How do I demonstrate that my emission family complies with evaporative emission standards?
1060.250 What records must I keep?
1060.255 What decisions may EPA make regarding my certificate of conformity?

Subpart D—Production Verification Testing

1060.301 Manufacturer testing.
1060.310 Supplying products to EPA for testing.

Subpart E—In-Use Testing

1060.401 General Provisions.

Subpart F—Test Procedures

1060.501 General testing provisions.
1060.505 Other procedures.
1060.510 How do I test EPA Low-Emission Fuel Lines for permeation emissions?
1060.515 How do I test EPA Nonroad Fuel Lines and EPA Cold-Weather Fuel Lines for permeation emissions?
1060.520 How do I test fuel tanks for permeation emissions?
1060.521 How do I test fuel caps for permeation emissions?
1060.525 How do I test fuel systems for diurnal emissions?

Subpart G—Special Compliance Provisions

1060.601 How do the prohibitions of 40 CFR 1068.101 apply with respect to the requirements of this part?
1060.605 Exemptions from evaporative emission standards.
1060.610 Temporary exemptions for manufacturing and assembling equipment and fuel-system components.
1060.640 What special provisions apply to branded equipment?

Subpart H—Averaging, Banking, and Trading Provisions

1060.701 Applicability.
1060.705 How do I certify components to an emission level other than the standard under this part or use such components in my equipment?

Subpart I—Definitions and Other Reference Information

1060.801 What definitions apply to this part?
1060.805 What symbols, acronyms, and abbreviations does this part use?
1060.810 What materials does this part reference?
1060.815 What provisions apply to confidential information?
1060.820 How do I request a hearing?

1060.825 What reporting and recordkeeping requirements apply under this part?

AUTHORITY: 42 U.S.C. 7401–7671q.

SOURCE: 73 FR 59298, Oct. 8, 2008, unless otherwise noted.

Subpart A—Overview and Applicability

§ 1060.1 Which products are subject to this part's requirements?

(a) The standards and other requirements in this part 1060 apply to the fuel lines, fuel tanks, couplings and fittings, and fuel caps used or intended to be used in the following categories of new engines and equipment that are fueled with a volatile liquid fuel (such as gasoline, but not including diesel fuel), and to the equipment in which these components are installed, starting with the model years shown in Table 1 to this section:

(1) Compression-ignition engines we regulate under 40 CFR part 1039. This includes stationary compression-ignition engines we regulate under the provisions of 40 CFR part 1039, as indicated under 40 CFR part 60, subpart IIII. See the evaporative emission standards specified in 40 CFR 1048.105. These engines are considered to be Large SI engines for purposes of this part 1060.

(2) Marine compression-ignition engines we regulate under 40 CFR part 1042. See the evaporative emission standards specified in 40 CFR 1045.112. These engines are considered to be Marine SI engines for purposes of this part 1060.

(3) Marine SI engines we regulate under 40 CFR part 1045. See the evaporative emission standards specified in 40 CFR 1045.112.

(4) Large SI engines we regulate under 40 CFR part 1048. This includes stationary spark-ignition engines subject to standards under 40 CFR parts 1048 or 1054 as indicated in 40 CFR part 60, subpart JJJJ. See the evaporative emission standards specified in 40 CFR 1048.105.

(5) Recreational vehicles and engines we regulate under 40 CFR part 1051 (such as snowmobiles and off-highway motorcycles). This includes highway motorcycles subject to standards under 40 CFR part 1051 as indicated in 40 CFR part 86, subpart E since these motorcycles are considered to be recreational vehicles for purposes of this part 1060. See the evaporative emission standards specified in 40 CFR 1051.110.

(6) Small SI engines we regulate under 40 CFR part 1054. See the evaporative emission standards specified for handheld engines in 40 CFR 1054.110 and for nonhandheld engines in 40 CFR 1054.112.

(7) Portable marine fuel tanks and fuel lines associated with such fuel tanks must meet evaporative emission standards specified in 40 CFR 1045.112. Portable nonroad fuel tanks and fuel lines associated with such fuel tanks must also meet evaporative emission standards specified in 40 CFR 1045.112, whether or not they are used with marine vessels. Portable nonroad fuel tanks are considered to be portable marine fuel tanks for purposes of this part 1060.

(b) The regulations in this part 1060 apply for new replacement components used with any of the engines or equipment specified in paragraph (a) of this section as described in § 1060.601.

(c) Fuel caps are subject to evaporative emission standards at the point of installation on a fuel tank. If a fuel cap is certified for use with Marine SI engines or Small SI engines under the optional standards of § 1060.103, it is subject to all the requirements of this part 1060 as if these optional standards were mandatory.

(d) This part 1060 does not apply to any diesel-fueled engine or any other engine that does not use a volatile liquid fuel. In addition, this part does not apply to any engines or equipment in the following categories even if they use a volatile liquid fuel:

(1) Light-duty motor vehicles (see 40 CFR part 86).

(2) Heavy-duty motor vehicles and heavy-duty motor vehicle engines (see 40 CFR part 86). This part 1060 also does not apply to fuel systems for nonroad engines where such fuel systems are subject to part 86 because they are part of a heavy-duty motor vehicle.

(3) Aircraft engines (see 40 CFR part 87).

(4) Locomotives (see 40 CFR part 92 and 1033).

(5) Land-based nonroad diesel engines we regulate under 40 CFR part 89.

(6) Marine diesel engines we regulate under 40 CFR part 89, 94, or 1042.

(7) Land-based spark-ignition engines at or below 19 kW that we regulate under 40 CFR part 90. Note that there are provisions in 40 CFR part 90 that reference specific portions of this part 1060.

(8) Marine spark-ignition engines we regulate under 40 CFR part 91.

(e) This part 1060 does not apply for fuel lines made wholly of metal.

TABLE 1 TO § 1060.1—PART 1060 APPLICABILITY [A]

Equipment category or subcategory	Fuel line permeation	Tank permeation	Diurnal emissions	Running loss emissions
Marine SI—portable marine fuel tanks.	January 1, 2009 [b]	January 1, 2011	January 1, 2010	Not applicable.
Marine SI—personal watercraft.	January 1, 2009	Model year 2011	Model year 2010	Not applicable.
Marine SI—other vessels with installed fuel tanks.	January 1, 2009 [b]	Model year 2012	July 31, 2011	Not applicable.
Large SI	Model year 2007	Not applicable	Model year 2007 (includes tank permeation).	Model year 2007.
Recreational vehicles	Model year 2008	Model year 2008	Not applicable	Not applicable.
Small SI—handheld	Model year 2012 [c]	Model year 2010 [d]	Not applicable	Not applicable.
Small SI—Class I nonhandheld.	January 1, 2009	Model year 2012	Not applicable [e]	Model year 2012.
Small SI—Class II nonhandheld.	January 1, 2009	Model year 2011	Not applicable [e]	Model year 2011.

[a] Implementation is based on the date of manufacture of the equipment. Where we do not identify a specific date, the emission standards start to apply at the beginning of the model year.
[b] January 1, 2011 for primer bulbs. Standards phase in for under-cowl fuel lines on outboard engines, by length: 30% in 2010, 60% in 2011, 90% in 2012–2014, 100% in 2015.
[c] 2013 for small-volume emission families that do not include cold-weather fuel lines.
[d] 2011 for structurally integrated nylon fuel tanks and 2013 for all small-volume emission families.
[e] Manufacturers may optionally meet diurnal standards as specified in § 1060.105(e).

EFFECTIVE DATE NOTE: At 86 FR 34527, June 29, 2021, § 1060.1 was amended, effective July 29, 2021.

§ 1060.5 Do the requirements of this part apply to me?

The requirements of this part are generally addressed to the manufacturers that are subject to this part's requirements as described in paragraph (a) of this section. The term ''you'' generally means the manufacturer or manufacturers that are subject to these requirements. Paragraphs (b) through (e) of this section describe which manufacturers may or must certify their products. (Note: § 1060.601(f) allows the certification responsibility to be delegated in certain circumstances.)

(a) *Overall responsibilities.* Manufacturers of the engines, equipment, and fuel-system components described in § 1060.1 are subject to the standards and other requirements of this part 1060 except as otherwise noted. Multiple manufacturers may be subject to these standards and other requirements. For example, when a Small SI equipment manufacturer buys fuel line manufactured by another person and installs them in its equipment, both the equipment manufacturer and the fuel line manufacturer are subject to the standards and other requirements of this part. The following provisions apply in such cases:

(1) Each person meeting the definition of manufacturer for a product that is subject to the standards and other requirements of this part must comply with such requirements. However, if one person complies with a specific requirement for a given product, then all manufacturers are deemed to have complied with that specific requirement. For example, if a Small SI equipment manufacturer uses fuel lines manufactured and certified by another company, the equipment manufacturer is not required to obtain a certificate with respect to the fuel line emission standards. Such an equipment manufacturer remains subject to the standards and other requirements of this

part. However, where a provision requires a specific manufacturer to comply with certain provisions, this paragraph (a) does not change or modify such a requirement. For example, this paragraph (a) does not allow you to rely on another company to certify instead of you if we specifically require you to certify.

(2) The requirements of subparts C and D of this part apply to the manufacturer that obtains the certificate of conformity. Other manufacturers are required to comply with the requirements of subparts C and D of this part only when we send notification. In our notification, we will specify a reasonable period for complying with the requirements identified in the notice. See §1060.601 for the applicability of 40 CFR part 1068 to these other manufacturers.

(3) Certificate holders are responsible for meeting all applicable requirements even if other manufacturers are also subject to those requirements.

(b) *Marine SI.* Certify vessels, engines, and fuel-system components as follows:

(1) Component manufacturers must certify their fuel lines and fuel tanks intended for installation with Marine SI engines and vessels under this part 1060, except as allowed by §1060.601(f). This includes permeation and diurnal emission standards.

(2) Vessel manufacturers are subject to all the requirements of this part 1060 that apply to Marine SI engines and fuel systems. However, they must certify to the emission standards specified in §§1060.102 through 1060.105 only if one or more of the following conditions apply:

(i) Vessel manufacturers must certify fuel system components they install in their vessels if the components are not certified to meet all applicable evaporative emission standards, including both permeation and diurnal standards. This would include vessel manufacturers that make their own fuel tanks. Vessel manufacturers would need to act as component manufacturers to certify under this part 1060.

(ii) Vessel manufacturers must certify their vessels only if they intend to generate or use evaporative emission credits. Vessel manufacturers would certify under part 40 CFR part 1045 using the emission-credit provisions in subpart H of that part to demonstrate compliance with the emission standard.

(3) Engine manufacturers must meet all the requirements of this part 1060 that apply to vessel manufacturers for all fuel-system components they install on their engines. For example, engine manufacturers that install undercowl fuel lines and fuel tanks must comply with the requirements specified for vessel manufacturers with respect to those components.

(c) *Large SI.* Certify engines, equipment, and fuel-system components as follows:

(1) Engine manufacturers must certify their engines under 40 CFR part 1048.

(2) Equipment manufacturers and component manufacturers may certify fuel lines and fuel tanks intended for use with Large SI engines under this part 1060.

(d) *Recreational vehicles.* Certify vehicles, engines and fuel-system components as follows:

(1) Vehicle manufacturers must certify their vehicles under 40 CFR part 1051.

(2) Engine manufacturers must meet all the requirements of 40 CFR part 1051 that apply to vehicle manufacturers for all fuel-system components they install on their engines. For example, engine manufacturers that install fuel-line segments on the engines they ship to vehicle manufacturers must comply with the requirements specified for equipment manufacturers with respect to those components.

(3) Component manufacturers may certify fuel lines and fuel tanks intended for recreational vehicles under this part 1060.

(e) *Small SI.* Certify engines, equipment, and fuel-system components as follows:

(1) Component manufacturers must certify their fuel lines and fuel tanks intended for Small SI engines and equipment under this part 1060, except as allowed by §1060.601(f).

(2) Equipment manufacturers must certify fuel system components they

install in their equipment if the components are not certified to meet applicable evaporative emission standards. Equipment manufacturers would need to act as component manufacturers to certify fuel-system components under this part 1060.

(3) Engine manufacturers must meet all the requirements of this part 1060 that apply to equipment manufacturers for all fuel-system components they install on their engines. Engine manufacturers that produce Small SI engines with complete fuel systems are considered the equipment manufacturers for those engines under this part 1060.

(4) Equipment manufacturers must certify their equipment and are subject to all the requirements of this part 1060; however, this does not apply for equipment using portable nonroad fuel tanks.

(f) *Summary of certification responsibilities.* Tables 1 through 3 of this section summarize the certification responsibilities for different kinds of manufacturers as described in paragraphs (b) through (e) of this section. The term ''No'' as used in the tables means that a manufacturer is not required to obtain a certificate of conformity under paragraphs (b) through (e) of this section. In situations where multiple manufacturers are subject to the standards and other requirements of this part, such a manufacturer must nevertheless certify if the manufacturer who is required to certify under paragraphs (b) through (e) of this section fails to obtain a certificate of conformity.

TABLE 1 TO § 1060.5—SUMMARY OF ENGINE MANUFACTURER EVAPORATIVE CERTIFICATION RESPONSIBILITIES

Equipment type	Is the engine manufacturer required to certify for evaporative emission standards? [a]	Code of Federal Regulations Cite for Certification
Marine SI	No.	
Large SI	Yes	40 CFR part 1048.
Recreational vehicles	No.	
Small SI	No, unless engines are sold with complete fuel systems	40 CFR part 1060.

[a] Fuel lines and fuel tanks that are attached to or sold with engines must be covered by a certificate of conformity.

TABLE 2 TO § 1060.5—SUMMARY OF EQUIPMENT MANUFACTURER EVAPORATIVE CERTIFICATION RESPONSIBILITIES

Equipment type	Is the equipment manufacturer required to certify for evaporative emission standards?	Code of Federal Regulations Cite for Certification
Marine SI	Yes, but only if vessel manufacturers install uncertified fuel lines or fuel tanks, or they intend to generate or use evaporative emission credits.	40 CFR part 1060.[a]
Large SI	Allowed but not required	40 CFR part 1060.
Recreational vehicles	Yes, even if vehicle manufacturers install certified components	40 CFR part 1051.
Small SI	Yes, unless the equipment uses portable nonroad fuel tanks	40 CFR part 1060.[a]

[a] See the exhaust standard-setting part for provisions related to generating or using evaporative emission credits.

TABLE 3 OF § 1060.5—SUMMARY OF COMPONENT MANUFACTURER CERTIFICATION RESPONSIBILITIES

Equipment type	Is the component manufacturer required to certify fuel lines and fuel tanks?	Code of Federal Regulations Cite for Certification
Marine SI	Yes, including portable marine fuel tanks and associated fuel lines [a].	40 CFR part 1060.
Large SI	Allowed but not required	40 CFR part 1060.
Recreational vehicles	Allowed but not required	40 CFR part 1060.
Small SI	Yes [a]	40 CFR part 1060.

[a] See § 1060.601 for an allowance to make contractual arrangements with engine or equipment manufacturers instead of certifying.

[73 FR 59298, Oct. 8, 2008, as amended at 80 FR 9115, Feb. 19, 2015]

EFFECTIVE DATE NOTE: At 86 FR 34528, June 29, 2021, § 1060.5 was amended, effective July 29, 2021.

§ 1060.10 How is this part organized?

This part 1060 is divided into the following subparts:

(a) Subpart A of this part defines the applicability of part 1060 and gives an overview of regulatory requirements.

(b) Subpart B of this part describes the emission standards and other requirements that must be met to certify equipment or components under this part. Note that § 1060.110 discusses certain interim requirements and compliance provisions that apply only for a limited time.

(c) Subpart C of this part describes how to apply for a certificate of conformity.

(d) Subpart D of this part describes the requirements related to verifying that products are being produced as described in an approved application for certification.

(e) Subpart E of this part describes the requirements related to verifying that products are meeting the standards in use.

(f) Subpart F of this part describes how to measure evaporative emissions.

(g) Subpart G of this part and 40 CFR part 1068 describe requirements, prohibitions, and other provisions that apply to manufacturers, owners, operators, and all others.

(h) Subpart H of this part describes how to certify your equipment or components for inclusion in an emission averaging program allowed by an exhaust standard-setting part.

(i) Subpart I of this part contains definitions and other reference information.

§ 1060.15 Do any other CFR parts apply to me?

(a) There is a separate part of the CFR that includes exhaust emission requirements for each particular application, as described in § 1060.1(a). We refer to these as the exhaust standard-setting parts. In cases where an exhaust standard-setting part includes evaporative requirements, apply this part 1060 as specified in the exhaust standard-setting part, as follows:

(1) The requirements in the exhaust standard-setting part may differ from the requirements in this part. In cases where it is not possible to comply with both the exhaust standard-setting part and this part, you must comply with the requirements in the exhaust standard-setting part. The exhaust standard-setting part may also allow you to deviate from the procedures of this part for other reasons.

(2) The exhaust standard-setting parts may reference some sections of this part 1060 or may allow or require certification under this part 1060. See the exhaust standard-setting parts to determine what provisions of this part 1060 apply for these equipment types.

(b) The requirements and prohibitions of part 1068 of this chapter apply to everyone, including anyone who manufactures, imports, owns, operates, or services any of the fuel systems subject to this part 1060. Part 1068 of this chapter describes general provisions, including the following areas:

(1) Prohibited acts and penalties for engine manufacturers, equipment manufacturers, and others.

(2) Exclusions and exemptions for certain products.

(3) Importing products.

(4) Defect reporting and recall.

(5) Procedures for hearings.

(c) Other parts of this chapter apply if referenced in this part.

§ 1060.30 Submission of information.

(a) This part includes various requirements to record data or other information. Refer to § 1060.825, 40 CFR 1068.25, and the exhaust standard-setting part regarding recordkeeping requirements. If recordkeeping requirements are not specified, store these records in any format and on any media and keep them readily available for one year after you send an associated application for certification, or one year after you generate the data if they do not support an application for certification. You must promptly send us organized, written records in English if we ask for them. We may review them at any time.

(b) The regulations in § 1060.255 and 40 CFR 1068.101 describe your obligation to report truthful and complete information and the consequences of failing to meet this obligation. This includes information not related to certification.

(c) Send all reports and requests for approval to the Designated Compliance Officer (see § 1060.801).

(d) Any written information we require you to send to or receive from another company is deemed to be a required record under this section. Such records are also deemed to be submissions to EPA. We may require you to send us these records whether or not you are a certificate holder.

EFFECTIVE DATE NOTE: At 86 FR 34528, June 29, 2021, § 1060.30 was revised, effective July 29, 2021.

Subpart B—Emission Standards and Related Requirements

§ 1060.101 What evaporative emission requirements apply under this part?

Products subject to this part must meet emission standards and related requirements as follows:

(a) Section 1060.102 describes permeation emission control requirements for fuel lines.

(b) Section 1060.103 describes permeation emission control requirements for fuel tanks.

(c) Section 1060.104 describes running loss emission control requirements for fuel systems.

(d) Section 1060.105 describes diurnal emission control requirements for fuel tanks.

(e) The following general requirements apply for components and equipment subject to the emission standards in §§ 1060.102 through 1060.105:

(1) *Adjustable parameters.* Components or equipment with adjustable parameters must meet all the requirements of this part for any adjustment in the physically adjustable range.

(2) *Prohibited controls.* The following controls are prohibited:

(i) For anyone to design, manufacture, or install emission control systems so they cause or contribute to an unreasonable risk to public health, welfare, or safety while operating.

(ii) For anyone to design, manufacture, or install emission control systems with features that disable, deactivate, or bypass the emission controls, either actively or passively. For example, you may not include a manual vent that the operator can open to bypass emission controls. You may ask us to allow such features if needed for safety reasons or if the features are fully functional during emission tests described in subpart F of this part.

(3) *Emission credits.* Equipment manufacturers are allowed to comply with the emission standards in this part using evaporative emission credits only if the exhaust standard-setting part explicitly allows it for evaporative emissions. See the exhaust standard-setting part and subpart H of this part for information about complying with evaporative emission credits. For equipment manufacturers to generate or use evaporative emission credits, components must be certified to a family emission limit, which serves as the standard for those components.

(f) This paragraph (f) specifies requirements that apply to equipment manufacturers subject to requirements under this part, whether or not they are subject to and certify to any of the emission standards in §§ 1060.102 through 1060.105. Equipment manufacturers meeting these requirements will be deemed to be certified as in conformity with the requirements of this paragraph (f) without submitting an application for certification, as follows:

(1) *Fuel caps, vents, and carbon canisters.* You are responsible for ensuring that proper caps and vents are installed on each new piece of equipment that is subject to emission standards under this part. The following particular requirements apply to equipment that is subject to running loss or diurnal emission standards, including portable marine fuel tanks:

(i) All equipment must have a tethered fuel cap. Fuel caps must also include a visual, audible, or other physical indication that they have been properly sealed.

(ii) You may not add vents unless they are specified in or allowed by the applicable certificates of conformity.

(iii) If the emission controls rely on carbon canisters, they must be installed in a way that prevents exposing the carbon to water or liquid fuel.

(2) *Fuel-line fittings.* The following requirements apply for fuel-line fittings that will be used with fuel lines that

must meet permeation emission standards:

(i) Use good engineering judgment to ensure that all fuel-line fittings will remain securely connected to prevent fuel leakage throughout the useful life of the equipment.

(ii) Fuel lines that are intended to be detachable (such as those for portable marine fuel tanks) must be self-sealing when detached from the fuel tank or engine.

(3) *Refueling*. For any equipment using fuel tanks that are subject to diurnal or permeation emission standards under this part, you must design and build your equipment such that operators can reasonably be expected to fill the fuel tank without spitback or spillage during the refueling event. The following examples illustrate designs that meet this requirement:

(i) Equipment that is commonly refueled using a portable gasoline container should have a fuel tank inlet that is larger than a typical dispensing spout. The fuel tank inlet should be located so the operator can place the nozzle directly in the fuel tank inlet and see the fuel level in the tank while pouring the fuel from an appropriately sized refueling container (either through the tank wall or the fuel tank inlet). We will deem you to comply with the requirements of this paragraph (f)(3)(i) if you design your equipment to meet applicable industry standards related to fuel tank inlets.

(ii) Marine SI vessels with a filler neck extending to the side of the boat should be designed for automatic fuel shutoff. Alternatively, the filler neck should be designed such that the orientation of the filler neck allows dispensed fuel that collects in the filler neck to flow back into the fuel tank. A filler neck that ends with a horizontal or nearly horizontal segment at the opening where fuel is dispensed would not be an acceptable design.

(g) Components and equipment must meet the standards specified in this part throughout the applicable useful life. Where we do not specify procedures for demonstrating the durability of emission controls, use good engineering judgment to ensure that your products will meet the standards throughout the useful life. The useful life is one of the following values:

(1) The useful life in years specified for the components or equipment in the exhaust standard-setting part.

(2) The useful life in years specified for the engine in the exhaust standard-setting part if the exhaust standards are specified for the engine rather than the equipment and there is no useful life given for components or equipment.

(3) Five years if no useful life is specified in years for the components, equipment, or engines in the exhaust standard-setting part.

§ 1060.102 What permeation emission control requirements apply for fuel lines?

(a) Nonmetal fuel lines must meet permeation requirements as follows:

(1) Marine SI fuel lines, including fuel lines associated with outboard engines or portable marine fuel tanks, must meet the permeation requirements in this section.

(2) Large SI fuel lines must meet the permeation requirements specified in 40 CFR 1048.105.

(3) Fuel lines for recreational vehicles must meet the permeation requirements specified in 40 CFR 1051.110 or in this section.

(4) Small SI fuel lines must meet the permeation requirements in this section, unless they are installed in equipment certified to meet diurnal emission standards under § 1060.105(e).

(b) Different categories of nonroad equipment are subject to different requirements with respect to fuel line permeation. Fuel lines are classified based on measured emissions over the test procedure specified for the class.

(c) The regulations in 40 CFR part 1048 require that fuel lines used with Large SI engines must meet the standards for EPA Low-Emission Fuel Lines. The regulations in 40 CFR part 1054 require that fuel lines used with handheld Small SI engines installed in cold-weather equipment must meet the standards for EPA Cold-Weather Fuel Lines. Unless specified otherwise in this subchapter U, fuel lines used with all other engines and equipment subject to the provisions of this part 1060, including fuel lines associated with

outboard engines or portable marine fuel tanks, must meet the standards for EPA Nonroad Fuel Lines.

(d) The following standards apply for each fuel line classification:

(1) EPA Low-Emission Fuel Lines must have permeation emissions at or below 10 g/m²/day when measured according to the test procedure described in § 1060.510. Fuel lines that comply with this emission standard are deemed to comply with all the emission standards specified in this section.

(2) EPA Nonroad Fuel Lines must have permeation emissions at or below 15 g/m²/day when measured according to the test procedure described in § 1060.515.

(3) EPA Cold-Weather Fuel Lines must meet the following permeation emission standards when measured according to the test procedure described in § 1060.515:

TABLE 1 TO § 1060.102—PERMEATION STANDARDS FOR EPA COLD-WEATHER FUEL LINES

Model year	Standard (g/m²/day)
2012	290
2013	275
2014	260
2015	245
2016 and later	225

(e) You may certify fuel lines as follow:

(1) You may certify straight-run fuel lines as sections of any length.

(2) You may certify molded fuel lines in any configuration representing your actual production, subject to the provisions for selecting a worst-case configuration in § 1060.235(b).

(3) You may certify fuel line assemblies as aggregated systems that include multiple sections of fuel line with connectors and fittings. For example, you may certify fuel lines for portable marine fuel tanks as assemblies of fuel hose, primer bulbs, and self-sealing end connections. The length of such an assembly must not be longer than a typical in-use installation and must always be less than 2.5 meters long. You may also certify primer bulbs separately. The standard applies with respect to the total permeation emissions divided by the wetted internal surface area of the assembly. Where it is not practical to determine the actual internal surface area of the assembly, you may assume that the internal surface area per unit length of the assembly is equal to the ratio of internal surface area per unit length of the hose section of the assembly.

[73 FR 59298, Oct. 8, 2008, as amended at 74 FR 8426, Feb. 24, 2009]

§ 1060.103 What permeation emission control requirements apply for fuel tanks?

(a) Fuel tanks must meet permeation requirements as follows:

(1) Marine SI fuel tanks, including engine-mounted fuel tanks and portable marine fuel tanks, must meet the permeation requirements in this section.

(2) Large SI fuel tanks must meet diurnal emission standards as specified in § 1060.105, which includes measurement of permeation emissions. No separate permeation standard applies.

(3) Fuel tanks for recreational vehicles must meet the permeation requirements specified in 40 CFR 1051.110 or in this section.

(4) Small SI fuel tanks must meet the permeation requirements in this section unless they are installed in equipment certified to meet diurnal emission standards under § 1060.105(e).

(b) Permeation emissions from fuel tanks may not exceed 1.5 g/m²/day when measured at a nominal temperature of 28 °C with the test procedures for tank permeation in § 1060.520. You may also choose to meet a standard of 2.5 g/m²/day if you perform testing at a nominal temperature of 40 °C under § 1060.520(d).

(c) The exhaust standard-setting part may allow for certification of fuel tanks to a family emission limit for calculating evaporative emission credits as described in subpart H of this part instead of meeting the emission standards in this section.

(d) For purposes of this part, fuel tanks do not include fuel lines that are subject to § 1060.102, petcocks designed for draining fuel, grommets used with fuel lines, or grommets used with other hose or tubing excluded from the definition of ''fuel line.'' Fuel tanks include other fittings (such as fuel caps, gaskets, and O-rings) that are directly mounted to the fuel tank.

(e) Fuel caps may be certified separately relative to the permeation emission standard in paragraph (b) of this section using the test procedures specified in § 1060.521. Fuel caps certified alone do not need to meet the emission standard. Rather, fuel caps would be certified with a Family Emission Limit, which is used for demonstrating that fuel tanks meet the emission standard as described in § 1060.520(b)(5). For the purposes of this paragraph (e), gaskets or O-rings that are produced as part of an assembly with the fuel cap are considered part of the fuel cap.

(f) Metal fuel tanks that meet the permeation criteria in § 1060.240(d)(2) or use certified nonmetal fuel caps will be deemed to be certified as in conformity with the requirements of this section without submitting an application for certification.

[73 FR 59298, Oct. 8, 2008, as amended at 74 FR 8427, Feb. 24, 2009; 75 FR 23026, Apr. 30, 2010]

§ 1060.104 What running loss emission control requirements apply?

(a) Engines and equipment must meet running loss requirements as follows:

(1) Marine SI engines and vessels are not subject to running loss emission standards.

(2) Large SI engines and equipment must prevent fuel boiling during operation as specified in 40 CFR 1048.105.

(3) Recreational vehicles are not subject to running loss emission standards.

(4) Nonhandheld Small SI engines and equipment that are not used in wintertime equipment must meet running loss requirements described in this section. Handheld Small SI engines and equipment are not subject to running loss emission standards.

(b) You must demonstrate control of running loss emissions in one of the following ways if your engines or equipment are subject to the requirements of this section:

(1) Route running loss emissions into the engine intake system so fuel vapors vented from the tank during engine operation are combusted in the engine. This may involve routing vapors through a carbon canister. If another company has certified the engine with respect to exhaust emissions, state in your application for certification that you have followed the engine manufacturer's installation instructions.

(2) Use a fuel tank that remains sealed under normal operating conditions. This may involve a bladder or other means to prevent pressurized fuel tanks.

(3) Get an approved Executive Order from the California Air Resources Board showing that your system meets applicable running loss standards in California.

(c) If you are subject to both running loss and diurnal emission standards, use good engineering judgment to ensure that the emission controls are compatible.

EFFECTIVE DATE NOTE: At 86 FR 34528, June 29, 2021, § 1060.104 was amended, effective July 29, 2021.

§ 1060.105 What diurnal requirements apply for equipment?

(a) Fuel tanks must meet diurnal emission requirements as follows:

(1) Marine SI fuel tanks, including engine-mounted fuel tanks and portable marine fuel tanks, must meet the requirements related to diurnal emissions specified in this section.

(2) Large SI fuel tanks must meet the requirements related to diurnal emissions specified in 40 CFR 1048.105.

(3) Recreational vehicles are not subject to diurnal emission standards.

(4) Small SI fuel tanks are not subject to diurnal emission standards, except as specified in paragraph (e) of this section.

(b) Diurnal emissions from Marine SI fuel tanks may not exceed 0.40 g/gal/day when measured using the test procedures specified in § 1060.525 for general fuel temperatures. An alternative standard of 0.16 g/gal/day applies for fuel tanks installed in nontrailerable boats when measured using the corresponding fuel temperature profile in § 1060.525. Portable marine fuel tanks are not subject to the requirements of this paragraph (b), but must instead comply with the requirements of paragraphs (c) and (d) of this section.

(c) Portable marine fuel tanks and associated fuel-system components must meet the following requirements:

(1) They must be self-sealing when detached from the engines. The tanks

may not vent to the atmosphere when attached to an engine. An integrated or external manually activated device may be included in the fuel tank design to temporarily relieve pressure before refueling or connecting the fuel tank to the engine. However, the default setting for such a vent must be consistent with the requirement in paragraph (c)(2) of this section.

(2) They must remain sealed up to a positive pressure of 24.5 kPa (3.5 psig); however, they may contain air inlets that open when there is a vacuum pressure inside the tank. Such fuel tanks may not contain air outlets that vent to the atmosphere at pressures below 34.5 kPa (5.0 psig).

(d) Detachable fuel lines that are intended for use with portable marine fuel tanks must have connection points that are self-sealing when not attached to the engine or fuel tank.

(e) Manufacturers of nonhandheld Small SI equipment may optionally meet the diurnal emission standards adopted by the California Air Resources Board in the Final Regulation Order, Article 1, Chapter 15, Division 3, Title 13, California Code of Regulations, July 26, 2004 (incorporated by reference in § 1060.810). To meet this requirement, equipment must be certified to the performance standards specified in Title 13 CCR § 2754(a) based on the applicable requirements specified in CP–902 and TP–902, including the requirements related to fuel caps in Title 13 CCR § 2756. Equipment certified under this paragraph (e) does not need to use fuel lines or fuel tanks that have been certified separately. Equipment certified under this paragraph (e) are subject to all the referenced requirements as if these specifications were mandatory.

(f) The following general provisions apply for controlling diurnal emissions:

(1) If you are subject to both running loss and diurnal emission standards, use good engineering judgment to ensure that the emission controls are compatible.

(2) You may not use diurnal emission controls that increase the occurrence of fuel spitback or spillage during in-use refueling. Also, if you use a carbon canister, you must incorporate design features that prevent liquid gasoline from reaching the canister during refueling or as a result of fuel sloshing or fuel expansion.

(3) You must meet the following provisions from ABYC H–25, July 2010 (incorporated by reference in § 1060.810) with respect to portable marine fuel tanks:

(i) Provide information related to the pressure relief method (25.8.2.1 and 25.8.2.1.1).

(ii) Perform system testing (25.10 through 25.10.5).

[73 FR 59298, Oct. 8, 2008, as amended at 74 FR 8427, Feb. 24, 2009; 75 FR 56482, Sept. 16, 2010]

EFFECTIVE DATE NOTE: At 86 FR 34528, June 29, 2021, § 1060.105 was amended, effective July 29, 2021.

§ 1060.120 What emission-related warranty requirements apply?

(a) *General requirements.* The certifying manufacturer must warrant to the ultimate purchaser and each subsequent purchaser that the new nonroad equipment, including its evaporative emission control system, meets two conditions:

(1) It is designed, built, and equipped so it conforms at the time of sale to the ultimate purchaser with the requirements of this part.

(2) It is free from defects in materials and workmanship that may keep it from meeting these requirements.

(b) *Warranty period.* Your emission-related warranty must be valid for at least two years from the point of first retail sale.

(c) *Components covered.* The emission-related warranty covers all components whose failure would increase the evaporative emissions, including those listed in 40 CFR part 1068, Appendix I, and those from any other system you develop to control emissions. Your emission-related warranty does not cover components whose failure would not increase evaporative emissions.

(d) *Relationships between manufacturers.* (1) The emission-related warranty required for equipment manufacturers that certify equipment must cover all specified components even if another company produces the component.

(2) Where an equipment manufacturer fulfills a warranty obligation for a given component, the component

manufacturer is deemed to have also met that obligation.

EFFECTIVE DATE NOTE: At 86 FR 34528, June 29, 2021, § 1060.120 was amended, effective July 29, 2021.

§ 1060.125 What maintenance instructions must I give to buyers?

Give ultimate purchasers written instructions for properly maintaining and using the emission control system. You may not specify any maintenance more frequently than once per year. For example, if you produce cold-weather equipment that requires replacement of fuel cap gaskets or O-rings, provide clear instructions to the ultimate purchaser, including the required replacement interval.

§ 1060.130 What installation instructions must I give to equipment manufacturers?

(a) If you sell a certified fuel-system component for someone else to install in equipment, give the installer instructions for installing it consistent with the requirements of this part.

(b) Make sure the instructions have the following information:

(1) Include the heading: ''Emission-related installation instructions''.

(2) State: ''Failing to follow these instructions when installing [IDENTIFY COMPONENT(S)] in a piece of nonroad equipment violates federal law (40 CFR 1068.105(b)), subject to fines or other penalties as described in the Clean Air Act.''

(3) Describe any limits on the range of applications needed to ensure that the component operates consistently with your application for certification. For example:

(i) For fuel tanks sold without fuel caps, you must specify the requirements for the fuel cap, such as the allowable materials, thread pattern, how it must seal, etc. You must also include instructions to tether the fuel cap as described in § 1060.101(f)(1) if you do not sell your fuel tanks with tethered fuel caps.

(ii) If your fuel lines do not meet permeation standards specified in § 1060.102 for EPA Low-Emission Fuel Lines, tell equipment manufacturers not to install the fuel lines with Large SI engines that operate on gasoline or another volatile liquid fuel.

(4) Describe instructions for installing components so they will operate according to design specifications in your application for certification. Specify sufficient detail to ensure that the equipment will meet the applicable standards when your component is installed.

(5) If you certify a component with a family emission limit above the emission standard, be sure to indicate that the equipment manufacturer must have a source of credits to offset the higher emissions. Also indicate the applications for which the regulations allow for compliance using evaporative emission credits.

(6) Instruct the equipment manufacturers that they must comply with the requirements of § 1060.202.

(c) You do not need installation instructions for components you install in your own equipment.

(d) Provide instructions in writing or in an equivalent format. For example, you may post instructions on a publicly available Web site for downloading or printing, provided you keep a copy of these instructions in your records. If you do not provide the instructions in writing, explain in your application for certification how you will ensure that each installer is informed of the installation requirements.

EFFECTIVE DATE NOTE: At 86 FR 34528, June 29, 2021, § 1060.130 was amended, effective July 29, 2021.

§ 1060.135 How must I label and identify the engines and equipment I produce?

The labeling requirements of this section apply for all equipment manufacturers and for engine manufacturers that certify with respect to evaporative emissions. See § 1060.137 for the labeling requirements that apply separately for fuel lines, fuel tanks, and other fuel-system components.

(a) You must affix a permanent and legible label identifying each engine or piece of equipment before introducing it into U.S. commerce. The label must be—

(1) Attached in one piece so it is not removable without being destroyed or defaced.

(2) Secured to a part of the engine or equipment needed for normal operation and not normally requiring replacement.

(3) Durable and readable for the equipment's entire life.

(4) Written in English.

(5) Readily visible in the final installation. It may be under a hinged door or other readily opened cover. It may not be hidden by any cover attached with screws or any similar designs. Labels on marine vessels (except personal watercraft) must be visible from the helm.

(b) If you hold a certificate for your engine or equipment with respect to evaporative emissions, the engine or equipment label specified in paragraph (a) of this section must—

(1) Include the heading ''EMISSION CONTROL INFORMATION''.

(2) Include your corporate name and trademark. You may identify another company and use its trademark instead of yours if you comply with the provisions of § 1060.640.

(3) State the date of manufacture [MONTH and YEAR] of the equipment; however, you may omit this from the label if you stamp or engrave it on the equipment.

(4) State: ''THIS EQUIPMENT [or VEHICLE or BOAT] MEETS U.S. EPA EVAP STANDARDS.''

(5) Identify the certified fuel-system components installed on the equipment as described in this paragraph (b)(5). Establish a component code for each certified fuel-system component, including those certified by other companies. You may use part numbers, certification numbers, or any other unique code that you or the certifying component manufacturer establish. This identifying information must correspond to printing or other labeling on each certified fuel-system component, whether you or the component manufacturer certifies the individual component. You may identify multiple part numbers if your equipment design might include an option to use more than one component design (such as from multiple component manufacturers). Use one of the following methods to include information on the label that identifies certified fuel-system components:

(i) Use the component codes to identify each certified fuel-system component on the label specified in this paragraph (b).

(ii) Identify the emission family on the label using EPA's standardized designation or an abbreviated equipment code that you establish in your application for certification. Equipment manufacturers that also certify their engines with respect to exhaust emissions may use the same emission family name for both exhaust and evaporative emissions. If you use the provisions of this paragraph (b)(5)(ii), you must identify all the certified fuel-system components and the associated component codes in your application for certification. In this case the label specified in this paragraph (b) may omit the information related to specific fuel-system components.

(c) If you produce equipment without certifying with respect to evaporative emissions, the equipment label specified in paragraph (a) of this section must—

(1) State: ''MEETS U.S. EPA EVAP STANDARDS USING CERTIFIED COMPONENTS.''

(2) Include your corporate name.

(d) You may add information to the emission control information label as follows:

(1) You may identify other emission standards that the engine meets or does not meet (such as California standards). You may include this information by adding it to the statement we specify or by including a separate statement.

(2) You may add other information to ensure that the engine will be properly maintained and used.

(3) You may add appropriate features to prevent counterfeit labels. For example, you may include the engine's unique identification number on the label.

(e) Anyone subject to the labeling requirements in this part 1060 may ask us to approve modified labeling requirements if it is necessary or appropriate.

We will approve the request if the alternate label is consistent with the requirements of this part.

[73 FR 59298, Oct. 8, 2008, as amended at 75 FR 23026, Apr. 30, 2010]

EFFECTIVE DATE NOTE: At 86 FR 34529, June 29, 2021, § 1060.135 was amended, effective July 29, 2021.

§ 1060.137 How must I label and identify the fuel-system components I produce?

The requirements of this section apply for manufacturers of fuel-system components subject to emission standards under this part 1060. However, these requirements do not apply if you produce fuel-system components that will be covered by a certificate of conformity from another company under § 1060.601(f). These requirements also do not apply for components you certify if you also certify the equipment in which the component is installed and meet the labeling requirements in § 1060.135.

(a) Label the components identified in this paragraph (a), unless the components are too small to be properly labeled. Unless we approve otherwise, we consider parts large enough to be properly labeled if they have space for 12 characters in six-point font (approximately 2 mm × 12 mm). For these small parts, you may omit the label as long as you identify those part numbers in your maintenance and installation instructions.

(1) All fuel tanks, except for metal fuel tanks that are deemed certified under § 1060.103(f).

(2) Fuel lines. This includes primer bulbs unless they are excluded from the definition of ''fuel line'' under the standard-setting part. Label primer bulbs separately.

(3) Carbon canisters.

(4) Fuel caps, as described in this paragraph (a)(4). Fuel caps must be labeled if they are separately certified under § 1060.103 or if the diurnal control system requires that the fuel tank hold pressure. Fuel caps must also be labeled if they are mounted directly on the fuel tank, unless the fuel tank is certified based on a worst-case fuel cap.

(5) Replaceable pressure-relief assemblies. This does not apply if the component is integral to the fuel tank or fuel cap.

(6) Other components we determine to be critical to the proper functioning of evaporative emission controls.

(b) Label your certified fuel-system components at the time of manufacture. The label must be—

(1) Attached so it is not removable without being destroyed or defaced. This may involve printing directly on the product. For molded products, you may use the mold to apply the label.

(2) Durable and readable for the equipment's entire life.

(3) Written in English.

(c) Except as specified in paragraph (d) of this section, you must create the label specified in paragraph (b) of this section as follows:

(1) Include your corporate name. You may identify another company instead of yours if you comply with the provisions of § 1054.640.

(2) Include EPA's standardized designation for the emission family.

(3) State: ''EPA COMPLIANT''.

(4) Fuel tank labels must identify the FEL, if applicable.

(5) Fuel line labels must identify the applicable permeation level. This may involve any of the following approaches:

(i) Identify the applicable numerical emission standard (such as 15 $g/m^2/day$).

(ii) Identify the applicable emission standards using EPA classifications (such as EPA Nonroad Fuel Lines).

(iii) Identify the applicable industry standard specification (such as SAE J30 R12).

(6) Fuel line labels must be continuous, with no more than 12 inches before repeating. We will consider labels to be continuous if the space between repeating segments is no longer than that of the repeated information. You may add a continuous stripe or other pattern to help identify the particular type or grade of your products.

(d) You may create an abbreviated label for your components. Such a label may rely on codes to identify the component. The code must at a minimum identify the certification status, your corporate name, and the emission family. For example, XYZ Manufacturing may label its fuel lines as ''EPA–XYZ–

A15'' to designate that their ''A15'' family was certified to meet EPA's 15 g/m^2/day standard. If you do this, you must describe the abbreviated label in your application for certification and identify all the associated information specified in paragraph (c) of this section.

(e) You may ask us to approve modified labeling requirements in this section as described in § 1060.135(e).

[73 FR 59298, Oct. 8, 2008, as amended at 75 FR 23026, Apr. 30, 2010]

EFFECTIVE DATE NOTE: At 86 FR 34529, June 29, 2021, § 1060.137 was amended, effective July 29, 2021.

Subpart C—Certifying Emission Families

§ 1060.201 What are the general requirements for obtaining a certificate of conformity?

Manufacturers of engines, equipment, or fuel-system components may need to certify their products with respect to evaporative emission standards as described in §§ 1060.1 and 1060.601. See § 1060.202 for requirements related to certifying with respect to the requirements specified in § 1060.101(f). The following general requirements apply for obtaining a certificate of conformity:

(a) You must send us a separate application for a certificate of conformity for each emission family. A certificate of conformity for equipment is valid starting with the indicated effective date but it is not valid for any production after December 31 of the model year for which it is issued. No certificate will be issued after December 31 of the model year. A certificate of conformity for a component is valid starting with the indicated effective date but it is not valid for any production after the end of the *production period* for which it is issued.

(b) The application must contain all the information required by this part and must not include false or incomplete statements or information (see § 1060.255).

(c) We may ask you to include less information than we specify in this subpart as long as you maintain all the information required by § 1060.250. For example, equipment manufacturers might use only components that are certified by other companies to meet applicable emission standards, in which case we would not require submission of emission data already submitted by the component manufacturer.

(d) You must use good engineering judgment for all decisions related to your application (see 40 CFR 1068.5).

(e) An authorized representative of your company must approve and sign the application.

(f) See § 1060.255 for provisions describing how we will process your application.

(g) We may specify streamlined procedures for small-volume equipment manufacturers.

§ 1060.202 What are the certification requirements related to the general standards in § 1060.101?

Equipment manufacturers must ensure that their equipment is certified with respect to the general standards specified in § 1060.101(f) as follows:

(a) If § 1060.5 requires you to certify your equipment to any of the emission standards specified in §§ 1060.102 through 1060.105, describe in your application for certification how you will meet the general standards specified in § 1060.101(f).

(b) If § 1060.5 does not require you to certify your equipment to any of the emission standards specified in §§ 1060.102 through 1060.105, your equipment is deemed to be certified with respect to the general standards specified in § 1060.101(f) if you design and produce your equipment to meet those standards.

(1) You must keep records as described in § 1060.210. The other provisions of this part for certificate holders apply only as specified in § 1060.5.

(2) Your equipment is deemed to be certified only to the extent that it meets the general standards in § 1060.101(f). Thus, it is a violation of 40 CFR 1068.101(a)(1) to introduce into U.S. commerce such equipment that does not meet applicable requirements under § 1060.101(f).

(c) Instead of relying on paragraph (b) of this section, you may submit an application for certification and obtain a certificate from us. The provisions of this part apply in the same manner for

certificates issued under this paragraph (c) as for any other certificate issued under this part.

§ 1060.205 What must I include in my application?

This section specifies the information that must be in your application, unless we ask you to include less information under § 1060.201(c). We may require you to provide additional information to evaluate your application.

(a) Describe the emission family's specifications and other basic parameters of the emission controls. Describe how you meet the running loss emission control requirements in § 1060.104, if applicable. Describe how you meet any applicable equipment-based requirements of § 1060.101(e) and (f). State whether you are requesting certification for gasoline or some other fuel type. List each distinguishable configuration in the emission family.

(b) Describe the products you selected for testing and the reasons for selecting them.

(c) Describe the test equipment and procedures that you used, including any special or alternate test procedures you used (see § 1060.501).

(d) List the specifications of the test fuel to show that it falls within the required ranges specified in subpart F of this part.

(e) State the equipment applications to which your certification is limited. For example, if your fuel system meets the emission requirements of this part applicable only to handheld Small SI equipment, state that the requested certificate would apply only for handheld Small SI equipment.

(f) Identify the emission family's useful life.

(g) Include the maintenance instructions you will give to the ultimate purchaser of each new nonroad engine (see § 1060.125).

(h) Include the emission-related installation instructions you will provide if someone else will install your component in a piece of nonroad equipment (see § 1060.130).

(i) Describe your emission control information label (see §§ 1060.135 and 1060.137).

(j) Identify the emission standards or FELs to which you are certifying the emission family.

(k) Present emission data to show your products meet the applicable emission standards. Note that §§ 1060.235 and 1060.240 allow you to submit an application in certain cases without new emission data.

(l) State that your product was tested as described in the application (including the test procedures, test parameters, and test fuels) to show you meet the requirements of this part. If you did not do the testing, identify the source of the data.

(m) Report all test results, including those from invalid tests, whether or not they were conducted according to the test procedures of subpart F of this part. We may ask you to send other information to confirm that your tests were valid under the requirements of this part.

(n) Unconditionally certify that all the products in the emission family comply with the requirements of this part, other referenced parts of the CFR, and the Clean Air Act.

(o) Include good-faith estimates of U.S.-directed production volumes. Include a justification for the estimated production volumes if they are substantially different than actual production volumes in earlier years for similar models.

(p) Include other applicable information, such as information required by other subparts of this part.

(q) Name an agent for service located in the United States. Service on this agent constitutes service on you or any of your officers or employees for any action by EPA or otherwise by the United States related to the requirements of this part.

EFFECTIVE DATE NOTE: At 86 FR 34529, June 29, 2021, § 1060.205 was amended, effective July 29, 2021.

§ 1060.210 What records should equipment manufacturers keep if they do not apply for certification?

If you are an equipment manufacturer that does not need to obtain a certificate of conformity for your equipment as described in § 1060.5, you must keep the records specified in this section to document compliance with

applicable requirements. We may review these records at any time. If we ask, you must send us these records within 30 days. You must keep these records for eight years from the end of the model year.

(a) Identify your equipment models and the annual U.S.-directed production volumes for each model.

(b) Identify the emission family names of the certificates that will cover your equipment, the part numbers of those certified components, and the names of the companies that hold the certificates. You must be able to identify this information for each piece of equipment you produce.

(c) Describe how you comply with any emission-related installation instructions, labeling requirements, and the general standards in § 1060.101(e) and (f).

§ 1060.225 How do I amend my application for certification?

Before we issue a certificate of conformity, you may amend your application to include new or modified configurations, subject to the provisions of this section. After we have issued your certificate of conformity, you may send us an amended application requesting that we include new or modified configurations within the scope of the certificate, subject to the provisions of this section. You must amend your application if any changes occur with respect to any information included in your application.

(a) You must amend your application before you take any of the following actions:

(1) Add a configuration to an emission family. In this case, the configuration added must be consistent with other configurations in the emission family with respect to the criteria listed in § 1060.230.

(2) Change a configuration already included in an emission family in a way that may affect emissions, or change any of the components you described in your application for certification. This includes production and design changes that may affect emissions any time during the equipment's lifetime.

(3) Modify an FEL for an emission family as described in paragraph (f) of this section. Note however that component manufacturers may not modify an FEL for their products unless they submit a separate application for a new emission family.

(b) To amend your application for certification, send the Designated Compliance Officer the following information:

(1) Describe in detail the addition or change in the configuration you intend to make.

(2) Include engineering evaluations or data showing that the amended emission family complies with all applicable requirements. You may do this by showing that the original emission data are still appropriate for showing that the amended family complies with all applicable requirements.

(3) If the original emission data for the emission family are not appropriate to show compliance for the new or modified configuration, include new test data showing that the new or modified configuration meets the requirements of this part.

(c) We may ask for more test data or engineering evaluations. Within 30 days after we make our request, you must provide the information or describe your plan for providing it in a timely manner.

(d) For emission families already covered by a certificate of conformity, we will determine whether the existing certificate of conformity covers your new or modified configuration. You may ask for a hearing if we deny your request (see § 1060.820).

(e) For emission families already covered by a certificate of conformity, you may start producing the new or modified configuration anytime after you send us your amended application and before we make a decision under paragraph (d) of this section. However, if we determine that the affected configurations do not meet applicable requirements, we will notify you to cease production of the configurations and may require you to recall the equipment at no expense to the owner. Choosing to produce equipment under this paragraph (e) is deemed to be consent to recall all equipment that we determine do not meet applicable emission standards or other requirements and to remedy the nonconformity at no expense

to the owner. If you do not provide information we request under paragraph (c) of this section within 30 days after we request it, you must stop producing the new or modified equipment.

(f) If you hold a certificate of conformity for equipment and you have certified the fuel tank that you install in the equipment, you may ask us to approve a change to your FEL after the start of production. The changed FEL may not apply to equipment you have already introduced into U.S. commerce, except as described in this paragraph (f). If we approve a changed FEL after the start of production, you must identify the date or serial number for applying the new FEL. If you identify this by month and year, we will consider that a lowered FEL applies on the last day of the month and a raised FEL applies on the first day of the month. You may ask us to approve a change to your FEL in the following cases:

(1) You may ask to raise your FEL for your emission family at any time. In your request, you must show that you will still be able to meet the emission standards as specified in the exhaust standard-setting part. If you amend your application by submitting new test data to include a newly added or modified fuel tank configuration, as described in paragraph (b)(3) of this section, use the appropriate FELs with corresponding production volumes to calculate your production-weighted average FEL for the model year. In all other circumstances, you must use the higher FEL for the entire family to calculate your production-weighted average FEL under subpart H of this part.

(2) You may ask to lower the FEL for your emission family only if you have test data from production units showing that emissions are below the proposed lower FEL. The lower FEL applies only for units you produce after we approve the new FEL. Use the appropriate FELs with corresponding production volumes to calculate your production-weighted average FEL for the model year.

(g) Component manufacturers may not change an emission family's FEL under any circumstances. Changing the FEL would require submission of a new application for certification.

EFFECTIVE DATE NOTE: At 86 FR 34529, June 29, 2021, § 1060.225 was amended, effective July 29, 2021.

§ 1060.230 How do I select emission families?

(a) For purposes of certification, divide your product line into families of equipment (or components) that are expected to have similar emission characteristics throughout their useful life.

(b) Group fuel lines into the same emission family if they are the same in all the following aspects:

(1) Type of material including barrier layer.

(2) Production method.

(3) Types of connectors and fittings (material, approximate wall thickness, etc.) for fuel line assemblies certified together.

(c) Group fuel tanks (or fuel systems including fuel tanks) into the same emission family if they are the same in all the following aspects:

(1) Type of material, including any pigments, plasticizers, UV inhibitors, or other additives that are expected to affect control of emissions.

(2) Production method.

(3) Relevant characteristics of fuel cap design for fuel systems subject to diurnal emission requirements.

(4) Gasket material.

(5) Emission control strategy.

(6) Family emission limit, if applicable.

(d) Group other fuel-system components and equipment into the same emission family if they are the same in all the following aspects:

(1) Emission control strategy and design.

(2) Type of material (such as type of charcoal used in a carbon canister). This criteria does not apply for materials that are unrelated to emission control performance.

(3) The fuel systems meet the running loss emission standard based on the same type of compliance demonstration specified in § 1060.104(b), if applicable.

(e) You may subdivide a group of equipment or components that are identical under paragraphs (b) through (d) of this section into different emission families if you show the expected emission characteristics are different during the useful life.

(f) In unusual circumstances, you may group equipment or components that are not identical with respect to the things listed in paragraph (b) through (d) of this section into the same emission family if you show that their emission characteristics during the useful life will be similar. The provisions of this paragraph (f) do not exempt any engines or equipment from meeting all the applicable standards and requirements in subpart B of this part.

(g) Emission families may include components used in multiple equipment categories. Such families are covered by a single certificate. For example, a single emission family may contain fuel tanks used in both Small SI equipment and Marine SI vessels.

EFFECTIVE DATE NOTE: At 86 FR 34529, June 29, 2021, § 1060.230 was amended, effective July 29, 2021.

§ 1060.235 What emission testing must I perform for my application for a certificate of conformity?

This section describes the emission testing you must perform to show compliance with the emission standards in subpart B of this part.

(a) Test your products using the procedures and equipment specified in subpart F of this part.

(b) Select an emission-data unit from each emission family for testing. If you are certifying with a family emission limit, you must test at least three emission-data units. In general, you must test a preproduction product that will represent actual production. However, for fuel tank permeation, you may test a tank with standardized geometry provided that it is made of the same material(s) and appropriate wall thickness. In general, the test procedures specify that components or systems be tested rather than complete equipment. For example, to certify your family of Small SI equipment, you would need to test a sample of fuel line for permeation emissions and a fuel tank for permeation emissions. Note that paragraph (e) of this section and § 1060.240 allow you in certain circumstances to certify without testing an emission-data unit from the emission family. Select test components that are most likely to exceed (or have emissions nearer to) the applicable emission standards as follows:

(1) For fuel tanks, consider the following factors associated with higher emission levels:

(i) Smallest average wall thickness (or barrier thickness, as appropriate).

(ii) Greatest extent of pinch welds for tanks using barrier technologies.

(iii) Greatest relative area of gasket material, especially if gaskets are made of high-permeation materials.

(2) For fuel lines, consider the following factors associated with higher emission levels:

(i) Smallest average wall thickness (or barrier thickness, as appropriate).

(ii) Smallest inner diameter.

(c) You may not do maintenance on emission-data units.

(d) We may measure emissions from any of your products from the emission family, as follows:

(1) You must supply your products to us if we choose to perform confirmatory testing.

(2) If we measure emissions on one of your products, the results of that testing become the official emission results for the emission family. Unless we later invalidate these data, we may decide not to consider your data in determining if your emission family meets applicable requirements.

(e) You may ask to use carryover emission data from a previous production period instead of doing new tests, but only if all the following are true:

(1) The emission family from the previous production period differs from the current emission family only with respect to production period or other characteristics unrelated to emissions. You may also ask to add a configuration subject to § 1060.225.

(2) The emission-data unit from the previous production period remains the appropriate emission-data unit under paragraph (b) of this section. For example, you may not carryover emission data for your family of nylon fuel tanks if you have added a thinner-walled fuel tank than was tested previously.

(3) The data show that the emission-data unit would meet all the requirements that apply to the emission family covered by the application for certification.

(f) We may require you to test another unit of the same or different configuration in addition to the unit(s) tested under paragraph (b) of this section.

(g) If you use an alternate test procedure under § 1060.505, and later testing shows that such testing does not produce results that are equivalent to the procedures specified in this part, we may reject data you generated using the alternate procedure.

EFFECTIVE DATE NOTE: At 86 FR 34529, June 29, 2021, § 1060.235 was amended, effective July 29, 2021.

§ 1060.240 How do I demonstrate that my emission family complies with evaporative emission standards?

(a) For purposes of certification, your emission family is considered in compliance with an evaporative emission standard in subpart B of this part if you do either of the following:

(1) You have test results showing a certified emission level from the fuel tank or fuel line (as applicable) in the family are at or below the applicable standard.

(2) You comply with design specifications as specified in paragraphs (d) through (f) of this section.

(b) Your emission family is deemed not to comply if any fuel tank or fuel line representing that family has an official emission result above the standard.

(c) Round each official emission result to the same number of decimal places as the emission standard.

(d) You may demonstrate for certification that your emission family complies with the fuel tank permeation standards specified in § 1060.103 with any of the following control technologies:

(1) A coextruded high-density polyethylene fuel tank with a continuous ethylene vinyl alcohol barrier layer (with not more than 40 molar percent ethylene) making up at least 2 percent of the fuel tank's overall wall thickness with any of the following gasket and fuel-cap characteristics:

(i) No nonmetal gaskets or fuel caps.

(ii) All nonmetal gaskets and fuel caps made from low-permeability materials.

(iii) Nonmetal gaskets and fuel caps that are not made from low-permeability materials up to the following limits:

(A) Gaskets with a total exposed surface area less than 0.25 percent of the total inside surface area of the fuel tank. For example, a fuel tank with an inside surface area of 0.40 square meters may use high-permeation gasket material representing a surface area of up to 1,000 mm^2 ($0.25\% \times 1/100 \times 0.40\ m^2 \times 1{,}000{,}000\ mm^2/m^2$). Determine surface area based on the amount of material exposed to liquid fuel.

(B) Fuel caps directly mounted to the fuel tank with the surface area of the fuel cap less than 3.0 percent of the total inside surface area of the fuel tank. Use the smallest inside cross-sectional area of the opening on which the cap is mounted as the fuel cap's surface area.

(2) A metal fuel tank with the gasket and fuel-cap characteristics meeting the specifications in paragraphs (d)(1)(i) through (iii) of this section.

(e) You may demonstrate for certification that your emission family complies with the diurnal emission standards specified in § 1060.105 with any of the following control technologies:

(1) A Marine SI fuel tank sealed up to a positive pressure of 7.0 kPa (1.0 psig); however, the fuel tank may contain air inlets that open when there is a vacuum pressure inside the tank.

(2) A Marine SI fuel tank equipped with a passively purged carbon canister that meets the requirements of this paragraph (e)(2). The carbon must adsorb no more than 0.5 grams of water per gram of carbon at 90% relative humidity and a temperature of 25±5 °C. The carbon granules must have a minimum mean diameter of 3.1 mm based on the procedures in ASTM D2862 (incorporated by reference in § 1060.810). The carbon must also pass a dust attrition test based on ASTM D3802 (incorporated by reference in § 1060.810), except that hardness is defined as the ratio of mean particle diameter before and after the test and the procedure must involve twenty ½-inch steel balls and ten ¾-inch steel balls. Use good engineering judgment in the structural design of the carbon canister. The canister must have a volume compensator

or some other device to prevent the carbon pellets from moving within the canister as a result of vibration or changing temperature. The canister must have a minimum working capacity as follows:

(i) You may use the measurement procedures specified by the California Air Resources Board in Attachment 1 to TP–902 to show that canister working capacity is least 3.6 grams of vapor storage capacity per gallon of nominal fuel tank capacity (or 1.4 grams of vapor storage capacity per gallon of nominal fuel tank capacity for fuel tanks used in nontrailerable boats). TP–902 is part of Final Regulation Order, Article 1, Chapter 15, Division 3, Title 13, California Code of Regulations, July 26, 2004 as adopted by the California Air Resources Board (incorporated by reference in § 1060.810).

(ii) You may produce canisters with a minimum carbon volume of 0.040 liters per gallon of nominal fuel tank capacity (or 0.016 liters per gallon for fuel tanks used in nontrailerable boats). The carbon canister must have a minimum effective length-to-diameter ratio of 3.5 and the vapor flow must be directed with the intent of using the whole carbon bed. The carbon must have a minimum carbon working capacity of 90 grams per liter.

(f) We may establish additional design certification options where we find that new test data demonstrate that the use of a different technology design will ensure compliance with the applicable emission standards.

(g) You may not establish a family emission limit below the emission standard for components certified based on design specifications under this section even if actual emission rates are much lower.

EFFECTIVE DATE NOTE: At 86 FR 34530, June 29, 2021, § 1060.240 was amended, effective July 29, 2021.

§ 1060.250 What records must I keep?

(a) Organize and maintain the following records:

(1) A copy of all applications and any summary information you send us.

(2) Any of the information we specify in § 1060.205 that you were not required to include in your application.

(3) A detailed history of each emission-data unit. For each emission data unit, include all of the following:

(i) The emission-data unit's construction, including its origin and buildup, steps you took to ensure that it represents production equipment, any components you built specially for it, and all the components you include in your application for certification.

(ii) All your emission tests, including documentation on routine and standard tests, and the date and purpose of each test.

(iii) All tests to diagnose emission control performance, giving the date and time of each and the reasons for the test.

(iv) Any other significant events.

(4) Annual production figures for each emission family divided by assembly plant.

(5) Keep a list of equipment identification numbers for all the equipment you produce under each certificate of conformity.

(b) Keep required data from routine emission tests (such as temperature measurements) for one year after we issue the associated certificate of conformity. Keep all other information specified in paragraph (a) of this section for eight years after we issue your certificate.

(c) Store these records in any format and on any media as long as you can promptly send us organized, written records in English if we ask for them. You must keep these records readily available. We may review them at any time.

EFFECTIVE DATE NOTE: At 86 FR 34530, June 29, 2021, § 1060.250 was amended, effective July 29, 2021.

§ 1060.255 What decisions may EPA make regarding my certificate of conformity?

(a) If we determine your application is complete and shows that the emission family meets all the requirements of this part and the Clean Air Act, we will issue a certificate of conformity for your emission family for that production period. We may make the approval subject to additional conditions.

(b) We may deny your application for certification if we determine that your emission family fails to comply with

emission standards or other requirements of this part or the Clean Air Act. We will base our decision on all available information. If we deny your application, we will explain why in writing.

(c) In addition, we may deny your application or suspend or revoke your certificate if you do any of the following:

(1) Refuse to comply with any testing or reporting requirements.

(2) Submit false or incomplete information (paragraph (e) of this section applies if this is fraudulent).

(3) Render inaccurate any test data.

(4) Deny us from completing authorized activities despite our presenting a warrant or court order (see 40 CFR 1068.20). This includes a failure to provide reasonable assistance.

(5) Produce equipment or components for importation into the United States at a location where local law prohibits us from carrying out authorized activities.

(6) Fail to supply requested information or amend your application to include all equipment or components being produced.

(7) Take any action that otherwise circumvents the intent of the Clean Air Act or this part.

(d) We may void your certificate if you do not keep the records we require or do not give us information when we ask for it.

(e) We may void your certificate if we find that you intentionally submitted false or incomplete information.

(f) If we deny your application or suspend, revoke, or void your certificate, you may ask for a hearing (see § 1060.820).

EFFECTIVE DATE NOTE: At 86 FR 34530, June 29, 2021, § 1060.255 was revised, effective July 29, 2021.

Subpart D—Production Verification Testing

§ 1060.301 Manufacturer testing.

(a) Using good engineering judgment, you must evaluate production samples to verify that equipment or components you produce are as specified in the certificate of conformity. This may involve testing using certification procedures or other measurements.

(b) You must give us records to document your evaluation if we ask for them.

§ 1060.310 Supplying products to EPA for testing.

Upon our request, you must supply a reasonable number of production samples to us for verification testing.

Subpart E—In-use Testing

§ 1060.401 General Provisions.

We may perform in-use testing of any equipment or fuel-system components subject to the standards of this part.

Subpart F—Test Procedures

§ 1060.501 General testing provisions.

(a) This subpart is addressed to you as a certifying manufacturer but it applies equally to anyone who does testing for you.

(b) Unless we specify otherwise, the terms ''procedures'' and ''test procedures'' in this part include all aspects of testing, including the equipment specifications, calibrations, calculations, and other protocols and procedural specifications needed to measure emissions.

(c) The specification for gasoline to be used for testing is given in 40 CFR 1065.710. Use the grade of gasoline specified for general testing. For testing specified in this part that requires a blend of gasoline and ethanol, blend this grade of gasoline with fuel-grade ethanol meeting the specifications of ASTM D4806 (incorporated by reference in § 1060.810). You do not need to measure the ethanol concentration of such blended fuels and may instead calculate the blended composition by assuming that the ethanol is pure and mixes perfectly with the base fuel. For example, if you mix 10.0 liters of fuel-grade ethanol with 90.0 liters of gasoline, you may assume the resulting mixture is 10.0 percent ethanol. You may use more or less pure ethanol if you can demonstrate that it will not affect your ability to demonstrate compliance with the applicable emission standards. Note that unless we specify otherwise, any references to gasoline-ethanol mixtures containing a specified ethanol concentration means

mixtures meeting the provisions of this paragraph (c).

(d) Accuracy and precision of all temperature measurements must be ±1.0 °C or better. If you use multiple sensors to measure differences in temperature, calibrate the sensors so they will be within 0.5 °C of each other when they are in thermal equilibrium at a point within the range of test temperatures (use the starting temperature in Table 1 to § 1060.525 unless this is not feasible).

(e) Accuracy and precision of mass balances must be sufficient to ensure accuracy and precision of two percent or better for emission measurements for products at the maximum level allowed by the standard. The readability of the display may not be coarser than half of the required accuracy and precision. Examples are shown in the following table for a digital readout:

	Example #1	Example #2	Example #3
Applicable standard	1.5 g/m²/day	1.5 g/m²/day	15 g/m²/day.
Internal surface area	1.15 m²	0.47 m²	0.015 m².
Length of test	14.0 days	14.0 days	14.1 days.
Maximum allowable mass change	24.15 g	9.87 g	3.173 g.
Required accuracy and precision	±0.483 g or better	±0.197 g or better	±0.0635 g or better.
Required readability	0.1 g or better	0.1 g or better	0.01 g or better.

[73 FR 59298, Oct. 8, 2008, as amended at 74 FR 8427, Feb. 24, 2009]

EFFECTIVE DATE NOTE: At 86 FR 34530, June 29, 2021, § 1060.501 was amended, effective July 29, 2021.

§ 1060.505 Other procedures.

(a) *Your testing*. The procedures in this part apply for all testing you do to show compliance with emission standards, with certain exceptions listed in this section.

(b) *Our testing*. These procedures generally apply for testing that we do to determine if your equipment complies with applicable emission standards. We may perform other testing as allowed by the Clean Air Act.

(c) *Exceptions*. We may allow or require you to use procedures other than those specified in this part in the following cases:

(1) You may request to use special procedures if your equipment cannot be tested using the specified procedures. We will approve your request if we determine that it would produce emission measurements that represent in-use operation and we determine that it can be used to show compliance with the requirements of the standard-setting part.

(2) You may ask to use emission data collected using other procedures, such as those of the California Air Resources Board or the International Organization for Standardization. We will approve this only if you show us that using these other procedures does not affect your ability to show compliance with the applicable emission standards. This generally requires emission levels to be far enough below the applicable emission standards so any test differences do not affect your ability to state unconditionally that your equipment will meet all applicable emission standards when tested using the specified test procedures.

(3) You may request to use alternate procedures that are equivalent to allowed procedures or are more accurate or more precise than allowed procedures. See 40 CFR 1065.12 for a description of the information that is generally required to show that an alternate test procedure is equivalent.

(4) The test procedures are specified for gasoline-fueled equipment. If your equipment will use another volatile liquid fuel instead of gasoline, use a test fuel that is representative of the fuel that will be used with the equipment in use. You may ask us to approve other changes to the test procedures to reflect the effects of using a fuel other than gasoline.

(d) *Approval*. If we require you to request approval to use other procedures under paragraph (c) of this section, you may not use them until we approve your request.

EFFECTIVE DATE NOTE: At 86 FR 34531, June 29, 2021, § 1060.505 was amended, effective July 29, 2021.

§ 1060.510 How do I test EPA Low-Emission Fuel Lines for permeation emissions?

For EPA Low-Emission Fuel Lines, measure emissions according to SAE J2260, which is incorporated by reference in § 1060.810.

[74 FR 8427, Feb. 24, 2009]

§ 1060.515 How do I test EPA Nonroad Fuel Lines and EPA Cold-Weather Fuel Lines for permeation emissions?

Measure emission as follows for EPA Nonroad Fuel Lines and EPA Cold-Weather Fuel Lines:

(a) Prior to permeation testing, use good engineering judgment to precondition the fuel line by filling it with the fuel specified in this paragraph (a), sealing the openings, and soaking it for at least four weeks at 43 ±5 °C or eight weeks at 23 ±5 °C.

(1) For EPA Nonroad Fuel Lines, use Fuel CE10, which is Fuel C as specified in ASTM D471 (incorporated by reference in § 1060.810) blended with ethanol such that the blended fuel has 10.0 ±1.0 percent ethanol by volume.

(2) For EPA Cold-Weather Fuel Lines, use gasoline blended with ethanol such that the blended fuel has 10.0 ±1.0 percent ethanol by volume.

(b) Drain the fuel line and refill it immediately with the fuel specified in paragraph (a) of this section. Be careful not to spill any fuel.

(c) Except as specified in paragraph (d) of this section, measure fuel line permeation emissions using the equipment and procedures for weight-loss testing specified in SAE J30 or SAE J1527 (incorporated by reference in § 1060.810). Start the measurement procedure within 8 hours after draining and refilling the fuel line. Perform the emission test over a sampling period of 14 days. You may omit up to two daily measurements in any seven day period. Determine your final emission result based on the average of measured values over the 14-day period. Maintain an ambient temperature of 23±2 °C throughout the sampling period.

(d) For fuel lines with a nominal inner diameter below 5.0 mm, you may alternatively measure fuel line permeation emissions using the equipment and procedures for weight-loss testing specified in SAE J2996 (incorporated by reference in § 1060.810). Determine your final emission result based on the average of measured values over the 14-day sampling period. Maintain an ambient temperature of 23±2 °C throughout the sampling period.

(e) Use good engineering judgment to test short fuel line segments. For example, you may need to join individual fuel line segments using proper connection fittings to achieve enough length and surface area for a proper measurement. Size the fuel reservoir appropriately for the tested fuel line.

[73 FR 59298, Oct. 8, 2008, as amended at 74 FR 8427, Feb. 24, 2009; 75 FR 23027, Apr. 30, 2010; 80 FR 9116, Feb. 19, 2015]

EFFECTIVE DATE NOTE: At 86 FR 34531, June 29, 2021, § 1060.515 was amended, effective July 29, 2021.

§ 1060.520 How do I test fuel tanks for permeation emissions?

Measure permeation emissions by weighing a sealed fuel tank before and after a temperature-controlled soak.

(a) *Preconditioning durability testing.* Take the following steps before an emission test, in any order, if your emission control technology involves surface treatment or other post-processing treatments such as an epoxy coating:

(1) *Pressure cycling.* Perform a pressure test by sealing the tank and cycling it between +13.8 and −3.4 kPa (+2.0 and −0.5 psig) for 10,000 cycles at a rate of 60 seconds per cycle. The purpose of this test is to represent environmental wall stresses caused by pressure changes and other factors (such as vibration or thermal expansion). If your tank cannot be tested using the pressure cycles specified by this paragraph (a)(1), you may ask to use special test procedures under § 1060.505.

(2) *UV exposure.* Perform a sunlight-exposure test by exposing the tank to an ultraviolet light of at least 24 W/m^2 (0.40 W-hr/m^2/min) on the tank surface for at least 450 hours. Alternatively, the fuel tank may be exposed to direct natural sunlight for an equivalent period of time as long as you ensure that the tank is exposed to at least 450 daylight hours.

(3) *Slosh testing.* Perform a slosh test by filling the tank to 40–50 percent of

its capacity with the fuel specified in paragraph (e) of this section and rocking it at a rate of 15 cycles per minute until you reach one million total cycles. Use an angle deviation of + 15° to −15° from level.

(4) *Cap testing*. Perform durability cycles on fuel caps intended for use with handheld equipment by putting the fuel cap on and taking it off 300 times. Tighten the fuel cap each time in a way that represents the typical in-use experience.

(b) *Preconditioning fuel soak*. Take the following steps before an emission test:

(1) Fill the tank with the fuel specified in paragraph (e) of this section, seal it, and allow it to soak at 28 ±5 °C for at least 20 weeks. Alternatively, the tank may be soaked for at least 10 weeks at 43±5 °C. You may count the time of the preconditioning steps in paragraph (a) of this section as part of the preconditioning fuel soak as long as the ambient temperature remains within the specified temperature range and the fuel tank is at least 40 percent full; you may add or replace fuel as needed to conduct the specified durability procedures.

(2) Empty the fuel tank and immediately refill it with the specified test fuel to its nominal capacity. Be careful not to spill any fuel.

(3) [Reserved]

(4) Allow the tank and its contents to equilibrate to the temperatures specified in paragraph (d)(7) of this section. Seal the fuel tank as described in paragraph (b)(5) of this section once the fuel temperatures are stabilized at the test temperature. You must seal the tank no more than eight hours after refueling. Until the fuel tank is sealed, take steps to minimize the vapor losses from the fuel tank, such as keeping the fuel cap loose on the fuel inlet or routing vapors through a vent hose.

(5) Seal the fuel tank as follows:

(i) If fuel tanks are designed for use with a filler neck such that the fuel cap is not directly mounted on the fuel tank, you may seal the fuel inlet with a nonpermeable covering.

(ii) If fuel tanks are designed with fuel caps directly mounted on the fuel tank, take one of the following approaches:

(A) Use a production fuel cap expected to have permeation emissions at least as high as the highest-emitting fuel cap that you expect to be used with fuel tanks from the emission family. It would generally be appropriate to consider an HDPE fuel cap with a nitrile rubber seal to be worst-case.

(B) You may seal the fuel inlet with a nonpermeable covering if you separately account for permeation emissions from the fuel cap. This may involve a separate measurement of permeation emissions from a worst-case fuel cap as described in §1060.521. This may also involve specifying a worst-case Family Emission Limit based on separately certified fuel caps as described in §1060.103(e).

(C) If you use or specify a fuel gasket made of low-permeability material, you may seal the fuel inlet with a nonpermeable covering and calculate an emission rate for the complete fuel tank using a default value of 30 g/m^2/day for the fuel cap (or 50 g/m^2/day for testing at 40 °C). Use the smallest inside cross-sectional area of the opening on which the cap is mounted as the fuel cap's surface area.

(iii) Openings that are not normally sealed on the fuel tank (such as hose-connection fittings and vents in fuel caps) may be sealed using nonpermeable fittings such as metal or fluoropolymer plugs.

(iv) Openings for petcocks that are designed for draining fuel may be sealed using nonpermeable fittings such as metal or fluoropolymer plugs.

(v) Openings for grommets may be sealed using nonpermeable fittings such as metal or fluoropolymer plugs.

(vi) Rather than sealing a fuel tank with nonpermeable fittings, you may produce a fuel tank for testing without machining or stamping those holes.

(c) *Reference tank*. A reference tank is required to correct for buoyancy effects that may occur during testing. Prepare the reference tank as follows:

(1) Obtain a second tank whose total volume is within 5 percent of the test tank's volume. You may not use a tank that has previously contained fuel or any other contents that might affect its mass stability.

(2) Fill the reference tank with enough glass beads (or other inert material) so the mass of the reference tank is approximately the same as the test tank when filled with fuel. Considering the performance characteristics of your balance, use good engineering judgment to determine how similar the mass of the reference tank needs to be to the mass of the test tank.

(3) Ensure that the inert material is dry.

(4) Seal the tank.

(d) *Permeation test run.* To run the test, take the following steps after preconditioning:

(1) Determine the fuel tank's internal surface area in square-meters, accurate to at least three significant figures. You may use less accurate estimates of the surface area if you make sure not to overestimate the surface area.

(2) Weigh the sealed test tank and record the weight. Place the reference tank on the balance and tare it so it reads zero. Place the sealed test tank on the balance and record the difference between the test tank and the reference tank. This value is M_o. Take this measurement directly after sealing the test tank as specified in paragraphs (b)(4) and (5) of this section.

(3) Carefully place the tank within a temperature-controlled room or enclosure. Do not spill or add any fuel.

(4) Close the room or enclosure as needed to control temperatures and record the time. However, you may need to take steps to prevent an accumulation of hydrocarbon vapors in the room or enclosure that might affect the degree to which fuel permeates through the fuel tank. This might simply involve passive ventilation to allow fresh air exchanges.

(5) Ensure that the measured temperature in the room or enclosure stays within the temperatures specified in paragraph (d)(6) of this section.

(6) Leave the tank in the room or enclosure for the duration of the test run.

(7) Hold the temperature of the room or enclosure at 28 ±2 °C; measure and record the temperature at least daily. You may alternatively hold the temperature of the room or enclosure at 40 ±2 °C to demonstrate compliance with the alternative standards specified in § 1060.103(b).

(8) Measure weight loss daily by retaring the balance using the reference tank and weighing the sealed test tank. Calculate the cumulative weight loss in grams for each measurement. Calculate the coefficient of determination, r^2, based on a linear plot of cumulative weight loss vs. test days. Use the equation in 40 CFR 1065.602(k), with cumulative weight loss represented by y_i and cumulative time represented by y_{ref}. The daily measurements must be at approximately the same time each day. You may omit up to two daily measurements in any seven-day period. Test for ten full days, then determine when to stop testing as follows:

(i) You may stop testing after the measurement on the tenth day if r^2 is at or above 0.95 or if the measured value is less than 50 percent of the applicable standard. (Note that if a Family Emission Limit applies for the family, it is considered to be the applicable standard for that family.) This means that if you stop testing with an r^2 below 0.95, you may not use the data to show compliance with a Family Emission Limit less than twice the measured value.

(ii) If after ten days of testing your r^2 value is below 0.95 and your measured value is more than 50 percent of the applicable standard, continue testing for a total of 20 days or until r^2 is at or above 0.95. If r^2 is not at or above 0.95 within 20 days of testing, discontinue the test and precondition the fuel tank further until it has stabilized emission levels, then repeat the testing.

(9) Record the difference in mass between the reference tank and the test tank for each measurement. This value is M_i, where i is a counter representing the number of days elapsed. Subtract M_i from M_o and divide the difference by the internal surface area of the fuel tank. Divide this g/m^2 value by the number of test days (using at least two decimal places) to calculate the emission rate in g/m^2/day. Example: If a tank with an internal surface area of 0.720 m^2 weighed 1.31 grams less than the reference tank at the beginning of the test and weighed 9.86 grams less than the reference tank after soaking for 10.03 days, the emission rate would be—

$((-1.31\ g)-(-9.86\ g))/0.720\ m^2/10.03\ days = 1.1839\ g/m^2/day$

(10) Determine your final emission result based on the cumulative weight loss measured on the final day of testing. Round this result to the same number of decimal places as the emission standard.

(e) *Fuel specifications.* Use gasoline blended with ethanol such that the blended fuel has 10.0 ±1.0 percent ethanol by volume as specified in § 1060.501. As an alternative, you may use Fuel CE10, as described in § 1060.515(a)(1).

(f) *Flow chart.* The following figure presents a flow chart for the permeation testing described in this section:

Figure 1 to §1060.520 — Fuel Tank Permeation Test Procedures

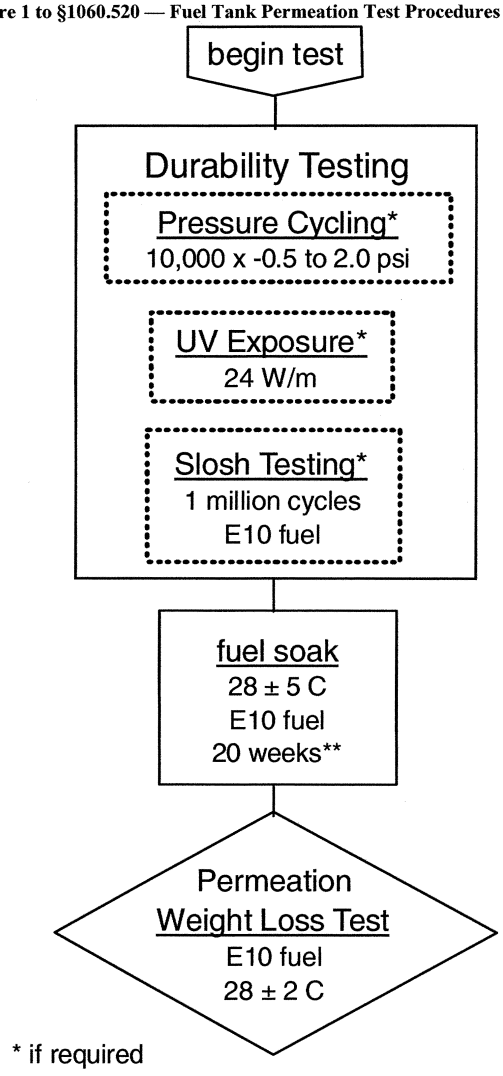

*** The length of "soak" during durability testing may be included in the fuel soak period provided that fuel remains in the tank. Soak periods can be shortened to 10 weeks if performed at 43* ± 5 C

[73 FR 59298, Oct. 8, 2008, as amended at 75 FR 23027, Apr. 30, 2010; 80 FR 9116, Feb. 19, 2015]

EFFECTIVE DATE NOTE: At 86 FR 34531, June 29, 2021, §1060.520 was amended, effective July 29, 2021.

§ 1060.521 How do I test fuel caps for permeation emissions?

If you measure a fuel tank's permeation emissions with a nonpermeable covering in place of the fuel cap under § 1060.520(b)(5)(ii)(B), you must separately measure permeation emissions from a fuel cap. You may show that your fuel tank and fuel cap meet emission standards by certifying them separately or by combining the separate measurements into a single emission rate based on the relative surface areas of the fuel tank and fuel cap. However, you may not combine these emission measurements if you test the fuel cap at a nominal temperature of 28 °C and you test the fuel tank at 40 °C. Measure the fuel cap's permeation emissions as follows:

(a) Select a fuel cap expected to have permeation emissions at least as high as the highest-emitting fuel cap that you expect to be used with fuel tanks from the emission family. Include a gasket that represents production models. If the fuel cap includes vent paths, seal these vents as follows:

(1) If the vent path is through grooves in the gasket, you may use another gasket with no vent grooves if it is otherwise the same as a production gasket.

(2) If the vent path is through the cap, seal any vents for testing.

(b) Attach the fuel cap to a fuel tank with a capacity of at least one liter made of metal or some other impermeable material.

(c) Use the procedures specified in § 1060.520 to measure permeation emissions. Calculate emission rates using the smallest inside cross sectional area of the opening on which the cap is mounted as the fuel cap's surface area.

§ 1060.525 How do I test fuel systems for diurnal emissions?

Use the procedures of this section to determine whether your fuel tanks meet diurnal emission standards as specified in § 1060.105.

(a) Use the following procedure to measure diurnal emissions:

(1) Diurnal measurements are based on representative temperature cycles, as follows:

(i) Diurnal fuel temperatures for marine fuel tanks that will be installed in nontrailerable boats must undergo repeat temperature swings of 2.6 °C between nominal values of 27.6 and 30.2 °C.

(ii) Diurnal fuel temperatures for other installed marine fuel tanks must undergo repeat temperature swings of 6.6 °C between nominal values of 25.6 and 32.2 °C.

(iii) For fuel tanks installed in equipment other than marine vessels, the following table specifies a profile of ambient temperatures:

TABLE 1 TO § 1060.525—DIURNAL TEMPERATURE PROFILES FOR NONMARINE FUEL TANKS

Time (hours)	Ambient temperature profile (°C)
0	22.2
1	22.5
2	24.2
3	26.8
4	29.6
5	31.9
6	33.9
7	35.1
8	35.4
9	35.6
10	35.3
11	34.5
12	33.2
13	31.4
14	29.7
15	28.2
16	27.2
17	26.1
18	25.1
19	24.3
20	23.7
21	23.3
22	22.9
23	22.6
24	22.2

(2) Fill the fuel tank to 40 percent of nominal capacity with the gasoline specified in 40 CFR 1065.710 for general testing.

(3) Install a vapor line from any vent ports that would not be sealed in the final in-use configuration. Use a length of vapor line representing the largest inside diameter and shortest length that would be expected with the range of in-use installations for the emission family.

(4) If the fuel tank is equipped with a carbon canister, load the canister with butane or gasoline vapors to its canister working capacity as specified in § 1060.240(e)(2)(i) and attach it to the fuel tank in a way that represents a typical in-use configuration. Purge the

canister as follows to prepare for emission measurement:

(i) For marine fuel tanks, perform a single heating and cooling cycle as specified in paragraph (a)(7) of this section without measuring emissions.

(ii) For nonmarine fuel tanks, establish a characteristic purge volume by running an engine with the fuel tank installed to represent an in-use configuration. Measure the volume of air flowing through the canister while the engine operates for 30 minutes over repeat cycles of the appropriate duty cycle used for certifying the engine for exhaust emissions. Set up the loaded canister for testing by purging it with the characteristic purge volume from the engine simulation run.

(5) Stabilize the fuel tank to be within 2.0 °C of the nominal starting temperature specified in paragraph (a)(1) of this section. In the case of marine fuel tanks, install a thermocouple meeting the requirements of 40 CFR 86.107–96(e) in the approximate mid-volume of fuel and record the temperature at the end of the stabilization period to the nearest 0.1 °C. For sealed fuel systems, replace the fuel cap once the fuel reaches equilibrium at the appropriate starting temperature.

(6) Prepare the tank for mass measurement using one of the following procedures:

(i) Place the stabilized fuel tank in a SHED meeting the specifications of 40 CFR 86.107–96(a)(1) that is equipped with a FID analyzer meeting the specifications of 40 CFR 1065.260. Take the following steps in sequence:

(A) Purge the SHED.

(B) Close and seal the SHED.

(C) Zero and span the FID analyzer.

(D) Within ten minutes of sealing the SHED, measure the initial hydrocarbon concentration. This is the start of the sampling period.

(ii) If your testing configuration involves mass emissions at the standard of 2.0 grams or more, you may alternatively place the stabilized fuel tank in any temperature-controlled environment and establish mass emissions as a weight loss relative to a reference fuel tank using the procedure specified in §1060.520(d) instead of calculating it from changing hydrocarbon concentrations in the SHED.

(7) Control temperatures as follows:

(i) For marine fuel tanks, supply heat to the fuel tank for continuously increasing temperatures such that the fuel reaches the maximum temperature in 8 hours. Set the target temperature by adding the temperature swing specified in paragraph (a)(1) of this section to the recorded starting temperature. Hold the tank for approximately 60 minutes at a temperature no less than 0.1 °C below the target temperature. For example, if the recorded starting fuel temperature for a fuel tank that will be installed in a nontrailerable vessel is 27.1 °C, the target temperature is 29.7 °C and the fuel must be stabilized for 60 minutes with fuel temperatures not falling below 29.6 °C. For EPA testing, fuel temperatures may not go 1.0 °C above the target temperature at any point during the heating or stabilization sequence. Measure the hydrocarbon concentration in the SHED at the end of the high-temperature stabilization period. Calculate the diurnal emissions for this heating period based on the change in hydrocarbon concentration over this sampling period. Allow the fuel temperature to cool sufficiently to stabilize again at the starting temperature without emission sampling. Repeat the heating and measurement sequence for three consecutive days, starting each heating cycle no more than 26 hours after the previous start.

(ii) For nonmarine fuel tanks, follow the air temperature trace from paragraph (a)(1)(iii) of this section for three consecutive 24-hour periods. Measured temperatures must follow the profile with a maximum deviation of 1.7 °C for any hourly measurement and an average temperature deviation not to exceed 1.0 °C, where the average deviation is calculated using the absolute value of each measured deviation. Start measuring emissions when you start the temperature profile. The end of the first, second, and third emission sampling periods must occur 1440±6, 2880±6, and 4320±6 minutes, respectively, after starting the measurement procedure.

(8) Use the highest of the three emission levels to determine whether your fuel tank meets the diurnal emission standard.

(9) For emission control technologies that rely on a sealed fuel system, you may omit the preconditioning steps in paragraph (a)(4) of this section and the last two 24-hour periods of emission measurements in paragraph (a)(7) of this section. For purposes of this paragraph (a), sealed fuel systems include those that rely on pressure-relief valves, limiting flow orifices, bladder fuel tanks, and volume-compensating air bags.

(b) You may subtract your fuel tank's permeation emissions from the measured diurnal emissions if the fuel tank is preconditioned with diurnal test fuel as described in § 1060.520(b) or if you use good engineering judgment to otherwise establish that the fuel tank has stabilized permeation emissions. Measure permeation emissions for subtraction as specified in § 1060.520(c) and (d) before measuring diurnal emissions, except that the permeation measurement must be done with diurnal test fuel at 28±2 °C. Use appropriate units and corrections to subtract the permeation emissions from the fuel tank during the diurnal emission test. You may not subtract a greater mass of emissions under this paragraph (b) than the fuel tank would emit based on meeting the applicable emission standard for permeation.

[80 FR 9117, Feb. 19, 2015]

EFFECTIVE DATE NOTE: At 86 FR 34531, June 29, 2021, § 1060.525 was amended, effective July 29, 2021.

Subpart G—Special Compliance Provisions

§ 1060.601 How do the prohibitions of 40 CFR 1068.101 apply with respect to the requirements of this part?

(a) As described in § 1060.1, fuel tanks and fuel lines that are used with or intended to be used with new nonroad engines or equipment are subject to evaporative emission standards under this part 1060. This includes portable marine fuel tanks and fuel lines and other fuel-system components associated with portable marine fuel tanks. Note that § 1060.1 specifies an implementation schedule based on the date of manufacture of nonroad equipment, so new fuel tanks and fuel lines are not subject to standards under this part 1060 if they will be installed for use in equipment built before the specified dates for implementing the appropriate standards, subject to the limitations in paragraph (b) of this section. Except as specified in paragraph (f) of this section, fuel-system components that are subject to permeation or diurnal emission standards under this part 1060 must be covered by a valid certificate of conformity before being introduced into U.S. commerce to avoid violating the prohibition of 40 CFR 1068.101(a). To the extent we allow it under the exhaust standard-setting part, fuel-system components may be certified with a family emission limit higher than the specified emission standard. The provisions of this paragraph (a) do not apply to fuel caps.

(b) New replacement fuel tanks and fuel lines must meet the requirements of this part 1060 if they are intended to be used with nonroad engines or equipment regulated under this part 1060, as follows:

(1) *Applicability of standards between January 1, 2012 and December 31, 2019.* Manufacturers, distributors, retailers, and importers must clearly state on the packaging for all replacement components that could reasonably be used with nonroad engines how such components may be used consistent with the prohibition in paragraph (a) of this section. It is presumed that such components are intended for use with nonroad engines regulated under this part 1060 unless the components, or the packaging for such components, clearly identify appropriate restrictions. This requirement does not apply for components that are clearly not intended for use with fuels.

(2) *Applicability of standards after January 1, 2020.* Starting January 1, 2020 it is presumed that replacement components will be used with nonroad engines regulated under this part 1060 if they can reasonably be used with such engines. Manufacturers, distributors, retailers, and importers are therefore obligated to take reasonable steps to ensure that any uncertified components are not used to replace certified

components. This would require labeling the components and may also require restricting the sales and requiring the ultimate purchaser to agree to not use the components inappropriately. This requirement does not apply for components that are clearly not intended for use with fuels.

(3) *Applicability of the tampering prohibition.* If a fuel tank or fuel line needing replacement was certified to meet the emission standards in this part with a family emission limit below the otherwise applicable standard, the new replacement fuel tank or fuel line must be certified to current emission standards, but need not be certified with the same or lower family emission limit to avoid violating the tampering prohibition in 40 CFR 1068.101(b)(1).

(c) [Reserved]

(d) Manufacturers that generate or use evaporative emission credits related to Marine SI engines in 40 CFR part 1045 or Small SI engines in 40 CFR part 1054 are subject to the emission standards for which they are generating or using evaporative emission credits. These engines or equipment must therefore be covered by a valid certificate of conformity showing compliance with emission-credit provisions before being introduced into U.S. commerce to avoid violating the prohibition of 40 CFR 1068.101(a).

(e) If there is no valid certificate of conformity for any given evaporative emission standard for new equipment, the manufacturers of the engine, equipment and fuel-system components are each liable for violations of the prohibited acts with respect to the fuel systems and fuel-system components they have introduced into U.S. commerce, including fuel systems and fuel-system components installed in engines or equipment at the time the engines or equipment are introduced into U.S. commerce.

(f) If you manufacture fuel lines or fuel tanks that are subject to the requirements of this part as described in paragraph (a) of this section, 40 CFR 1068.101(a) does not prohibit you from shipping your products directly to an equipment manufacturer or another manufacturer from which you have received a written commitment to be responsible for certifying the components as required under this part 1060. This includes SHED-based certification of Small SI equipment as described in §1060.105. If you ship fuel lines or fuel tanks under this paragraph (f), you must include documentation that accompanies the shipped products identifying the name and address of the company receiving shipment and stating that the fuel lines or fuel tanks are exempt under the provisions of 40 CFR 1060.601(f).

(g) If new evaporative emission standards apply in a given model year, your equipment in that model year must have fuel-system components that are certified to the new standards, except that you may continue to use up your normal inventory of earlier fuel-system components that were built before the date of the new or changed standards. For example, if your normal inventory practice is to keep on hand a one-month supply of fuel tanks based on your upcoming production schedules, and a new tier of standards starts to apply for the 2012 model year, you may order fuel tanks based on your normal inventory requirements late in the fuel tank manufacturer's 2011 model year and install those fuel tanks in your equipment, regardless of the date of installation. Also, if your model year starts before the end of the calendar year preceding new standards, you may use fuel-system components from the previous model year (or uncertified components if no standards were in place) for those units you produce before January 1 of the year that new standards apply. If emission standards do not change in a given model year, you may continue to install fuel-system components from the previous model year without restriction. You may not circumvent the provisions of 40 CFR 1068.101(a)(1) by stockpiling fuel-system components that were built before new or changed standards take effect.

(h) If equipment manufacturers hold certificates of conformity for their equipment but they use only fuel-system components that have been certified by other companies, they may satisfy their defect-reporting obligations by tracking the information described in 40 CFR 1068.501(b)(1) related

to possible defects, reporting this information to the appropriate component manufacturers, and keeping these records for eight years. Such equipment manufacturers will not be considered in violation of 40 CFR 1068.101(b)(6) for failing to perform investigations, make calculations, or submit reports to EPA as specified in 40 CFR 1068.501. *See* § 1060.5(a).

[73 FR 59298, Oct. 8, 2008, as amended at 75 FR 23027, Apr. 30, 2010]

EFFECTIVE DATE NOTE: At 86 FR 34532, June 29, 2021, § 1060.601 was amended, effective July 29, 2021.

§ 1060.605 Exemptions from evaporative emission standards.

(a) Except as specified in the exhaust standard-setting part and paragraph (b) of this section, equipment using an engine that is exempt from exhaust emission standards under the provisions in 40 CFR part 1068, subpart C or D, is also exempt from the requirements of this part 1060. For example, engines or equipment exempted from exhaust emission standards for purposes of national security do not need to meet evaporative emission standards. Also, any engine that is exempt from emission standards because it will be used solely for competition does not need to meet evaporative emission standards. Equipment that is exempt from all exhaust emission standards under the standard-setting part are also exempt from the requirements of this part 1060; however, this does not apply for engines that must meet a less stringent exhaust emission standard as a condition of the exemption.

(b) Engines produced under the replacement-engine exemption in 40 CFR 1068.240 must use fuel-system components that meet the evaporative emission standards based on the model year of the engine being replaced subject to the provisions of 40 CFR 1068.265. If no evaporative emission standards applied at that time, no requirements related to evaporative emissions apply to the new engine. Installing a replacement engine does not change the applicability of requirements for the equipment into which the replacement engine is installed.

(c) Engines or equipment that are temporarily exempt from EPA exhaust emission standards are also exempt from the requirements of this part 1060 for the same period as the exhaust exemption.

(d) For equipment powered by more than one engine, all the engines installed in the equipment must be exempt from all applicable EPA exhaust emission standards for the equipment to also be exempt under paragraph (a) or (b) of this section.

(e) In unusual circumstances, we may exempt components or equipment from the requirements of this part 1060 even if the equipment is powered by one or more engines that are subject to EPA exhaust emission standards. See 40 CFR part 1068. Such exemptions will be limited to:

(1) Testing. See 40 CFR 1068.210.

(2) National security. See 40 CFR 1068.225.

(3) Economic hardship. See 40 CFR 1068.245 and 1068.250.

(f) Evaporative emission standards generally apply based on the model year of the equipment, which is determined by the equipment's date of final assembly. However, in the first year of new emission standards, equipment manufacturers may apply evaporative emission standards based on the model year of the engine as shown on the engine's emission control information label. For example, for fuel tank permeation standards starting in 2012, equipment manufacturers may order a batch of 2011 model year engines for installation in 2012 model year equipment, subject to the anti-stockpiling provisions of 40 CFR 1068.105(a). The equipment with the 2011 model year engines would not need to meet fuel tank permeation standards as long as the equipment is fully assembled by December 31, 2012.

§ 1060.610 Temporary exemptions for manufacturing and assembling equipment and fuel-system components.

(a) If you are a certificate holder, you may ship components or equipment requiring further assembly between two of your facilities, subject to the provisions of this paragraph (a). Unless we approve otherwise, you must maintain ownership and control of the products until they reach their destination. We

may allow for shipment where you do not maintain actual ownership and control of the engines (such as hiring a shipping company to transport the products) but only if you demonstrate that the products will be transported only according to your specifications. Notify us of your intent to use the exemption in this paragraph (a) in your application for certification, if applicable. Your exemption is effective when we grant your certificate. You may alternatively request an exemption in a separate submission; for example, this would be necessary if you will not be the certificate holder for the products in question. We may require you to take specific steps to ensure that such products are in a certified configuration before reaching the ultimate purchaser. Note that since this is a temporary exemption, it does not allow you to sell or otherwise distribute equipment in an uncertified configuration to ultimate purchasers. Note also that the exempted equipment remains new and subject to emission standards until its title is transferred to the ultimate purchaser or it otherwise ceases to be new.

(b) If you certify equipment, you may ask us at the time of certification for an exemption to allow you to ship your equipment without a complete fuel system. We will generally approve an exemption under this paragraph (b) only if you can demonstrate that the exemption is necessary and that you will take steps to ensure that equipment assembly will be properly completed before reaching the ultimate purchaser. We may specify conditions that we determine are needed to ensure that shipping the equipment without such components will not result in the equipment operating with uncertified components or otherwise in an uncertified configuration. For example, we may require that you ship the equipment to manufacturers that are contractually obligated to install certain components. See 40 CFR 1068.261.

EFFECTIVE DATE NOTE: At 86 FR , June 29, 2021, § 1060.610 was added, effective July 29, 2021.

§ 1060.640 What special provisions apply to branded equipment?

The following provisions apply if you identify the name and trademark of another company instead of your own on your emission control information label for equipment, as provided by §§ 1060.135 and 1060.137:

(a) You must have a contractual agreement with the other company that obligates that company to take the following steps:

(1) Meet the emission warranty requirements that apply under § 1060.120. This may involve a separate agreement involving reimbursement of warranty-related expenses.

(2) Report all warranty-related information to the certificate holder.

(b) In your application for certification, identify the company whose trademark you will use and describe the arrangements you have made to meet your requirements under this section.

(c) You remain responsible for meeting all the requirements of this chapter, including warranty and defect-reporting provisions.

EFFECTIVE DATE NOTE: At 86 FR 34532, June 29, 2021, § 1060.640 was removed, effective July 29, 2021.

Subpart H—Averaging, Banking, and Trading Provisions

§ 1060.701 Applicability.

(a) You are allowed to comply with the emission standards in this part with evaporative emission credits only if the exhaust standard-setting part explicitly allows it for evaporative emissions.

(b) The following exhaust standard-setting parts allow some use of evaporative emission credits:

(1) 40 CFR part 1045 for marine vessels.

(2) 40 CFR part 1051 for recreational vehicles.

(3) 40 CFR part 1054 for Small SI equipment.

(c) As specified in 40 CFR part 1048, there is no allowance to generate or use emission credits with Large SI equipment.

§ 1060.705 How do I certify components to an emission level other than the standard under this part or use such components in my equipment?

As specified in this section, a fuel-system component may be certified to a family emission limit (FEL) instead of the otherwise applicable emission standard. Note that the exhaust standard-setting part may apply maximum values for an FEL (i.e., FEL caps).

(a) *Requirements for certifying component manufacturers.* See subpart C of this part for instructions regarding the general requirements for certifying components.

(1) When you submit your application for certification, indicate the FEL to which your components will be certified. This FEL will serve as the applicable standard for your component, and the equipment that uses the component. For example, when the regulations of this part use the phrase ''demonstrate compliance with the applicable emission standard'' it will mean ''demonstrate compliance with the FEL'' for your component.

(2) You may not change the FEL for an emission family. To specify a different FEL for your components, you must send a new application for certification for a new emission family.

(3) Unless your FEL is below all emission standards that could potentially apply, you must ensure that all equipment manufacturers that will use your component are aware of the limitations regarding the conditions under which they may use your component.

(4) It is your responsibility to read the instructions relative to emission-credit provisions in the standard-setting parts identified in § 1060.1.

(b) *Requirements for equipment manufacturers.* See subpart C of this part for instructions regarding your ability to rely on the component manufacturer's certificate.

(1) The FEL of the component will serve as the applicable standard for your equipment.

(2) You may not specify more than one FEL for an emission family at one time; however, you may change the FEL during the model year as described in § 1060.225(f).

(3) If the FEL is above the emission standard you must ensure that the exhaust standard-setting part allows you to use evaporative emission credits to comply with emission standards and that you will have an adequate source of evaporative emission credits. You must certify your equipment as specified in § 1060.201 and the rest of subpart C of this part.

Subpart I—Definitions and Other Reference Information

§ 1060.801 What definitions apply to this part?

The following definitions apply to this part. The definitions apply to all subparts unless we note otherwise. All undefined terms have the meaning the Clean Air Act gives to them. The definitions follow:

Accuracy and precision means the sum of accuracy and repeatability, as defined in 40 CFR 1065.1001. For example, if a measurement device is determined to have an accuracy of ±1% and a repeatability of ±2%, then its accuracy and precision would be ±3%.

Adjustable parameter means any device, system, or element of design that someone can adjust and that, if adjusted, may affect emissions. You may ask us to exclude a parameter if you show us that it will not be adjusted in use in a way that affects emissions.

Applicable emission standard or *applicable standard* means an emission standard to which a fuel-system component is subject. Additionally, if a fuel-system component has been or is being certified to another standard or FEL, *applicable emission standard* means the FEL or other standard to which the fuel-system component has been or is being certified. This definition does not apply to subpart H of this part.

Canister working capacity means the measured amount of hydrocarbon vapor that can be stored in a canister as specified in § 1060.240(e)(2)(i).

Carbon working capacity means the measured amount of hydrocarbon vapor that can be stored in a given volume of carbon when tested according to ASTM D5228 (incorporated by reference in § 1060.810). See § 1060.240(e)(2)(ii).

Certification means relating to the process of obtaining a certificate of conformity for an emission family that complies with the emission standards and requirements in this part.

Certified emission level means the highest official emission result in an emission family.

Clean Air Act means the Clean Air Act, as amended, 42 U.S.C. 7401–7671q.

Cold-weather equipment is limited to the following types of handheld equipment: Chainsaws, cut-off saws, clearing saws, brush cutters with engines at or above 40cc, commercial earth and wood drills, and ice augers. This includes earth augers if they are also marketed as ice augers.

Configuration means a unique combination of hardware (material, geometry, and size) and calibration within an emission family. Units within a single configuration differ only with respect to normal production variability.

Date of manufacture, means one of the following with respect to equipment:

(1) For outboard engines with undercowl fuel tanks and for vessels equipped with outboard engines and installed fuel tanks, *date of manufacture* means the date on which the fuel tank is installed.

(2) For all other equipment, *date of manufacture* has the meaning given in 40 CFR 1068.30.

Days means calendar days unless otherwise specified. For example, when we specify working days we mean calendar days, excluding weekends and U.S. national holidays.

Designated Compliance Officer means the Manager, Heavy-Duty and Nonroad Engine Group (6405-J), U.S. Environmental Protection Agency, 1200 Pennsylvania Ave., NW., Washington, DC 20460.

Detachable fuel line means a fuel line or fuel line assembly intended to be used with a portable nonroad fuel tank and which is connected by special fittings to the fuel tank and/or engine for easy disassembly. Fuel lines that require a wrench or other tools to disconnect are not considered detachable fuel lines. Fuel lines that are labeled or marketed as USCG Type B1 fuel line as specified in 33 CFR 183.540 are not considered detachable fuel lines if they are sold to the ultimate purchaser without quick-connect fittings or similar hardware.

Diurnal emissions means evaporative emissions that occur as a result of venting fuel tank vapors during daily temperature changes while the engine is not operating.

Effective length-to-diameter ratio means the mean vapor path length of a carbon canister divided by the effective diameter of that vapor path. The effective diameter is the diameter of a circle with the same cross-sectional area as the average cross-sectional area of the carbon canister's vapor path.

Emission control system means any device, system, or element of design that controls or reduces the regulated evaporative emissions from a piece of nonroad equipment.

Emission-data unit means a fuel line, fuel tank, fuel system, or fuel-system component that is tested for certification. This includes components tested by EPA.

Emission family has the meaning given in § 1060.230.

Emission-related maintenance means maintenance that substantially affects emissions or is likely to substantially affect emission deterioration.

Equipment means vehicles, marine vessels, and other types of nonroad equipment that are subject to this part's requirements.

Evaporative means relating to fuel emissions that result from permeation of fuel through the fuel-system materials or from ventilation of the fuel system.

Exhaust standard-setting part means the part in the Code of Federal Regulations that contains exhaust emission standards for a particular piece of equipment (or the engine in that piece of equipment). For example, the exhaust standard-setting part for off-highway motorcycles is 40 CFR part 1051. Exhaust standard-setting parts may include evaporative emission requirements or describe how the requirements of this part 1060 apply.

Exposed gasket surface area means the surface area of the gasket inside the fuel tank that is exposed to fuel or fuel vapor. For the purposes of calculating exposed surface area of a gasket, the thickness of the gasket and the outside dimension of the opening being sealed

are used. Gasket overhang into the fuel tank should be ignored for the purpose of this calculation.

Family emission limit (FEL) means an emission level declared by the manufacturer to serve in place of an otherwise applicable emission standard under an ABT program specified by the exhaust standard-setting part. The family emission limit must be expressed to the same number of decimal places as the emission standard it replaces. The family emission limit serves as the emission standard for the emission family with respect to all required testing.

Fuel CE10 has the meaning given in § 1060.515(a).

Fuel line means hoses or tubing designed to contain liquid fuel. The exhaust standard-setting part may further specify which types of hoses and tubing are subject to the standards of this part.

Fuel system means all components involved in transporting, metering, and mixing the fuel from the fuel tank to the combustion chamber(s), including the fuel tank, fuel tank cap, fuel pump, fuel filters, fuel lines, carburetor or fuel-injection components, and all fuel-system vents. In the case where the fuel tank cap or other components (excluding fuel lines) are directly mounted on the fuel tank, they are considered to be a part of the fuel tank.

Fuel type means a general category of fuels such as gasoline or natural gas. There can be multiple grades within a single fuel type, such as premium gasoline, regular gasoline, or gasoline with 10 percent ethanol.

Gasoline means one of the following:

(1) For in-use fuels, *gasoline* means fuel that is commonly and commercially know as gasoline, including ethanol blends.

(2) For testing, *gasoline* has the meaning given in subpart F of this part.

Good engineering judgment means judgments made consistent with generally accepted scientific and engineering principles and all available relevant information. See 40 CFR 1068.5 for the administrative process we use to evaluate good engineering judgment.

High-permeability material means any nonmetal material that does not qualify as low-permeability material.

Installed marine fuel line means a fuel line designed for delivering fuel to a Marine SI engine that does not meet the definition of *portable marine fuel line*.

Installed marine fuel tank means a fuel tank designed for delivering fuel to a Marine SI engine that does not meet the definition of *portable marine fuel tanks*.

Large SI means relating to engines that are subject to evaporative emission standards in 40 CFR part 1048.

Low-permeability material means, for gaskets, a material with permeation emission rates at or below 10 (g-mm)/m^2/day when measured according to SAE J2659 (incorporated by reference in § 1060.810), where the test temperature is 23 °C, the test fuel is Fuel CE10, and testing immediately follows a four-week preconditioning soak with the test fuel.

Manufacture means the physical and engineering process of designing, constructing, and assembling an engine, piece of nonroad equipment, or fuel-system components subject to the requirements of this part.

Manufacturer has the meaning given in section 216(1) of the Clean Air Act (42 U.S.C. 7550(1)). In general, this term includes:

(1) Any person who manufactures an engine or piece of nonroad equipment for sale in the United States or otherwise introduces a new nonroad engine or a piece of new nonroad equipment into U.S. commerce.

(2) Any person who manufactures a fuel-system component for an engine subject to the requirements of this part as described in § 1060.1(a).

(3) Importers who import such products into the United States.

Marine SI means relating to vessels powered by engines that are subject to exhaust emission standards in 40 CFR part 1045.

Marine vessel has the meaning given in 40 CFR § 1045.801, which generally includes all nonroad equipment used as a means of transportation on water.

Model year means one of the following things:

(1) For equipment defined as ''new nonroad equipment'' under paragraph (1) of the definition of ''new nonroad engine,'' model year means one of the following:

(i) Calendar year.

(ii) Your annual new model production period if it is different than the calendar year. This must include January 1 of the calendar year for which the model year is named. It may not begin before January 2 of the previous calendar year and it must end by December 31 of the named calendar year.

(2) For other equipment defined as ''new nonroad equipment'' under paragraph (2) of the definition of ''new nonroad engine,'' model year has the meaning given in the exhaust standard-setting part.

(3) For other equipment defined as ''new nonroad equipment'' under paragraph (3) or paragraph (4) of the definition of ''new nonroad engine,'' model year means the model year of the engine as defined in the exhaust standard-setting part.

New nonroad equipment means equipment meeting one or more of the following criteria:

(1) Nonroad equipment for which the ultimate purchaser has never received the equitable or legal title. The equipment is no longer new when the ultimate purchaser receives this title or the product is placed into service, whichever comes first.

(2) Nonroad equipment that is defined as new under the exhaust standard-setting part. (Note: equipment that is not defined as new under the exhaust standard-setting part may be defined as new under this definition of ''new nonroad equipment.'')

(3) Nonroad equipment with an engine that becomes new (as defined in the exhaust standard-setting part) while installed in the equipment. The equipment is no longer new when it is subsequently placed into service. This paragraph (3) does not apply if the engine becomes new before being installed in the equipment.

(4) Nonroad equipment not covered by a certificate of conformity issued under this part at the time of importation and manufactured after the requirements of this part start to apply (see §1060.1). The equipment is no longer new when it is subsequently placed into service. Importation of this kind of new nonroad equipment is generally prohibited by 40 CFR part 1068.

Nominal capacity means a fuel tank's volume as specified by the fuel tank manufacturer, using at least two significant figures, based on the maximum volume of fuel the tank can hold with standard refueling techniques.

Nonroad engine has the meaning we give in 40 CFR 1068.30. In general this means all internal-combustion engines except motor vehicle engines, stationary engines, engines used solely for competition, or engines used in aircraft. This part does not apply to all nonroad engines (see §1060.1).

Nonroad equipment means a piece of equipment that is powered by or intended to be powered by one or more nonroad engines. Note that §§1060.5 and 1060.601 describes how we treat outboard engines, portable marine fuel tanks, and associated fuel-system components as nonroad equipment under this part 1060.

Nontrailerable boat means a vessel whose length is 26.0 feet or more, or whose width is more than 8.5 feet.

Official emission result means the measured emission rate for an emission-data unit.

Placed into service means put into initial use for its intended purpose.

Portable marine fuel line means a detachable fuel line that is used or intended to be used to supply fuel to a marine engine during operation. This also includes any fuel line labeled or marketed at USCG Type B1 fuel line as specified in 33 CFR 183.540, whether or not it includes detachable connecting hardware; this is often called universal fuel line.

Portable marine fuel tank means a portable fuel tank that is used or intended to be used to supply fuel to a marine engine during operation.

Portable nonroad fuel tank means a fuel tank that meets each of the following criteria:

(1) It has design features indicative of use in portable applications, such as a carrying handle and fuel line fitting that can be readily attached to and detached from a nonroad engine.

(2) It has a nominal fuel capacity of 12 gallons or less.

(3) It is designed to supply fuel to an engine while the engine is operating.

(4) It is not used or intended to be used to supply fuel to a marine engine.

Production period means the period in which a component or piece of equipment will be produced under a certificate of conformity. A given production period for an emission family may not include components certified using different test data. A production period may not exceed five years for certified components. Note that the definition of model year includes specifications related to production periods for which a certificate is valid for equipment.

Recreational vehicle means vehicles that are subject to evaporative emission standards in 40 CFR part 1051. This generally includes engines that will be installed in recreational vehicles if the engines are certified separately under 40 CFR 1051.20.

Relating to as used in this section means relating to something in a specific, direct manner. This expression is used in this section only to define terms as adjectives and not to broaden the meaning of the terms.

Revoke has the meaning given in 40 CFR 1068.30. If we revoke a certificate or an exemption, you must apply for a new certificate or exemption before continuing to introduce the affected equipment into U.S. commerce.

Round means to round numbers according to standard procedures as specified in 40 CFR 1065.1001.

Running loss emissions means unburned fuel vapor that escapes from the fuel system to the ambient atmosphere while the engine is operating, excluding permeation emissions and diurnal emissions. Running loss emissions generally result from fuel-temperature increases caused by heat released from in-tank fuel pumps, fuel recirculation, or proximity to heat sources such as the engine or exhaust components.

Sealed means lacking openings to the atmosphere that would allow a measurable amount of liquid or vapor to leak out under normal operating pressures or other pressures specified in this part. For example, you may generally establish a maximum value for operating pressures based on the highest pressure you would observe from an installed fuel tank during continuous equipment operation on a sunny day with ambient temperatures of 35 °C. A fuel system may be considered to have no measurable leak if it does not release bubbles when held underwater at the identified tank pressure for 60 seconds. This determination presumes the use of good engineering judgment; for example, it would not be appropriate to test the fuel tank such that small leaks would avoid detection by collecting in a cavity created by holding the tank with a certain orientation. Sealed fuel systems may have openings for emission controls or for fuel lines needed to route fuel to the engine.

Small SI means relating to engines that are subject to emission standards in 40 CFR part 90 or 1054.

Structurally integrated nylon fuel tank means a fuel tank having all the following characteristics:

(1) The fuel tank is made of a polyamide material that does not contain more than 50 percent by weight of a reinforcing glass fiber or mineral filler and does not contain more than 10 percent by weight of impact modified polyamides that use rubberized agents such as EPDM rubber.

(2) The fuel tank must be used in a cut-off saw or chainsaw or be integrated into a major structural member where, as a single component, the fuel tank material is a primary structural/stress member for other major components such as the engine, transmission, or cutting attachment.

Subchapter U means 40 CFR parts 1000 through 1299.

Suspend has the meaning given in 40 CFR 1068.30. If we suspend a certificate, you may not introduce into U.S. commerce equipment from that emission family unless we reinstate the certificate or approve a new one. If we suspend an exemption, you may not introduce into U.S. commerce equipment that was previously covered by the exemption unless we reinstate the exemption.

Tare means to use a container or other reference mass to zero a balance before weighing a sample. Generally, this means placing the container or reference mass on the balance, allowing it to stabilize, then zeroing the balance without removing the container or reference mass. This allows you to

use the balance to determine the difference in mass between the sample and the container or reference mass.

Test sample means the collection of fuel lines, fuel tanks, or fuel systems selected from the population of an emission family for emission testing. This may include certification testing or any kind of confirmatory testing.

Test unit means a piece of fuel line, a fuel tank, or a fuel system in a test sample.

Ultimate purchaser means, with respect to any new nonroad equipment, the first person who in good faith purchases such new nonroad equipment for purposes other than resale.

Ultraviolet light means electromagnetic radiation with a wavelength between 300 and 400 nanometers.

United States has the meaning given in 40 CFR 1068.30.

U.S.-directed production volume means the amount of equipment, subject to the requirements of this part, produced by a manufacturer for which the manufacturer has a reasonable assurance that sale was or will be made to ultimate purchasers in the United States.

Useful life means the period during which new nonroad equipment is required to comply with all applicable emission standards. See § 1060.101.

Void has the meaning given in 40 CFR 1068.30. In general this means to invalidate a certificate or an exemption both retroactively and prospectively.

Volatile liquid fuel means any fuel other than diesel or biodiesel that is a liquid at atmospheric pressure and has a Reid Vapor Pressure higher than 2.0 pounds per square inch.

We (us, our) means the Administrator of the Environmental Protection Agency and any authorized representatives.

Wintertime equipment means equipment using a wintertime engine, as defined in 40 CFR 1054.801. Note this definition applies only for Small SI equipment.

[73 FR 59298, Oct. 8, 2008, as amended at 75 FR 23027, Apr. 30, 2010]

EFFECTIVE DATE NOTE: At 86 FR 34532, June 29, 2021, § 1060.801 was amended, effective July 29, 2021.

§ 1060.805 What symbols, acronyms, and abbreviations does this part use?

The following symbols, acronyms, and abbreviations apply to this part:

° degree.
ASTM American Society for Testing and Materials.
C Celsius.
CFR Code of Federal Regulations.
EPA Environmental Protection Agency.
FEL family emission limit.
g gram.
gal gallon.
hr hour.
in inch.
kPa kilopascal.
kW kilowatt.
L liter.
m meter.
min minute.
mm millimeter.
psig pounds per square inch of gauge pressure.
SAE Society of Automotive Engineers.
SHED Sealed Housing for Evaporative Determination.
U.S. United States.
U.S.C. United States Code.
W watt.

§ 1060.810 What materials does this part reference?

(a) *Materials incorporated by reference.* Certain material is incorporated by reference into this part with the approval of the Director of the Federal Register under 5 U.S.C. 552(a) and 1 CFR part 51. To enforce any edition other than that specified in this section, a document must be published in the FEDERAL REGISTER and the material must be available to the public. All approved material is available for inspection at U.S. EPA, Air and Radiation Docket and Information Center, 1301 Constitution Ave. NW., Room B102, EPA West Building, Washington, DC 20460, (202) 202–1744, and is available from the sources listed below. It is also available for inspection at the National Archives and Records Administration (NARA). For information on the availability of this material at NARA, call 202–741–6030, or go to *http://www.archives.gov/federal_register/*

code_of_federal_regulations/ibr_locations.html.

(b) *ASTM International material.* The following standards are available from ASTM International, 100 Barr Harbor Drive, P.O. Box C700, West Conshohocken, PA, 19428–2959, (610) 832–9585, or *http://www.astm.org/:*

(1) ASTM D471–06, Standard Test Method for Rubber Property—Effect of Liquids, approved October 1, 2006 (''ASTM D471''), IBR approved for § 1060.515(a).

(2) ASTM D2862–97 (Reapproved 2004), Standard Test Method for Particle Size Distribution of Granular Activated Carbon, approved April 1, 2004 (''ASTM D2862''), IBR approved for § 1060.240(e).

(3) ASTM D3802–79 (Reapproved 2005), Standard Test Method for Ball-Pan Hardness of Activated Carbon, approved October 1, 2005 (''ASTM D3802''), IBR approved for § 1060.240(e).

(4) ASTM D4806–07, Standard Specification for Denatured Fuel Ethanol for Blending with Gasolines for Use as Automotive Spark-Ignition Engine Fuel, approved July 15, 2007 (''ASTM D4806''), IBR approved for § 1060.501(c).

(5) ASTM D5228–92 (Reapproved 2005), Standard Test Method for Determination of Butane Working Capacity of Activated Carbon, approved October 1, 2005 (''ASTM D5228''), IBR approved for § 1060.801.

(c) *SAE International material.* The following standards are available from SAE International, 400 Commonwealth Dr., Warrendale, PA 15096–0001, (877) 606–7323 (U.S. and Canada) or (724) 776–4970 (outside the U.S. and Canada), or *http://www.sae.org:*

(1) SAE J30, Fuel and Oil Hoses, Revised June 1998, IBR approved for § 1060.515(c).

(2) SAE J1527, Marine Fuel Hoses, Revised February 1993, IBR approved for § 1060.515(c).

(3) SAE J2260, Nonmetallic Fuel System Tubing with One or More Layers, Revised November 2004, IBR approved for § 1060.510.

(4) SAE J2659, Test Method to Measure Fluid Permeation of Polymeric Materials by Speciation, Issued December 2003, IBR approved for § 1060.801.

(5) SAE J2996, Surface Vehicle Recommended Practice, Small Diameter Fuel Line Permeation Test Procedure, Issued January 2013, IBR approved for § 1060.515(d).

(d) *California Air Resources Board.* The following documents are available from the California Air Resources Board, 1001 I Street, Sacramento, CA, 95812, (916) 322–2884, or *http://www.arb.ca.gov:*

(1) Final Regulation Order, Article 1, Chapter 15, Division 3, Title 13, California Code of Regulations, July 26, 2004, IBR approved for § 1060.105(e), and 1060.240(e).

(2) [Reserved]

(e) *American Boat and Yacht Council Material.* The following documents are available from the American Boat and Yacht Council, 613 Third Street, Suite 10, Annapolis, MD 21403 or (410) 990–4460 or *http://www.abycinc.org/:*

(1) ABYC H–25, Portable Marine Gasoline Fuel Systems, July 2010, IBR approved for § 1060.105(f).

(2) [Reserved]

[80 FR 9117, Feb. 19, 2015]

EFFECTIVE DATE NOTE: At 86 FR 34533, June 29, 2021, § 1060.810 was amended, effective July 29, 2021.

§ 1060.815 What provisions apply to confidential information?

(a) Clearly show what you consider confidential by marking, circling, bracketing, stamping, or some other method.

(b) We will store your confidential information as described in 40 CFR part 2. Also, we will disclose it only as specified in 40 CFR part 2. This applies both to any information you send us and to any information we collect from inspections, audits, or other site visits.

(c) If you send us a second copy without the confidential information, we will assume it contains nothing confidential whenever we need to release information from it.

(d) If you send us information without claiming it is confidential, we may make it available to the public without further notice to you, as described in 40 CFR 2.204.

EFFECTIVE DATE NOTE: At 86 FR 34533, June 29, 2021, § 1060.815 was revised, effective July 29, 2021.

§ 1060.820 How do I request a hearing?

(a) You may request a hearing under certain circumstances as described

elsewhere in this part. To do this, you must file a written request, including a description of your objection and any supporting data, within 30 days after we make a decision.

(b) For a hearing you request under the provisions of this part, we will approve your request if we find that your request raises a substantial factual issue.

(c) If we agree to hold a hearing, we will use the procedures specified in 40 CFR part 1068, subpart G.

§ 1060.825 What reporting and recordkeeping requirements apply under this part?

Under the Paperwork Reduction Act (44 U.S.C. 3501 *et seq*), the Office of Management and Budget approves the reporting and recordkeeping specified in the applicable regulations. The following items illustrate the kind of reporting and recordkeeping we require for products regulated under this part:

(a) We specify the following requirements related to equipment certification in this part 1060:

(1) In 40 CFR 1060.20 we give an overview of principles for reporting information.

(2) In 40 CFR part 1060, subpart C, we identify a wide range of information required to certify engines.

(3) In 40 CFR 1060.301 we require manufacturers to make engines or equipment available for our testing if we make such a request.

(4) In 40 CFR 1060.505 we specify information needs for establishing various changes to published test procedures.

(b) We specify the following requirements related to the general compliance provisions in 40 CFR part 1068:

(1) In 40 CFR 1068.5 we establish a process for evaluating good engineering judgment related to testing and certification.

(2) In 40 CFR 1068.25 we describe general provisions related to sending and keeping information.

(3) In 40 CFR 1068.27 we require manufacturers to make equipment available for our testing or inspection if we make such a request.

(4) In 40 CFR 1068.105 we require equipment manufacturers to keep certain records related to duplicate labels from engine manufacturers.

(5) [Reserved]

(6) In 40 CFR part 1068, subpart C, we identify several reporting and recordkeeping items for making demonstrations and getting approval related to various exemptions.

(7) In 40 CFR part 1068, subpart D, we identify several reporting and recordkeeping items for making demonstrations and getting approval related to importing equipment.

(8) In 40 CFR 1068.450 and 1068.455 we specify certain records related to testing production-line products in a selective enforcement audit.

(9) In 40 CFR 1068.501 we specify certain records related to investigating and reporting emission-related defects.

(10) In 40 CFR 1068.525 and 1068.530 we specify certain records related to recalling nonconforming equipment.

EFFECTIVE DATE NOTE: At 86 FR 34533, June 29, 2021, § 1060.825 was revised, effective July 29, 2021.

PART 1065—ENGINE-TESTING PROCEDURES

Subpart A—Applicability and General Provisions

Sec.

1065.1 Applicability.
1065.2 Submitting information to EPA under this part.
1065.5 Overview of this part 1065 and its relationship to the standard-setting part.
1065.10 Other procedures.
1065.12 Approval of alternate procedures.
1065.15 Overview of procedures for laboratory and field testing.
1065.20 Units of measure and overview of calculations.
1065.25 Recordkeeping.

Subpart B—Equipment Specifications

1065.101 Overview.
1065.110 Work inputs and outputs, accessory work, and operator demand.
1065.120 Fuel properties and fuel temperature and pressure.
1065.122 Engine cooling and lubrication.
1065.125 Engine intake air.
1065.127 Exhaust gas recirculation.
1065.130 Engine exhaust.
1065.140 Dilution for gaseous and PM constituents.
1065.145 Gaseous and PM probes, transfer lines, and sampling system components.
1065.150 Continuous sampling.
1065.170 Batch sampling for gaseous and PM constituents.

1065.190 PM-stabilization and weighing environments for gravimetric analysis.
1065.195 PM-stabilization environment for in-situ analyzers.

Subpart C—Measurement Instruments

1065.201 Overview and general provisions.
1065.202 Data updating, recording, and control.
1065.205 Performance specifications for measurement instruments.

MEASUREMENT OF ENGINE PARAMETERS AND AMBIENT CONDITIONS

1065.210 Work input and output sensors.
1065.215 Pressure transducers, temperature sensors, and dewpoint sensors.

FLOW-RELATED MEASUREMENTS

1065.220 Fuel flow meter.
1065.225 Intake-air flow meter.
1065.230 Raw exhaust flow meter.
1065.240 Dilution air and diluted exhaust flow meters.
1065.245 Sample flow meter for batch sampling.
1065.247 Diesel exhaust fluid flow rate.
1065.248 Gas divider.

CO AND CO_2 MEASUREMENTS

1065.250 Nondispersive infrared analyzer.

HYDROCARBON MEASUREMENTS

1065.260 Flame ionization detector.
1065.265 Nonmethane cutter.
1065.266 Fourier transform infrared analyzer.
1065.267 Gas chromatograph with a flame ionization detector.
1065.269 Photoacoustic analyzer for ethanol and methanol.

NO_X AND N_2O MEASUREMENTS

1065.270 Chemiluminescent detector.
1065.272 Nondispersive ultraviolet analyzer.
1065.275 N_2O measurement devices.

O_2 MEASUREMENTS

1065.280 Paramagnetic and magnetopneumatic O_2 detection analyzers.

AIR-TO-FUEL RATIO MEASUREMENTS

1065.284 Zirconia (ZrO_2) analyzer.

PM MEASUREMENTS

1065.290 PM gravimetric balance.
1065.295 PM inertial balance for field-testing analysis.

Subpart D—Calibrations and Verifications

1065.301 Overview and general provisions.
1065.303 Summary of required calibration and verifications.
1065.305 Verifications for accuracy, repeatability, and noise.
1065.307 Linearity verification.
1065.308 Continuous gas analyzer system-response and updating-recording verification—for gas analyzers not continuously compensated for other gas species.
1065.309 Continuous gas analyzer system-response and updating-recording verification—for gas analyzers continuously compensated for other gas species.

MEASUREMENT OF ENGINE PARAMETERS AND AMBIENT CONDITIONS

1065.310 Torque calibration.
1065.315 Pressure, temperature, and dewpoint calibration.

FLOW-RELATED MEASUREMENTS

1065.320 Fuel-flow calibration.
1065.325 Intake-flow calibration.
1065.330 Exhaust-flow calibration.
1065.340 Diluted exhaust flow (CVS) calibration.
1065.341 CVS, PFD, and batch sampler verification (propane check).
1065.342 Sample dryer verification.
1065.345 Vacuum-side leak verification.

CO AND CO_2 MEASUREMENTS

1065.350 H_2O interference verification for CO_2 NDIR analyzers.
1065.355 H_2O and CO_2 interference verification for CO NDIR analyzers.

HYDROCARBON MEASUREMENTS

1065.360 FID optimization and verification.
1065.362 Non-stoichiometric raw exhaust FID O_2 interference verification.
1065.365 Nonmethane cutter penetration fractions.
1065.366 Interference verification for FTIR analyzers.
1065.369 H_2O, CO, and CO_2 interference verification for photoacoustic alcohol analyzers.

NO_X AND N_2O MEASUREMENTS

1065.370 CLD CO_2 and H_2O quench verification.
1065.372 NDUV analyzer HC and H_2O interference verification.
1065.375 Interference verification for N_2O analyzers.
1065.376 Chiller NO_2 penetration.
1065.378 NO_2-to-NO converter conversion verification.

PM MEASUREMENTS

1065.390 PM balance verifications and weighing process verification.
1065.395 Inertial PM balance verifications.

Subpart E—Engine Selection, Preparation, and Maintenance

1065.401 Test engine selection.
1065.405 Test engine preparation and maintenance.
1065.410 Maintenance limits for stabilized test engines.
1065.415 Durability demonstration.

Subpart F—Performing an Emission Test Over Specified Duty Cycles

1065.501 Overview.
1065.510 Engine mapping.
1065.512 Duty cycle generation.
1065.514 Cycle-validation criteria for operation over specified duty cycles.
1065.516 Sample system decontamination and preconditioning.
1065.518 Engine preconditioning.
1065.520 Pre-test verification procedures and pre-test data collection.
1065.525 Engine starting, restarting, and shutdown.
1065.526 Repeating of void modes or test intervals.
1065.530 Emission test sequence.
1065.543 Carbon balance error verification.
1065.545 Verification of proportional flow control for batch sampling.
1065.546 Verification of minimum dilution ratio for PM batch sampling.
1065.550 Gas analyzer range verification and drift verification.
1065.590 PM sampling media (e.g., filters) preconditioning and tare weighing.
1065.595 PM sample post-conditioning and total weighing.

Subpart G—Calculations and Data Requirements

1065.601 Overview.
1065.602 Statistics.
1065.610 Duty cycle generation.
1065.630 Local acceleration of gravity.
1065.640 Flow meter calibration calculations.
1065.642 PDP, SSV, and CFV molar flow rate calculations.
1065.643 Carbon balance error verification calculations.
1065.644 Vacuum-decay leak rate.
1065.645 Amount of water in an ideal gas.
1065.650 Emission calculations.
1065.655 Chemical balances of fuel, intake air, and exhaust.
1065.659 Removed water correction.
1065.660 THC, NMHC, NMNEHC, CH_4, and C_2H_6 determination.
1065.665 THCE and NMHCE determination.
1065.667 Dilution air background emission correction.
1065.670 NO_X intake-air humidity and temperature corrections.
1065.672 Drift correction.
1065.675 CLD quench verification calculations.
1065.680 Adjusting emission levels to account for infrequently regenerating aftertreatment devices.
1065.690 Buoyancy correction for PM sample media.
1065.695 Data requirements.

Subpart H—Engine Fluids, Test Fuels, Analytical Gases and Other Calibration Standards

1065.701 General requirements for test fuels.
1065.703 Distillate diesel fuel.
1065.705 Residual and intermediate residual fuel.
1065.710 Gasoline.
1065.715 Natural gas.
1065.720 Liquefied petroleum gas.
1065.725 High-level ethanol-gasoline blends.
1065.735 Diesel exhaust fluid.
1065.740 Lubricants.
1065.745 Coolants.
1065.750 Analytical gases.
1065.790 Mass standards.

Subpart I—Testing with Oxygenated Fuels

1065.801 Applicability.
1065.805 Sampling system.
1065.845 Response factor determination.
1065.850 Calculations.

Subpart J—Field Testing and Portable Emission Measurement Systems

1065.901 Applicability.
1065.905 General provisions.
1065.910 PEMS auxiliary equipment for field testing.
1065.915 PEMS instruments.
1065.920 PEMS calibrations and verifications.
1065.925 PEMS preparation for field testing.
1065.930 Engine starting, restarting, and shutdown.
1065.935 Emission test sequence for field testing.
1065.940 Emission calculations.

Subpart K—Definitions and Other Reference Information

1065.1001 Definitions.
1065.1005 Symbols, abbreviations, acronyms, and units of measure.
1065.1010 Incorporation by reference.

Subpart L—Methods for Unregulated and Special Pollutants

1065.1101 Applicability.
1065.1102 Semi-Volatile Organic Compounds
1065.1103 General provisions for SVOC measurement.
1065.1105 Sampling system design.

1065.1107 Sample media and sample system preparation; sampler assembly.
1065.1109 Post-test sampler disassembly and sample extraction.
1065.1111 Sample analysis.

AUTHORITY: 42 U.S.C. 7401–7671q.

SOURCE: 70 FR 40516, July 13, 2005, unless otherwise noted.

Subpart A—Applicability and General Provisions

§ 1065.1 Applicability.

(a) This part describes the procedures that apply to testing we require for the following engines or for vehicles using the following engines:

(1) Locomotives we regulate under 40 CFR part 1033. For earlier model years, manufacturers may use the test procedures in this part or those specified in 40 CFR part 92 according to § 1065.10.

(2) Model year 2010 and later heavy-duty highway engines we regulate under 40 CFR part 86. For earlier model years, manufacturers may use the test procedures in this part or those specified in 40 CFR part 86, subpart N, according to § 1065.10.

(3) Nonroad diesel engines we regulate under 40 CFR part 1039 and stationary compression-ignition engines that are certified to the standards in 40 CFR part 1039, as specified in 40 CFR part 60, subpart IIII. For earlier model years, manufacturers may use the test procedures in this part or those specified in 40 CFR part 89 according to § 1065.10.

(4) Marine diesel engines we regulate under 40 CFR part 1042 and stationary compression-ignition engines that are certified to the standards in 40 CFR part 1042, as specified in 40 CFR part 60, subpart IIII. For earlier model years, manufacturers may use the test procedures in this part or those specified in 40 CFR part 94 according to § 1065.10.

(5) Marine spark-ignition engines we regulate under 40 CFR part 1045. For earlier model years, manufacturers may use the test procedures in this part or those specified in 40 CFR part 91 according to § 1065.10.

(6) Large nonroad spark-ignition engines we regulate under 40 CFR part 1048, and stationary engines that are certified to the standards in 40 CFR part 1048 or as otherwise specified in 40 CFR part 60, subpart JJJJ.

(7) Vehicles we regulate under 40 CFR part 1051 (such as snowmobiles and off-highway motorcycles) based on engine testing. See 40 CFR part 1051, subpart F, for standards and procedures that are based on vehicle testing.

(8) Small nonroad spark-ignition engines we regulate under 40 CFR part 1054 and stationary engines that are certified to the standards in 40 CFR part 1054 as specified in 40 CFR part 60, subpart JJJJ. For earlier model years, manufacturers may use the test procedures in this part or those specified in 40 CFR part 90 according to § 1065.10.

(b) The procedures of this part may apply to other types of engines, as described in this part and in the standard-setting part.

(c) The term ''you'' means anyone performing testing under this part other than EPA.

(1) This part is addressed primarily to manufacturers of engines, vehicles, equipment, and vessels, but it applies equally to anyone who does testing under this part for such manufacturers.

(2) This part applies to any manufacturer or supplier of test equipment, instruments, supplies, or any other goods or services related to the procedures, requirements, recommendations, or options in this part.

(d) Paragraph (a) of this section identifies the parts of the CFR that define emission standards and other requirements for particular types of engines. In this part, we refer to each of these other parts generically as the ''standard-setting part.'' For example, 40 CFR part 1051 is always the standard-setting part for snowmobiles. Note that while 40 CFR part 86 is the standard-setting part for heavy-duty highway engines, this refers specifically to 40 CFR part 86, subpart A, and to certain portions of 40 CFR part 86, subpart N, as described in 40 CFR 86.1301.

(e) Unless we specify otherwise, the terms ''procedures'' and ''test procedures'' in this part include all aspects of engine testing, including the equipment specifications, calibrations, calculations, and other protocols and procedural specifications needed to measure emissions.

(f) For vehicles, equipment, or vessels subject to this part and regulated under vehicle-based, equipment-based, or vessel-based standards, use good engineering judgment to interpret the term ''engine'' in this part to include vehicles, equipment, or vessels, where appropriate.

(g) For additional information regarding these test procedures, visit our Web site at *http://www.epa.gov*, and in particular *http://www.epa.gov/nvfel/testing/regulations.htm*.

(h) This part describes procedures and specifications for measuring an engine's exhaust emissions. While the measurements are geared toward engine-based measurements (in units of g/kW · hr), many of these provisions apply equally to vehicle-based measurements (in units of g/mile or g/kilometer). 40 CFR part 1066 describes the analogous procedures for vehicle-based emission measurements, and in many cases states that specific provisions of this part 1065 also apply for those vehicle-based measurements. Where material from this part 1065 applies for vehicle-based measurements under 40 CFR part 1066, it is sometimes necessary to include parenthetical statements in this part 1065 to properly cite secondary references that are different for vehicle-based testing. See 40 CFR part 1066 and the standard-setting part for additional information.

[73 FR 37288, June 30, 2008, as amended at 73 FR 59321, Oct. 8, 2008; 75 FR 23028, Apr. 30, 2010; 76 FR 37977, June 28, 2011; 76 FR 57437, Sept. 15, 2011; 79 FR 23752, Apr. 28, 2014]

EFFECTIVE DATE NOTE: At 86 FR 34533, June 29, 2021, §1065.1 was amended, effective July 29, 2021.

§1065.2 Submitting information to EPA under this part.

(a) You are responsible for statements and information in your applications for certification, requests for approved procedures, selective enforcement audits, laboratory audits, production-line test reports, field test reports, or any other statements you make to us related to this part 1065. If you provide statements or information to someone for submission to EPA, you are responsible for these statements and information as if you had submitted them to EPA yourself.

(b) In the standard-setting part and in 40 CFR 1068.101, we describe your obligation to report truthful and complete information and the consequences of failing to meet this obligation. *See* also 18 U.S.C. 1001 and 42 U.S.C. 7413(c)(2). This obligation applies whether you submit this information directly to EPA or through someone else.

(c) We may void any certificates or approvals associated with a submission of information if we find that you intentionally submitted false, incomplete, or misleading information. For example, if we find that you intentionally submitted incomplete information to mislead EPA when requesting approval to use alternate test procedures, we may void the certificates for all engines families certified based on emission data collected using the alternate procedures. This would also apply if you ignore data from incomplete tests or from repeat tests with higher emission results.

(d) We may require an authorized representative of your company to approve and sign the submission, and to certify that all the information submitted is accurate and complete. This includes everyone who submits information, including manufacturers and others.

(e) See 40 CFR 1068.10 for provisions related to confidential information. Note however that under 40 CFR 2.301, emission data are generally not eligible for confidential treatment.

(f) Nothing in this part should be interpreted to limit our ability under Clean Air Act section 208 (42 U.S.C. 7542) to verify that engines conform to the regulations.

[73 FR 37289, June 30, 2008, as amended at 75 FR 23028, Apr. 30, 2010; 79 FR 23752, Apr. 28, 2014]

EFFECTIVE DATE NOTE: At 86 FR 34533, June 29, 2021, §1065.2 was amended, effective July 29, 2021.

§1065.5 Overview of this part 1065 and its relationship to the standard-setting part.

(a) This part specifies procedures that apply generally to testing various categories of engines. See the standard-setting part for directions in applying specific provisions in this part for a

particular type of engine. Before using this part's procedures, read the standard-setting part to answer at least the following questions:

(1) What duty cycles must I use for laboratory testing?

(2) Should I warm up the test engine before measuring emissions, or do I need to measure cold-start emissions during a warm-up segment of the duty cycle?

(3) Which exhaust constituents do I need to measure? Measure all exhaust constituents that are subject to emission standards, any other exhaust constituents needed for calculating emission rates, and any additional exhaust constituents as specified in the standard-setting part. Alternatively, you may omit the measurement of N_2O and CH_4 for an engine, provided it is not subject to an N_2O or CH_4 emission standard. If you omit the measurement of N_2O and CH_4, you must provide other information and/or data that will give us a reasonable basis for estimating the engine's emission rates.

(4) Do any unique specifications apply for test fuels?

(5) What maintenance steps may I take before or between tests on an emission-data engine?

(6) Do any unique requirements apply to stabilizing emission levels on a new engine?

(7) Do any unique requirements apply to test limits, such as ambient temperatures or pressures?

(8) Is field testing required or allowed, and are there different emission standards or procedures that apply to field testing?

(9) Are there any emission standards specified at particular engine-operating conditions or ambient conditions?

(10) Do any unique requirements apply for durability testing?

(b) The testing specifications in the standard-setting part may differ from the specifications in this part. In cases where it is not possible to comply with both the standard-setting part and this part, you must comply with the specifications in the standard-setting part. The standard-setting part may also allow you to deviate from the procedures of this part for other reasons.

(c) The following table shows how this part divides testing specifications into subparts:

TABLE 1 OF § 1065.5—DESCRIPTION OF PART 1065 SUBPARTS

This subpart	Describes these specifications or procedures
Subpart A	Applicability and general provisions.
Subpart B	Equipment for testing.
Subpart C	Measurement instruments for testing.
Subpart D	Calibration and performance verifications for measurement systems.
Subpart E	How to prepare engines for testing, including service accumulation.
Subpart F	How to run an emission test over a predetermined duty cycle.
Subpart G	Test procedure calculations.
Subpart H	Fuels, engine fluids, analytical gases, and other calibration standards.
Subpart I	Special procedures related to oxygenated fuels.
Subpart J	How to test with portable emission measurement systems (PEMS).

[73 FR 37289, June 30, 2008, as amended at 74 FR 56511, Oct. 30, 2009]

§ 1065.10 Other procedures.

(a) *Your testing*. The procedures in this part apply for all testing you do to show compliance with emission standards, with certain exceptions noted in this section. In some other sections in this part, we allow you to use other procedures (such as less precise or less accurate procedures) if they do not affect your ability to show that your engines comply with the applicable emission standards. This generally requires emission levels to be far enough below the applicable emission standards so that any errors caused by greater imprecision or inaccuracy do not affect your ability to state unconditionally that the engines meet all applicable emission standards.

(b) *Our testing*. These procedures generally apply for testing that we do to determine if your engines comply with applicable emission standards. We may

perform other testing as allowed by the Act.

(c) *Exceptions.* We may allow or require you to use procedures other than those specified in this part in the following cases, which may apply to laboratory testing, field testing, or both. We intend to publicly announce when we allow or require such exceptions. All of the test procedures noted here as exceptions to the specified procedures are considered generically as ''other procedures.'' Note that the terms ''special procedures'' and ''alternate procedures'' have specific meanings; ''special procedures'' are those allowed by §1065.10(c)(2) and ''alternate procedures'' are those allowed by §1065.10(c)(7).

(1) The objective of the procedures in this part is to produce emission measurements equivalent to those that would result from measuring emissions during in-use operation using the same engine configuration as installed in a vehicle, equipment, or vessel. However, in unusual circumstances where these procedures may result in measurements that do not represent in-use operation, you must notify us if good engineering judgment indicates that the specified procedures cause unrepresentative emission measurements for your engines. Note that you need not notify us of unrepresentative aspects of the test procedure if measured emissions are equivalent to in-use emissions. This provision does not obligate you to pursue new information regarding the different ways your engine might operate in use, nor does it obligate you to collect any other in-use information to verify whether or not these test procedures are representative of your engine's in-use operation. If you notify us of unrepresentative procedures under this paragraph (c)(1), we will cooperate with you to establish whether and how the procedures should be appropriately changed to result in more representative measurements. While the provisions of this paragraph (c)(1) allow us to be responsive to issues as they arise, we would generally work toward making these testing changes generally applicable through rulemaking. We will allow reasonable lead time for compliance with any resulting change in procedures. We will consider the following factors in determining the importance of pursuing changes to the procedures:

(i) Whether supplemental emission standards or other requirements in the standard-setting part address the type of operation of concern or otherwise prevent inappropriate design strategies.

(ii) Whether the unrepresentative aspect of the procedures affects your ability to show compliance with the applicable emission standards.

(iii) The extent to which the established procedures require the use of emission-control technologies or strategies that are expected to ensure a comparable degree of emission control under the in-use operation that differs from the specified procedures.

(2) You may request to use special procedures if your engine cannot be tested using the specified procedures. For example, this may apply if your engine cannot operate on the specified duty cycle. In this case, tell us in writing why you cannot satisfactorily test your engine using this part's procedures and ask to use a different approach. We will approve your request if we determine that it would produce emission measurements that represent in-use operation and we determine that it can be used to show compliance with the requirements of the standard-setting part. Where we approve special procedures that differ substantially from the specified procedures, we may preclude you from participating in averaging, banking, and trading with the affected engine families.

(3) In a given model year, you may use procedures required for later model year engines without request. If you upgrade your testing facility in stages, you may rely on a combination of procedures for current and later model year engines as long as you can ensure, using good engineering judgment, that the combination you use for testing does not affect your ability to show compliance with the applicable emission standards.

(4) In a given model year, you may ask to use procedures allowed for earlier model year engines. We will approve this only if you show us that using the procedures allowed for earlier

model years does not affect your ability to show compliance with the applicable emission standards.

(5) You may ask to use emission data collected using other procedures, such as those of the California Air Resources Board or the International Organization for Standardization. We will approve this only if you show us that using these other procedures does not affect your ability to show compliance with the applicable emission standards.

(6) During the 12 months following the effective date of any change in the provisions of this part 1065 (and 40 CFR part 1066 for vehicle testing), you may use data collected using procedures specified in the previously applicable version of this part 1065 (and 40 CFR part 1066 for vehicle testing). This also applies for changes to test procedures specified in the standard-setting part to the extent that these changes do not correspond to new emission standards. This paragraph (c)(6) does not restrict the use of carryover certification data otherwise allowed by the standard-setting part.

(7) You may request to use alternate procedures that are equivalent to the specified procedures, or procedures that are more accurate or more precise than the specified procedures. We may perform tests with your engines using either the approved alternate procedures or the specified procedures. The following provisions apply to requests for alternate procedures:

(i) *Applications*. Follow the instructions in § 1065.12.

(ii) *Submission*. Submit requests in writing to the Designated Compliance Officer.

(iii) *Notification*. We may approve your request by telling you directly, or we may issue guidance announcing our approval of a specific alternate procedure, which would make additional requests for approval unnecessary.

(d) *Advance approval*. If we require you to request approval to use other procedures under paragraph (c) of this section, you may not use them until we approve your request.

[70 FR 40516, July 13, 2005, as amended at 73 FR 37290, June 30, 2008; 75 FR 23028, Apr. 30, 2010; 79 FR 23752, Apr. 28, 2014; 80 FR 9118, Feb. 19, 2015; 81 FR 74162, Oct. 25, 2016]

§ 1065.12 Approval of alternate procedures.

(a) To get approval for an alternate procedure under § 1065.10(c), send the Designated Compliance Officer an initial written request describing the alternate procedure and why you believe it is equivalent to the specified procedure. Anyone may request alternate procedure approval. This means that an individual engine manufacturer may request to use an alternate procedure. This also means that an instrument manufacturer may request to have an instrument, equipment, or procedure approved as an alternate procedure to those specified in this part. We may approve your request based on this information alone, whether or not it includes all the information specified in this section. Where we determine that your original submission does not include enough information for us to determine that the alternate procedure is equivalent to the specified procedure, we may ask you to submit supplemental information showing that your alternate procedure is consistently and reliably at least as accurate and repeatable as the specified procedure.

(b) We may make our approval under this section conditional upon meeting other requirements or specifications. We may limit our approval, for example, to certain time frames, specific duty cycles, or specific emission standards. Based upon any supplemental information we receive after our initial approval, we may amend a previously approved alternate procedure to extend, limit, or discontinue its use. We intend to publicly announce alternate procedures that we approve.

(c) Although we will make every effort to approve only alternate procedures that completely meet our requirements, we may revoke our approval of an alternate procedure if new information shows that it is significantly not equivalent to the specified procedure.

If we do this, we will grant time to switch to testing using an allowed procedure, considering the following factors:

(1) The cost, difficulty, and availability to switch to a procedure that we allow.

(2) The degree to which the alternate procedure affects your ability to show that your engines comply with all applicable emission standards.

(3) Any relevant factors considered in our initial approval.

(d) If we do not approve your proposed alternate procedure based on the information in your initial request, we may ask you to send additional information to fully evaluate your request. While we consider the information specified in this paragraph (d) and the statistical criteria of paragraph (e) of this section to be sufficient to demonstrate equivalence, it may not be necessary to include all the information or meet the specified statistical criteria. For example, systems that do not meet the statistical criteria in paragraph (e) of this section because they have a small bias toward high emission results could be approved since they would not adversely affect your ability to demonstrate compliance with applicable standards.

(1) *Theoretical basis*. Give a brief technical description explaining why you believe the proposed alternate procedure should result in emission measurements equivalent to those using the specified procedure. You may include equations, figures, and references. You should consider the full range of parameters that may affect equivalence. For example, for a request to use a different NO_X measurement procedure, you should theoretically relate the alternate detection principle to the specified detection principle over the expected concentration ranges for NO, NO_2, and interference gases. For a request to use a different PM measurement procedure, you should explain the principles by which the alternate procedure quantifies particulate mass similarly to the specified procedures.

(2) *Technical description*. Describe briefly any hardware or software needed to perform the alternate procedure. You may include dimensioned drawings, flowcharts, schematics, and component specifications. Explain any necessary calculations or other data manipulation.

(3) *Procedure execution*. Describe briefly how to perform the alternate procedure and recommend a level of training an operator should have to achieve acceptable results.

Summarize the installation, calibration, operation, and maintenance procedures in a step-by-step format. Describe how any calibration is performed using NIST-traceable standards or other similar standards we approve. Calibration must be specified by using known quantities and must not be specified as a comparison with other allowed procedures.

(4) *Data-collection techniques*. Compare measured emission results using the proposed alternate procedure and the specified procedure, as follows:

(i) Both procedures must be calibrated independently to NIST-traceable standards or to other similar standards we approve.

(ii) Include measured emission results from all applicable duty cycles. Measured emission results should show that the test engine meets all applicable emission standards according to specified procedures.

(iii) Use statistical methods to evaluate the emission measurements, such as those described in paragraph (e) of this section.

(e) Absent any other directions from us, use a *t*-test and an *F*-test calculated according to §1065.602 to evaluate whether your proposed alternate procedure is equivalent to the specified procedure. We may give you specific directions regarding methods for statistical analysis, or we may approve other methods that you propose. Such alternate methods may be more or less stringent than those specified in this paragraph (e). In determining the appropriate statistical criteria, we will consider the repeatability of measurements made with the reference procedure. For example, less stringent statistical criteria may be appropriate for measuring emission levels being so low that they adversely affect the repeatability of reference measurements. We recommend that you consult a statistician if you are unfamiliar with these statistical tests. Perform the tests as follows:

(1) Repeat measurements for all applicable duty cycles at least seven times for each procedure. You may use laboratory duty cycles to evaluate field-testing procedures.

Be sure to include all available results to evaluate the precision and accuracy of the proposed alternate procedure, as described in § 1065.2.

(2) Demonstrate the accuracy of the proposed alternate procedure by showing that it passes a two-sided *t*-test. Use an unpaired *t*-test, unless you show that a paired t-test is appropriate under both of the following provisions:

(i) For paired data, the population of the paired differences from which you sampled paired differences must be independent. That is, the probability of any given value of one paired difference is unchanged by knowledge of the value of another paired difference. For example, your paired data would violate this requirement if your series of paired differences showed a distinct increase or decrease that was dependent on the time at which they were sampled.

(ii) For paired data, the population of paired differences from which you sampled the paired differences must have a normal (i.e., Gaussian) distribution. If the population of paired difference is not normally distributed, consult a statistician for a more appropriate statistical test, which may include transforming the data with a mathematical function or using some kind of nonparametric test.

(3) Show that t is less than the critical t value, t_{crit}, tabulated in § 1065.602, for the following confidence intervals:

(i) 90% for a proposed alternate procedure for laboratory testing.

(ii) 95% for a proposed alternate procedure for field testing.

(4) Demonstrate the precision of the proposed alternate procedure by showing that it passes an *F*-test. Use a set of at least seven samples from the reference procedure and a set of at least seven samples from the alternate procedure to perform an *F*-test. The sets must meet the following requirements:

(i) Within each set, the values must be independent. That is, the probability of any given value in a set must be unchanged by knowledge of another value in that set. For example, your data would violate this requirement if a set showed a distinct increase or decrease that was dependent upon the time at which they were sampled.

(ii) For each set, the population of values from which you sampled must have a normal (i.e., Gaussian) distribution. If the population of values is not normally distributed, consult a statistician for a more appropriate statistical test, which may include transforming the data with a mathematical function or using some kind of nonparametric test.

(iii) The two sets must be independent of each other. That is, the probability of any given value in one set must be unchanged by knowledge of another value in the other set. For example, your data would violate this requirement if one value in a set showed a distinct increase or decrease that was dependent upon a value in the other set. Note that a trend of emission changes from an engine would not violate this requirement.

(iv) If you collect paired data for the paired *t*-test in paragraph (e)(2) in this section, use caution when selecting sets from paired data for the *F*-test. If you do this, select sets that do not mask the precision of the measurement procedure. We recommend selecting such sets only from data collected using the same engine, measurement instruments, and test cycle.

(5) Show that F is less than the critical F value, F_{crit}, tabulated in § 1065.602. If you have several *F*-test results from several sets of data, show that the mean *F*-test value is less than the mean critical F value for all the sets. Evaluate F_{crit}, based on the following confidence intervals:

(i) 90% for a proposed alternate procedure for laboratory testing.

(ii) 95% for a proposed alternate procedure for field testing.

[70 FR 40516, July 13, 2005, as amended at 73 FR 37290, June 30, 2008; 79 FR 23752, Apr. 28, 2014]

§ 1065.15 Overview of procedures for laboratory and field testing.

This section outlines the procedures to test engines that are subject to emission standards.

(a) In the standard-setting part, we set brake-specific emission standards in g/(kW · hr) (or g/(hp · hr)), for the following constituents:

(1) Total oxides of nitrogen, NO_X.

(2) Hydrocarbon, HC, which may be expressed in the following ways:

(i) Total hydrocarbon, THC.

(ii) Nonmethane hydrocarbon, NMHC, which results from subtracting methane, CH_4, from THC.

(iii) Nonmethane-nonethane hydrocarbon, NMNEHC, which results from subtracting methane, CH_4, and ethane, C_2H_6, from THC.

(iv) Total hydrocarbon-equivalent, THCE, which results from adjusting THC mathematically to be equivalent on a carbon-mass basis.

(v) Nonmethane hydrocarbon-equivalent, NMHCE, which results from adjusting NMHC mathematically to be equivalent on a carbon-mass basis.

(3) Particulate matter, PM.

(4) Carbon monoxide, CO.

(5) Carbon dioxide, CO_2.

(6) Methane, CH_4.

(7) Nitrous oxide, N_2O.

(b) Note that some engines are not subject to standards for all the emission constituents identified in paragraph (a) of this section. Note also that the standard-setting part may include standards for pollutants not listed in paragraph (a) of this section.

(c) We generally set brake-specific emission standards over test intervals and/or duty cycles, as follows:

(1) *Engine operation*. Testing may involve measuring emissions and work in a laboratory-type environment or in the field, as described in paragraph (f) of this section. For most laboratory testing, the engine is operated over one or more duty cycles specified in the standard-setting part. However, laboratory testing may also include non-duty cycle testing (such as simulation of field testing in a laboratory). For field testing, the engine is operated under normal in-use operation. The standard-setting part specifies how test intervals are defined for field testing. Refer to the definitions of ''duty cycle'' and ''test interval'' in § 1065.1001. Note that a single duty cycle may have multiple test intervals and require weighting of results from multiple test intervals to calculate a composite brake-specific emissions value to compare to the standard.

(2) *Constituent determination*. Determine the total mass of each constituent over a test interval by selecting from the following methods:

(i) *Continuous sampling*. In continuous sampling, measure the constituent's concentration continuously from raw or dilute exhaust. Multiply this concentration by the continuous (raw or dilute) flow rate at the emission sampling location to determine the constituent's flow rate. Sum the constituent's flow rate continuously over the test interval. This sum is the total mass of the emitted constituent.

(ii) *Batch sampling*. In batch sampling, continuously extract and store a sample of raw or dilute exhaust for later measurement. Extract a sample proportional to the raw or dilute exhaust flow rate. You may extract and store a proportional sample of exhaust in an appropriate container, such as a bag, and then measure NO_X, HC, CO, CO_2, CH_4, N_2O, and CH_2O concentrations in the container after the test interval. You may deposit PM from proportionally extracted exhaust onto an appropriate substrate, such as a filter. In this case, divide the PM by the amount of filtered exhaust to calculate the PM concentration. Multiply batch sampled concentrations by the total (raw or dilute) flow from which it was extracted during the test interval. This product is the total mass of the emitted constituent.

(iii) *Combined sampling*. You may use continuous and batch sampling simultaneously during a test interval, as follows:

(A) You may use continuous sampling for some constituents and batch sampling for others.

(B) You may use continuous and batch sampling for a single constituent, with one being a redundant measurement. *See* § 1065.201 for more information on redundant measurements.

(3) *Work determination*. Determine work over a test interval by one of the following methods:

(i) *Speed and torque*. Synchronously multiply speed and brake torque to calculate instantaneous values for engine brake power. Sum engine brake power over a test interval to determine total work.

(ii) *Fuel consumed and brake-specific fuel consumption*. Directly measure fuel consumed or calculate it with chemical

balances of the fuel, intake air, and exhaust. To calculate fuel consumed by a chemical balance, you must also measure either intake-air flow rate or exhaust flow rate. Divide the fuel consumed during a test interval by the brake-specific fuel consumption to determine work over the test interval. For laboratory testing, calculate the brake-specific fuel consumption using fuel consumed and speed and torque over a test interval. For field testing, refer to the standard-setting part and § 1065.915 for selecting an appropriate value for brake-specific fuel consumption.

(d) Refer to § 1065.650 for calculations to determine brake-specific emissions.

(e) The following figure illustrates the allowed measurement configurations described in this part 1065:

Figure 1 of §1065.15—Default test procedures and other specified procedures.

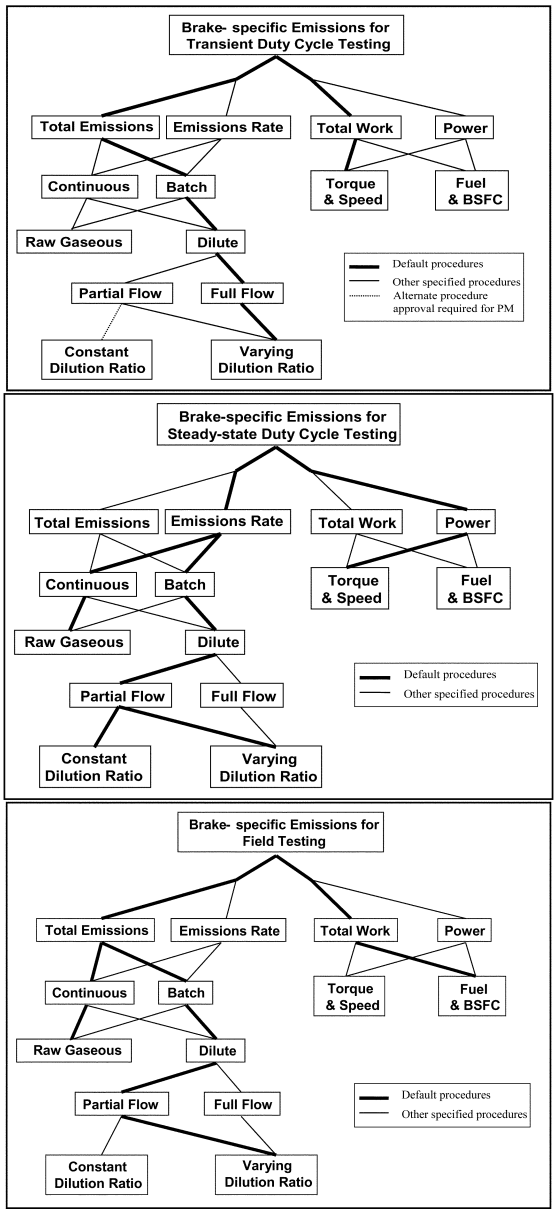

(f) This part 1065 describes how to test engines in a laboratory-type environment or in the field.

(1) This affects test intervals and duty cycles as follows:

(i) For laboratory testing, you generally determine brake-specific emissions for duty-cycle testing by using an engine dynamometer in a laboratory or other environment. This typically consists of one or more test intervals, each defined by a duty cycle, which is a sequence of modes, speeds, and/or torques (or powers) that an engine must follow. If the standard-setting part allows it, you may also simulate field testing with an engine dynamometer in a laboratory or other environment.

(ii) Field testing consists of normal in-use engine operation while an engine is installed in a vehicle, equipment, or vessel rather than following a specific engine duty cycle. The standard-setting part specifies how test intervals are defined for field testing.

(2) The type of testing may also affect what test equipment may be used. You may use ''lab-grade'' test equipment for any testing. The term ''lab-grade'' refers to equipment that fully conforms to the applicable specifications of this part. For some testing you may alternatively use ''field-grade'' equipment. The term ''field-grade'' refers to equipment that fully conforms to the applicable specifications of subpart J of this part, but does not fully conform to other specifications of this part. You may use ''field-grade'' equipment for field testing. We also specify in this part and in the standard-setting parts certain cases in which you may use ''field-grade'' equipment for testing in a laboratory-type environment. (NOTE: Although ''field-grade'' equipment is generally more portable than ''lab-grade'' test equipment, portability is not relevant to whether equipment is considered to be ''field-grade'' or ''lab-grade''.)

[70 FR 40516, July 13, 2005, as amended at 73 FR 37290, June 30, 2008; 75 FR 23028, Apr. 30, 2010; 76 FR 57437, Sept. 15, 2011; 79 FR 23753, Apr. 28, 2014; 81 FR 74162, Oct. 25, 2016]

§ 1065.20 Units of measure and overview of calculations.

(a) *System of units.* The procedures in this part generally follow the International System of Units (SI), as detailed in NIST Special Publication 811, which we incorporate by reference in § 1065.1010. The following exceptions apply:

(1) We designate angular speed, f_n, of an engine's crankshaft in revolutions per minute (r/min), rather than the SI unit of radians per second (rad/s). This is based on the commonplace use of r/min in many engine dynamometer laboratories.

(2) We designate brake-specific emissions in grams per kilowatt-hour (g/(kW · hr)), rather than the SI unit of grams per megajoule (g/MJ). In addition, we use the symbol hr to identify hour, rather than the SI convention of using h. This is based on the fact that engines are generally subject to emission standards expressed in g/kW · hr. If we specify engine standards in grams per horsepower · hour (g/(hp · hr)) in the standard-setting part, convert units as specified in paragraph (d) of this section.

(3) We generally designate temperatures in units of degrees Celsius (°C) unless a calculation requires an absolute temperature. In that case, we designate temperatures in units of Kelvin (K). For conversion purposes throughout this part, 0 °C equals 273.15 K. Unless specified otherwise, always use absolute temperature values for multiplying or dividing by temperature.

(b) *Concentrations.* This part does not rely on amounts expressed in parts per million. Rather, we express such amounts in the following SI units:

(1) For ideal gases, μmol/mol, formerly ppm (volume).

(2) For all substances, cm^3/m^3, formerly ppm (volume).

(3) For all substances, mg/kg, formerly ppm (mass).

(c) *Absolute pressure.* Measure absolute pressure directly or calculate it as the sum of atmospheric pressure plus a differential pressure that is referenced to atmospheric pressure. Always use absolute pressure values for multiplying or dividing by pressure.

(d) *Units conversion.* Use the following conventions to convert units:

(1) *Testing.* You may record values and perform calculations with other units. For testing with equipment that involves other units, use the conversion factors from NIST Special Publication 811, as described in paragraph (a) of this section.

(2) *Humidity*. In this part, we identify humidity levels by specifying dew-point, which is the temperature at which pure water begins to condense out of air. Use humidity conversions as described in § 1065.645.

(3) *Emission standards*. If your standard is in g/(hp · hr) units, convert kW to hp before any rounding by using the conversion factor of 1 hp (550 ft · lbf/s) = 0.7456999 kW. Round the final value for comparison to the applicable standard.

(e) *Rounding*. You are required to round certain final values, such as final emission values. You may round intermediate values when transferring data as long as you maintain at least six significant digits (which requires more than six decimal places for values less than 0.1), or all significant digits if fewer than six digits are available. Unless the standard-setting part specifies otherwise, do not round other intermediate values. Round values to the number of significant digits necessary to match the number of decimal places of the applicable standard or specification as described in this paragraph (e). Note that specifications expressed as percentages have infinite precision (as described in paragraph (e)(7) of this section). Use the following rounding convention, which is consistent with ASTM E29 and NIST SP 811:

(1) If the first (left-most) digit to be removed is less than five, remove all the appropriate digits without changing the digits that remain. For example, 3.141593 rounded to the second decimal place is 3.14.

(2) If the first digit to be removed is greater than five, remove all the appropriate digits and increase the lowest-value remaining digit by one. For example, 3.141593 rounded to the fourth decimal place is 3.1416.

(3) If the first digit to be removed is five with at least one additional non-zero digit following the five, remove all the appropriate digits and increase the lowest-value remaining digit by one. For example, 3.141593 rounded to the third decimal place is 3.142.

(4) If the first digit to be removed is five with no additional non-zero digits following the five, remove all the appropriate digits, increase the lowest-value remaining digit by one if it is odd and leave it unchanged if it is even. For example, 1.75 and 1.750 rounded to the first decimal place are 1.8; while 1.85 and 1.850 rounded to the first decimal place are also 1.8. Note that this rounding procedure will always result in an even number for the lowest-value digit.

(5) This paragraph (e)(5) applies if the regulation specifies rounding to an increment other than decimal places or powers of ten (to the nearest 0.01, 0.1, 1, 10, 100, *etc.*). To round numbers for these special cases, divide the quantity by the specified rounding increment. Round the result to the nearest whole number as described in paragraphs (e)(1) through (4) of this section. Multiply the rounded number by the specified rounding increment. This value is the desired result. For example, to round 0.90 to the nearest 0.2, divide 0.90 by 0.2 to get a result of 4.5, which rounds to 4. Multiplying 4 by 0.2 gives 0.8, which is the result of rounding 0.90 to the nearest 0.2.

(6) The following tables further illustrate the rounding procedures specified in this paragraph (e):

Quantity	Rounding increment			
	10	1	0.1	0.01
3.141593	0	3	3.1	3.14
123,456.789	123,460	123,457	123,456.8	123,456.79
5.500	10	6	5.5	5.50
4.500	0	4	4.5	4.50

Quantity	Rounding increment			
	25	3	0.5	0.02
229.267	225	228	229.5	229.26
62.500	50	63	62.5	62.50
87.500	100	87	87.5	87.50
7.500	0	6	7.5	7.50

(7) This paragraph (e)(7) applies where we specify a limit or tolerance as some percentage of another value (such as ±2% of a maximum concentration). You may show compliance with such specifications either by applying the percentage to the total value to calculate an absolute limit, or by converting the absolute value to a percentage by dividing it by the total value.

(i) Do not round either value (the absolute limit or the calculated percentage), except as specified in paragraph (e)(7)(ii) of this section. For example, assume we specify that an analyzer must have a repeatability of ±1% of the maximum concentration or better, the maximum concentration is 1059 ppm, and you determine repeatability to be ±6.3 ppm. In this example, you could calculate an absolute limit of ±10.59 ppm (1059 ppm × 0.01) or calculate that the 6.3 ppm repeatability is equivalent to a repeatability of 0.5949008498584%.

(ii) Prior to July 1, 2013, you may treat tolerances (and equivalent specifications) specified in percentages as having fixed rather than infinite precision. For example, 2% would be equivalent to 1.51% to 2.50% and 2.0% would be equivalent to 1.951% to 2.050%. Note that this allowance applies whether or not the percentage is explicitly specified as a percentage of another value.

(8) You may use measurement devices that incorporate internal rounding, consistent with the provisions of this paragraph (e)(8). You may use devices that use any rounding convention if they report six or more significant digits. You may use devices that report fewer than six digits, consistent with good engineering judgment and the accuracy, repeatability, and noise specifications of this part. Note that this provision does not necessarily require you to perform engineering analysis or keep records.

(f) Interpretation of ranges. Interpret a range as a tolerance unless we explicitly identify it as an accuracy, repeatability, linearity, or noise specification. See § 1065.1001 for the definition of tolerance. In this part, we specify two types of ranges:

(1) Whenever we specify a range by a single value and corresponding limit values above and below that value (such as X ±Y), target the associated control point to that single value (X). Examples of this type of range include ''±10% of maximum pressure'', or ''(30 ±10) kPa''. In these examples, you would target the maximum pressure or 30 kPa, respectively.

(2) Whenever we specify a range by the interval between two values, you may target any associated control point to any value within that range. An example of this type of range is ''(40 to 50) kPa''.

(g) *Scaling of specifications with respect to an applicable standard.* Because this part 1065 is applicable to a wide range of engines and emission standards, some of the specifications in this part are scaled with respect to an engine's applicable standard or maximum power. This ensures that the specification will be adequate to determine compliance, but not overly burdensome by requiring unnecessarily high-precision equipment. Many of these specifications are given with respect to a ''flow-weighted mean'' that is expected at the standard or during testing. Flow-weighted mean is the mean of a quantity after it is weighted proportional to a corresponding flow rate. For example, if a gas concentration is measured continuously from the raw exhaust of an engine, its flow-weighted mean concentration is the sum of the products (dry-to-wet corrected, if applicable) of each recorded concentration times its respective exhaust flow rate, divided by the sum of the recorded flow rates. As another example, the bag concentration from a CVS system is the same as the flow-weighted mean concentration, because the CVS system itself flow-weights the bag concentration. Refer to § 1065.602 for information needed to estimate and calculate flow-weighted means. Wherever a specification is scaled to a value based upon an applicable standard, interpret the standard to be the family emission limit if the engine is certified under an emission credit program in the standard-setting part.

[70 FR 40516, July 13, 2005, as amended at 73 FR 37292, June 30, 2008; 76 FR 57438, Sept. 15, 2011; 79 FR 23753, Apr. 28, 2014]

§ 1065.25 Recordkeeping.

(a) The procedures in this part include various requirements to record

data or other information. Refer to the standard-setting part and § 1065.695 regarding specific recordkeeping requirements.

(b) You must promptly send us organized, written records in English if we ask for them. We may review them at any time.

(c) We may waive specific reporting or recordkeeping requirements we determine to be unnecessary for the purposes of this part and the standard-setting part. Note that while we will generally keep the records required by this part, we are not obligated to keep records we determine to be unnecessary for us to keep. For example, while we require you to keep records for invalid tests so that we may verify that your invalidation was appropriate, it is not necessary for us to keep records for our own invalid tests.

[79 FR 23753, Apr. 28, 2014]

Subpart B—Equipment Specifications

§ 1065.101 Overview.

(a) This subpart specifies equipment, other than measurement instruments, related to emission testing. The provisions of this subpart apply for all engine dynamometer testing where engine speeds and loads are controlled to follow a prescribed duty cycle. See subpart J of this part to determine which of the provisions of this subpart apply for field testing. This equipment includes three broad categories-dynamometers, engine fluid systems (such as fuel and intake-air systems), and emission-sampling hardware.

(b) Other related subparts in this part identify measurement instruments (subpart C), describe how to evaluate the performance of these instruments (subpart D), and specify engine fluids and analytical gases (subpart H).

(c) Subpart J of this part describes additional equipment that is specific to field testing.

(d) Figures 1 and 2 of this section illustrate some of the possible configurations of laboratory equipment. These figures are schematics only; we do not require exact conformance to them. Figure 1 of this section illustrates the equipment specified in this subpart and gives some references to sections in this subpart. Figure 2 of this section illustrates some of the possible configurations of a full-flow dilution, constant-volume sampling (CVS) system. Not all possible CVS configurations are shown.

(e) Dynamometer testing involves engine operation over speeds and loads that are controlled to a prescribed duty cycle. Field testing involves measuring emissions over normal in-use operation of a vehicle or piece of equipment. Field testing does not involve operating an engine over a prescribed duty cycle.

Figure 1 of §1065.101—Engine dynamometer laboratory equipment.

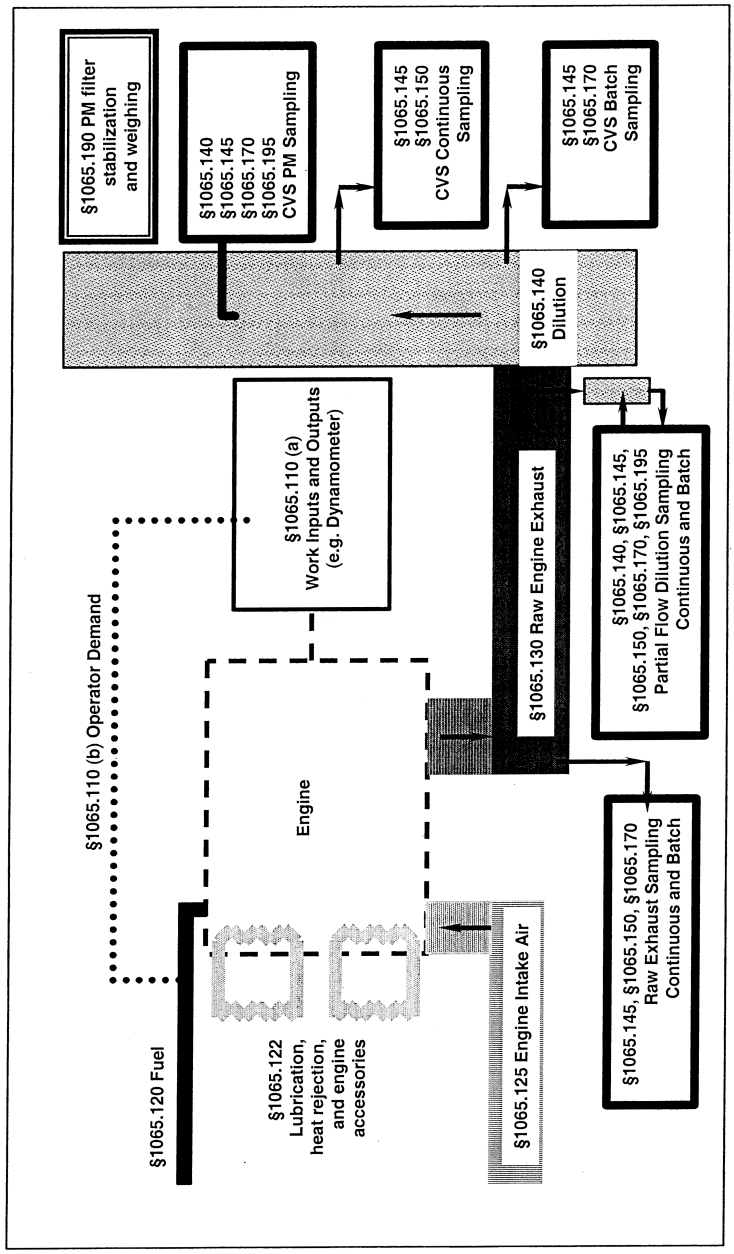

Figure 2 of §1065.101—Examples of some full-flow dilution sampling configurations.

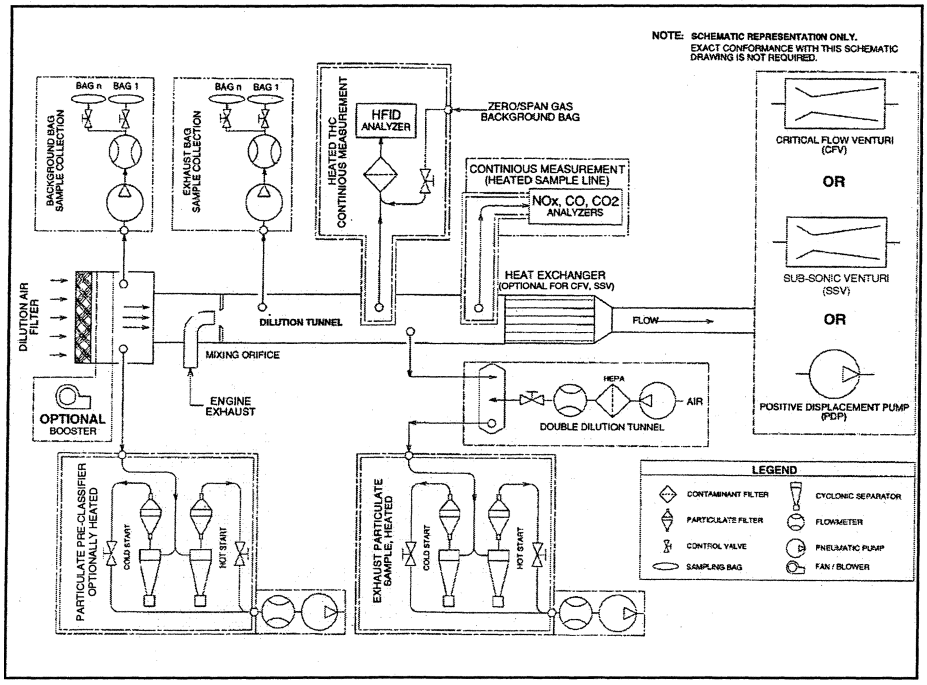

[70 FR 40516, July 13, 2005, as amended at 73 FR 37292, June 30, 2008]

§ 1065.110 Work inputs and outputs, accessory work, and operator demand.

(a) *Work*. Use good engineering judgment to simulate all engine work inputs and outputs as they typically would operate in use. Account for work inputs and outputs during an emission test by measuring them; or, if they are small, you may show by engineering analysis that disregarding them does not affect your ability to determine the net work output by more than ±0.5% of the net expected work output over the test interval. Use equipment to simulate the specific types of work, as follows:

(1) *Shaft work*. Use an engine dynamometer that is able to meet the cycle-validation criteria in § 1065.514 over each applicable duty cycle.

(i) You may use eddy-current and water-brake dynamometers for any testing that does not involve engine motoring, which is identified by negative torque commands in a reference duty cycle. See the standard setting part for reference duty cycles that are applicable to your engine.

(ii) You may use alternating-current or direct-current motoring dynamometers for any type of testing.

(iii) You may use one or more dynamometers.

(iv) You may use any device that is already installed on a vehicle, equipment, or vessel to absorb work from the engine's output shaft(s). Examples of these types of devices include a vessel's propeller and a locomotive's generator.

(2) *Electrical work*. Use one or more of the following to simulate electrical work:

(i) Use storage batteries or capacitors that are of the type and capacity installed in use.

(ii) Use motors, generators, and alternators that are of the type and capacity installed in use.

(iii) Use a resistor load bank to simulate electrical loads.

(3) *Pump, compressor, and turbine work.* Use pumps, compressors, and turbines that are of the type and capacity installed in use. Use working fluids that are of the same type and thermodynamic state as normal in-use operation.

(b) *Laboratory work inputs.* You may supply any laboratory inputs of work to the engine. For example, you may supply electrical work to the engine to operate a fuel system, and as another example you may supply compressor work to the engine to actuate pneumatic valves. We may ask you to show by engineering analysis your accounting of laboratory work inputs to meet the criterion in paragraph (a) of this section.

(c) *Engine accessories.* You must either install or account for the work of engine accessories required to fuel, lubricate, or heat the engine, circulate coolant to the engine, or to operate aftertreatment devices. Operate the engine with these accessories installed or accounted for during all testing operations, including mapping. If these accessories are not powered by the engine during a test, account for the work required to perform these functions from the total work used in brake-specific emission calculations. For air-cooled engines only, subtract externally powered fan work from total work. We may ask you to show by engineering analysis your accounting of engine accessories to meet the criterion in paragraph (a) of this section.

(d) *Engine starter.* You may install a production-type starter.

(e) *Operator demand for shaft work.* Operator demand is defined in §1065.1001. Command the operator demand and the dynamometer(s) to follow a prescribed duty cycle with set points for engine speed and torque as specified in §1065.512. Refer to the standard-setting part to determine the specifications for your duty cycle(s). Use a mechanical or electronic input to control operator demand such that the engine is able to meet the validation criteria in §1065.514 over each applicable duty cycle. Record feedback values for engine speed and torque as specified in §1065.512. Using good engineering judgment, you may improve control of operator demand by altering on-engine speed and torque controls. However, if these changes result in unrepresentative testing, you must notify us and recommend other test procedures under §1065.10(c)(1).

(f) *Other engine inputs.* If your electronic control module requires specific input signals that are not available during dynamometer testing, such as vehicle speed or transmission signals, you may simulate the signals using good engineering judgment. Keep records that describe what signals you simulate and explain why these signals are necessary for representative testing.

[70 FR 40516, July 13, 2005, as amended at 73 FR 37292, June 30, 2008]

§1065.120 Fuel properties and fuel temperature and pressure.

(a) Use fuels as specified in the standard-setting part, or as specified in subpart H of this part if fuels are not specified in the standard-setting part.

(b) If the engine manufacturer specifies fuel temperature and pressure tolerances and the location where they are to be measured, then measure the fuel temperature and pressure at the specified location to show that you are within these tolerances throughout testing.

(c) If the engine manufacturer does not specify fuel temperature and pressure tolerances, use good engineering judgment to set and control fuel temperature and pressure in a way that represents typical in-use fuel temperatures and pressures.

[70 FR 40516, July 13, 2005, as amended at 73 FR 37293, June 30, 2008]

§1065.122 Engine cooling and lubrication.

(a) *Engine cooling.* Cool the engine during testing so its intake-air, oil, coolant, block, and head temperatures are within their expected ranges for normal operation. You may use auxiliary coolers and fans.

(1) For air-cooled engines only, if you use auxiliary fans you must account for work input to the fan(s) according to § 1065.110.

(2) See § 1065.125 for more information related to intake-air cooling.

(3) See § 1065.127 for more information related to exhaust gas recirculation cooling.

(4) Measure temperatures at the manufacturer-specified locations. If the manufacturer does not specify temperature measurement locations, then use good engineering judgment to monitor intake-air, oil, coolant, block, and head temperatures to ensure that they are in their expected ranges for normal operation.

(b) *Forced cooldown*. You may install a forced cooldown system for an engine and an exhaust aftertreatment device according to § 1065.530(a)(1).

(c) *Lubricating oil*. Use lubricating oils specified in § 1065.740. For two-stroke engines that involve a specified mixture of fuel and lubricating oil, mix the lubricating oil with the fuel according to the manufacturer's specifications.

(d) *Coolant*. For liquid-cooled engines, use coolant as specified in § 1065.745.

[70 FR 40516, July 13, 2005, as amended at 73 FR 37293, June 30, 2008]

§ 1065.125 Engine intake air.

(a) Use the intake-air system installed on the engine or one that represents a typical in-use configuration. This includes the charge-air cooling and exhaust gas recirculation systems.

(b) Measure temperature, humidity, and atmospheric pressure near the entrance of the furthest upstream engine or in-use intake system component. This would generally be near the engine's air filter, or near the inlet to the in-use air intake system for engines that have no air filter. For engines with multiple intakes, make measurements near the entrance of each intake.

(1) *Pressure*. You may use a single shared atmospheric pressure meter as long as your laboratory equipment for handling intake air maintains ambient pressure at all intakes within ±1 kPa of the shared atmospheric pressure. For engines with multiple intakes with separate atmospheric pressure measurements at each intake, use an average value for verifying compliance to § 1065.520(b)(2).

(2) *Humidity*. You may use a single shared humidity measurement for intake air as long as your equipment for handling intake air maintains dewpoint at all intakes to within ±0.5 °C of the shared humidity measurement. For engines with multiple intakes with separate humidity measurements at each intake, use a flow-weighted average humidity for NO_X corrections. If individual flows of each intake are not measured, use good engineering judgment to estimate a flow-weighted average humidity.

(3) *Temperature*. Good engineering judgment may require that you shield the temperature sensors or move them upstream of an elbow in the laboratory intake system to prevent measurement errors due to radiant heating from hot engine surfaces or in-use intake system components. You must limit the distance between the temperature sensor and the entrance to the furthest upstream engine or in-use intake system component to no more than 12 times the outer hydraulic diameter of the entrance to the furthest upstream engine or in-use intake system component. However, you may exceed this limit if you use good engineering judgment to show that the temperature at the furthest upstream engine or in-use intake system component meets the specification in paragraph (c) of this section. For engines with multiple intakes, use a flow-weighted average value to verify compliance with the specification in paragraph (c) of this section. If individual flows of each intake are not measured, you may use good engineering judgment to estimate a flow-weighted average temperature. You may also verify that each individual intake complies with the specification in paragraph (c) of this section.

(c) Maintain the temperature of intake air to (25 ±5) °C, except as follows:

(1) Follow the standard-setting part if it specifies different temperatures.

(2) For engines above 560 kW, you may use 35 °C as the upper bound of the tolerance. However, your system must be capable of controlling the temperature to the 25 °C setpoint for any

steady-state operation at >30% of maximum engine power.

(3) You may ask us to allow you to apply a different setpoint for intake air temperature if it is necessary to remain consistent with the provisions of § 1065.10(c)(1) for testing during which ambient temperature will be outside this range.

(d) Use an intake-air restriction that represents production engines. Make sure the intake-air restriction is between the manufacturer's specified maximum for a clean filter and the manufacturer's specified maximum allowed. Measure the static differential pressure of the restriction at the location and at the speed and torque set points specified by the manufacturer. If the manufacturer does not specify a location, measure this pressure upstream of any turbocharger or exhaust gas recirculation system connection to the intake air system. If the manufacturer does not specify speed and torque points, measure this pressure while the engine outputs maximum power. As the manufacturer, you are liable for emission compliance for all values up to the maximum restriction you specify for a particular engine.

(e) This paragraph (e) includes provisions for simulating charge-air cooling in the laboratory. This approach is described in paragraph (e)(1) of this section. Limits on using this approach are described in paragraphs (e)(2) and (3) of this section.

(1) Use a charge-air cooling system with a total intake-air capacity that represents production engines' in-use installation. Design any laboratory charge-air cooling system to minimize accumulation of condensate. Drain any accumulated condensate. Before starting a duty cycle (or preconditioning for a duty cycle), completely close all drains that would normally be closed during in-use operation. Keep those drains closed during the emission test. Maintain coolant conditions as follows:

(i) Maintain a coolant temperature of at least 20 °C at the inlet to the charge-air cooler throughout testing. We recommend maintaining a coolant temperature of 25 ±5 °C at the inlet of the charge-air cooler.

(ii) At the engine conditions specified by the manufacturer, set the coolant flow rate to achieve an air temperature within ±5 °C of the value specified by the manufacturer after the charge-air cooler's outlet. Measure the air-outlet temperature at the location specified by the manufacturer. Use this coolant flow rate set point throughout testing. If the engine manufacturer does not specify engine conditions or the corresponding charge-air cooler air outlet temperature, set the coolant flow rate at maximum engine power to achieve a charge-air cooler air outlet temperature that represents in-use operation.

(iii) If the engine manufacturer specifies pressure-drop limits across the charge-air cooling system, ensure that the pressure drop across the charge-air cooling system at engine conditions specified by the manufacturer is within the manufacturer's specified limit(s). Measure the pressure drop at the manufacturer's specified locations.

(2) Using a constant flow rate as described in paragraph (e)(1) of this section may result in unrepresentative overcooling of the intake air. The provisions of this paragraph (e)(2) apply instead of the provisions of § 1065.10(c)(1) for this simulation. Our allowance to cool intake air as specified in this paragraph (e) does not affect your liability for field testing or for laboratory testing that is done in a way that better represents in-use operation. Where we determine that this allowance adversely affects your ability to demonstrate that your engines would comply with emission standards under in-use conditions, we may require you to use more sophisticated setpoints and controls of charge-air pressure drop, coolant temperature, and flow rate to achieve more representative results.

(3) This approach does not apply for field testing. You may not correct measured emission levels from field testing to account for any differences caused by the simulated cooling in the laboratory.

[70 FR 40516, July 13, 2005, as amended at 73 FR 37293, June 30, 2008; 73 FR 59321, Oct. 8, 2008; 75 FR 23029, Apr. 30, 2010; 76 FR 57440, Sept. 15, 2011]

§ 1065.127 Exhaust gas recirculation.

Use the exhaust gas recirculation (EGR) system installed with the engine

or one that represents a typical in-use configuration. This includes any applicable EGR cooling devices.

§ 1065.130 Engine exhaust.

(a) *General.* Use the exhaust system installed with the engine or one that represents a typical in-use configuration. This includes any applicable aftertreatment devices. We refer to exhaust piping as an exhaust stack; this is equivalent to a tailpipe for vehicle configurations.

(b) *Aftertreatment configuration.* If you do not use the exhaust system installed with the engine, configure any aftertreatment devices as follows:

(1) Position any aftertreatment device so its distance from the nearest exhaust manifold flange or turbocharger outlet is within the range specified by the engine manufacturer in the application for certification. If this distance is not specified, position aftertreatment devices to represent typical in-use vehicle configurations.

(2) You may use exhaust tubing that is not from the in-use exhaust system upstream of any aftertreatment device that is of diameter(s) typical of in-use configurations. If you use exhaust tubing that is not from the in-use exhaust system upstream of any aftertreatment device, position each aftertreatment device according to paragraph (b)(1) of this section.

(c) *Sampling system connections.* Connect an engine's exhaust system to any raw sampling location or dilution stage, as follows:

(1) Minimize laboratory exhaust tubing lengths and use a total length of laboratory tubing of no more than 10 m or 50 outside diameters, whichever is greater. The start of laboratory exhaust tubing should be specified as the exit of the exhaust manifold, turbocharger outlet, last aftertreatment device, or the in-use exhaust system, whichever is furthest downstream. The end of laboratory exhaust tubing should be specified as the sample point, or first point of dilution. If laboratory exhaust tubing consists of several different outside tubing diameters, count the number of diameters of length of each individual diameter, then sum all the diameters to determine the total length of exhaust tubing in diameters. Use the mean outside diameter of any converging or diverging sections of tubing. Use outside hydraulic diameters of any noncircular sections. For multiple stack configurations where all the exhaust stacks are combined, the start of the laboratory exhaust tubing may be taken at the last joint of where all the stacks are combined.

(2) You may install short sections of flexible laboratory exhaust tubing at any location in the engine or laboratory exhaust systems. You may use up to a combined total of 2 m or 10 outside diameters of flexible exhaust tubing.

(3) Insulate any laboratory exhaust tubing downstream of the first 25 outside diameters of length.

(4) Use laboratory exhaust tubing materials that are smooth-walled, electrically conductive, and not reactive with exhaust constituents. Stainless steel is an acceptable material.

(5) We recommend that you use laboratory exhaust tubing that has either a wall thickness of less than 2 mm or is air gap-insulated to minimize temperature differences between the wall and the exhaust.

(6) We recommend that you connect multiple exhaust stacks from a single engine into one stack upstream of any emission sampling. For raw or dilute partial-flow emission sampling, to ensure mixing of the multiple exhaust streams before emission sampling, we recommend a minimum Reynolds number, $Re^{\#}$, of 4000 for the combined exhaust stream, where $Re^{\#}$ is based on the inside diameter of the combined flow at the first sampling point. You may configure the exhaust system with turbulence generators, such as orifice plates or fins, to achieve good mixing; inclusion of turbulence generators may be required for $Re^{\#}$ less than 4000 to ensure good mixing. $Re^{\#}$ is defined in § 1065.640. For dilute full-flow (CVS) emission sampling, you may configure the exhaust system without regard to mixing in the laboratory section of the raw exhaust. For example you may size the laboratory section to reduce its pressure drop even if the $Re^{\#}$, in the laboratory section of the raw exhaust is less than 4000.

(d) *In-line instruments.* You may insert instruments into the laboratory exhaust tubing, such as an in-line

smoke meter. If you do this, you may leave a length of up to 5 outside diameters of laboratory exhaust tubing uninsulated on each side of each instrument, but you must leave a length of no more than 25 outside diameters of laboratory exhaust tubing uninsulated in total, including any lengths adjacent to in-line instruments.

(e) *Leaks*. Minimize leaks sufficiently to ensure your ability to demonstrate compliance with the applicable standards. We recommend performing a chemical balance of fuel, intake air, and exhaust according to § 1065.655 to verify exhaust system integrity.

(f) *Grounding*. Electrically ground the entire exhaust system.

(g) *Forced cooldown*. You may install a forced cooldown system for an exhaust aftertreatment device according to § 1065.530(a)(1)(i).

(h) *Exhaust restriction*. As the manufacturer, you are liable for emission compliance for all values up to the maximum restriction(s) you specify for a particular engine. Measure and set exhaust restriction(s) at the location(s) and at the engine speed and torque values specified by the manufacturer. Also, for variable-restriction aftertreatment devices, measure and set exhaust restriction(s) at the aftertreatment condition (degreening/aging and regeneration/loading level) specified by the manufacturer. If the manufacturer does not specify a location, measure this pressure downstream of any turbocharger. If the manufacturer does not specify speed and torque points, measure pressure while the engine produces maximum power. Use an exhaust-restriction setpoint that represents a typical in-use value, if available. If a typical in-use value for exhaust restriction is not available, set the exhaust restriction at (80 to 100)% of the maximum exhaust restriction specified by the manufacturer, or if the maximum is 5 kPa or less, the set point must be no less than 1.0 kPa from the maximum. For example, if the maximum back pressure is 4.5 kPa, do not use an exhaust restriction set point that is less than 3.5 kPa.

(i) *Open crankcase emissions*. If the standard-setting part requires measuring open crankcase emissions, you may either measure open crankcase emissions separately using a method that we approve in advance, or route open crankcase emissions directly into the exhaust system for emission measurement. If the engine is not already configured to route open crankcase emissions for emission measurement, route open crankcase emissions as follows:

(1) Use laboratory tubing materials that are smooth-walled, electrically conductive, and not reactive with crankcase emissions. Stainless steel is an acceptable material. Minimize tube lengths. We also recommend using heated or thin-walled or air gap-insulated tubing to minimize temperature differences between the wall and the crankcase emission constituents.

(2) Minimize the number of bends in the laboratory crankcase tubing and maximize the radius of any unavoidable bend.

(3) Use laboratory crankcase exhaust tubing that meets the engine manufacturer's specifications for crankcase back pressure.

(4) Connect the crankcase exhaust tubing into the raw exhaust downstream of any aftertreatment system, downstream of any installed exhaust restriction, and sufficiently upstream of any sample probes to ensure complete mixing with the engine's exhaust before sampling. Extend the crankcase exhaust tube into the free stream of exhaust to avoid boundary-layer effects and to promote mixing. You may orient the crankcase exhaust tube's outlet in any direction relative to the raw exhaust flow.

[73 FR 37293, June 30, 2008, as amended at 79 FR 23754, Apr. 28, 2014]

EFFECTIVE DATE NOTE: At 86 FR 34534, June 29, 2021, § 1065.130 was amended, effective July 29, 2021.

§ 1065.140 Dilution for gaseous and PM constituents.

(a) *General*. You may dilute exhaust with ambient air, purified air, or nitrogen. References in this part to ''dilution air'' may include any of these. For gaseous emission measurement, the dilution air must be at least 15 °C. Note that the composition of the dilution air affects some gaseous emission measurement instruments' response to

emissions. We recommend diluting exhaust at a location as close as possible to the location where ambient air dilution would occur in use. Dilution may occur in a single stage or in multiple stages. For dilution in multiple stages, the first stage is considered primary dilution and later stages are considered secondary dilution.

(b) *Dilution-air conditions and background concentrations.* Before dilution air is mixed with exhaust, you may precondition it by increasing or decreasing its temperature or humidity. You may also remove constituents to reduce their background concentrations. The following provisions apply to removing constituents or accounting for background concentrations:

(1) You may measure constituent concentrations in the dilution air and compensate for background effects on test results. See §1065.650 for calculations that compensate for background concentrations (40 CFR 1066.610 for vehicle testing).

(2) Measure these background concentrations the same way you measure diluted exhaust constituents, or measure them in a way that does not affect your ability to demonstrate compliance with the applicable standards. For example, you may use the following simplifications for background sampling:

(i) You may disregard any proportional sampling requirements.

(ii) You may use unheated gaseous sampling systems.

(iii) You may use unheated PM sampling systems.

(iv) You may use continuous sampling if you use batch sampling for diluted emissions.

(v) You may use batch sampling if you use continuous sampling for diluted emissions.

(3) For removing background PM, we recommend that you filter all dilution air, including primary full-flow dilution air, with high-efficiency particulate air (HEPA) filters that have an initial minimum collection efficiency specification of 99.97% (see §1065.1001 for procedures related to HEPA-filtration efficiencies). Ensure that HEPA filters are installed properly so that background PM does not leak past the HEPA filters. If you choose to correct for background PM without using HEPA filtration, demonstrate that the background PM in the dilution air contributes less than 50% to the net PM collected on the sample filter. You may correct net PM without restriction if you use HEPA filtration.

(c) *Full-flow dilution; constant-volume sampling (CVS).* You may dilute the full flow of raw exhaust in a dilution tunnel that maintains a nominally constant volume flow rate, molar flow rate or mass flow rate of diluted exhaust, as follows:

(1) *Construction.* Use a tunnel with inside surfaces of 300 series stainless steel. Electrically ground the entire dilution tunnel. We recommend a thin-walled and insulated dilution tunnel to minimize temperature differences between the wall and the exhaust gases. You may not use any flexible tubing in the dilution tunnel upstream of the PM sample probe. You may use nonconductive flexible tubing downstream of the PM sample probe and upstream of the CVS flow meter; use good engineering judgment to select a tubing material that is not prone to leaks, and configure the tubing to ensure smooth flow at the CVS flow meter.

(2) *Pressure control.* Maintain static pressure at the location where raw exhaust is introduced into the tunnel within ±1.2 kPa of atmospheric pressure. You may use a booster blower to control this pressure. If you test using more careful pressure control and you show by engineering analysis or by test data that you require this level of control to demonstrate compliance at the applicable standards, we will maintain the same level of static pressure control when we test.

(3) *Mixing.* Introduce raw exhaust into the tunnel by directing it downstream along the centerline of the tunnel. If you dilute directly from the exhaust stack, the end of the exhaust stack is considered to be the start of the dilution tunnel. You may introduce a fraction of dilution air radially from the tunnel's inner surface to minimize exhaust interaction with the tunnel walls. You may configure the system

with turbulence generators such as orifice plates or fins to achieve good mixing. We recommend a minimum Reynolds number, $Re^{\#}$, of 4000 for the diluted exhaust stream, where $Re^{\#}$ is based on the inside diameter of the dilution tunnel. $Re^{\#}$ is defined in § 1065.640.

(4) *Flow measurement preconditioning.* You may condition the diluted exhaust before measuring its flow rate, as long as this conditioning takes place downstream of any heated HC or PM sample probes, as follows:

(i) You may use flow straighteners, pulsation dampeners, or both of these.

(ii) You may use a filter.

(iii) You may use a heat exchanger to control the temperature upstream of any flow meter, but you must take steps to prevent aqueous condensation as described in paragraph (c)(6) of this section.

(5) *Flow measurement.* Section 1065.240 describes measurement instruments for diluted exhaust flow.

(6) *Aqueous condensation.* This paragraph (c)(6) describes how you must address aqueous condensation in the CVS. As described below, you may meet these requirements by preventing or limiting aqueous condensation in the CVS from the exhaust inlet to the last emission sample probe. See that paragraph for provisions related to the CVS between the last emission sample probe and the CVS flow meter. You may heat and/or insulate the dilution tunnel walls, as well as the bulk stream tubing downstream of the tunnel to prevent or limit aqueous condensation. Where we allow aqueous condensation to occur, use good engineering judgment to ensure that the condensation does not affect your ability to demonstrate that your engines comply with the applicable standards (see § 1065.10(a)).

(i) *Preventing aqueous condensation.* To prevent condensation, you must keep the temperature of internal surfaces, excluding any sample probes, above the dew point of the dilute exhaust passing through the CVS tunnel. Use good engineering judgment to monitor temperatures in the CVS. For the purposes of this paragraph (c)(6), assume that aqueous condensation is pure water condensate only, even though the definition of ''aqueous condensation'' in § 1065.1001 includes condensation of any constituents that contain water. No specific verification check is required under this paragraph (c)(6)(i), but we may ask you to show how you comply with this requirement. You may use engineering analysis, CVS tunnel design, alarm systems, measurements of wall temperatures, and calculation of water dew point to demonstrate compliance with this requirement. For optional CVS heat exchangers, you may use the lowest water temperature at the inlet(s) and outlet(s) to determine the minimum internal surface temperature.

(ii) *Limiting aqueous condensation.* This paragraph (c)(6)(ii) specifies limits of allowable condensation and requires you to verify that the amount of condensation that occurs during each test interval does not exceed the specified limits.

(A) Use chemical balance equations in § 1065.655 to calculate the mole fraction of water in the dilute exhaust continuously during testing. Alternatively, you may continuously measure the mole fraction of water in the dilute exhaust prior to any condensation during testing. Use good engineering judgment to select, calibrate and verify water analyzers/detectors. The linearity verification requirements of § 1065.307 do not apply to water analyzers/detectors used to correct for the water content in exhaust samples.

(B) Use good engineering judgment to select and monitor locations on the CVS tunnel walls prior to the last emission sample probe. If you are also verifying limited condensation from the last emission sample probe to the CVS flow meter, use good engineering judgment to select and monitor locations on the CVS tunnel walls, optional CVS heat exchanger, and CVS flow meter. For optional CVS heat exchangers, you may use the lowest water temperature at the inlet(s) and outlet(s) to determine the minimum internal surface temperature. Identify the minimum surface temperature on a continuous basis.

(C) Identify the maximum potential mole fraction of dilute exhaust lost on a continuous basis during the entire test interval. This value must be less

than or equal to 0.02. Calculate on a continuous basis the mole fraction of water that would be in equilibrium with liquid water at the measured minimum surface temperature. Subtract this mole fraction from the mole fraction of water that would be in the exhaust without condensation (either measured or from the chemical balance), and set any negative values to zero. This difference is the potential mole fraction of the dilute exhaust that would be lost due to water condensation on a continuous basis.

(D) Integrate the product of the molar flow rate of the dilute exhaust and the potential mole fraction of dilute exhaust lost, and divide by the totalized dilute exhaust molar flow over the test interval. This is the potential mole fraction of the dilute exhaust that would be lost due to water condensation over the entire test interval. Note that this assumes no re-evaporation. This value must be less than or equal to 0.005.

(7) *Flow compensation*. Maintain nominally constant molar, volumetric or mass flow of diluted exhaust. You may maintain nominally constant flow by either maintaining the temperature and pressure at the flow meter or by directly controlling the flow of diluted exhaust. You may also directly control the flow of proportional samplers to maintain proportional sampling. For an individual test, verify proportional sampling as described in § 1065.545.

(d) *Partial-flow dilution (PFD)*. You may dilute a partial flow of raw or previously diluted exhaust before measuring emissions. Section 1065.240 describes PFD-related flow measurement instruments. PFD may consist of constant or varying dilution ratios as described in paragraphs (d)(2) and (3) of this section. An example of a constant dilution ratio PFD is a ''secondary dilution PM'' measurement system.

(1) *Applicability*. (i) You may use PFD to extract a proportional raw exhaust sample for any batch or continuous PM emission sampling over any transient duty cycle, any steady-state duty cycle, or any ramped-modal cycle.

(ii) You may use PFD to extract a proportional raw exhaust sample for any batch or continuous gaseous emission sampling over any transient duty cycle, any steady-state duty cycle, or any ramped-modal cycle.

(iii) You may use PFD to extract a proportional raw exhaust sample for any batch or continuous field-testing.

(iv) You may use PFD to extract a proportional diluted exhaust sample from a CVS for any batch or continuous emission sampling.

(v) You may use PFD to extract a constant raw or diluted exhaust sample for any continuous emission sampling.

(vi) You may use PFD to extract a constant raw or diluted exhaust sample for any steady-state emission sampling.

(2) *Constant dilution-ratio PFD*. Do one of the following for constant dilution-ratio PFD:

(i) Dilute an already proportional flow. For example, you may do this as a way of performing secondary dilution from a CVS tunnel to achieve overall dilution ratio for PM sampling.

(ii) Continuously measure constituent concentrations. For example, you might dilute to precondition a sample of raw exhaust to control its temperature, humidity, or constituent concentrations upstream of continuous analyzers. In this case, you must take into account the dilution ratio before multiplying the continuous concentration by the sampled exhaust flow rate.

(iii) Extract a proportional sample from a separate constant dilution ratio PFD system. For example, you might use a variable-flow pump to proportionally fill a gaseous storage medium such as a bag from a PFD system. In this case, the proportional sampling must meet the same specifications as varying dilution ratio PFD in paragraph (d)(3) of this section.

(iv) For each mode of a discrete-mode test (such as a locomotive notch setting or a specific setting for speed and torque), use a constant dilution ratio for any PM sampling. You must change the overall PM sampling system dilution ratio between modes so that the dilution ratio on the mode with the highest exhaust flow rate meets § 1065.140(e)(2) and the dilution ratios on all other modes is higher than this (minimum) dilution ratio by the ratio of the maximum exhaust flow rate to the exhaust flow rate of the corresponding other mode. This is the

same dilution ratio requirement for RMC or field transient testing. You must account for this change in dilution ratio in your emission calculations.

(3) *Varying dilution-ratio PFD.* All the following provisions apply for varying dilution-ratio PFD:

(i) Use a control system with sensors and actuators that can maintain proportional sampling over intervals as short as 200 ms (i.e., 5 Hz control).

(ii) For control input, you may use any sensor output from one or more measurements; for example, intake-air flow, fuel flow, exhaust flow, engine speed, and intake manifold temperature and pressure.

(iii) Account for any emission transit time in the PFD system, as necessary.

(iv) You may use preprogrammed data if they have been determined for the specific test site, duty cycle, and test engine from which you dilute emissions.

(v) We recommend that you run practice cycles to meet the verification criteria in §1065.545. Note that you must verify every emission test by meeting the verification criteria with the data from that specific test. Data from previously verified practice cycles or other tests may not be used to verify a different emission test.

(vi) You may not use a PFD system that requires preparatory tuning or calibration with a CVS or with the emission results from a CVS. Rather, you must be able to independently calibrate the PFD.

(e) *Dilution air temperature, dilution ratio, residence time, and temperature control of PM samples.* Dilute PM samples at least once upstream of transfer lines. You may dilute PM samples upstream of a transfer line using full-flow dilution, or partial-flow dilution immediately downstream of a PM probe. In the case of partial-flow dilution, you may have up to 26 cm of insulated length between the end of the probe and the dilution stage, but we recommend that the length be as short as practical. The intent of these specifications is to minimize heat transfer to or from the emission sample before the final stage of dilution, other than the heat you may need to add to prevent aqueous condensation. This is accomplished by initially cooling the sample through dilution. Configure dilution systems as follows:

(1) Set the dilution air temperature to (25 ±5) °C. Use good engineering judgment to select a location to measure this temperature that is as close as practical upstream of the point where dilution air mixes with raw exhaust.

(2) For any PM dilution system (i.e., CVS or PFD), add dilution air to the raw exhaust such that the minimum overall ratio of diluted exhaust to raw exhaust is within the range of (5:1 to 7:1) and is at least 2:1 for any primary dilution stage. Base this minimum value on the maximum engine exhaust flow rate for a given test interval. Either measure the maximum exhaust flow during a practice run of the test interval or estimate it based on good engineering judgment (for example, you might rely on manufacturer-published literature).

(3) Configure any PM dilution system to have an overall residence time of (1.0 to 5.5) s, as measured from the location of initial dilution air introduction to the location where PM is collected on the sample media. Also configure the system to have a residence time of at least 0.50 s, as measured from the location of final dilution air introduction to the location where PM is collected on the sample media. When determining residence times within sampling system volumes, use an assumed flow temperature of 25 °C and pressure of 101.325 kPa.

(4) Control sample temperature to a (47 ±5) °C tolerance, as measured anywhere within 20 cm upstream or downstream of the PM storage media (such as a filter). Measure this temperature with a bare-wire junction thermocouple with wires that are (0.500 ±0.025) mm diameter, or with another suitable instrument that has equivalent performance.

[79 FR 23754, Apr. 28, 2014, as amended at 81 FR 74162, Oct. 25, 2016]

EFFECTIVE DATE NOTE: At 86 FR 34534, June 29, 2021, §1065.140 was amended effective July 29, 2021.

§ 1065.145 Gaseous and PM probes, transfer lines, and sampling system components.

(a) *Continuous and batch sampling.* Determine the total mass of each constituent with continuous or batch sampling. Both types of sampling systems have probes, transfer lines, and other sampling system components that are described in this section.

(b) *Options for engines with multiple exhaust stacks.* Measure emissions from a test engine as described in this paragraph (b) if it has multiple exhaust stacks. You may choose to use different measurement procedures for different pollutants under this paragraph (b) for a given test. For purposes of this part 1065, the test engine includes all the devices related to converting the chemical energy in the fuel to the engine's mechanical output energy. This may or may not involve vehicle- or equipment-based devices. For example, all of an engine's cylinders are considered to be part of the test engine even if the exhaust is divided into separate exhaust stacks. As another example, all the cylinders of a diesel-electric locomotive are considered to be part of the test engine even if they transmit power through separate output shafts, such as might occur with multiple engine-generator sets working in tandem. Use one of the following procedures to measure emissions with multiple exhaust stacks:

(1) Route the exhaust flow from the multiple stacks into a single flow as described in § 1065.130(c)(6). Sample and measure emissions after the exhaust streams are mixed. Calculate the emissions as a single sample from the entire engine. We recommend this as the preferred option, since it requires only a single measurement and calculation of the exhaust molar flow for the entire engine.

(2) Sample and measure emissions from each stack and calculate emissions separately for each stack. Add the mass (or mass rate) emissions from each stack to calculate the emissions from the entire engine. Testing under this paragraph (b)(2) requires measuring or calculating the exhaust molar flow for each stack separately. If the exhaust molar flow in each stack cannot be calculated from combustion air flow(s), fuel flow(s), and measured gaseous emissions, and it is impractical to measure the exhaust molar flows directly, you may alternatively proportion the engine's calculated total exhaust molar flow rate (where the flow is calculated using combustion air mass flow(s), fuel mass flow(s), and emissions concentrations) based on exhaust molar flow measurements in each stack using a less accurate, nontraceable method. For example, you may use a total pressure probe and static pressure measurement in each stack.

(3) Sample and measure emissions from one stack and repeat the duty cycle as needed to collect emissions from each stack separately. Calculate the emissions from each stack and add the separate measurements to calculate the mass (or mass rate) emissions from the entire engine. Testing under this paragraph (b)(3) requires measuring or calculating the exhaust molar flow for each stack separately. You may alternatively proportion the engine's calculated total exhaust molar flow rate based on calculation and measurement limitations as described in paragraph (b)(2) of this section. Use the average of the engine's total power or work values from the multiple test runs to calculate brake-specific emissions. Divide the total mass (or mass rate) of each emission by the average power (or work). You may alternatively use the engine power or work associated with the corresponding stack during each test run if these values can be determined for each stack separately.

(4) Sample and measure emissions from each stack separately and calculate emissions for the entire engine based on the stack with the highest concentration. Testing under this paragraph (b)(4) requires only a single exhaust flow measurement or calculation for the entire engine. You may determine which stack has the highest concentration by performing multiple test runs, reviewing the results of earlier tests, or using good engineering judgment. Note that the highest concentration of different pollutants may occur in different stacks. Note also that the stack with the highest concentration of a pollutant during a test interval for

field testing may be a different stack than the one you identified based on average concentrations over a duty cycle.

(5) Sample emissions from each stack separately and combine the wet sample streams from each stack proportionally to the exhaust molar flows in each stack. Measure the emission concentrations and calculate the emissions for the entire engine based on these weighted concentrations. Testing under this paragraph (b)(5) requires measuring or calculating the exhaust molar flow for each stack separately during the test run to proportion the sample streams from each stack. If it is impractical to measure the exhaust molar flows directly, you may alternatively proportion the wet sample streams based on less accurate, non-traceable flow methods. For example, you may use a total pressure probe and static pressure measurement in each stack. The following restrictions apply for testing under this paragraph (b)(5):

(i) You must use an accurate, traceable measurement or calculation of the engine's total exhaust molar flow rate for calculating the mass of emissions from the entire engine.

(ii) You may dry the single, combined, proportional sample stream; you may not dry the sample streams from each stack separately.

(iii) You must measure and proportion the sample flows from each stack with active flow controls. For PM sampling, you must measure and proportion the diluted sample flows from each stack with active flow controls that use only smooth walls with no sudden change in cross-sectional area. For example, you may control the dilute exhaust PM sample flows using electrically conductive vinyl tubing and a control device that pinches the tube over a long enough transition length so no flow separation occurs.

(iv) For PM sampling, the transfer lines from each stack must be joined so the angle of the joining flows is 12.5° or less. Note that the exhaust manifold must meet the same specifications as the transfer line according to paragraph (d) of this section.

(6) Sample emissions from each stack separately and combine the wet sample streams from each stack equally. Measure the emission concentrations and calculate the emissions for the entire engine based on these measured concentrations. Testing under this paragraph (b)(6) assumes that the raw-exhaust and sample flows are the same for each stack. The following restrictions apply for testing under this paragraph (b)(6):

(i) You must measure and demonstrate that the sample flow from each stack is within 5% of the value from the stack with the highest sample flow. You may alternatively ensure that the stacks have equal flow rates without measuring sample flows by designing a passive sampling system that meets the following requirements:

(A) The probes and transfer line branches must be symmetrical, have equal lengths and diameters, have the same number of bends, and have no filters.

(B) If probes are designed such that they are sensitive to stack velocity, the stack velocity must be similar at each probe. For example, a static pressure probe used for gaseous sampling is not sensitive to stack velocity.

(C) The stack static pressure must be the same at each probe. You can meet this requirement by placing probes at the end of stacks that are vented to atmosphere.

(D) For PM sampling, the transfer lines from each stack must be joined so the angle of the joining flows is 12.5° or less. Note that the exhaust manifold must meet the same specifications as the transfer line according to paragraph (d) of this section.

(ii) You may use the procedure in this paragraph (b)(6) only if you perform an analysis showing that the resulting error due to imbalanced stack flows and concentrations is either at or below 2%. You may alternatively show that the resulting error does not impact your ability to demonstrate compliance with applicable standards. For example, you may use less accurate, non-traceable measurements of emission concentrations and molar flow in each stack and demonstrate that the imbalances in flows and concentrations cause 2% or less error.

(iii) For a two-stack engine, you may use the procedure in this paragraph (b)(6) only if you can show that the

stack with the higher flow has the lower average concentration for each pollutant over the duty cycle.

(iv) You must use an accurate, traceable measurement or calculation of the engine's total exhaust molar flow rate for calculating the mass of emissions from the entire engine.

(v) You may dry the single, equally combined, sample stream; you may not dry the sample streams from each stack separately.

(vi) You may determine your exhaust flow rates with a chemical balance of exhaust gas concentrations and either intake air flow or fuel flow.

(c) *Gaseous and PM sample probes.* A probe is the first fitting in a sampling system. It protrudes into a raw or diluted exhaust stream to extract a sample, such that its inside and outside surfaces are in contact with the exhaust. A sample is transported out of a probe into a transfer line, as described in paragraph (d) of this section. The following provisions apply to sample probes:

(1) *Probe design and construction.* Use sample probes with inside surfaces of 300 series stainless steel or, for raw exhaust sampling, use any nonreactive material capable of withstanding raw exhaust temperatures. Locate sample probes where constituents are mixed to their mean sample concentration. Take into account the mixing of any crankcase emissions that may be routed into the raw exhaust. Locate each probe to minimize interference with the flow to other probes. We recommend that all probes remain free from influences of boundary layers, wakes, and eddies—especially near the outlet of a raw-exhaust stack where unintended dilution might occur. Make sure that purging or back-flushing of a probe does not influence another probe during testing. You may use a single probe to extract a sample of more than one constituent as long as the probe meets all the specifications for each constituent.

(2) *Gaseous sample probes.* Use either single-port or multi-port probes for sampling gaseous emissions. You may orient these probes in any direction relative to the raw or diluted exhaust flow. For some probes, you must control sample temperatures, as follows:

(i) For probes that extract NO_X from diluted exhaust, control the probe's wall temperature to prevent aqueous condensation.

(ii) For probes that extract hydrocarbons for THC or NMHC analysis from the diluted exhaust of compression-ignition engines, two-stroke spark-ignition engines, or four-stroke spark-ignition engines at or below 19 kW, we recommend heating the probe to minimize hydrocarbon contamination consistent with good engineering judgment. If you routinely fail the contamination check in the 1065.520 pretest check, we recommend heating the probe section to approximately 190 °C to minimize contamination.

(3) *PM sample probes.* Use PM probes with a single opening at the end. Orient PM probes to face directly upstream. If you shield a PM probe's opening with a PM pre-classifier such as a hat, you may not use the preclassifier we specify in paragraph (f)(1) of this section. We recommend sizing the inside diameter of PM probes to approximate isokinetic sampling at the expected mean flow rate.

(d) *Transfer lines.* You may use transfer lines to transport an extracted sample from a probe to an analyzer, storage medium, or dilution system, noting certain restrictions for PM sampling in §1065.140(e). Minimize the length of all transfer lines by locating analyzers, storage media, and dilution systems as close to probes as practical. We recommend that you minimize the number of bends in transfer lines and that you maximize the radius of any unavoidable bend. Avoid using 90° elbows, tees, and cross-fittings in transfer lines. Where such connections and fittings are necessary, take steps, using good engineering judgment, to ensure that you meet the temperature tolerances in this paragraph (d). This may involve measuring temperature at various locations within transfer lines and fittings. You may use a single transfer line to transport a sample of more than one constituent, as long as the transfer line meets all the specifications for each constituent. The following construction and temperature tolerances apply to transfer lines:

(1) *Gaseous samples*. Use transfer lines with inside surfaces of 300 series stainless steel, PTFE, Viton™, or any other material that you demonstrate has better properties for emission sampling. For raw exhaust sampling, use a non-reactive material capable of withstanding raw exhaust temperatures. You may use in-line filters if they do not react with exhaust constituents and if the filter and its housing meet the same temperature requirements as the transfer lines, as follows:

(i) For NO_X transfer lines upstream of either an NO_2-to-NO converter that meets the specifications of § 1065.378 or a chiller that meets the specifications of § 1065.376, maintain a sample temperature that prevents aqueous condensation.

(ii) For THC transfer lines for testing compression-ignition engines, two-stroke spark-ignition engines, or four-stroke spark-ignition engines at or below 19 kW, maintain a wall temperature tolerance throughout the entire line of (191 ±11) °C. If you sample from raw exhaust, you may connect an unheated, insulated transfer line directly to a probe. Design the length and insulation of the transfer line to cool the highest expected raw exhaust temperature to no lower than 191 °C, as measured at the transfer line's outlet. For dilute sampling, you may use a transition zone between the probe and transfer line of up to 92 cm to allow your wall temperature to transition to (191 ±11) °C.

(2) *PM samples*. We recommend heated transfer lines or a heated enclosure to minimize temperature differences between transfer lines and exhaust constituents. Use transfer lines that are inert with respect to PM and are electrically conductive on the inside surfaces. We recommend using PM transfer lines made of 300 series stainless steel. Electrically ground the inside surface of PM transfer lines.

(e) *Optional sample-conditioning components for gaseous sampling*. You may use the following sample-conditioning components to prepare gaseous samples for analysis, as long as you do not install or use them in a way that adversely affects your ability to show that your engines comply with all applicable gaseous emission standards.

(1) *NO_2-to-NO converter*. You may use an NO_2-to-NO converter that meets the converter conversion verification specified in § 1065.378 at any point upstream of a NO_X analyzer, sample bag, or other storage medium.

(2) *Sample dryer*. You may use either type of sample dryer described in this paragraph (e)(2) to decrease the effects of water on gaseous emission measurements. You may not use a chemical dryer, or use dryers upstream of PM sample filters.

(i) *Osmotic-membrane*. You may use an osmotic-membrane dryer upstream of any gaseous analyzer or storage medium, as long as it meets the temperature specifications in paragraph (d)(1) of this section. Because osmotic-membrane dryers may deteriorate after prolonged exposure to certain exhaust constituents, consult with the membrane manufacturer regarding your application before incorporating an osmotic-membrane dryer. Monitor the dewpoint, T_{dew}, and absolute pressure, p_{total}, downstream of an osmotic-membrane dryer. You may use continuously recorded values of T_{dew} and p_{total} in the amount of water calculations specified in § 1065.645. For our testing we may use average temperature and pressure values over the test interval or a nominal pressure value that we estimate as the dryer's average pressure expected during testing as constant values in the amount of water calculations specified in § 1065.645. For your testing, you may use the maximum temperature or minimum pressure values observed during a test interval or duty cycle or the high alarm temperature setpoint or low alarm pressure setpoint as constant values in the calculations specified in § 1065.645. For your testing, you may also use a nominal p_{total}, which you may estimate as the dryer's lowest absolute pressure expected during testing.

(ii) *Thermal chiller*. You may use a thermal chiller upstream of some gas analyzers and storage media. You may not use a thermal chiller upstream of a THC measurement system for compression-ignition engines, two-stroke spark-ignition engines, or four-stroke spark-ignition engines at or below 19 kW. If you use a thermal chiller upstream of an NO_2-to-NO converter or in

a sampling system without an NO_2-to-NO converter, the chiller must meet the NO_2 loss-performance check specified in § 1065.376. Monitor the dewpoint, T_{dew}, and absolute pressure, p_{total}, downstream of a thermal chiller. You may use continuously recorded values of T_{dew} and p_{total} in the amount of water calculations specified in § 1065.645. If it is valid to assume the degree of saturation in the thermal chiller, you may calculate T_{dew} based on the known chiller performance and continuous monitoring of chiller temperature, $T_{chiller}$. If it is valid to assume a constant temperature offset between $T_{chiller}$ and T_{dew}, due to a known and fixed amount of sample reheat between the chiller outlet and the temperature measurement location, you may factor in this assumed temperature offset value into emission calculations. If we ask for it, you must show by engineering analysis or by data the validity of any assumptions allowed by this paragraph (e)(2)(ii). For our testing we may use average temperature and pressure values over the test interval or a nominal pressure value that we estimate as the dryer's average pressure expected during testing as constant values in the calculations specified in § 1065.645. For your testing you may use the maximum temperature and minimum pressure values observed during a test interval or duty cycle or the high alarm temperature setpoint and the low alarm pressure setpoint as constant values in the amount of water calculations specified in § 1065.645. For your testing you may also use a nominal p_{total}, which you may estimate as the dryer's lowest absolute pressure expected during testing.

(3) *Sample pumps*. You may use sample pumps upstream of an analyzer or storage medium for any gas. Use sample pumps with inside surfaces of 300 series stainless steel, PTFE, or any other material that you demonstrate has better properties for emission sampling. For some sample pumps, you must control temperatures, as follows:

(i) If you use a NO_X sample pump upstream of either an NO_2-to-NO converter that meets § 1065.378 or a chiller that meets § 1065.376, it must be heated to prevent aqueous condensation.

(ii) For testing compression-ignition engines, two-stroke spark-ignition engines, or four-stroke spark-ignition engines at or below 19 kW, if you use a THC sample pump upstream of a THC analyzer or storage medium, its inner surfaces must be heated to a tolerance of (191 ±11) °C.

(4) *Ammonia Scrubber*. You may use ammonia scrubbers for any or all gaseous sampling systems to prevent interference with NH_3, poisoning of the NO_2-to-NO converter, and deposits in the sampling system or analyzers. Follow the ammonia scrubber manufacturer's recommendations or use good engineering judgment in applying ammonia scrubbers.

(f) *Optional sample-conditioning components for PM sampling*. You may use the following sample-conditioning components to prepare PM samples for analysis, as long as you do not install or use them in a way that adversely affects your ability to show that your engines comply with the applicable PM emission standards. You may condition PM samples to minimize positive and negative biases to PM results, as follows:

(1) *PM preclassifier*. You may use a PM preclassifier to remove large-diameter particles. The PM preclassifier may be either an inertial impactor or a cyclonic separator. It must be constructed of 300 series stainless steel. The preclassifier must be rated to remove at least 50% of PM at an aerodynamic diameter of 10 μm and no more than 1% of PM at an aerodynamic diameter of 1 μm over the range of flow rates for which you use it. Follow the preclassifier manufacturer's instructions for any periodic servicing that may be necessary to prevent a buildup of PM. Install the preclassifier in the dilution system downstream of the last dilution stage. Configure the preclassifier outlet with a means of bypassing any PM sample media so the preclassifier flow may be stabilized before starting a test. Locate PM sample media within 75 cm downstream of the preclassifier's exit. You may not use this preclassifier if you use a PM probe that already has a preclassifier. For example, if you use a hat-shaped preclassifier that is located immediately upstream of the probe in such a

way that it forces the sample flow to change direction before entering the probe, you may not use any other preclassifier in your PM sampling system.

(2) *Other components*. You may request to use other PM conditioning components upstream of a PM preclassifier, such as components that condition humidity or remove gaseous-phase hydrocarbons from the diluted exhaust stream. You may use such components only if we approve them under § 1065.10.

[75 FR 23030, Apr. 30, 2010; 79 FR 23756, Apr. 28, 2014]

EFFECTIVE DATE NOTE: At 86 FR 34534, June 29, 2021, § 1065.145 was amended, effective July 29, 2021.

§ 1065.150 Continuous sampling.

You may use continuous sampling techniques for measurements that involve raw or dilute sampling. Make sure continuous sampling systems meet the specifications in § 1065.145. Make sure continuous analyzers meet the specifications in subparts C and D of this part.

§ 1065.170 Batch sampling for gaseous and PM constituents.

Batch sampling involves collecting and storing emissions for later analysis. Examples of batch sampling include collecting and storing gaseous emissions in a bag or collecting and storing PM on a filter. You may use batch sampling to store emissions that have been diluted at least once in some way, such as with CVS, PFD, or BMD. You may use batch-sampling to store undiluted emissions.

(a) *Sampling methods*. If you extract from a constant-volume flow rate, sample at a constant-volume flow rate as follows:

(1) Verify proportional sampling after an emission test as described in § 1065.545. Use good engineering judgment to select storage media that will not significantly change measured emission levels (either up or down). For example, do not use sample bags for storing emissions if the bags are permeable with respect to emissions or if they off gas emissions to the extent that it affects your ability to demonstrate compliance with the applicable gaseous emission standards. As another example, do not use PM filters that irreversibly absorb or adsorb gases to the extent that it affects your ability to demonstrate compliance with the applicable PM emission standard.

(2) You must follow the requirements in § 1065.140(e)(2) related to PM dilution ratios. For each filter, if you expect the net PM mass on the filter to exceed 400 μg, assuming a 38 mm diameter filter stain area, you may take the following actions in sequence:

(i) For discrete-mode testing only, you may reduce sample time as needed to target a filter loading of 400 μg, but not below the minimum sample time specified in the standard-setting part.

(ii) Reduce filter face velocity as needed to target a filter loading of 400 μg, down to 50 cm/s or less.

(iii) Increase overall dilution ratio above the values specified in § 1065.140(e)(2) to target a filter loading of 400 μg.

(b) *Gaseous sample storage media*. Store gas volumes in sufficiently clean containers that minimally off-gas or allow permeation of gases. Use good engineering judgment to determine acceptable thresholds of storage media cleanliness and permeation. To clean a container, you may repeatedly purge and evacuate a container and you may heat it. Use a flexible container (such as a bag) within a temperature-controlled environment, or use a temperature controlled rigid container that is initially evacuated or has a volume that can be displaced, such as a piston and cylinder arrangement. Use containers meeting the specifications in the Table 1 of this section, noting that you may request to use other container materials under § 1065.10. Sample temperatures must stay within the following ranges for each container material:

(1) Up to 40 °C for Tedlar™ and Kynar™..

(2) (191 ±11) °C for Teflon™ and 300 series stainless steel used with measuring THC or NMHC from compression-ignition engines, two-stroke spark-ignition engines, and four-stroke spark-ignition engines at or below 19 kW. For all other engines and pollutants, these materials may be used for sample temperatures up to 202 °C.

TABLE 1 OF § 1065.170—CONTAINER MATERIALS FOR GASEOUS BATCH SAMPLING

Emissions	Engine type	
	Compression-ignition Two-stroke spark-ignition Four-stroke spark-ignition at or below 19 kW	All other engines
CO, CO_2, O_2, CH_4, C_2H_6, C_3H_8, NO, NO_2, N_2O.	Tedlar™, Kynar™, Teflon™, or 300 series stainless steel.	Tedlar™, Kynar™, Teflon™, or 300 series stainless steel.
THC, NMHC	Teflon™ or 300 series stainless steel	Tedlar™, Kynar™, Teflon™, or 300 series stainless steel.

(c) *PM sample media*. Apply the following methods for sampling particulate emissions:

(1) If you use filter-based sampling media to extract and store PM for measurement, your procedure must meet the following specifications:

(i) If you expect that a filter's total surface concentration of PM will exceed 400 μg, assuming a 38 mm diameter filter stain area, for a given test interval, you may use filter media with a minimum initial collection efficiency of 98%; otherwise you must use a filter media with a minimum initial collection efficiency of 99.7%. Collection efficiency must be measured as described in ASTM D2986 (incorporated by reference in § 1065.1010), though you may rely on the sample-media manufacturer's measurements reflected in their product ratings to show that you meet this requirement.

(ii) The filter must be circular, with an overall diameter of 46.50 ±0.6 mm and an exposed diameter of at least 38 mm. See the cassette specifications in paragraph (c)(1)(vii) of this section.

(iii) We highly recommend that you use a pure PTFE filter material that does not have any flow-through support bonded to the back and has an overall thickness of 40 ±20 μm. An inert polymer ring may be bonded to the periphery of the filter material for support and for sealing between the filter cassette parts. We consider Polymethylpentene (PMP) and PTFE inert materials for a support ring, but other inert materials may be used. See the cassette specifications in paragraph (c)(1)(vii) of this section. We allow the use of PTFE-coated glass fiber filter material, as long as this filter media selection does not affect your ability to demonstrate compliance with the applicable standards, which we base on a pure PTFE filter material. Note that we will use pure PTFE filter material for compliance testing, and we may require you to use pure PTFE filter material for any compliance testing we require, such as for selective enforcement audits.

(iv) You may request to use other filter materials or sizes under the provisions of § 1065.10.

(v) To minimize turbulent deposition and to deposit PM evenly on a filter, use a filter holder with a 12.5° (from center) divergent cone angle to transition from the transfer-line inside diameter to the exposed diameter of the filter face. Use 300 series stainless steel for this transition.

(vi) Maintain a filter face velocity near 100 cm/s with less than 5% of the recorded flow values exceeding 100 cm/s, unless you expect the net PM mass on the filter to exceed 400 μg, assuming a 38 mm diameter filter stain area. Measure face velocity as the volumetric flow rate of the sample at the pressure upstream of the filter and temperature of the filter face as measured in § 1065.140(e), divided by the filter's exposed area. You may use the exhaust stack or CVS tunnel pressure for the upstream pressure if the pressure drop through the PM sampler up to the filter is less than 2 kPa.

(vii) Use a clean cassette designed to the specifications of Figure 1 of § 1065.170. In auto changer configurations, you may use cassettes of similar design. Cassettes must be made of one of the following materials: Delrin™, 300 series stainless steel, polycarbonate, acrylonitrile-butadiene-styrene (ABS) resin, or conductive polypropylene. We recommend that you keep filter cassettes clean by periodically washing or wiping them with a compatible solvent applied using a

lint-free cloth. Depending upon your cassette material, ethanol (C_2H_5OH) might be an acceptable solvent. Your cleaning frequency will depend on your engine's PM and HC emissions.

(viii) If you keep the cassette in the filter holder after sampling, prevent flow through the filter until either the holder or cassette is removed from the PM sampler. If you remove the cassettes from filter holders after sampling, transfer the cassette to an individual container that is covered or sealed to prevent communication of semi-volatile matter from one filter to another. If you remove the filter holder, cap the inlet and outlet. Keep them covered or sealed until they return to the stabilization or weighing environments.

(ix) The filters should not be handled outside of the PM stabilization and weighing environments and should be loaded into cassettes, filter holders, or auto changer apparatus before removal from these environments.

(2) You may use other PM sample media that we approve under § 1065.10, including non-filtering techniques. For example, you might deposit PM on an inert substrate that collects PM using electrostatic, thermophoresis, inertia, diffusion, or some other deposition mechanism, as approved.

Figure 1 of § 1065.170—PM filter cassette specifications.

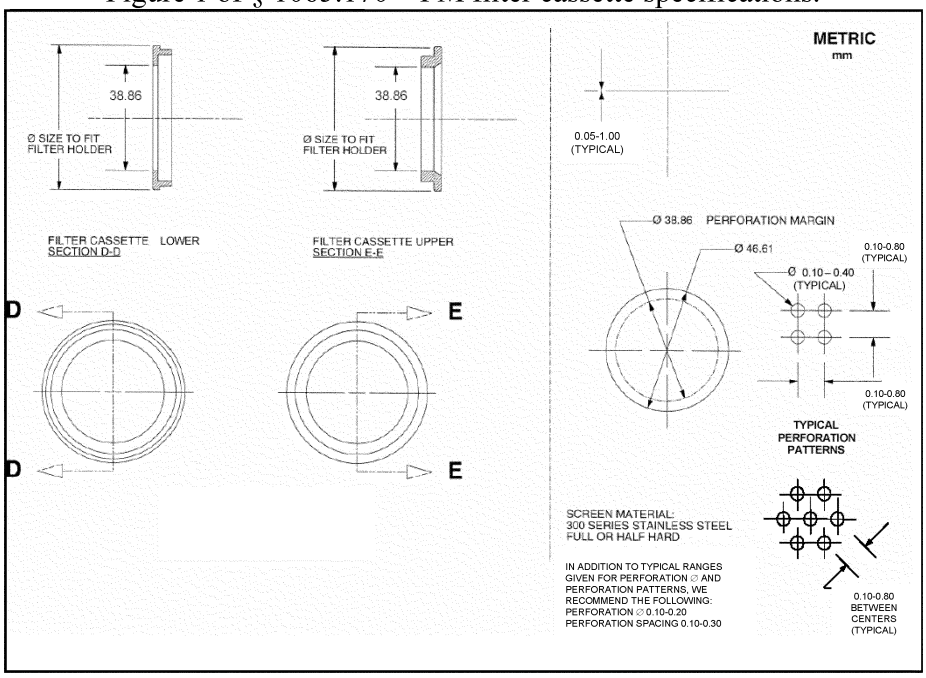

[70 FR 40516, July 13, 2005, as amended at 73 FR 37298, June 30, 2008; 73 FR 59321, Oct. 8, 2008; 76 FR 57440, Sept. 15, 2011;79 FR 23757, Apr. 28, 2014; 81 FR 74162, Oct. 25, 2016]

EFFECTIVE DATE NOTE: At 86 FR 34534, June 29, 2021, § 1065.170 was amended, effective July 29, 2021.

§ 1065.190 PM-stabilization and weighing environments for gravimetric analysis.

(a) This section describes the two environments required to stabilize and weigh PM for gravimetric analysis: the PM stabilization environment, where filters are stored before weighing; and

the weighing environment, where the balance is located. The two environments may share a common space. These volumes may be one or more rooms, or they may be much smaller, such as a glove box or an automated weighing system consisting of one or more countertop-sized environments.

(b) We recommend that you keep both the stabilization and the weighing environments free of ambient contaminants, such as dust, aerosols, or semi-volatile material that could contaminate PM samples. We recommend that these environments conform with an ''as-built'' Class Six clean room specification according to ISO 14644–1 (incorporated by reference in § 1065.1010); however, we also recommend that you deviate from ISO 14644–1 as necessary to minimize air motion that might affect weighing. We recommend maximum air-supply and air-return velocities of 0.05 m/s in the weighing environment.

(c) Verify the cleanliness of the PM-stabilization environment using reference filters, as described in § 1065.390(d).

(d) Maintain the following ambient conditions within the two environments during all stabilization and weighing:

(1) *Ambient temperature and tolerances.* Maintain the weighing environment at a tolerance of (22 ±1) °C. If the two environments share a common space, maintain both environments at a tolerance of (22 ±1) °C. If they are separate, maintain the stabilization environment at a tolerance of (22 ±3) °C.

(2) *Dewpoint.* Maintain a dewpoint of 9.5 °C in both environments. This dewpoint will control the amount of water associated with sulfuric acid (H_2SO_4) PM, such that 1.2216 grams of water will be associated with each gram of H_2SO_4.

(3) *Dewpoint tolerances.* If the expected fraction of sulfuric acid in PM is unknown, we recommend controlling dewpoint at within ±1 °C tolerance. This would limit any dewpoint-related change in PM to less than ±2%, even for PM that is 50% sulfuric acid. If you know your expected fraction of sulfuric acid in PM, we recommend that you select an appropriate dewpoint tolerance for showing compliance with emission standards using the following table as a guide:

TABLE 1 OF § 1065.190—DEWPOINT TOLERANCE AS A FUNCTION OF % PM CHANGE AND % SULFURIC ACID PM

Expected sulfuric acid fraction of PM	±0.5% PM mass change	±1% PM mass change	±2% PM mass change
5%	±3 °C	±6 °C	±12 °C
50%	±0.3 °C	±0.6 °C	±1.2 °C
100%	±0.15 °C	±0.3 °C	±0.6 °C

(e) Verify the following ambient conditions using measurement instruments that meet the specifications in subpart C of this part:

(1) Continuously measure dewpoint and ambient temperature. Use these values to determine if the stabilization and weighing environments have remained within the tolerances specified in paragraph (d) of this section for at least 60 min. before weighing sample media (e.g., filters). We recommend that you use an interlock that automatically prevents the balance from reporting values if either of the environments have not been within the applicable tolerances for the past 60 min.

(2) Continuously measure atmospheric pressure within the weighing environment. An acceptable alternative is to use a barometer that measures atmospheric pressure outside the weighing environment, as long as you can ensure that atmospheric pressure at the balance is always within ±100 Pa of that outside environment during weighing operations. Record atmospheric pressure as you weigh filters, and use these pressure values to perform the buoyancy correction in § 1065.690.

(f) We recommend that you install a balance as follows:

(1) Install the balance on a vibration-isolation platform to isolate it from external noise and vibration.

(2) Shield the balance from convective airflow with a static-dissipating draft shield that is electrically grounded.

(3) Follow the balance manufacturer's specifications for all preventive maintenance.

(4) Operate the balance manually or as part of an automated weighing system.

(g) Minimize static electric charge in the balance environment, as follows:

(1) Electrically ground the balance.

(2) Use 300 series stainless steel tweezers if PM sample media (e.g., filters) must be handled manually.

(3) Ground tweezers with a grounding strap, or provide a grounding strap for the operator such that the grounding strap shares a common ground with the balance. Make sure grounding straps have an appropriate resistor to protect operators from accidental shock.

(4) Provide a static-electricity neutralizer that is electrically grounded in common with the balance to remove static charge from PM sample media (e.g., filters), as follows:

(i) You may use radioactive neutralizers such as a Polonium (^{210}Po) source. Replace radioactive sources at the intervals recommended by the neutralizer manufacturer.

(ii) You may use other neutralizers, such as corona-discharge ionizers. If you use a corona-discharge ionizer, we recommend that you monitor it for neutral net charge according to the ionizer manufacturer's recommendations.

(5) We recommend that you use a device to monitor the static charge of PM sample media (e.g., filter) surface.

(6) We recommend that you neutralize PM sample media (e.g., filters) to within ±2.0 V of neutral. Measure static voltages as follows:

(i) Measure static voltage of PM sample media (e.g., filters) according to the electrostatic voltmeter manufacturer's instructions.

(ii) Measure static voltage of PM sample media (e.g., filters) while the media is at least 15 cm away from any grounded surfaces to avoid mirror image charge interference.

[70 FR 40516, July 13, 2005, as amended at 73 FR 37299, June 30, 2008; 73 FR 59323, Oct. 8, 2008; 76 FR 57440, Sept. 15, 2011]

§ 1065.195 PM-stabilization environment for in-situ analyzers.

(a) This section describes the environment required to determine PM in-situ. For in-situ analyzers, such as an inertial balance, this is the environment within a PM sampling system that surrounds the PM sample media (e.g., filters). This is typically a very small volume.

(b) Maintain the environment free of ambient contaminants, such as dust, aerosols, or semi-volatile material that could contaminate PM samples. Filter all air used for stabilization with HEPA filters. Ensure that HEPA filters are installed properly so that background PM does not leak past the HEPA filters.

(c) Maintain the following thermodynamic conditions within the environment before measuring PM:

(1) *Ambient temperature.* Select a nominal ambient temperature, T_{amb}, between (42 and 52) °C. Maintain the ambient temperature within ±1.0 °C of the selected nominal value.

(2) *Dewpoint.* Select a dewpoint, T_{dew}, that corresponds to T_{amb} such that $T_{dew} = (0.95T_{amb} - 11.40)$ °C. The resulting dewpoint will control the amount of water associated with sulfuric acid (H_2SO_4) PM, such that 1.1368 grams of water will be associated with each gram of H_2SO_4. For example, if you select a nominal ambient temperature of 47 °C, set a dewpoint of 33.3 °C.

(3) *Dewpoint tolerance.* If the expected fraction of sulfuric acid in PM is unknown, we recommend controlling dewpoint within ±1.0 °C. This would limit any dewpoint-related change in PM to less than ±2%, even for PM that is 50% sulfuric acid. If you know your expected fraction of sulfuric acid in PM, we recommend that you select an appropriate dewpoint tolerance for showing compliance with emission standards using Table 1 of §1065.190 as a guide:

(4) *Absolute pressure.* Use good engineering judgment to maintain a tolerance of absolute pressure if your PM measurement instrument requires it.

(d) Continuously measure dewpoint, temperature, and pressure using measurement instruments that meet the PM-stabilization environment specifications in subpart C of this part. Use these values to determine if the in-situ stabilization environment is within the tolerances specified in paragraph (c) of this section. Do not use any PM quantities that are recorded when any of these parameters exceed the applicable tolerances.

(e) If you use an inertial PM balance, we recommend that you install it as follows:

(1) Isolate the balance from any external noise and vibration that is within a frequency range that could affect the balance.

(2) Follow the balance manufacturer's specifications.

(f) If static electricity affects an inertial balance, you may use a static neutralizer, as follows:

(1) You may use a radioactive neutralizer such as a Polonium (^{210}Po) source or a Krypton (^{85}Kr) source. Replace radioactive sources at the intervals recommended by the neutralizer manufacturer.

(2) You may use other neutralizers, such as a corona-discharge ionizer. If you use a corona-discharge ionizer, we recommend that you monitor it for neutral net charge according to the ionizer manufacturer's recommendations.

[70 FR 40516, July 13, 2005, as amended at 73 FR 32799, June 30, 2008]

Subpart C—Measurement Instruments

§ 1065.201 Overview and general provisions.

(a) *Scope.* This subpart specifies measurement instruments and associated system requirements related to emission testing in a laboratory or similar environment and in the field. This includes laboratory instruments and portable emission measurement systems (PEMS) for measuring engine parameters, ambient conditions, flow-related parameters, and emission concentrations.

(b) *Instrument types.* You may use any of the specified instruments as described in this subpart to perform emission tests. If you want to use one of these instruments in a way that is not specified in this subpart, or if you want to use a different instrument, you must first get us to approve your alternate procedure under § 1065.10. Where we specify more than one instrument for a particular measurement, we may identify which instrument serves as the reference for comparing with an alternate procedure. You may generally use instruments with compensation algorithms that are functions of other gaseous measurements and the known or assumed fuel properties for the test fuel. The target value for any compensation algorithm is 0% (that is, no bias high and no bias low), regardless of the uncompensated signal's bias.

(c) *Measurement systems.* Assemble a system of measurement instruments that allows you to show that your engines comply with the applicable emission standards, using good engineering judgment. When selecting instruments, consider how conditions such as vibration, temperature, pressure, humidity, viscosity, specific heat, and exhaust composition (including trace concentrations) may affect instrument compatibility and performance.

(d) *Redundant systems.* For all measurement instruments described in this subpart, you may use data from multiple instruments to calculate test results for a single test. If you use redundant systems, use good engineering judgment to use multiple measured values in calculations or to disregard individual measurements. Note that you must keep your results from all measurements. This requirement applies whether or not you actually use the measurements in your calculations.

(e) *Range.* You may use an instrument's response above 100% of its operating range if this does not affect your ability to show that your engines comply with the applicable emission standards. Note that we require additional testing and reporting if an analyzer responds above 100% of its range. Auto-

ranging analyzers do not require additional testing or reporting.

(f) *Related subparts for laboratory testing*. Subpart D of this part describes how to evaluate the performance of the measurement instruments in this subpart. In general, if an instrument is specified in a specific section of this subpart, its calibration and verifications are typically specified in a similarly numbered section in subpart D of this part. For example, § 1065.290 gives instrument specifications for PM balances and § 1065.390 describes the corresponding calibrations and verifications. Note that some instruments also have other requirements in other sections of subpart D of this part. Subpart B of this part identifies specifications for other types of equipment, and subpart H of this part specifies engine fluids and analytical gases.

(g) *Field testing and testing with PEMS*. Subpart J of this part describes how to use these and other measurement instruments for field testing and other PEMS testing.

(h) *Recommended practices*. This subpart identifies a variety of recommended but not required practices for proper measurements. We believe in most cases it is necessary to follow these recommended practices for accurate and repeatable measurements. However, we do not specifically require you to follow these recommended practices to perform a valid test, as long as you meet the required calibrations and verifications of measurement systems specified in subpart D of this part. Similarly, we are not required to follow all recommended practices, as long as we meet the required calibrations and verifications. Our decision to follow or not follow a given recommendation when we perform a test does not depend on whether you followed it during your testing.

[70 FR 40516, July 13, 2005, as amended at 73 FR 37299, June 30, 2008; 75 FR 23033, Apr. 30, 2010; 79 FR 23758, Apr. 29, 2014]

§ 1065.202 Data updating, recording, and control.

Your test system must be able to update data, record data and control systems related to operator demand, the dynamometer, sampling equipment, and measurement instruments. Set up the measurement and recording equipment to avoid aliasing by ensuring that the sampling frequency is at least double that of the signal you are measuring, consistent with good engineering judgment; this may require increasing the sampling rate or filtering the signal. Use data acquisition and control systems that can record at the specified minimum frequencies, as follows:

TABLE 1 OF § 1065.202—DATA RECORDING AND CONTROL MINIMUM FREQUENCIES

Applicable test protocol section	Measured values	Minimum command and control frequency [a]	Minimum recording frequency [b c]
§ 1065.510	Speed and torque during an engine step-map.	1 Hz	1 mean value per step.
§ 1065.510	Speed and torque during an engine sweep-map.	5 Hz	1 Hz means.
§ 1065.514; § 1065.530	Transient duty cycle reference and feedback speeds and torques.	5 Hz	1 Hz means.
§ 1065.514; § 1065.530	Steady-state and ramped-modal duty cycle reference and feedback speeds and torques.	1 Hz	1 Hz.
§ 1065.520; § 1065.530; § 1065.550	Continuous concentrations of raw or dilute analyzers.		1 Hz.
§ 1065.520; § 1065.530 § 1065.550	Batch concentrations of raw or dilute analyzers.		1 mean value per test interval.
§ 1065.530; § 1065.545	Diluted exhaust flow rate from a CVS with a heat exchanger upstream of the flow measurement.		1 Hz.
§ 1065.530; § 1065.545	Diluted exhaust flow rate from a CVS without a heat exchanger upstream of the flow measurement.	5 Hz	1 Hz means.
§ 1065.530; § 1065.545	Intake-air or raw-exhaust flow rate		1 Hz means.

TABLE 1 OF § 1065.202—DATA RECORDING AND CONTROL MINIMUM FREQUENCIES—Continued

Applicable test protocol section	Measured values	Minimum command and control frequency [a]	Minimum recording frequency [b c]
§ 1065.530; § 1065.545	Dilution air flow if actively controlled (for example, a partial-flow PM sampling system) [d].	5 Hz	1 Hz means.
§ 1065.530; § 1065.545	Sample flow from a CVS that has a heat exchanger.	1 Hz	1 Hz.
§ 1065.530; § 1065.545	Sample flow from a CVS that does not have a heat exchanger.	5 Hz	1 Hz means.

[a] The specifications for minimum command and control frequency do not apply for CFVs that are not using active control.
[b] 1 Hz means are data reported from the instrument at a higher frequency, but recorded as a series of 1 s mean values at a rate of 1 Hz.
[c] For CFVs in a CVS, the minimum recording frequency is 1 Hz. The minimum recording frequency does not apply for CFVs used to control sampling from a CVS utilizing CFVs.
[d] Dilution air flow specifications do not apply for CVS dilution air.

[79 FR 23759, Apr. 28, 2014, as amended at 81 FR 74162, Oct. 25, 2016]

§ 1065.205 Performance specifications for measurement instruments.

Your test system as a whole must meet all the calibrations, verifications, and test-validation criteria specified outside this section for laboratory testing or field testing, as applicable. We recommend that your instruments meet the specifications in Table 1 of this section for all ranges you use for testing. We also recommend that you keep any documentation you receive from instrument manufacturers showing that your instruments meet the specifications in Table 1 of this section.

TABLE 1 OF § 1065.205—RECOMMENDED PERFORMANCE SPECIFICATIONS FOR MEASUREMENT INSTRUMENTS

Measurement instrument	Measured quantity symbol	Complete system rise time (t_{10-90}) and fall time (t_{90-10}) [a]	Recording update frequency	Accuracy [b]	Repeatability [b]	Noise [b]
Engine speed transducer.	f_n	1 s	1 Hz means	2% of pt. or 0.5% of max.	1% of pt. or 0.25% of max.	0.05% of max.
Engine torque transducer.	T	1 s	1 Hz means	2% of pt. or 1% of max.	1% of pt. or 0.5% of max.	0.05% of max.
Electrical work (active-power meter).	W	1 s	1 Hz means	2% of pt. or 0.5% of max.	1% of pt. or 0.25% of max.	0.05% of max.
General pressure transducer (not a part of another instrument).	p	5 s	1 Hz	2% of pt. or 1% of max.	1% of pt. or 0.5% of max.	0.1% of max.
Atmospheric pressure meter for PM-stabilization and balance environments.	p_{atmos}	50 s	5 times per hour.	50 Pa	25 Pa	5 Pa
General purpose atmospheric pressure meter.	p_{atmos}	50 s	5 times per hour.	250 Pa	100Pa	50 Pa
Temperature sensor for PM-stabilization and balance environments.	T	50 s	0.1 Hz	0.25 K	0.1 K	0.1 K
Other temperature sensor (not a part of another instrument).	T	10 s	0.5 Hz	0.4% of pt. K or 0.2% of max K.	0.2% of pt. K or 0.1% of max K.	0.1% of max.
Dewpoint sensor for intake air, PM-stabilization and balance environments.	T_{dew}	50 s	0.1 Hz	0.25 K	0.1 K	0.02 K

TABLE 1 OF § 1065.205—RECOMMENDED PERFORMANCE SPECIFICATIONS FOR MEASUREMENT INSTRUMENTS—Continued

Measurement instrument	Measured quantity symbol	Complete system rise time (t_{10-90}) and fall time (t_{90-10}) [a]	Recording update frequency	Accuracy [b]	Repeatability [b]	Noise [b]
Other dewpoint sensor.	T_{dew}	50 s	0.1 Hz	1 K	0.5 K	0.1 K
Fuel flow meter [c] (Fuel totalizer).	$\dot{m}$	5 s (—)	1 Hz (—)	2% of pt. or 1.5% of max.	1% of pt. or 0.75% of max.	0.5% of max.
Total diluted exhaust meter (CVS) [c] (With heat exchanger before meter).	$\dot{n}$	1 s (5 s)	1 Hz means (1 Hz)	2% of pt. or 1.5% of max.	1% of pt. or 0.75% of max.	1% of max.
Dilution air, inlet air, exhaust, and sample flow meters [c].	$\dot{n}$	1 s	1 Hz means of 5 Hz samples.	2.5% of pt. or 1.5% of max.	1.25% of pt. or 0.75% of max.	1% of max.
Continuous gas analyzer.	x	5 s	1 Hz	2% of pt. or 2% of meas.	1% of pt. or 1% of meas.	1% of max.
Batch gas analyzer	x			2% of pt. or 2% of meas.	1% of pt. or 1% of meas.	1% of max.
Gravimetric PM balance.	m_{PM}			See § 1065.790	0.5 µg	
Inertial PM balance	m_{PM}	5 s	1 Hz	2% of pt. or 2% of meas.	1% of pt. or 1% of meas.	0.2% of max

[a] The performance specifications identified in the table apply separately for rise time and fall time.
[b] Accuracy, repeatability, and noise are all determined with the same collected data, as described in § 1065.305, and based on absolute values. "pt." refers to the overall flow-weighted mean value expected at the standard; "max" refers to the peak value expected at the standard over any test interval, not the maximum of the instrument's range; "meas" refers to the actual flow-weighted mean measured over any test interval.
[c] The procedure for accuracy, repeatability and noise measurement described in § 1065.305 may be modified for flow meters to allow noise to be measured at the lowest calibrated value instead of zero flow rate.

[79 FR 23759, Apr. 28, 2014]

EFFECTIVE DATE NOTE: At 86 FR 34534, June 29, 2021, § 1065.205 was revised, effective July 29, 2021.

MEASUREMENT OF ENGINE PARAMETERS AND AMBIENT CONDITIONS

§ 1065.210 Work input and output sensors.

(a) *Application*. Use instruments as specified in this section to measure work inputs and outputs during engine operation. We recommend that you use sensors, transducers, and meters that meet the specifications in Table 1 of § 1065.205. Note that your overall systems for measuring work inputs and outputs must meet the linearity verifications in § 1065.307. We recommend that you measure work inputs and outputs where they cross the system boundary as shown in Figure 1 of § 1065.210. The system boundary is different for air-cooled engines than for liquid-cooled engines. If you choose to measure work before or after a work conversion, relative to the system boundary, use good engineering judgment to estimate any work-conversion losses in a way that avoids overestimation of total work. For example, if it is impractical to instrument the shaft of an exhaust turbine generating electrical work, you may decide to measure its converted electrical work. As another example, you may decide to measure the tractive (i.e., electrical output) power of a locomotive, rather than the brake power of the locomotive engine. In these cases, divide the electrical work by accurate values of electrical generator efficiency ($\eta<1$), or assume an efficiency of 1 ($\eta = 1$), which would over-estimate brake-specific emissions. For the example of using locomotive tractive power with a generator efficiency of 1 ($\eta = 1$), this means using the tractive power as the brake power in emission calculations. Do not underestimate any work conversion efficiencies for any components outside the system boundary that do not return work into the system boundary. And do not overestimate any work conversion efficiencies for components outside the system boundary that do return work into the system boundary.

In all cases, ensure that you are able to accurately demonstrate compliance with the applicable standards.

Figure 1 of §1065.210: Work inputs, outputs, and system boundaries for liquid-cooled and air-cooled engines.

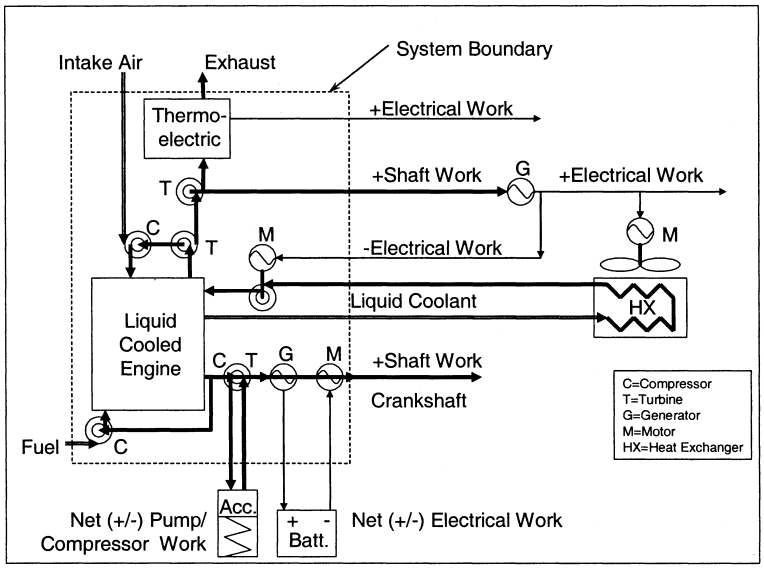

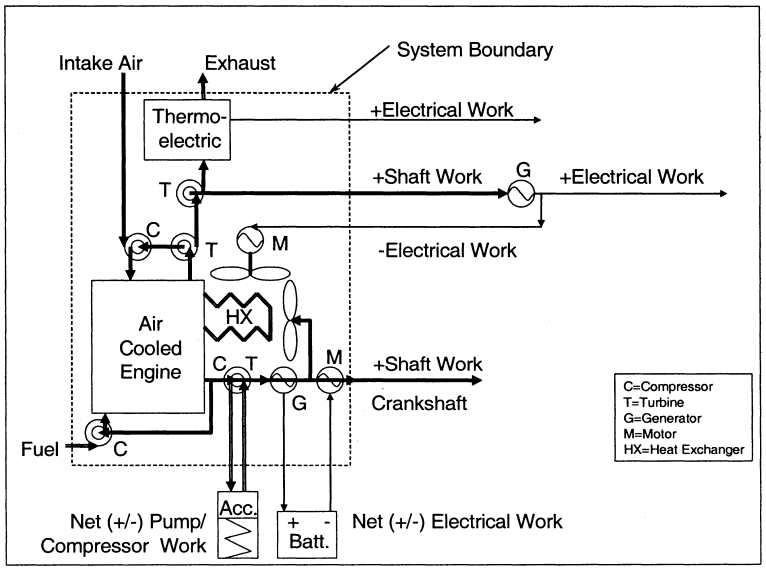

(b) *Shaft work*. Use speed and torque transducer outputs to calculate total work according to § 1065.650.

(1) *Speed*. Use a magnetic or optical shaft-position detector with a resolution of at least 60 counts per revolution, in combination with a frequency counter that rejects common-mode noise.

(2) *Torque*. You may use a variety of methods to determine engine torque. As needed, and based on good engineering judgment, compensate for torque induced by the inertia of accelerating and decelerating components connected to the flywheel, such as the drive shaft and dynamometer rotor. Use any of the following methods to determine engine torque:

(i) Measure torque by mounting a strain gage or similar instrument inline between the engine and dynamometer.

(ii) Measure torque by mounting a strain gage or similar instrument on a lever arm connected to the dynamometer housing.

(iii) Calculate torque from internal dynamometer signals, such as armature current, as long as you calibrate this measurement as described in § 1065.310.

(c) *Electrical work*. Use a watt-hour meter output to calculate total work according to § 1065.650. Use a watt-hour meter that outputs active power. Watt-hour meters typically combine a Wheatstone bridge voltmeter and a Hall-effect clamp-on ammeter into a single microprocessor-based instrument that analyzes and outputs several parameters, such as alternating or direct current voltage, current, power factor, apparent power, reactive power, and active power.

(d) *Pump, compressor or turbine work*. Use pressure transducer and flow-meter outputs to calculate total work according to § 1065.650. For flow meters, see §§ 1065.220 through 1065.248.

[70 FR 40516, July 13, 2005, as amended at 73 FR 37300, June 30, 2008; 79 FR 23760, Apr. 28, 2014]

§ 1065.215 Pressure transducers, temperature sensors, and dewpoint sensors.

(a) *Application*. Use instruments as specified in this section to measure pressure, temperature, and dewpoint.

(b) *Component requirements*. We recommend that you use pressure transducers, temperature sensors, and dewpoint sensors that meet the specifications in Table 1 of § 1065.205. Note that your overall systems for measuring pressure, temperature, and dewpoint must meet the calibration and verifications in § 1065.315.

(c) *Temperature*. For PM-balance environments or other precision temperature measurements over a narrow temperature range, we recommend thermistors. For other applications we recommend thermocouples that are not grounded to the thermocouple sheath. You may use other temperature sensors, such as resistive temperature detectors (RTDs).

(d) *Pressure*. Pressure transducers must be located in a temperature-controlled environment, or they must compensate for temperature changes over their expected operating range. Transducer materials must be compatible with the fluid being measured. For atmospheric pressure or other precision pressure measurements, we recommend either capacitance-type, quartz crystal, or laser-interferometer transducers. For other applications, we recommend either strain gage or capacitance-type pressure transducers. You may use other pressure-measurement instruments, such as manometers, where appropriate.

(e) *Dewpoint*. For PM-stabilization environments, we recommend chilled-surface hygrometers, which include chilled mirror detectors and chilled surface acoustic wave (SAW) detectors. For other applications, we recommend thin-film capacitance sensors. You may use other dewpoint sensors, such as a wet-bulb/dry-bulb psychrometer, where appropriate.

[70 FR 40516, July 13, 2005, as amended at 73 FR 37300, June 30, 2008]

FLOW-RELATED MEASUREMENTS

§ 1065.220 Fuel flow meter.

(a) *Application*. You may use fuel flow in combination with a chemical balance of fuel, inlet air, and raw exhaust to calculate raw exhaust flow as described in § 1065.655(f), as follows:

(1) Use the actual value of calculated raw exhaust flow rate in the following cases:

(i) For multiplying raw exhaust flow rate with continuously sampled concentrations.

(ii) For multiplying total raw exhaust flow with batch-sampled concentrations.

(iii) For calculating the dilution air flow for background correction as described in § 1065.667.

(2) In the following cases, you may use a fuel flow meter signal that does not give the actual value of raw exhaust, as long as it is linearly proportional to the exhaust molar flow rate's actual calculated value:

(i) For feedback control of a proportional sampling system, such as a partial-flow dilution system.

(ii) For multiplying with continuously sampled gas concentrations, if the same signal is used in a chemical-balance calculation to determine work from brake-specific fuel consumption and fuel consumed.

(b) *Component requirements*. We recommend that you use a fuel flow meter that meets the specifications in Table 1 of § 1065.205. We recommend a fuel flow meter that measures mass directly, such as one that relies on gravimetric or inertial measurement principles. This may involve using a meter with one or more scales for weighing fuel or using a Coriolis meter. Note that your overall system for measuring fuel flow must meet the linearity verification in § 1065.307 and the calibration and verifications in § 1065.320.

(c) *Recirculating fuel*. In any fuel-flow measurement, account for any fuel that bypasses the engine or returns from the engine to the fuel storage tank.

(d) *Flow conditioning*. For any type of fuel flow meter, condition the flow as needed to prevent wakes, eddies, circulating flows, or flow pulsations from affecting the accuracy or repeatability of the meter. You may accomplish this by using a sufficient length of straight tubing (such as a length equal to at least 10 pipe diameters) or by using specially designed tubing bends, straightening fins, or pneumatic pulsation dampeners to establish a steady and predictable velocity profile upstream of the meter. Condition the flow as needed to prevent any gas bubbles in the fuel from affecting the fuel meter.

[70 FR 40516, July 13, 2005, as amended at 73 FR 37300, June 30, 2008; 76 FR 57441, Sept. 15, 2011; 81 FR 74162, Oct. 25, 2016]

EFFECTIVE DATE NOTE: At 86 FR 34536, June 29, 2021, § 1065.220 was amended, effective July 29, 2021.

§ 1065.225 Intake-air flow meter.

(a) *Application*. You may use an intake-air flow meter in combination with a chemical balance of fuel, inlet air, and exhaust to calculate raw exhaust flow as described in § 1065.655(f) and (g), as follows:

(1) Use the actual value of calculated raw exhaust in the following cases:

(i) For multiplying raw exhaust flow rate with continuously sampled concentrations.

(ii) For multiplying total raw exhaust flow with batch-sampled concentrations.

(iii) For verifying minimum dilution ratio for PM batch sampling as described in § 1065.546.

(iv) For calculating the dilution air flow for background correction as described in § 1065.667.

(2) In the following cases, you may use an intake-air flow meter signal that does not give the actual value of raw exhaust, as long as it is linearly proportional to the exhaust flow rate's actual calculated value:

(i) For feedback control of a proportional sampling system, such as a partial-flow dilution system.

(ii) For multiplying with continuously sampled gas concentrations, if the same signal is used in a chemical-balance calculation to determine work from brake-specific fuel consumption and fuel consumed.

(b) *Component requirements*. We recommend that you use an intake-air flow meter that meets the specifications in Table 1 of § 1065.205. This may

include a laminar flow element, an ultrasonic flow meter, a subsonic venturi, a thermal-mass meter, an averaging Pitot tube, or a hot-wire anemometer. Note that your overall system for measuring intake-air flow must meet the linearity verification in § 1065.307 and the calibration in § 1065.325.

(c) *Flow conditioning*. For any type of intake-air flow meter, condition the flow as needed to prevent wakes, eddies, circulating flows, or flow pulsations from affecting the accuracy or repeatability of the meter. You may accomplish this by using a sufficient length of straight tubing (such as a length equal to at least 10 pipe diameters) or by using specially designed tubing bends, orifice plates or straightening fins to establish a predictable velocity profile upstream of the meter.

[70 FR 40516, July 13, 2005, as amended at 76 FR 57442, Sept. 15, 2011;79 FR 23760, Apr. 28, 2014; 81 FR 74163, Oct. 25, 2016]

EFFECTIVE DATE NOTE: At 86 FR 34536, June 29, 2021, § 1065.225 was amended, effective July 29, 2021.

§ 1065.230 Raw exhaust flow meter.

(a) *Application*. You may use measured raw exhaust flow, as follows:

(1) Use the actual value of calculated raw exhaust in the following cases:

(i) Multiply raw exhaust flow rate with continuously sampled concentrations.

(ii) Multiply total raw exhaust with batch sampled concentrations.

(2) In the following cases, you may use a raw exhaust flow meter signal that does not give the actual value of raw exhaust, as long as it is linearly proportional to the exhaust flow rate's actual calculated value:

(i) For feedback control of a proportional sampling system, such as a partial-flow dilution system.

(ii) For multiplying with continuously sampled gas concentrations, if the same signal is used in a chemical-balance calculation to determine work from brake-specific fuel consumption and fuel consumed.

(b) *Component requirements*. We recommend that you use a raw-exhaust flow meter that meets the specifications in Table 1 of § 1065.205. This may involve using an ultrasonic flow meter, a subsonic venturi, an averaging Pitot tube, a hot-wire anemometer, or other measurement principle. This would generally not involve a laminar flow element or a thermal-mass meter. Note that your overall system for measuring raw exhaust flow must meet the linearity verification in § 1065.307 and the calibration and verifications in § 1065.330. Any raw-exhaust meter must be designed to appropriately compensate for changes in the raw exhaust's thermodynamic, fluid, and compositional states.

(c) *Flow conditioning*. For any type of raw exhaust flow meter, condition the flow as needed to prevent wakes, eddies, circulating flows, or flow pulsations from affecting the accuracy or repeatability of the meter. You may accomplish this by using a sufficient length of straight tubing (such as a length equal to at least 10 pipe diameters) or by using specially designed tubing bends, orifice plates or straightening fins to establish a predictable velocity profile upstream of the meter.

(d) *Exhaust cooling*. You may cool raw exhaust upstream of a raw-exhaust flow meter, as long as you observe all the following provisions:

(1) Do not sample PM downstream of the cooling.

(2) If cooling causes exhaust temperatures above 202 °C to decrease to below 180 °C, do not sample NMHC downstream of the cooling for compression-ignition engines, two-stroke spark-ignition engines, or four-stroke spark-ignition engines at or below 19 kW.

(3) The cooling must not cause aqueous condensation.

[70 FR 40516, July 13, 2005, as amended at 79 FR 23761, Apr. 28, 2014]

§ 1065.240 Dilution air and diluted exhaust flow meters.

(a) *Application*. Use a diluted exhaust flow meter to determine instantaneous diluted exhaust flow rates or total diluted exhaust flow over a test interval. You may use the difference between a diluted exhaust flow meter and a dilution air meter to calculate raw exhaust flow rates or total raw exhaust flow over a test interval.

(b) *Component requirements*. We recommend that you use a diluted exhaust

flow meter that meets the specifications in Table 1 of § 1065.205. Note that your overall system for measuring diluted exhaust flow must meet the linearity verification in § 1065.307 and the calibration and verifications in § 1065.340 and § 1065.341. You may use the following meters:

(1) For constant-volume sampling (CVS) of the total flow of diluted exhaust, you may use a critical-flow venturi (CFV) or multiple critical-flow venturis arranged in parallel, a positive-displacement pump (PDP), a subsonic venturi (SSV), or an ultrasonic flow meter (UFM). Combined with an upstream heat exchanger, either a CFV or a PDP will also function as a passive flow controller in a CVS system. However, you may also combine any flow meter with any active flow control system to maintain proportional sampling of exhaust constituents. You may control the total flow of diluted exhaust, or one or more sample flows, or a combination of these flow controls to maintain proportional sampling.

(2) For any other dilution system, you may use a laminar flow element, an ultrasonic flow meter, a subsonic venturi, a critical-flow venturi or multiple critical-flow venturis arranged in parallel, a positive-displacement meter, a thermal-mass meter, an averaging Pitot tube, or a hot-wire anemometer.

(c) *Flow conditioning*. For any type of diluted exhaust flow meter, condition the flow as needed to prevent wakes, eddies, circulating flows, or flow pulsations from affecting the accuracy or repeatability of the meter. For some meters, you may accomplish this by using a sufficient length of straight tubing (such as a length equal to at least 10 pipe diameters) or by using specially designed tubing bends, orifice plates or straightening fins to establish a predictable velocity profile upstream of the meter.

(d) *Exhaust cooling*. You may cool diluted exhaust upstream of a dilute-exhaust flow meter, as long as you observe all the following provisions:

(1) Do not sample PM downstream of the cooling.

(2) If cooling causes exhaust temperatures above 202 °C to decrease to below 180 °C, do not sample NMHC downstream of the cooling for compression-ignition engines, two-stroke spark-ignition engines, or four-stroke spark-ignition engines at or below 19 kW.

(3) The cooling must not cause aqueous condensation as described in § 1065.140(c)(6).

[70 FR 40516, July 13, 2005, as amended at 75 FR 23035, Apr. 30, 2010; 79 FR 23761, Apr. 28, 2014]

§ 1065.245 Sample flow meter for batch sampling.

(a) *Application*. Use a sample flow meter to determine sample flow rates or total flow sampled into a batch sampling system over a test interval. You may use the difference between a diluted exhaust sample flow meter and a dilution air meter to calculate raw exhaust flow rates or total raw exhaust flow over a test interval.

(b) *Component requirements*. We recommend that you use a sample flow meter that meets the specifications in Table 1 of § 1065.205. This may involve a laminar flow element, an ultrasonic flow meter, a subsonic venturi, a critical-flow venturi or multiple critical-flow venturis arranged in parallel, a positive-displacement meter, a thermal-mass meter, an averaging Pitot tube, or a hot-wire anemometer. Note that your overall system for measuring sample flow must meet the linearity verification in § 1065.307. For the special case where CFVs are used for both the diluted exhaust and sample-flow measurements and their upstream pressures and temperatures remain similar during testing, you do not have to quantify the flow rate of the sample-flow CFV. In this special case, the sample-flow CFV inherently flow-weights the batch sample relative to the diluted exhaust CFV.

(c) *Flow conditioning*. For any type of sample flow meter, condition the flow as needed to prevent wakes, eddies, circulating flows, or flow pulsations from affecting the accuracy or repeatability of the meter. For some meters, you may accomplish this by using a sufficient length of straight tubing (such as a length equal to at least 10 pipe diameters) or by using specially designed tubing bends, orifice plates or straightening fins to establish a predictable velocity profile upstream of the meter.

§ 1065.247 Diesel exhaust fluid flow rate.

(a) *Application*. Determine diesel exhaust fluid flow rate over a test interval for batch or continuous emission sampling using one of the three methods described in this section.

(b) *ECM*. Use the ECM signal directly to determine diesel exhaust fluid flow rate. You may combine this with a gravimetric scale if that improves measurement quality. Prior to testing, you may characterize the ECM signal using a laboratory measurement and adjust the ECM signal, consistent with good engineering judgment.

(c) *Flow meter*. Measure diesel exhaust fluid flow rate with a flow meter. We recommend that the flow meter that meets the specifications in Table 1 of § 1065.205. Note that your overall system for measuring diesel exhaust fluid flow must meet the linearity verification in § 1065.307. Measure using the following procedure:

(1) Condition the flow of diesel exhaust fluid as needed to prevent wakes, eddies, circulating flows, or flow pulsations from affecting the accuracy or repeatability of the meter. You may accomplish this by using a sufficient length of straight tubing (such as a length equal to at least 10 pipe diameters) or by using specially designed tubing bends, straightening fins, or pneumatic pulsation dampeners to establish a steady and predictable velocity profile upstream of the meter. Condition the flow as needed to prevent any gas bubbles in the fluid from affecting the flow meter.

(2) Account for any fluid that bypasses the engine or returns from the engine to the fluid storage tank.

(d) *Gravimetric scale*. Use a gravimetric scale to determine the mass of diesel exhaust fluid the engine uses over a discrete-mode test interval and divide by the time of the test interval.

[81 FR 74163, Oct. 25, 2016]

EFFECTIVE DATE NOTE: At 86 FR 34536, June 29, 2021, § 1065.247 was revised, effective July 29, 2021.

§ 1065.248 Gas divider.

(a) *Application*. You may use a gas divider to blend calibration gases.

(b) *Component requirements*. Use a gas divider that blends gases to the specifications of § 1065.750 and to the flow-weighted concentrations expected during testing. You may use critical-flow gas dividers, capillary-tube gas dividers, or thermal-mass-meter gas dividers. Note that your overall gas-divider system must meet the linearity verification in § 1065.307.

CO AND CO_2 MEASUREMENTS

§ 1065.250 Nondispersive infrared analyzer.

(a) *Application*. Use a nondispersive infrared (NDIR) analyzer to measure CO and CO_2 concentrations in raw or diluted exhaust for either batch or continuous sampling.

(b) *Component requirements*. We recommend that you use an NDIR analyzer that meets the specifications in Table 1 of § 1065.205. Note that your NDIR-based system must meet the calibration and verifications in §§ 1065.350 and 1065.355 and it must also meet the linearity verification in § 1065.307.

[76 FR 57442, Sept. 15, 2011, as amended at 79 FR 23761, Apr. 28, 2014]

HYDROCARBON MEASUREMENTS

§ 1065.260 Flame-ionization detector.

(a) *Application*. Use a flame-ionization detector (FID) analyzer to measure hydrocarbon concentrations in raw or diluted exhaust for either batch or continuous sampling. Determine hydrocarbon concentrations on a carbon number basis of one, C_1. For measuring THC or THCE you must use a FID analyzer. For measuring CH_4 you must meet the requirements of paragraph (f) of this section. See subpart I of this part for special provisions that apply to measuring hydrocarbons when testing with oxygenated fuels.

(b) *Component requirements*. We recommend that you use a FID analyzer that meets the specifications in Table 1 of § 1065.205. Note that your FID-based system for measuring THC, THCE, or CH_4 must meet all the verifications for hydrocarbon measurement in subpart D of this part, and it must also meet the linearity verification in § 1065.307.

(c) *Heated FID analyzers*. For measuring THC or THCE from compression-ignition engines, two-stroke spark-ignition engines, and four-stroke spark-ignition engines at or below 19 kW, you must use heated FID analyzers that maintain all surfaces that are exposed to emissions at a temperature of (191 ±11) °C.

(d) *FID fuel and burner air*. Use FID fuel and burner air that meet the specifications of § 1065.750. Do not allow the FID fuel and burner air to mix before entering the FID analyzer to ensure that the FID analyzer operates with a diffusion flame and not a premixed flame.

(e) *NMHC and NMOG*. For demonstrating compliance with NMHC standards, you may either measure THC or determine NMHC mass as described in § 1065.660(b)(1), or you may measure THC and CH_4 and determine NMHC as described in § 1065.660(b)(2) or (3). For gaseous-fueled engines, you may also use the additive method in § 1065.660(b)(4). See 40 CFR 1066.635 for methods to demonstrate compliance with NMOG standards for vehicle testing.

(f) *NMNEHC*. For demonstrating compliance with NMNEHC standards, you may either measure NMHC or determine NMNEHC mass as described in § 1065.660(c)(1), you may measure THC, CH_4, and C_2H_6 and determine NMNEHC as described in § 1065.660(c)(2), or you may use the additive method in § 1065.660(c)(3).

(g) *CH_4*. For reporting CH_4 or for demonstrating compliance with CH_4 standards, you may use a FID analyzer with a nonmethane cutter as described in § 1065.265 or you may use a GC–FID as described in § 1065.267. Determine CH_4 as described in § 1065.660(d).

[76 FR 57442, Sept. 15, 2011, as amended at 79 FR 23761, Apr. 28, 2014; 81 FR 74163, Oct. 25, 2016]

EFFECTIVE DATE NOTE: At 86 FR 34536, June 29, 2021, § 1065.260 was amended, effective July 29, 2021.

§ 1065.265 Nonmethane cutter.

(a) *Application*. You may use a nonmethane cutter to measure CH_4 with a FID analyzer. A nonmethane cutter oxidizes all nonmethane hydrocarbons to CO_2 and H_2O. You may use a nonmethane cutter for raw or diluted exhaust for batch or continuous sampling.

(b) *System performance*. Determine nonmethane-cutter performance as described in § 1065.365 and use the results to calculate CH_4 or NMHC emissions in § 1065.660.

(c) *Configuration*. Configure the nonmethane cutter with a bypass line if it is needed for the verification described in § 1065.365.

(d) *Optimization*. You may optimize a nonmethane cutter to maximize the penetration of CH_4 and the oxidation of all other hydrocarbons. You may humidify a sample and you may dilute a sample with purified air or oxygen (O_2) upstream of the nonmethane cutter to optimize its performance. You must account for any sample humidification and dilution in emission calculations.

[70 FR 40516, July 13, 2005, as amended at 73 FR 37300, June 30, 2008; 76 FR 57442, Sept. 15, 2011]

§ 1065.266 Fourier transform infrared analyzer.

(a) *Application*. For engines that run only on natural gas, you may use a Fourier transform infrared (FTIR) analyzer to measure nonmethane hydrocarbon (NMHC) and nonmethane-nonethane hydrocarbon (NMNEHC) for continuous sampling. You may use an FTIR analyzer with any gaseous-fueled engine, including dual-fuel engines, to measure CH_4 and C_2H_6, for either batch or continuous sampling (for subtraction from THC).

(b) *Component requirements*. We recommend that you use an FTIR analyzer that meets the specifications in Table 1 of § 1065.205. Note that your FTIR-based system must meet the linearity verification in § 1065.307. Use appropriate analytical procedures for interpretation of infrared spectra. For example, EPA Test Method 320 (see *https://www3.epa.gov/ttn/emc/promgate/m-320.pdf*) and ASTM D6348 (incorporated by reference in § 1065.1010) are considered valid methods for spectral interpretation. You must use heated FTIR analyzers that maintain all surfaces that are exposed to emissions at a temperature of (110 to 202) °C.

(c) *Hydrocarbon species for NMHC and NMNEHC additive determination.* To determine NMNEHC, measure ethene, ethyne, propane, propene, butane, formaldehyde, acetaldehyde, formic acid, and methanol. To determine NMHC, measure ethane in addition to those same hydrocarbon species. Determine NMHC and NMNEHC as described in § 1065.660(b)(4) and § 1065.660(c)(3).

(d) *NMHC and NMNEHC* CH_4 and C_2H_6 determination from subtraction of CH_4 and C_2H_6 from THC. Determine CH_4 as described in § 1065.660(d)(2) and C_2H_6 as described § 1065.660(e). Determine NMHC from subtraction of CH_4 from THC as described in § 1065.660(b)(3) and NMNEHC from subtraction of CH_4 and C_2H_6 as described § 1065.660(c)(2). Determine CH_4 as described in § 1065.660(d)(2) and C_2H_6 as described § 1065.660(e).

(e) *Interference verification.* Perform interference verification for FTIR analyzers using the procedures of § 1065.366. Certain interference gases can interfere with FTIR analyzers by causing a response similar to the hydrocarbon species of interest. When running the interference verification for these analyzers, use interference gases as follows:

(1) The interference gases for CH_4 are CO_2, H_2O, and C_2H_6.

(2) The interference gases for C_2H_6 are CO_2, H_2O, and CH_4.

(3) The interference gases for other measured hydrocarbon species are CO_2, H_2O, CH_4, and C_2H_6.

[81 FR 74163, Oct. 25, 2016]

EFFECTIVE DATE NOTE: At 86 FR 34536, June 29, 2021, § 1065.266 was amended, effective July 29, 2021.

§ 1065.267 Gas chromatograph with a flame ionization detector.

(a) *Application.* You may use a gas chromatograph with a flame ionization detector (GC–FID) to measure CH_4 and C_2H_6 concentrations of diluted exhaust for batch sampling. While you may also use a nonmethane cutter to measure CH_4, as described in § 1065.265, use a reference procedure based on a gas chromatograph for comparison with any proposed alternate measurement procedure under § 1065.10.

(b) *Component requirements.* We recommend that you use a GC–FID that meets the specifications in Table 1 of § 1065.205 and that the measurement be done according to SAE J1151 (incorporated by reference in § 1065.1010). The GC–FID must meet the linearity verification in § 1065.307.

[76 FR 57442, Sept. 15, 2011, as amended at 79 FR 23761, Apr. 28, 2014; 81 FR 74163, Oct. 25, 2016]

§ 1065.269 Photoacoustic analyzer for ethanol and methanol.

(a) *Application.* You may use a photoacoustic analyzer to measure ethanol and/or methanol concentrations in diluted exhaust for batch sampling.

(b) *Component requirements.* We recommend that you use a photoacoustic analyzer that meets the specifications in Table 1 of § 1065.205. Note that your photoacoustic system must meet the verification in § 1065.369 and it must also meet the linearity verification in § 1065.307. Use an optical wheel configuration that gives analytical priority to measurement of the least stable components in the sample. Select a sample integration time of at least 5 seconds. Take into account sample chamber and sample line volumes when determining flush times for your instrument.

[79 FR 23761, Apr. 28, 2014]

NO_X AND N_2O MEASUREMENTS

§ 1065.270 Chemiluminescent detector.

(a) *Application.* You may use a chemiluminescent detector (CLD) to measure NO_X concentration in raw or diluted exhaust for batch or continuous sampling. We generally accept a CLD for NO_X measurement, even though it measures only NO and NO_2, when coupled with an NO_2-to-NO converter, since conventional engines and aftertreatment systems do not emit significant amounts of NO_X species other than NO and NO_2. Measure other NO_X species if required by the standard-setting part. While you may also use other instruments to measure NO_X, as described in § 1065.272, use a reference procedure based on a chemiluminescent detector for comparison with any proposed alternate measurement procedure under § 1065.10.

(b) *Component requirements.* We recommend that you use a CLD that meets the specifications in Table 1 of § 1065.205. Note that your CLD-based

system must meet the quench verification in § 1065.370 and it must also meet the linearity verification in § 1065.307. You may use a heated or unheated CLD, and you may use a CLD that operates at atmospheric pressure or under a vacuum.

(c) *NO_2-to-NO converter*. Place upstream of the CLD an internal or external NO_2-to-NO converter that meets the verification in § 1065.378. Configure the converter with a bypass line if it is needed to facilitate this verification.

(d) *Humidity effects*. You must maintain all CLD temperatures to prevent aqueous condensation. If you remove humidity from a sample upstream of a CLD, use one of the following configurations:

(1) Connect a CLD downstream of any dryer or chiller that is downstream of an NO_2-to-NO converter that meets the verification in § 1065.378.

(2) Connect a CLD downstream of any dryer or thermal chiller that meets the verification in § 1065.376.

(e) *Response time*. You may use a heated CLD to improve CLD response time.

[70 FR 40516, July 13, 2005, as amended at 73 FR 37300, June 30, 2008; 76 FR 57442, Sept. 15, 2011; 79 FR 23761, Apr. 28, 2014]

§ 1065.272 Nondispersive ultraviolet analyzer.

(a) *Application*. You may use a nondispersive ultraviolet (NDUV) analyzer to measure NO_X concentration in raw or diluted exhaust for batch or continuous sampling. We generally accept an NDUV for NO_X measurement, even though it measures only NO and NO_2, since conventional engines and aftertreatment systems do not emit significant amounts of other NO_X species. Measure other NO_X species if required by the standard-setting part. Note that good engineering judgment may preclude you from using an NDUV analyzer if sampled exhaust from test engines contains oil (or other contaminants) in sufficiently high concentrations to interfere with proper operation.

(b) *Component requirements*. We recommend that you use an NDUV analyzer that meets the specifications in Table 1 of § 1065.205. Note that your NDUV-based system must meet the verifications in § 1065.372 and it must also meet the linearity verification in § 1065.307.

(c) *NO_2-to-NO converter*. If your NDUV analyzer measures only NO, place upstream of the NDUV analyzer an internal or external NO_2-to-NO converter that meets the verification in § 1065.378. Configure the converter with a bypass to facilitate this verification.

(d) *Humidity effects*. You must maintain NDUV temperature to prevent aqueous condensation, unless you use one of the following configurations:

(1) Connect an NDUV downstream of any dryer or chiller that is downstream of an NO_2-to-NO converter that meets the verification in § 1065.378.

(2) Connect an NDUV downstream of any dryer or thermal chiller that meets the verification in § 1065.376.

[70 FR 40516, July 13, 2005, as amended at 73 FR 59323, Oct. 8, 2008; 76 FR 57442, Sept. 15, 2011; 79 FR 23761, Apr. 28, 2014]

§ 1065.275 N_2O measurement devices.

(a) *General component requirements*. We recommend that you use an analyzer that meets the specifications in Table 1 of § 1065.205. Note that your system must meet the linearity verification in § 1065.307.

(b) *Instrument types*. You may use any of the following analyzers to measure N_2O:

(1) Nondispersive infrared (NDIR) analyzer.

(2) Fourier transform infrared (FTIR) analyzer. Use appropriate analytical procedures for interpretation of infrared spectra. For example, EPA Test Method 320 (see *https://www3.epa.gov/ttn/emc/promgate/m-320.pdf*) and ASTM D6348 (incorporated by reference in § 1065.1010) are considered valid methods for spectral interpretation.

(3) Laser infrared analyzer. Examples of laser infrared analyzers are pulsed-mode high-resolution narrow band mid-infrared analyzers, and modulated continuous wave high-resolution narrow band mid-infrared analyzers.

(4) Photoacoustic analyzer. Use an optical wheel configuration that gives analytical priority to measurement of the least stable components in the sample. Select a sample integration time of at least 5 seconds. Take into account sample chamber and sample

line volumes when determining flush times for your instrument.

(5) Gas chromatograph analyzer. You may use a gas chromatograph with an electron-capture detector (GC–ECD) to measure N_2O concentrations of diluted exhaust for batch sampling.

(i) You may use a packed or porous layer open tubular (PLOT) column phase of suitable polarity and length to achieve adequate resolution of the N_2O peak for analysis. Examples of acceptable columns are a PLOT column consisting of bonded polystyrene-divinylbenzene or a Porapack Q packed column. Take the column temperature profile and carrier gas selection into consideration when setting up your method to achieve adequate N_2O peak resolution.

(ii) Use good engineering judgment to zero your instrument and correct for drift. You do not need to follow the specific procedures in §§1065.530 and 1065.550(b) that would otherwise apply. For example, you may perform a span gas measurement before and after sample analysis without zeroing and use the average area counts of the pre-span and post-span measurements to generate a response factor (area counts/span gas concentration), which you then multiply by the area counts from your sample to generate the sample concentration.

(c) *Interference verification.* Perform interference verification for NDIR, FTIR, laser infrared analyzers, and photoacoustic analyzers using the procedures of §1065.375. Interference verification is not required for GC–ECD. Certain interference gases can positively interfere with NDIR, FTIR, and photoacoustic analyzers by causing a response similar to N_2O. When running the interference verification for these analyzers, use interference gases as follows:

(1) The interference gases for NDIR analyzers are CO, CO_2, H_2O, CH_4, and SO_2. Note that interference species, with the exception of H_2O, are dependent on the N_2O infrared absorption band chosen by the instrument manufacturer. For each analyzer determine the N_2O infrared absorption band. For each N_2O infrared absorption band, use good engineering judgment to determine which interference gases to use in the verification.

(2) Use good engineering judgment to determine interference gases for FTIR, and laser infrared analyzers. Note that interference species, with the exception of H_2O, are dependent on the N_2O infrared absorption band chosen by the instrument manufacturer. For each analyzer determine the N_2O infrared absorption band. For each N_2O infrared absorption band, use good engineering judgment to determine interference gases to use in the verification.

(3) The interference gases for photoacoustic analyzers are CO, CO_2, and H_2O.

[74 FR 56512, Oct. 30, 2009, as amended at 76 FR 57443, Sept. 15, 2011; 78 FR 36398, June 17, 2013;79 FR 23761, Apr. 28, 2014; 81 FR 74163, Oct. 25, 2016]

EFFECTIVE DATE NOTE: At 86 FR 34536, June 29, 2021, §1065.275 was amended, effective July 29, 2021.

O_2 MEASUREMENTS

§1065.280 Paramagnetic and magnetopneumatic O_2 detection analyzers.

(a) *Application.* You may use a paramagnetic detection (PMD) or magnetopneumatic detection (MPD) analyzer to measure O_2 concentration in raw or diluted exhaust for batch or continuous sampling. You may use O_2 measurements with intake air or fuel flow measurements to calculate exhaust flow rate according to §1065.650.

(b) *Component requirements.* We recommend that you use a PMD or MPD analyzer that meets the specifications in Table 1 of §1065.205. Note that it must meet the linearity verification in §1065.307.

[73 FR 37300, June 30, 2008, as amended at 76 FR 57443, Sept. 15, 2011;79 FR 23762, Apr. 28, 2014]

EFFECTIVE DATE NOTE: At 86 FR 34536, June 29, 2021, §1065.280 was amended, effective July 29, 2021.

AIR-TO-FUEL RATIO MEASUREMENTS

§1065.284 Zirconia (ZrO_2) analyzer.

(a) *Application.* You may use a zirconia (ZrO_2) analyzer to measure air-to-fuel ratio in raw exhaust for continuous sampling. You may use O_2

measurements with intake air or fuel flow measurements to calculate exhaust flow rate according to § 1065.650.

(b) *Component requirements.* We recommend that you use a ZrO_2 analyzer that meets the specifications in Table 1 of § 1065.205. Note that your ZrO_2-based system must meet the linearity verification in § 1065.307.

[70 FR 40516, July 13, 2005, as amended at 76 FR 57443, Sept. 15, 2011; 79 FR 23762, Apr. 28, 2014]

PM MEASUREMENTS

§ 1065.290 PM gravimetric balance.

(a) *Application.* Use a balance to weigh net PM on a sample medium for laboratory testing.

(b) *Component requirements.* We recommend that you use a balance that meets the specifications in Table 1 of § 1065.205. Note that your balance-based system must meet the linearity verification in § 1065.307. If the balance uses internal calibration weights for routine spanning and the weights do not meet the specifications in § 1065.790, the weights must be verified independently with external calibration weights meeting the requirements of § 1065.790. While you may also use an inertial balance to measure PM, as described in § 1065.295, use a reference procedure based on a gravimetric balance for comparison with any proposed alternate measurement procedure under § 1065.10.

(c) *Pan design.* We recommend that you use a balance pan designed to minimize corner loading of the balance, as follows:

(1) Use a pan that centers the PM sample media (such as a filter) on the weighing pan. For example, use a pan in the shape of a cross that has upswept tips that center the PM sample media on the pan.

(2) Use a pan that positions the PM sample as low as possible.

(d) *Balance configuration.* Configure the balance for optimum settling time and stability at your location.

[73 FR 37300, June 30, 2008, as amended at 75 FR 68462, Nov. 8, 2010]

§ 1065.295 PM inertial balance for field-testing analysis.

(a) *Application.* You may use an inertial balance to quantify net PM on a sample medium for field testing.

(b) *Component requirements.* We recommend that you use a balance that meets the specifications in Table 1 of § 1065.205. Note that your balance-based system must meet the linearity verification in § 1065.307. If the balance uses an internal calibration process for routine spanning and linearity verifications, the process must be NIST-traceable.

(c) *Loss correction.* You may use PM loss corrections to account for PM loss in the inertial balance, including the sample handling system.

(d) *Deposition.* You may use electrostatic deposition to collect PM as long as its collection efficiency is at least 95%.

[73 FR 59259, Oct. 8, 2008, as amended at 75 FR 68462, Nov. 8, 2010; 76 FR 57443, Sept. 15, 2011; 79 FR 23762, Apr. 28, 2014]

Subpart D—Calibrations and Verifications

§ 1065.301 Overview and general provisions.

(a) This subpart describes required and recommended calibrations and verifications of measurement systems. See subpart C of this part for specifications that apply to individual instruments.

(b) You must generally use complete measurement systems when performing calibrations or verifications in this subpart. For example, this would generally involve evaluating instruments based on values recorded with the complete system you use for recording test data, including analog-to-digital converters. For some calibrations and verifications, we may specify that you disconnect part of the measurement system to introduce a simulated signal.

(c) If we do not specify a calibration or verification for a portion of a measurement system, calibrate that portion of your system and verify its performance at a frequency consistent with

any recommendations from the measurement-system manufacturer, consistent with good engineering judgment.

(d) Use NIST-traceable standards to the tolerances we specify for calibrations and verifications. Where we specify the need to use NIST-traceable standards, you may alternatively ask for our approval to use international standards that are not NIST-traceable.

§ 1065.303 Summary of required calibration and verifications.

The following table summarizes the required and recommended calibrations and verifications described in this subpart and indicates when these have to be performed:

TABLE 1 OF § 1065.303—SUMMARY OF REQUIRED CALIBRATION AND VERIFICATIONS

Type of calibration or verification	Minimum frequency [1]
§ 1065.305: Accuracy, repeatability and noise	Accuracy: Not required, but recommended for initial installation. Repeatability: Not required, but recommended for initial installation. Noise: Not required, but recommended for initial installation.
§ 1065.307: Linearity verification	Speed: Upon initial installation, within 370 days before testing and after major maintenance. Torque: Upon initial installation, within 370 days before testing and after major maintenance. Electrical power, current, and voltage: Upon initial installation, within 370 days before testing and after major maintenance.[2] Fuel flow rate: Upon initial installation, within 370 days before testing, and after major maintenance. DEF flow: Upon initial installation, within 370 days before testing, and after major maintenance. Intake-air, dilution air, diluted exhaust, and batch sampler flow rates: Upon initial installation, within 370 days before testing and after major maintenance, unless flow is verified by propane check or by carbon or oxygen balance. Raw exhaust flow rate: Upon initial installation, within 185 days before testing and after major maintenance, unless flow is verified by propane check or by carbon or oxygen balance. Gas dividers: Upon initial installation, within 370 days before testing, and after major maintenance. Gas analyzers (unless otherwise noted): Upon initial installation, within 35 days before testing and after major maintenance. FTIR and photoacoustic analyzers: Upon initial installation, within 370 days before testing and after major maintenance. GC–ECD: Upon initial installation and after major maintenance. PM balance: Upon initial installation, within 370 days before testing and after major maintenance. Pressure, temperature, and dewpoint: Upon initial installation, within 370 days before testing and after major maintenance.
§ 1065.308: Continuous gas analyzer system response and updating-recording verification—for gas analyzers not continuously compensated for other gas species.	Upon initial installation or after system modification that would affect response.
§ 1065.309: Continuous gas analyzer system-response and updating-recording verification—for gas analyzers continuously compensated for other gas species.	Upon initial installation or after system modification that would affect response.
§ 1065.310: Torque	Upon initial installation and after major maintenance.
§ 1065.315: Pressure, temperature, dewpoint	Upon initial installation and after major maintenance.
§ 1065.320: Fuel flow	Upon initial installation and after major maintenance.
§ 1065.325: Intake flow	Upon initial installation and after major maintenance.
§ 1065.330: Exhaust flow	Upon initial installation and after major maintenance.
§ 1065.340: Diluted exhaust flow (CVS)	Upon initial installation and after major maintenance.
§ 1065.341: CVS and batch sampler verification [3].	Upon initial installation, within 35 days before testing, and after major maintenance.
§ 1065.342 Sample dryer verification	For thermal chillers: Upon installation and after major maintenance. For osmotic membranes; Upon installation, within 35 days of testing, and after major maintenance.
§ 1065.345: Vacuum leak	For laboratory testing: Upon initial installation of the sampling system, within 8 hours before the start of the first test interval of each duty-cycle sequence, and after maintenance such as pre-filter changes. For field testing: After each installation of the sampling system on the vehicle, prior to the start of the field test, and after maintenance such as pre-filter changes.
§ 1065.350: CO_2 NDIR H_2O interference	Upon initial installation and after major maintenance.
§ 1065.355: CO NDIR CO_2 and H_2O interference.	Upon initial installation and after major maintenance.

TABLE 1 OF § 1065.303—SUMMARY OF REQUIRED CALIBRATION AND VERIFICATIONS—Continued

Type of calibration or verification	Minimum frequency [1]
§ 1065.360: FID calibration THC FID optimization, and THC FID verification.	Calibrate all FID analyzers: Upon initial installation and after major maintenance. Optimize and determine CH_4 response for THC FID analyzers: Upon initial installation and after major maintenance. Verify CH_4 response for THC FID analyzers: Upon initial installation, within 185 days before testing, and after major maintenance. Verify C_2H_6 response for THC FID analyzers if used for NMNEHC determination: Upon initial installation, within 185 days before testing, and after major maintenance.
§ 1065.362: Raw exhaust FID O_2 interference ..	For all FID analyzers: Upon initial installation, and after major maintenance. For THC FID analyzers: Upon initial installation, after major maintenance, and after FID optimization according to § 1065.360.
§ 1065.365: Nonmethane cutter penetration	Upon initial installation, within 185 days before testing, and after major maintenance.
§ 1065.366: Interference verification for FTIR analyzers.	Upon initial installation and after major maintenance.
§ 1065.369: H_2O, CO, and CO_2 interference verification for ethanol photoacoustic analyzers.	Upon initial installation and after major maintenance.
§ 1065.370: CLD CO_2 and H_2O quench	Upon initial installation and after major maintenance.
§ 1065.372: NDUV HC and H_2O interference ...	Upon initial installation and after major maintenance.
§ 1065.375: N_2O analyzer interference	Upon initial installation and after major maintenance.
§ 1065.376: Chiller NO_2 penetration	Upon initial installation and after major maintenance.
§ 1065.378: NO_2-to-NO converter conversion ...	Upon initial installation, within 35 days before testing, and after major maintenance.
§ 1065.390: PM balance and weighing	Independent verification: Upon initial installation, within 370 days before testing, and after major maintenance. Zero, span, and reference sample verifications: Within 12 hours of weighing, and after major maintenance.
§ 1065.395: Inertial PM balance and weighing ..	Independent verification: Upon initial installation, within 370 days before testing, and after major maintenance. Other verifications: Upon initial installation and after major maintenance.

[1] Perform calibrations and verifications more frequently than we specify, according to measurement system manufacturer instructions and good engineering judgment.
[2] Perform linearity verification either for electrical power or for current and voltage.
[3] The CVS verification described in § 1065.341 is not required for systems that agree within ±2% based on a chemical balance of carbon or oxygen of the intake air, fuel, and diluted exhaust.

[81 FR 74164, Oct. 25, 2016]

EFFECTIVE DATE NOTE: At 86 FR 34536, June 29, 2021, § 1065.303 was revised, effective July 29, 2021.

§ 1065.305 Verifications for accuracy, repeatability, and noise.

(a) This section describes how to determine the accuracy, repeatability, and noise of an instrument. Table 1 of § 1065.205 specifies recommended values for individual instruments.

(b) We do not require you to verify instrument accuracy, repeatability, or noise.

However, it may be useful to consider these verifications to define a specification for a new instrument, to verify the performance of a new instrument upon delivery, or to troubleshoot an existing instrument.

(c) In this section we use the letter ''y'' to denote a generic measured quantity, the superscript over-bar to denote an arithmetic mean (such as $\bar{y}$), and the subscript ''$_{ref}$'' to denote the reference quantity being measured.

(d) Conduct these verifications as follows:

(1) Prepare an instrument so it operates at its specified temperatures, pressures, and flows. Perform any instrument linearization or calibration procedures prescribed by the instrument manufacturer.

(2) Zero the instrument as you would before an emission test by introducing a zero signal. Depending on the instrument, this may be a zero-concentration gas, a reference signal, a set of reference thermodynamic conditions, or some combination of these. For gas analyzers, use a zero gas that meets the specifications of § 1065.750.

(3) Span the instrument as you would before an emission test by introducing a span signal. Depending on the instrument, this may be a span-concentration gas, a reference signal, a set of reference thermodynamic conditions, or

some combination of these. For gas analyzers, use a span gas that meets the specifications of § 1065.750.

(4) Use the instrument to quantify a NIST-traceable reference quantity, y_{ref}. For gas analyzers the reference gas must meet the specifications of § 1065.750. Select a reference quantity near the mean value expected during testing. For all gas analyzers, use a quantity near the flow-weighted mean concentration expected at the standard or expected during testing, whichever is greater. For noise verification, use the same zero gas from paragraph (d)(2) of this section as the reference quantity. In all cases, allow time for the instrument to stabilize while it measures the reference quantity. Stabilization time may include time to purge an instrument and time to account for its response.

(5) Sample and record values for 30 seconds (you may select a longer sampling period if the recording update frequency is less than 0.5 Hz), record the arithmetic mean, $\bar{y}_i$ and record the standard deviation, σ_i of the recorded values. Refer to § 1065.602 for an example of calculating arithmetic mean and standard deviation.

(6) Also, if the reference quantity is not absolutely constant, which might be the case with a reference flow, sample and record values of y_{refi} for 30 seconds and record the arithmetic mean of the values, $\bar{y}_{ref}$. Refer to § 1065.602 for an example of calculating arithmetic mean.

(7) Subtract the reference value, y_{ref} (or $\bar{y}_{refi}$), from the arithmetic mean, $\bar{y}_i$. Record this value as the error, ε_i.

(8) Repeat the steps specified in paragraphs (d)(2) through (7) of this section until you have ten arithmetic means ($\bar{y}_1$, $\bar{y}_2$, $\bar{y}_i$, ...$\bar{y}_{10}$), ten standard deviations, (σ_1, σ_2, σ_i,...σ_{10}), and ten errors (ε_1, ε_2, ε_i,...ε_{10}).

(9) Use the following values to quantify your measurements:

(i) *Accuracy*. Instrument accuracy is the absolute difference between the reference quantity, y_{ref} (or $\bar{y}_{ref}$), and the arithmetic mean of the ten $\bar{y}_i$, $\bar{y}$ values. Refer to the example of an accuracy calculation in § 1065.602. We recommend that instrument accuracy be within the specifications in Table 1 of § 1065.205.

(ii) *Repeatability*. Repeatability is two times the standard deviation of the ten errors (that is, repeatability = $2 \cdot \sigma\varepsilon$). Refer to the example of a standard-deviation calculation in § 1065.602. We recommend that instrument repeatability be within the specifications in Table 1 of § 1065.205.

(iii) *Noise*. Noise is two times the root-mean-square of the ten standard deviations (that is, noise = $2 \cdot rms_{\sigma}$) when the reference signal is a zero-quantity signal. Refer to the example of a root-mean-square calculation in § 1065.602. We recommend that instrument noise be within the specifications in Table 1 of § 1065.205.

(10) You may use a measurement instrument that does not meet the accuracy, repeatability, or noise specifications in Table 1 of § 1065.205, as long as you meet the following criteria:

(i) Your measurement systems meet all the other required calibration, verification, and validation specifications that apply as specified in the regulations.

(ii) The measurement deficiency does not adversely affect your ability to demonstrate compliance with the applicable standards.

[70 FR 40516, July 13, 2005, as amended at 73 FR 37301, June 30, 2008; 75 FR 23037, Apr. 30, 2010; 79 FR 23763, Apr. 28, 2014]

§ 1065.307 Linearity verification.

(a) *Scope and frequency*. Perform linearity verification on each measurement system listed in Table 1 of this section at least as frequently as indicated in Table 1 of § 1065.303, consistent with measurement system manufacturer's recommendations and good engineering judgment. The intent of linearity verification is to determine that a measurement system responds accurately and proportionally over the measurement range of interest. Linearity verification generally consists of introducing a series of at least 10 reference values to a measurement system. The measurement system quantifies each reference value. The measured values are then collectively compared to the reference values by using a least-squares linear regression and the linearity criteria specified in Table 1 of this section.

(b) *Performance requirements.* If a measurement system does not meet the applicable linearity criteria referenced in Table 1 of this section, correct the deficiency by re-calibrating, servicing, or replacing components as needed. Repeat the linearity verification after correcting the deficiency to ensure that the measurement system meets the linearity criteria. Before you may use a measurement system that does not meet linearity criteria, you must demonstrate to us that the deficiency does not adversely affect your ability to demonstrate compliance with the applicable standards.

(c) *Procedure.* Use the following linearity verification protocol, or use good engineering judgment to develop a different protocol that satisfies the intent of this section, as described in paragraph (a) of this section:

(1) In this paragraph (c), the letter ''y'' denotes a generic measured quantity, the superscript over-bar denotes an arithmetic mean (such as $\bar{y}$), and the subscript ''$_{ref}$'' denotes the known or reference quantity being measured.

(2) Use good engineering judgment to operate a measurement system at normal operating conditions. This may include any specified adjustment or periodic calibration of the measurement system.

(3) If applicable, zero the instrument as you would before an emission test by introducing a zero signal. Depending on the instrument, this may be a zero-concentration gas, a reference signal, a set of reference thermodynamic conditions, or some combination of these. For gas analyzers, use a zero gas that meets the specifications of §1065.750 and introduce it directly at the analyzer port.

(4) If applicable, span the instrument as you would before an emission test by introducing a span signal. Depending on the instrument, this may be a span-concentration gas, a reference signal, a set of reference thermodynamic conditions, or some combination of these. For gas analyzers, use a span gas that meets the specifications of §1065.750 and introduce it directly at the analyzer port.

(5) If applicable, after spanning the instrument, check zero with the same signal you used in paragraph (c)(3) of this section. Based on the zero reading, use good engineering judgment to determine whether or not to rezero and or re-span the instrument before continuing.

(6) For all measured quantities, use the instrument manufacturer's recommendations and good engineering judgment to select reference values, y_{refi}, that cover a range of values that you expect would prevent extrapolation beyond these values during emission testing. We recommend selecting a zero reference signal as one of the reference values for the linearity verification. For pressure, temperature, dewpoint, power, current, voltage, photoacoustic analyzers, and GC–ECD linearity verifications, we recommend at least three reference values. For all other linearity verifications select at least ten reference values.

(7) Use the instrument manufacturer's recommendations and good engineering judgment to select the order in which you will introduce the series of reference values. For example, you may select the reference values randomly to avoid correlation with previous measurements and to avoid hysteresis; you may select reference values in ascending or descending order to avoid long settling times of reference signals; or you may select values to ascend and then descend to incorporate the effects of any instrument hysteresis into the linearity verification.

(8) Generate reference quantities as described in paragraph (d) of this section. For gas analyzers, use gas concentrations known to be within the specifications of §1065.750 and introduce them directly at the analyzer port.

(9) Introduce a reference signal to the measurement instrument.

(10) Allow time for the instrument to stabilize while it measures the value at the reference condition. Stabilization time may include time to purge an instrument and time to account for its response.

(11) At a recording frequency of at least f Hz, specified in Table 1 of §1065.205, measure the value at the reference condition for 30 seconds (you may select a longer sampling period if

the recording update frequency is less than 0.5 Hz) and record the arithmetic mean of the recorded values, $\bar{y}_i$. Refer to §1065.602 for an example of calculating an arithmetic mean.

(12) Repeat the steps in paragraphs (c)(9) though (11) of this section until measurements are complete at each of the reference conditions.

(13) Use the arithmetic means, $\bar{y}_i$, and reference values, y_{refi}, to calculate least-squares linear regression parameters and statistical values to compare to the minimum performance criteria specified in Table 1 of this section. Use the calculations described in §1065.602. Using good engineering judgment, you may weight the results of individual data pairs (i.e. (y_{refi}, $\bar{y}_i$,)), in the linear regression calculations.

(d) *Reference signals*. This paragraph (d) describes recommended methods for generating reference values for the linearity-verification protocol in paragraph (c) of this section. Use reference values that simulate actual values, or introduce an actual value and measure it with a reference-measurement system. In the latter case, the reference value is the value reported by the reference-measurement system. Reference values and reference-measurement systems must be NIST-traceable. We recommend using calibration reference quantities that are NIST-traceable within 0.5% uncertainty, if not specified elsewhere in this part 1065. Use the following recommended methods to generate reference values or use good engineering judgment to select a different reference:

(1) *Speed*. Run the engine or dynamometer at a series of steady-state speeds and use a strobe, photo tachometer, or laser tachometer to record reference speeds.

(2) *Torque*. Use a series of calibration weights and a calibration lever arm to simulate engine torque. You may instead use the engine or dynamometer itself to generate a nominal torque that is measured by a reference load cell or proving ring in series with the torque-measurement system. In this case, use the reference load cell measurement as the reference value. Refer to §1065.310 for a torque-calibration procedure similar to the linearity verification in this section.

(3) *Electrical power, current, and voltage*. You must perform linearity verification for either electrical power meters, or for current and voltage meters. Perform linearity verifications using a reference meter and controlled sources of current and voltage. We recommend using a complete calibration system that is suitable for the electrical power distribution industry.

(4) *Fuel rate*. Operate the engine at a series of constant fuel-flow rates or recirculate fuel back to a tank through the fuel flow meter at different flow rates. Use a gravimetric reference measurement (such as a scale, balance, or mass comparator) at the inlet to the fuel-measurement system. Use a stopwatch or timer to measure the time intervals over which reference masses of fuel are introduced to the fuel measurement system. The reference fuel mass divided by the time interval is the reference fuel flow rate.

(5) *Flow rates—inlet air, dilution air, diluted exhaust, raw exhaust, or sample flow*. Use a reference flow meter with a blower or pump to simulate flow rates. Use a restrictor, diverter valve, a variable-speed blower or a variable-speed pump to control the range of flow rates. Use the reference meter's response as the reference values.

(i) *Reference flow meters*. Because the flow range requirements for these various flows are large, we allow a variety of reference meters. For example, for diluted exhaust flow for a full-flow dilution system, we recommend a reference subsonic venturi flow meter with a restrictor valve and a blower to simulate flow rates. For inlet air, dilution air, diluted exhaust for partial-flow dilution, raw exhaust, or sample flow, we allow reference meters such as critical flow orifices, critical flow venturis, laminar flow elements, master mass flow standards, or Roots meters. Make sure the reference meter is calibrated and its calibration is NIST-traceable. If you use the difference of two flow measurements to determine a net flow rate, you may use one of the measurements as a reference for the other.

(ii) *Reference flow values*. Because the reference flow is not absolutely constant, sample and record values of $\dot{n}_{\mathrm{refi}}$ for 30 seconds and use the arithmetic

mean of the values, $\dot{n}_{ref}$, as the reference value. Refer to § 1065.602 for an example of calculating arithmetic mean.

(6) *Gas division*. Use one of the two reference signals:

(i) At the outlet of the gas-division system, connect a gas analyzer that meets the linearity verification described in this section and has not been linearized with the gas divider being verified. For example, verify the linearity of an analyzer using a series of reference analytical gases directly from compressed gas cylinders that meet the specifications of § 1065.750. We recommend using a FID analyzer or a PMD or MPD O_2 analyzer because of their inherent linearity. Operate this analyzer consistent with how you would operate it during an emission test. Connect a span gas to the gas-divider inlet. Use the gas-division system to divide the span gas with purified air or nitrogen. Select gas divisions that you typically use. Use a selected gas division as the measured value. Use the analyzer response divided by the span gas concentration as the reference gas-division value. Because the instrument response is not absolutely constant, sample and record values of x_{ref} for 30 seconds and use the arithmetic mean of the values, $\bar{x}_{ref}$, as the reference value. Refer to § 1065.602 for an example of calculating arithmetic mean.

(ii) Using good engineering judgment and the gas divider manufacturer's recommendations, use one or more reference flow meters to measure the flow rates of the gas divider and verify the gas-division value.

(7) *Continuous constituent concentration*. For reference values, use a series of gas cylinders of known gas concentration or use a gas-division system that is known to be linear with a span gas. Gas cylinders, gas-division systems, and span gases that you use for reference values must meet the specifications of § 1065.750.

(8) *Temperature*. You may perform the linearity verification for temperature measurement systems with thermocouples, RTDs, and thermistors by removing the sensor from the system and using a simulator in its place. Use a NIST-traceable simulator that is independently calibrated and, as appropriate, cold-junction-compensated. The simulator uncertainty scaled to absolute temperature must be less than 0.5% of T_{max}. If you use this option, you must use sensors that the supplier states are accurate to better than 0.5% of T_{max} compared with their standard calibration curve.

(9) *Mass*. For linearity verification for gravimetric PM balances, use external calibration weights that meet the requirements in § 1065.790.

(e) *Measurement systems that require linearity verification*. Table 1 of this section indicates measurement systems that require linearity verification, subject to the following provisions:

(1) Perform linearity verification more frequently based on the instrument manufacturer's recommendation or good engineering judgment.

(2) The expression ''x_{min}'' refers to the reference value used during linearity verification that is closest to zero. This is the value used to calculate the first tolerance in Table 1 of this section using the intercept, a_0. Note that this value may be zero, positive, or negative depending on the reference values. For example, if the reference values chosen to validate a pressure transducer vary from −10 to −1 kPa, x_{min} is −1 kPa. If the reference values used to validate a temperature device vary from 290 to 390 K, x_{min} is 290 K.

(3) The expression ''max'' generally refers to the absolute value of the reference value used during linearity verification that is furthest from zero. This is the value used to scale the first and third tolerances in Table 1 of this section using a_0 and *SEE*. For example, if the reference values chosen to validate a pressure transducer vary from −10 to −1 kPa, then p_{max} is + 10 kPa. If the reference values used to validate a temperature device vary from 290 to 390 K, then T_{max} is 390 K. For gas dividers where ''max'' is expressed as, x_{max}/x_{span}; x_{max} is the maximum gas concentration used during the verification, x_{span} is the undivided, undiluted, span gas concentration, and the resulting ratio is the maximum divider point reference value used during the verification (typically 1). The following are special cases where ''max'' refers to a different value:

(i) For linearity verification with a PM balance, m_{max} refers to the typical mass of a PM filter.

(ii) For linearity verification of torque on the engine's primary output shaft, T_{max} refers to the manufacturer's specified engine torque peak value of the lowest torque engine to be tested.

(4) The specified ranges are inclusive. For example, a specified range of 0.98–1.02 for a_1 means $0.98 \leq a_1 \leq 1.02$.

(5) Linearity verification is optional for systems that pass the flow-rate verification for diluted exhaust as described in § 1065.341 (the propane check) or for systems that agree within ±2% based on a chemical balance of carbon or oxygen of the intake air, fuel, and exhaust.

(6) You must meet the a_1 criteria for these quantities only if the absolute value of the quantity is required, as opposed to a signal that is only linearly proportional to the actual value.

(7) Linearity verification is required for the following temperature measurements:

(i) The following temperature measurements always require linearity verification:

(A) Air intake.

(B) Aftertreatment bed(s), for engines tested with aftertreatment devices subject to cold-start testing.

(C) Dilution air for gaseous and PM sampling, including CVS, double-dilution, and partial-flow systems.

(D) PM sample.

(E) Chiller sample, for gaseous sampling systems that use thermal chillers to dry samples and use chiller temperature to calculate the dewpoint at the outlet of the chiller. For your testing, if you choose to use a high alarm temperature setpoint for the chiller temperature as a constant value in determining the amount of water removed from the emission sample, you may use good engineering judgment to verify the accuracy of the high alarm temperature setpoint instead of linearity verification on the chiller temperature. To verify that the alarm trip point value is no less than 2.0 °C below the reference value at the trip point, we recommend that you input a reference simulated temperature signal below the alarm trip point and increase this signal until the high alarm trips.

(ii) Linearity verification is required for the following temperature measurements if these temperature measurements are specified by the engine manufacturer:

(A) Fuel inlet.

(B) Air outlet to the test cell's charge air cooler air outlet, for engines tested with a laboratory heat exchanger that simulates an installed charge air cooler.

(C) Coolant inlet to the test cell's charge air cooler, for engines tested with a laboratory heat exchanger that simulates an installed charge air cooler.

(D) Oil in the sump/pan.

(E) Coolant before the thermostat, for liquid-cooled engines.

(8) Linearity verification is required for the following pressure measurements:

(i) The following pressure measurements always require linearity verification:

(A) Air intake restriction.

(B) Exhaust back pressure as required in § 1065.130(h).

(C) Barometer.

(D) CVS inlet gage pressure where the raw exhaust enters the tunnel.

(E) Sample dryer, for gaseous sampling systems that use either osmotic-membrane or thermal chillers to dry samples. For your testing, if you choose to use a low alarm pressure setpoint for the sample dryer pressure as a constant value in determining the amount of water removed from the emission sample, you may use good engineering judgment to verify the accuracy of the low alarm pressure setpoint instead of linearity verification on the sample dryer pressure. To verify that the trip point value is no more than 4.0 kPa above the reference value at the trip point, we recommend that you input a reference pressure signal above the alarm trip point and decrease this signal until the low alarm trips.

(ii) Linearity verification is required for the following pressure measurements if these pressure measurements are specified by the engine manufacturer:

(A) The test cell's charge air cooler and interconnecting pipe pressure drop, for turbo-charged engines tested with a

laboratory heat exchanger that simulates an installed charge air cooler.

(B) Fuel outlet.

TABLE 1 OF § 1065.307—MEASUREMENT SYSTEMS THAT REQUIRE LINEARITY VERIFICATION

Measurement system	Quantity	Linearity criteria			
		$\lvert x_{min}(a_1 - 1) + a_0 \rvert$	a_1	*SEE*	r^2
Speed	f_n	$\leq 0.05\% \cdot f_{nmax}$	0.98–1.02	$\leq 2\% \cdot f_{nmax}$	≥0.990
Torque	T	$\leq 1\% \cdot T_{max}$	0.98–1.02	$\leq 2\% \cdot T_{max}$	≥0.990
Electrical power	P	$\leq 1\% \cdot P_{max}$	0.98–1.02	$\leq 2\% \cdot P_{max}$	≥0.990
Current	I	$\leq 1\% \cdot I_{max}$	0.98–1.02	$\leq 2\% \cdot I_{max}$	≥0.990
Voltage	U	$\leq 1\% \cdot U_{max}$	0.98–1.02	$\leq 2\% \cdot U_{max}$	≥0.990
Fuel flow rate	$\dot{m}$	$\leq 1\% \cdot \dot{m}_{max}$	0.98–1.02	$\leq 2\% \cdot \dot{m}_{max}$	≥0.990
Intake-air flow rate[1]	$\dot{n}$	$\leq 1\% \cdot \dot{n}_{max}$	0.98–1.02	$\leq 2\% \cdot \dot{n}_{max}$	≥0.990
Dilution air flow rate[1]	$\dot{n}$	$\leq 1\% \cdot \dot{n}_{max}$	0.98–1.02	$\leq 2\% \cdot \dot{n}_{max}$	≥0.990
Diluted exhaust flow rate[1]	$\dot{n}$	$\leq 1\% \cdot \dot{n}_{max}$	0.98–1.02	$\leq 2\% \cdot \dot{n}_{max}$	≥0.990
Raw exhaust flow rate[1]	$\dot{n}$	$\leq 1\% \cdot \dot{n}_{max}$	0.98–1.02	$\leq 2\% \cdot \dot{n}_{max}$	≥0.990
Batch sampler flow rates[1]	$\dot{n}$	$\leq 1\% \cdot \dot{n}_{max}$	0.98–1.02	$\leq 2\% \cdot \dot{n}_{max}$	≥0.990
Gas dividers	x/x_{span}	$\leq 0.5\% \cdot x_{max}/x_{span}$	0.98–1.02	$\leq 2\% \cdot x_{max}/x_{span}$	≥0.990
Gas analyzers for laboratory testing	x	$\leq 0.5\% \cdot x_{max}$	0.99–1.01	$\leq 1\% \cdot x_{max}$	≥0.998
Gas analyzers for field testing	x	$\leq 1\% \cdot x_{max}$	0.99–1.01	$\leq 1\% \cdot x_{max}$	≥0.998
PM balance	m	$\leq 1\% \cdot m_{max}$	0.99–1.01	$\leq 1\% \cdot m_{max}$	≥0.998
Pressures	p	$\leq 1\% \cdot p_{max}$	0.99–1.01	$\leq 1\% \cdot p_{max}$	≥0.998
Dewpoint for intake air, PM-stabilization and balance environments.	T_{dew}	$\leq 0.5\% \cdot T_{dewmax}$	0.99–1.01	$\leq 0.5\% \cdot T_{dewmax}$	≥0.998
Other dewpoint measurements	T_{dew}	$\leq 1\% \cdot T_{dewmax}$	0.99–1.01	$\leq 1\% \cdot T_{dewmax}$	≥0.998
Analog-to-digital conversion of temperature signals.	T	$\leq 1\% \cdot T_{max}$	0.99–1.01	$\leq 1\% \cdot T_{max}$	≥0.998

[1] For flow meters that determine volumetric flow rate, $\dot{V}_{std}$, you may substitute $\dot{V}_{std}$ for $\dot{n}$ as the quantity and substitute $\dot{V}_{stdmax}$ for $\dot{n}_{max}$.

[79 FR 23763, Apr. 28, 2014]

EFFECTIVE DATE NOTE: At 86 FR 34538, June 29, 2021, § 1065.307 was amended, effective July 29, 2021.

§ 1065.308 Continuous gas analyzer system-response and updating-recording verification—for gas analyzers not continuously compensated for other gas species.

(a) *Scope and frequency*. This section describes a verification procedure for system response and updating-recording frequency for continuous gas analyzers that output a gas species mole fraction (i.e., concentration) using a single gas detector, i.e., gas analyzers not continuously compensated for other gas species measured with multiple gas detectors. See § 1065.309 for verification procedures that apply to continuous gas analyzers that are continuously compensated for other gas species measured with multiple gas detectors. Perform this verification to determine the system response of the continuous gas analyzer and its sampling system. This verification is required for continuous gas analyzers used for transient or ramped-modal testing. You need not perform this verification for batch gas analyzer systems or for continuous gas analyzer systems that are used only for discrete-mode testing. Perform this verification after initial installation (i.e., test cell commissioning) and after any modifications to the system that would change system response. For example, perform this verification if you add a significant volume to the transfer lines by increasing their length or adding a filter; or if you reduce the frequency at which the gas analyzer updates its output or the frequency at which you sample and record gas-analyzer concentrations.

(b) *Measurement principles*. This test verifies that the updating and recording frequencies match the overall system response to a rapid change in the value of concentrations at the sample probe. Gas analyzers and their sampling systems must be optimized such that their overall response to a rapid change in concentration is updated and recorded at an appropriate frequency to prevent loss of information. This test also verifies that the measurement system meets a minimum response

time. You may use the results of this test to determine transformation time, t_{50}, for the purposes of time alignment of continuous data in accordance with §1065.650(c)(2)(i). You may also use an alternate procedure to determine t_{50} in accordance with good engineering judgment. Note that any such procedure for determining t_{50} must account for both transport delay and analyzer response time.

(c) *System requirements.* Demonstrate that each continuous analyzer has adequate update and recording frequencies and has a minimum rise time and a minimum fall time during a rapid change in gas concentration. You must meet one of the following criteria:

(1) The product of the mean rise time, t_{10-90}, and the frequency at which the system records an updated concentration must be at least 5, and the product of the mean fall time, t_{90-10}, and the frequency at which the system records an updated concentration must be at least 5. If the recording frequency is different than the analyzer's output update frequency, you must use the lower of these two frequencies for this verification, which is referred to as the updating-recording frequency. This verification applies to the nominal updating and recording frequencies. This criterion makes no assumption regarding the frequency content of changes in emission concentrations during emission testing; therefore, it is valid for any testing. Also, the mean rise time must be at or below 10 seconds and the mean fall time must be at or below 10 seconds.

(2) The frequency at which the system records an updated concentration must be at least 5 Hz. This criterion assumes that the frequency content of significant changes in emission concentrations during emission testing do not exceed 1 Hz. Also, the mean rise time must be at or below 10 seconds and the mean fall time must be at or below 10 seconds.

(3) You may use other criteria if we approve the criteria in advance.

(4) You may meet the overall PEMS verification in §1065.920 instead of the verification in this section for field testing with PEMS.

(d) *Procedure.* Use the following procedure to verify the response of each continuous gas analyzer:

(1) *Instrument setup.* Follow the analyzer manufacturer's start-up and operating instructions. Adjust the measurement system as needed to optimize performance. Run this verification with the analyzer operating in the same manner you will use for emission testing. If the analyzer shares its sampling system with other analyzers, and if gas flow to the other analyzers will affect the system response time, then start up and operate the other analyzers while running this verification test. You may run this verification test on multiple analyzers sharing the same sampling system at the same time. If you use any analog or real-time digital filters during emission testing, you must operate those filters in the same manner during this verification.

(2) *Equipment setup.* We recommend using minimal lengths of gas transfer lines between all connections and fast-acting three-way valves (2 inlets, 1 outlet) to control the flow of zero and blended span gases to the sample system's probe inlet or a tee near the outlet of the probe. If you inject the gas at a tee near the outlet of the probe, you may correct the transformation time, t_{50}, for an estimate of the transport time from the probe inlet to the tee. Normally the gas flow rate is higher than the sample flow rate and the excess is overflowed out the inlet of the probe. If the gas flow rate is lower than the sample flow rate, the gas concentrations must be adjusted to account for the dilution from ambient air drawn into the probe. We recommend you use the final, stabilized analyzer reading as the final gas concentration. Select span gases for the species being measured. You may use binary or multi-gas span gases. You may use a gas blending or mixing device to blend span gases. A gas blending or mixing device is recommended when blending span gases diluted in N_2 with span gases diluted in air. You may use a multi-gas span gas, such as NO–CO–CO_2-C_3H_8-CH_4, to verify multiple analyzers at the same time. If you use standard binary span gases, you must run separate response tests for each analyzer. In designing your experimental

setup, avoid pressure pulsations due to stopping the flow through the gas-blending device. The change in gas concentration must be at least 20% of the analyzer's range.

(3) *Data collection.* (i) Start the flow of zero gas.

(ii) Allow for stabilization, accounting for transport delays and the slowest analyzer's full response.

(iii) Start recording data. For this verification you must record data at a frequency greater than or equal to that of the updating-recording frequency used during emission testing. You may not use interpolation or filtering to alter the recorded values.

(iv) Switch the flow to allow the blended span gases to flow to the analyzer. If you intend to use the data from this test to determine t_{50} for time alignment, record this time as t_0.

(v) Allow for transport delays and the slowest analyzer's full response.

(vi) Switch the flow to allow zero gas to flow to the analyzer. If you intend to use the data from this test to determine t_{50} for time alignment, record this time as t_{100}.

(vii) Allow for transport delays and the slowest analyzer's full response.

(viii) Repeat the steps in paragraphs (d)(3)(iv) through (vii) of this section to record seven full cycles, ending with zero gas flowing to the analyzers.

(ix) Stop recording.

(e) *Performance evaluation.* (1) If you choose to demonstrate compliance with paragraph (c)(1) of this section, use the data from paragraph (d)(3) of this section to calculate the mean rise time, t_{10-90}, and mean fall time, t_{90-10}, for each of the analyzers being verified. You may use interpolation between recorded values to determine rise and fall times. If the recording frequency used during emission testing is different from the analyzer's output update frequency, you must use the lower of these two frequencies for this verification. Multiply these times (in seconds) by their respective updating-recording frequencies in Hertz (1/second). The resulting product must be at least 5 for both rise time and fall time. If either value is less than 5, increase the updating-recording frequency, or adjust the flows or design of the sampling system to increase the rise time and fall time as needed. You may also configure analog or digital filters before recording to increase rise and fall times. In no case may the mean rise time or mean fall time be greater than 10 seconds.

(2) If a measurement system fails the criterion in paragraph (e)(1) of this section, ensure that signals from the system are updated and recorded at a frequency of at least 5 Hz. In no case may the mean rise time or mean fall time be greater than 10 seconds.

(3) If a measurement system fails the criteria in paragraphs (e)(1) and (2) of this section, you may use the measurement system only if the deficiency does not adversely affect your ability to show compliance with the applicable standards.

(f) *Transformation time,* t_{50}, determination. If you choose to determine t_{50} for purposes of time alignment using data generated in paragraph (d)(3) of this section, calculate the mean t_{0-50} and the mean t_{100-50} from the recorded data. Average these two values to determine the final t_{50} for the purposes of time alignment in accordance with § 1065.650(c)(2)(i).

(g) *Optional procedure.* Instead of using a three-way valve to switch between zero and span gases, you may use a fast-acting two-way valve to switch sampling between ambient air and span gas at the probe inlet. For this alternate procedure, the following provisions apply:

(1) If your probe is sampling from a continuously flowing gas stream (e.g., a CVS tunnel), you may adjust the span gas flow rate to be different than the sample flow rate.

(2) If your probe is sampling from a gas stream that is not continuously flowing (e.g., a raw exhaust stack), you must adjust the span gas flow rate to be less than the sample flow rate so ambient air is always being drawn into the probe inlet. This avoids errors associated with overflowing span gas out of the probe inlet and drawing it back in when sampling ambient air.

(3) When sampling ambient air or ambient air mixed with span gas, all the analyzer readings must be stable within ±0.5% of the target gas concentration step size. If any analyzer reading is outside the specified range, you must

resolve the problem and verify that all the analyzer readings meet this specification.

(4) For oxygen analyzers, you may use purified N_2 as the zero gas and ambient air (plus purified N_2 if needed) as the reference gas. Perform the verification with seven repeat measurements that each consist of stabilizing with purified N_2, switching to ambient air and observing the analyzer's rise and stabilized reading, followed by switching back to purified N_2 and observing the analyzer's fall and stabilized reading.

[73 FR 59325, Oct. 8, 2008, as amended at 79 FR 23766, Apr. 28, 2014]

§ 1065.309 Continuous gas analyzer system-response and updating-recording verification—for gas analyzers continuously compensated for other gas species.

(a) *Scope and frequency.* This section describes a verification procedure for system response and updating-recording frequency for continuous gas analyzers that output a single gas species mole fraction (i.e., concentration) based on a continuous combination of multiple gas species measured with multiple detectors (i.e., gas analyzers continuously compensated for other gas species). See § 1065.308 for verification procedures that apply to continuous gas analyzers that are not continuously compensated for other gas species or that use only one detector for gaseous species. Perform this verification to determine the system response of the continuous gas analyzer and its sampling system. This verification is required for continuous gas analyzers used for transient or ramped-modal testing. You need not perform this verification for batch gas analyzers or for continuous gas analyzers that are used only for discrete-mode testing. For this check we consider water vapor a gaseous constituent. This verification does not apply to any processing of individual analyzer signals that are time-aligned to their t_{50} times and were verified according to § 1065.308. For example, this verification does not apply to correction for water removed from the sample done in post-processing according to § 1065.659 (40 CFR 1066.620 for vehicle testing) and it does not apply to NMHC determination from THC and CH_4 according to § 1065.660. Perform this verification after initial installation (i.e., test cell commissioning) and after any modifications to the system that would change the system response.

(b) *Measurement principles.* This procedure verifies that the updating and recording frequencies match the overall system response to a rapid change in the value of concentrations at the sample probe. It indirectly verifies the time-alignment and uniform response of all the continuous gas detectors used to generate a continuously combined/compensated concentration measurement signal. Gas analyzer systems must be optimized such that their overall response to rapid change in concentration is updated and recorded at an appropriate frequency to prevent loss of information. This test also verifies that the measurement system meets a minimum response time. For this procedure, ensure that all compensation algorithms and humidity corrections are turned on. You may use the results of this test to determine transformation time, t_{50}, for the purposes of time alignment of continuous data in accordance with § 1065.650(c)(2)(i). You may also use an alternate procedure to determine t_{50} consistent with good engineering judgment. Note that any such procedure for determining t_{50} must account for both transport delay and analyzer response time.

(c) *System requirements.* Demonstrate that each continuously combined/compensated concentration measurement has adequate updating and recording frequencies and has a minimum rise time and a minimum fall time during a system response to a rapid change in multiple gas concentrations, including H_2O concentration if H_2O compensation is applied. You must meet one of the following criteria:

(1) The product of the mean rise time, t_{10-90}, and the frequency at which the system records an updated concentration must be at least 5, and the product of the mean fall time, t_{90-10}, and the frequency at which the system records an updated concentration must be at least 5. If the recording frequency is different than the update frequency

of the continuously combined/compensated signal, you must use the lower of these two frequencies for this verification. This criterion makes no assumption regarding the frequency content of changes in emission concentrations during emission testing; therefore, it is valid for any testing. Also, the mean rise time must be at or below 10 seconds and the mean fall time must be at or below 10 seconds.

(2) The frequency at which the system records an updated concentration must be at least 5 Hz. This criterion assumes that the frequency content of significant changes in emission concentrations during emission testing do not exceed 1 Hz. Also, the mean rise time must be at or below 10 seconds and the mean fall time must be at or below 10 seconds.

(3) You may use other criteria if we approve them in advance.

(4) You may meet the overall PEMS verification in § 1065.920 instead of the verification in this section for field testing with PEMS.

(d) *Procedure*. Use the following procedure to verify the response of each continuously compensated analyzer (verify the combined signal, not each individual continuously combined concentration signal):

(1) *Instrument setup*. Follow the analyzer manufacturer's start-up and operating instructions. Adjust the measurement system as needed to optimize performance. Run this verification with the analyzer operating in the same manner you will use for emission testing. If the analyzer shares its sampling system with other analyzers, and if gas flow to the other analyzers will affect the system response time, then start up and operate the other analyzers while running this verification test. You may run this verification test on multiple analyzers sharing the same sampling system at the same time. If you use any analog or real-time digital filters during emission testing, you must operate those filters in the same manner during this verification.

(2) *Equipment setup*. We recommend using minimal lengths of gas transfer lines between all connections and fast-acting three-way valves (2 inlets, 1 outlet) to control the flow of zero and blended span gases to the sample system's probe inlet or a tee near the outlet of the probe. If you inject the gas at a tee near the outlet of the probe, you may correct the transformation time, t_{50}, for an estimate of the transport time from the probe inlet to the tee. Normally the gas flow rate is higher than the sample flow rate and the excess is overflowed out the inlet of the probe. If the gas flow rate is lower than the sample flow rate, the gas concentrations must be adjusted to account for the dilution from ambient air drawn into the probe. We recommend you use the final, stabilized analyzer reading as the final gas concentration. Select span gases for the species being continuously combined, other than H_2O. Select concentrations of compensating species that will yield concentrations of these species at the analyzer inlet that covers the range of concentrations expected during testing. You may use binary or multi-gas span gases. You may use a gas blending or mixing device to blend span gases. A gas blending or mixing device is recommended when blending span gases diluted in N_2 with span gases diluted in air. You may use a multi-gas span gas, such as NO–CO–CO_2-C_3H_8-CH_4, to verify multiple analyzers at the same time. In designing your experimental setup, avoid pressure pulsations due to stopping the flow through the gas blending device. The change in gas concentration must be at least 20% of the analyzer's range. If H_2O correction is applicable, then span gases must be humidified before entering the analyzer; however, you may not humidify NO_2 span gas by passing it through a sealed humidification vessel that contains water. You must humidify NO_2 span gas with another moist gas stream. We recommend humidifying your NO–CO–CO_2-C_3H_8-CH_4, balance N_2 blended gas by flowing the gas mixture through a sealed vessel that humidifies the gas by bubbling it through distilled water and then mixing the gas with dry NO_2 gas, balance purified air. If your system does not use a sample dryer to remove water from the sample gas, you must humidify your span gas to the highest sample H_2O content that you estimate during emission sampling. If your system uses a sample dryer during testing, it must pass the sample dryer

verification check in §1065.342, and you must humidify your span gas to an H_2O content greater than or equal to the level determined in §1065.145(e)(2). If you are humidifying span gases without NO_2, use good engineering judgment to ensure that the wall temperatures in the transfer lines, fittings, and valves from the humidifying system to the probe are above the dewpoint required for the target H_2O content. If you are humidifying span gases with NO_2, use good engineering judgment to ensure that there is no condensation in the transfer lines, fittings, or valves from the point where humidified gas is mixed with NO_2 span gas to the probe. We recommend that you design your setup so that the wall temperatures in the transfer lines, fittings, and valves from the humidifying system to the probe are at least 5 °C above the local sample gas dewpoint. Operate the measurement and sample handling system as you do for emission testing. Make no modifications to the sample handling system to reduce the risk of condensation. Flow humidified gas through the sampling system before this check to allow stabilization of the measurement system's sampling handling system to occur, as it would for an emission test.

(3) *Data collection.* (i) Start the flow of zero gas.

(ii) Allow for stabilization, accounting for transport delays and the slowest analyzer's full response.

(iii) Start recording data. For this verification you must record data at a frequency greater than or equal to that of the updating-recording frequency used during emission testing. You may not use interpolation or filtering to alter the recorded values.

(iv) Switch the flow to allow the blended span gases to flow to the analyzer. If you intend to use the data from this test to determine t_{50} for time alignment, record this time as t_0.

(v) Allow for transport delays and the slowest analyzer's full response.

(vi) Switch the flow to allow zero gas to flow to the analyzer. If you intend to use the data from this test to determine t_{50} for time alignment, record this time as t_{100}.

(vii) Allow for transport delays and the slowest analyzer's full response.

(viii) Repeat the steps in paragraphs (d)(3)(iv) through (vii) of this section to record seven full cycles, ending with zero gas flowing to the analyzers.

(ix) Stop recording.

(e) *Performance evaluations.* (1) If you choose to demonstrate compliance with paragraph (c)(1) of this section, use the data from paragraph (d)(3) of this section to calculate the mean rise time, t_{10-90}, and mean fall time, t_{90-10}, for the continuously combined signal from each analyzer being verified. You may use interpolation between recorded values to determine rise and fall times. If the recording frequency used during emission testing is different from the analyzer's output update frequency, you must use the lower of these two frequencies for this verification. Multiply these times (in seconds) by their respective updating-recording frequencies in Hz (1/second). The resulting product must be at least 5 for both rise time and fall time. If either value is less than 5, increase the updating-recording frequency or adjust the flows or design of the sampling system to increase the rise time and fall time as needed. You may also configure analog or digital filters before recording to increase rise and fall times. In no case may the mean rise time or mean fall time be greater than 10 seconds.

(2) If a measurement system fails the criterion in paragraph (e)(1) of this section, ensure that signals from the system are updated and recorded at a frequency of at least 5 Hz. In no case may the mean rise time or mean fall time be greater than 10 seconds.

(3) If a measurement system fails the criteria in paragraphs (e)(1) and (2) of this section, you may use the measurement system only if the deficiency does not adversely affect your ability to show compliance with the applicable standards.

(f) *Transformation time, t_{50}, determination.* If you choose to determine t_{50} for purposes of time alignment using data generated in paragraph (d)(3) of this section, calculate the mean t_{0-50} and the mean t_{100-50} from the recorded data. Average these two values to determine the final t_{50} for the purposes of time alignment in accordance with §1065.650(c)(2)(i).

(g) *Optional procedure.* Follow the optional procedures in § 1065.308(g), noting that you may use compensating gases mixed with ambient air for oxygen analyzers.

(h) *Analyzers with H_2O compensation sampling downstream of a sample dryer.* You may omit humidifying the span gas as described in this paragraph (h). If an analyzer compensates only for H_2O, you may apply the requirements of § 1065.308 instead of the requirements of this section. You may omit humidifying the span gas if you meet the following conditions:

(1) The analyzer is located downstream of a sample dryer.

(2) The maximum value for H_2O mole fraction downstream of the dryer must be less than or equal to 0.010. Verify this during each sample dryer verification according to § 1065.342.

[73 FR 59326, Oct. 8, 2008, as amended at 75 FR 23039, Apr. 30, 2010; 79 FR 23767, Apr. 28, 2014]

EFFECTIVE DATE NOTE: At 86 FR 34541, June 29, 2021, § 1065.309 was amended, effective July 29, 2021.

MEASUREMENT OF ENGINE PARAMETERS AND AMBIENT CONDITIONS

§ 1065.310 Torque calibration.

(a) *Scope and frequency.* Calibrate all torque-measurement systems including dynamometer torque measurement transducers and systems upon initial installation and after major maintenance. Use good engineering judgment to repeat the calibration. Follow the torque transducer manufacturer's instructions for linearizing your torque sensor's output. We recommend that you calibrate the torque-measurement system with a reference force and a lever arm.

(b) *Recommended procedure to quantify lever-arm length.* Quantify the lever-arm length, NIST-traceable within ±0.5% uncertainty. The lever arm's length must be measured from the centerline of the dynamometer to the point at which the reference force is measured. The lever arm must be perpendicular to gravity (i.e., horizontal), and it must be perpendicular to the dynamometer's rotational axis. Balance the lever arm's torque or quantify its net hanging torque, NIST-traceable within ±1% uncertainty, and account for it as part of the reference torque.

(c) *Recommended procedure to quantify reference force.* We recommend dead-weight calibration, but you may use either of the following procedures to quantify the reference force, NIST-traceable within ±0.5% uncertainty.

(1) *Dead-weight calibration.* This technique applies a known force by hanging known weights at a known distance along a lever arm. Make sure the weights' lever arm is perpendicular to gravity (i.e., horizontal) and perpendicular to the dynamometer's rotational axis. Apply at least six calibration-weight combinations for each applicable torque-measuring range, spacing the weight quantities about equally over the range. Oscillate or rotate the dynamometer during calibration to reduce frictional static hysteresis. Determine each weight's reference force by multiplying its NIST-traceable mass by the local acceleration of Earth's gravity, as described in § 1065.630. Calculate the reference torque as the weights' reference force multiplied by the lever arm reference length.

(2) *Strain gage, load transducer, or proving ring calibration.* This technique applies force either by hanging weights on a lever arm (these weights and their lever arm length are not used as part of the reference torque determination) or by operating the dynamometer at different torques. Apply at least six force combinations for each applicable torque-measuring range, spacing the force quantities about equally over the range. Oscillate or rotate the dynamometer during calibration to reduce frictional static hysteresis. In this case, the reference torque is determined by multiplying the force output from the reference meter (such as a strain gage, load transducer, or proving ring) by its effective lever-arm length, which you measure from the point where the force measurement is made to the dynamometer's rotational axis. Make sure you measure this length perpendicular to the reference meter's measurement axis and perpendicular to the dynamometer's rotational axis.

[79 FR 23768, Apr. 28, 2014]

§ 1065.315 Pressure, temperature, and dewpoint calibration.

(a) Calibrate instruments for measuring pressure, temperature, and dewpoint upon initial installation. Follow the instrument manufacturer's instructions and use good engineering judgment to repeat the calibration, as follows:

(1) *Pressure*. We recommend temperature-compensated, digital-pneumatic, or deadweight pressure calibrators, with data-logging capabilities to minimize transcription errors. We recommend using calibration reference quantities that are NIST-traceable within 0.5% uncertainty.

(2) *Temperature*. We recommend digital dry-block or stirred-liquid temperature calibrators, with data logging capabilities to minimize transcription errors. We recommend using calibration reference quantities that are NIST-traceable within 0.5% uncertainty. You may perform linearity verification for temperature measurement systems with thermocouples, RTDs, and thermistors by removing the sensor from the system and using a simulator in its place. Use a NIST-traceable simulator that is independently calibrated and, as appropriate, cold-junction compensated. The simulator uncertainty scaled to absolute temperature must be less than 0.5% of T_{max}. If you use this option, you must use sensors that the supplier states are accurate to better than 0.5% of T_{max} compared with their standard calibration curve.

(3) *Dewpoint*. We recommend a minimum of three different temperature-equilibrated and temperature-monitored calibration salt solutions in containers that seal completely around the dewpoint sensor. We recommend using calibration reference quantities that are NIST-traceable within 0.5% uncertainty.

(b) You may remove system components for off-site calibration. We recommend specifying calibration reference quantities that are NIST-traceable within 0.5% uncertainty.

[70 FR 40516, July 13, 2005, as amended at 73 FR 37305, June 30, 2008; 75 FR 23040, Apr. 30, 2010; 79 FR 23768, Apr. 28, 2014]

FLOW-RELATED MEASUREMENTS

§ 1065.320 Fuel-flow calibration.

(a) Calibrate fuel-flow meters upon initial installation. Follow the instrument manufacturer's instructions and use good engineering judgment to repeat the calibration.

(b) You may also develop a procedure based on a chemical balance of carbon or oxygen in engine exhaust.

(c) You may remove system components for off-site calibration. When installing a flow meter with an off-site calibration, we recommend that you consider the effects of the tubing configuration upstream and downstream of the flow meter. We recommend specifying calibration reference quantities that are NIST-traceable within 0.5% uncertainty.

EFFECTIVE DATE NOTE: At 86 FR 34541, June 29, 2021, § 1065.320 was amended, effective July 29, 2021.

§ 1065.325 Intake-flow calibration.

(a) Calibrate intake-air flow meters upon initial installation. Follow the instrument manufacturer's instructions and use good engineering judgment to repeat the calibration. We recommend using a calibration subsonic venturi, ultrasonic flow meter or laminar flow element. We recommend using calibration reference quantities that are NIST-traceable within 0.5% uncertainty.

(b) You may remove system components for off-site calibration. When installing a flow meter with an off-site calibration, we recommend that you consider the effects of the tubing configuration upstream and downstream of the flow meter. We recommend specifying calibration reference quantities that are NIST-traceable within 0.5% uncertainty.

(c) If you use a subsonic venturi or ultrasonic flow meter for intake flow measurement, we recommend that you calibrate it as described in § 1065.340.

§ 1065.330 Exhaust-flow calibration.

(a) Calibrate exhaust-flow meters upon initial installation. Follow the instrument manufacturer's instructions and use good engineering judgment to repeat the calibration. We recommend that you use a calibration subsonic

venturi or ultrasonic flow meter and simulate exhaust temperatures by incorporating a heat exchanger between the calibration meter and the exhaust-flow meter. If you can demonstrate that the flow meter to be calibrated is insensitive to exhaust temperatures, you may use other reference meters such as laminar flow elements, which are not commonly designed to withstand typical raw exhaust temperatures. We recommend using calibration reference quantities that are NIST-traceable within 0.5% uncertainty.

(b) You may remove system components for off-site calibration. When installing a flow meter with an off-site calibration, we recommend that you consider the effects of the tubing configuration upstream and downstream of the flow meter. We recommend specifying calibration reference quantities that are NIST-traceable within 0.5% uncertainty.

(c) If you use a subsonic venturi or ultrasonic flow meter for raw exhaust flow measurement, we recommend that you calibrate it as described in § 1065.340.

§ 1065.340 Diluted exhaust flow (CVS) calibration.

(a) *Overview*. This section describes how to calibrate flow meters for diluted exhaust constant-volume sampling (CVS) systems.

(b) *Scope and frequency*. Perform this calibration while the flow meter is installed in its permanent position, except as allowed in paragraph (c) of this section. Perform this calibration after you change any part of the flow configuration upstream or downstream of the flow meter that may affect the flow-meter calibration. Perform this calibration upon initial CVS installation and whenever corrective action does not resolve a failure to meet the diluted exhaust flow verification (*i.e.*, propane check) in § 1065.341.

(c) *Ex-situ CFV and SSV calibration*. You may remove a CFV or SSV from its permanent position for calibration as long as it meets the following requirements when installed in the CVS:

(1) Upon installation of the CFV or SSV into the CVS, use good engineering judgment to verify that you have not introduced any leaks between the CVS inlet and the venturi.

(2) After ex-situ venturi calibration, you must verify all venturi flow combinations for CFVs or at minimum of 10 flow points for an SSV using the propane check as described in § 1065.341. Your propane check result for each venturi flow point may not exceed the tolerance in § 1065.341(f)(5).

(3) To verify your ex-situ calibration for a CVS with more than a single CFV, perform the following check to verify that there are no flow meter entrance effects that can prevent you from passing this verification.

(i) Use a constant flow device like a CFO kit to deliver a constant flow of propane to the dilution tunnel.

(ii) Measure hydrocarbon concentrations at a minimum of 10 separate flow rates for an SSV flow meter, or at all possible flow combinations for a CFV flow meter, while keeping the flow of propane constant. We recommend selecting CVS flow rates in a random order.

(iii) Measure the concentration of hydrocarbon background in the dilution air at the beginning and end of this test. Subtract the average background concentration from each measurement at each flow point before performing the regression analysis in paragraph (c)(3)(iv) of this section.

(iv) Perform a power regression using all the paired values of flow rate and corrected concentration to obtain a relationship in the form of $y = a \cdot x^{b}$. Use concentration as the independent variable and flow rate as the dependent variable. For each data point, calculate the difference between the measured flow rate and the value represented by the curve fit. The difference at each point must be less than ±1% of the appropriate regression value. The value of b must be between −1.005 and −0.995. If your results do not meet these limits, take corrective action consistent with § 1065.341(a).

(d) *Reference flow meter*. Calibrate a CVS flow meter using a reference flow meter such as a subsonic venturi flow meter, a long-radius ASME/NIST flow nozzle, a smooth approach orifice, a laminar flow element, a set of critical flow venturis, or an ultrasonic flow meter. Use a reference flow meter that

reports quantities that are NIST-traceable within ±1% uncertainty. Use this reference flow meter's response to flow as the reference value for CVS flowmeter calibration.

(e) *Configuration*. Calibrate the system with any upstream screens or other restrictions that will be used during testing and that could affect the flow ahead of the CVS flow meter, using good engineering judgment to minimize the effect on the flow distribution. You may not use any upstream screen or other restriction that could affect the flow ahead of the reference flow meter, unless the flow meter has been calibrated with such a restriction. In the case of a free standing SSV reference flow meter, you may not have any upstream screens.

(f) *PDP calibration*. Calibrate a positive-displacement pump (PDP) to determine a flow-versus-PDP speed equation that accounts for flow leakage across sealing surfaces in the PDP as a function of PDP inlet pressure. Determine unique equation coefficients for each speed at which you operate the PDP. Calibrate a PDP flow meter as follows:

(1) Connect the system as shown in Figure 1 of this section.

(2) Leaks between the calibration flow meter and the PDP must be less than 0.3% of the total flow at the lowest calibrated flow point; for example, at the highest restriction and lowest PDP-speed point.

(3) While the PDP operates, maintain a constant temperature at the PDP inlet within ±2% of the mean absolute inlet temperature, $\bar{T}_{in}$.

(4) Set the PDP speed to the first speed point at which you intend to calibrate.

(5) Set the variable restrictor to its wide-open position.

(6) Operate the PDP for at least 3 min to stabilize the system. Continue operating the PDP and record the mean values of at least 30 seconds of sampled data of each of the following quantities:

(i) The mean flow rate of the reference flow meter, $\bar{\dot{n}}_{ref}$. This may include several measurements of different quantities, such as reference meter pressures and temperatures, for calculating $\bar{\dot{n}}_{ref}$.

(ii) The mean temperature at the PDP inlet, $\bar{T}_{in}$.

(iii) The mean static absolute pressure at the PDP inlet, $\bar{p}_{in}$.

(iv) The mean static absolute pressure at the PDP outlet, $\bar{p}_{out}$.

(v) The mean PDP speed, $\bar{f}_{nPDP}$.

(7) Incrementally close the restrictor valve to decrease the absolute pressure at the inlet to the PDP, $\bar{p}_{in}$.

(8) Repeat the steps in paragraphs (e)(6) and (7) of this section to record data at a minimum of six restrictor positions ranging from the wide open restrictor position to the minimum expected pressure at the PDP inlet or the maximum expected differential (outlet minus inlet) pressure across the PDP during testing.

(9) Calibrate the PDP by using the collected data and the equations in §1065.640.

(10) Repeat the steps in paragraphs (e)(6) through (9) of this section for each speed at which you operate the PDP.

(11) Use the equations in §1065.642 to determine the PDP flow equation for emission testing.

(12) Verify the calibration by performing a CVS verification (*i.e.*, propane check) as described in §1065.341.

(13) During emission testing ensure that the PDP is not operated either below the lowest inlet pressure point or above the highest differential pressure point in the calibration data.

(g) *SSV calibration*. Calibrate a subsonic venturi (SSV) to determine its calibration coefficient, C_d, for the expected range of inlet pressures. Calibrate an SSV flow meter as follows:

(1) Connect the system as shown in Figure 1 of this section.

(2) Verify that any leaks between the calibration flow meter and the SSV are less than 0.3% of the total flow at the highest restriction.

(3) Start the blower downstream of the SSV.

(4) While the SSV operates, maintain a constant temperature at the SSV inlet within ±2% of the mean absolute inlet temperature, $\bar{T}_{in}$.

(5) Set the variable restrictor or variable-speed blower to a flow rate greater than the greatest flow rate expected

during testing. You may not extrapolate flow rates beyond calibrated values, so we recommend that you make sure the Reynolds number, $Re^{\#}$, at the SSV throat at the greatest calibrated flow rate is greater than the maximum $Re^{\#}$ expected during testing.

(6) Operate the SSV for at least 3 min to stabilize the system. Continue operating the SSV and record the mean of at least 30 seconds of sampled data of each of the following quantities:

(i) The mean flow rate of the reference flow meter $\overline{n}_{ref}$. This may include several measurements of different quantities for calculating $\overline{n}_{ref}$, such as reference meter pressures and temperatures.

(ii) Optionally, the mean dewpoint of the calibration air, $\bar{T}_{dew}$. See §1065.640 for permissible assumptions.

(iii) The mean temperature at the venturi inlet, $\bar{T}_{in}$.

(iv) The mean static absolute pressure at the venturi inlet, $\bar{P}_{in}$.

(v) The mean static differential pressure between the static pressure at the venturi inlet and the static pressure at the venturi throat, $\Delta\bar{P}_{SSV}$.

(7) Incrementally close the restrictor valve or decrease the blower speed to decrease the flow rate.

(8) Repeat the steps in paragraphs (g)(6) and (7) of this section to record data at a minimum of ten flow rates.

(9) Determine an equation to quantify C_d as a function of $Re^{\#}$ by using the collected data and the equations in §1065.640. Section 1065.640 also includes statistical criteria for validating the C_d versus $Re^{\#}$ equation.

(10) Verify the calibration by performing a CVS verification (*i.e.*, propane check) as described in §1065.341 using the new C_d versus $Re^{\#}$ equation.

(11) Use the SSV only between the minimum and maximum calibrated $Re^{\#}$. If you want to use the SSV at a lower or higher $Re^{\#}$, you must recalibrate the SSV.

(12) Use the equations in §1065.642 to determine SSV flow during a test.

(h) *CFV calibration*. Calibrate a critical-flow venturi (CFV) to verify its discharge coefficient, C_d, up to the highest expected pressure ratio, r, according to §1065.640. Calibrate a CFV flow meter as follows:

(1) Connect the system as shown in Figure 1 of this section.

(2) Verify that any leaks between the calibration flow meter and the CFV are less than 0.3% of the total flow at the highest restriction.

(3) Start the blower downstream of the CFV.

(4) While the CFV operates, maintain a constant temperature at the CFV inlet within ±2% of the mean absolute inlet temperature, $\bar{T}_{in}$.

(5) Set the variable restrictor to its wide-open position. Instead of a variable restrictor, you may alternately vary the pressure downstream of the CFV by varying blower speed or by introducing a controlled leak. Note that some blowers have limitations on nonloaded conditions.

(6) Operate the CFV for at least 3 min to stabilize the system. Continue operating the CFV and record the mean values of at least 30 seconds of sampled data of each of the following quantities:

(i) The mean flow rate of the reference flow meter, $\overline{n}_{ref}$. This may include several measurements of different quantities, such as reference meter pressures and temperatures, for calculating $\overline{n}_{ref}$.

(ii) The mean dewpoint of the calibration air, $\bar{T}_{dew}$. See §1065.640 for permissible assumptions during emission measurements.

(iii) The mean temperature at the venturi inlet, $\bar{T}_{in}$.

(iv) The mean static absolute pressure at the venturi inlet, $\bar{P}_{in}$.

(v) The mean static differential pressure between the CFV inlet and the CFV outlet, $\Delta\bar{P}_{CFV}$.

(7) Incrementally close the restrictor valve or decrease the downstream pressure to decrease the differential pressure across the CFV, Δp_{CFV}.

(8) Repeat the steps in paragraphs (f)(6) and (7) of this section to record mean data at a minimum of ten restrictor positions, such that you test the fullest practical range of $\Delta\bar{P}_{CFV}$ expected during testing. We do not require that you remove calibration components or CVS components to calibrate at the lowest possible restrictions.

(9) Determine C_d and the highest allowable pressure ratio, r, according to § 1065.640.

(10) Use C_d to determine CFV flow during an emission test. Do not use the CFV above the highest allowed r, as determined in § 1065.640.

(11) Verify the calibration by performing a CVS verification (*i.e.*, propane check) as described in § 1065.341.

(12) If your CVS is configured to operate more than one CFV at a time in parallel, calibrate your CVS by one of the following:

(i) Calibrate every combination of CFVs according to this section and § 1065.640. Refer to § 1065.642 for instructions on calculating flow rates for this option.

(ii) Calibrate each CFV according to this section and § 1065.640. Refer to § 1065.642 for instructions on calculating flow rates for this option.

(i) *Ultrasonic flow meter calibration*. [Reserved]

Figure 1 of § 1065.340—CVS calibration configurations.

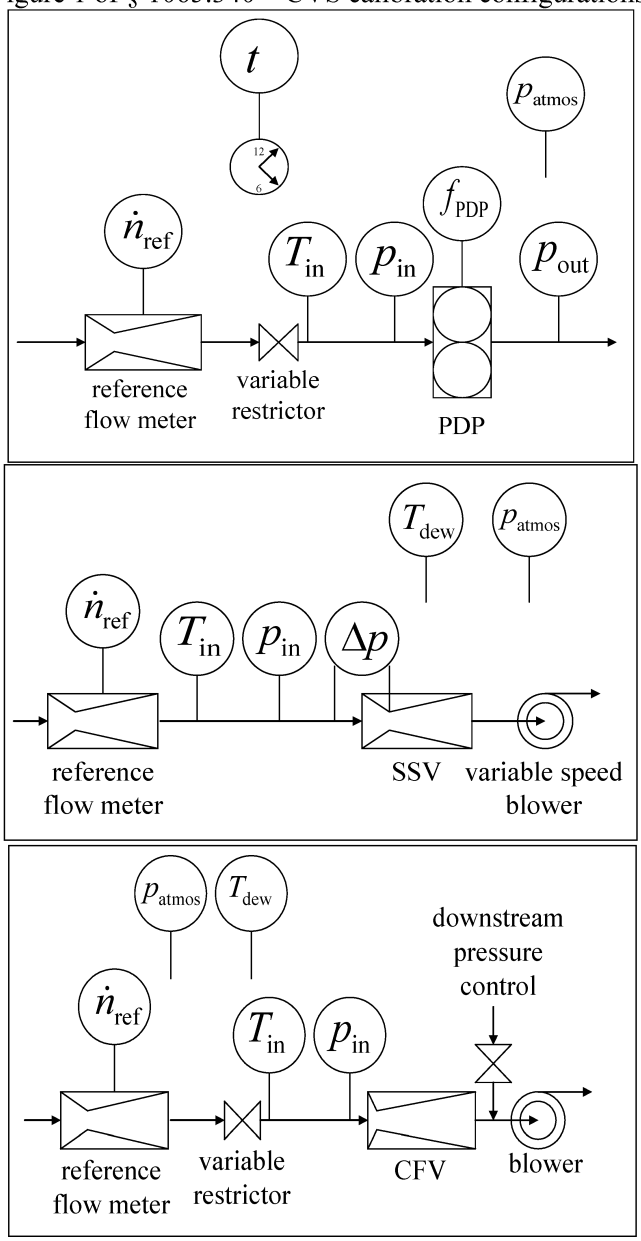

[70 FR 40516, July 13, 2005, as amended at 73 FR 37305, June 30, 2008; 75 FR 68463, Nov. 8, 2010; 76 FR 57445, Sept. 15, 2011; 81 FR 74165, Oct. 25, 2016]

§ 1065.341 CVS, PFD, and batch sampler verification (propane check).

(a) A propane check serves as a CVS verification to determine if there is a discrepancy in measured values of diluted exhaust flow. You may use the same procedure to verify PFDs and batch samplers. For purposes of PFD and batch sampler verification, read the term CVS to mean PFD or batch sampler as appropriate. A propane check also serves as a batch-sampler verification to determine if there is a discrepancy in a batch sampling system that extracts a sample from a CVS, as described in paragraph (g) of this section. Using good engineering judgment and safe practices, this check may be performed using a gas other than propane, such as CO_2 or CO. A failed propane check might indicate one or more problems that may require corrective action, as follows:

(1) *Incorrect analyzer calibration*. Recalibrate, repair, or replace the FID analyzer.

(2) *Leaks*. Inspect CVS tunnel, connections, fasteners, and HC sampling system, and repair or replace components.

(3) *Poor mixing*. Perform the verification as described in this section while traversing a sampling probe across the tunnel's diameter, vertically and horizontally. If the analyzer response indicates any deviation exceeding ±2% of the mean measured concentration, consider operating the CVS at a higher flow rate or installing a mixing plate or orifice to improve mixing.

(4) *Hydrocarbon contamination in the sample system*. Perform the hydrocarbon-contamination verification as described in § 1065.520.

(5) *Change in CVS calibration*. Perform a calibration of the CVS flow meter as described in § 1065.340.

(6) *Flow meter entrance effects*. Inspect the CVS tunnel to determine whether the entrance effects from the piping configuration upstream of the flow meter adversely affect the flow measurement.

(7) *Other problems with the CVS or sampling verification hardware or software*. Inspect the CVS system, CVS verification hardware, and software for discrepancies.

(b) A propane check uses either a reference mass or a reference flow rate of C_3H_8 as a tracer gas in a CVS. Note that if you use a reference flow rate, account for any non-ideal gas behavior of C_3H_8 in the reference flow meter. Refer to § 1065.640 and § 1065.642, which describe how to calibrate and use certain flow meters. Do not use any ideal gas assumptions in § 1065.640 and § 1065.642. The propane check compares the calculated mass of injected C_3H_8 using HC measurements and CVS flow rate measurements with the reference value.

(c) Prepare for the propane check as follows:

(1) If you use a reference mass of C_3H_8 instead of a reference flow rate, obtain a cylinder charged with C_3H_8. Determine the reference cylinder's mass of C_3H_8 within ±0.5% of the amount of C_3H_8 that you expect to use.

(2) Select appropriate flow rates for the CVS and C_3H_8.

(3) Select a C_3H_8 injection port in the CVS. Select the port location to be as close as practical to the location where you introduce engine exhaust into the CVS, or at some point in the laboratory exhaust tubing upstream of this location. Connect the C_3H_8 cylinder to the injection system.

(4) Operate and stabilize the CVS.

(5) Preheat or precool any heat exchangers in the sampling system.

(6) Allow heated and cooled components such as sample lines, filters, chillers, and pumps to stabilize at operating temperature.

(7) You may purge the HC sampling system during stabilization.

(8) If applicable, perform a vacuum side leak verification of the HC sampling system as described in § 1065.345.

(9) You may also conduct any other calibrations or verifications on equipment or analyzers.

(d) If you performed the vacuum-side leak verification of the HC sampling system as described in paragraph (c)(8) of this section, you may use the HC contamination procedure in § 1065.520(f) to verify HC contamination. Otherwise,

zero, span, and verify contamination of the HC sampling system, as follows:

(1) Select the lowest HC analyzer range that can measure the C_3H_8 concentration expected for the CVS and C_3H_8 flow rates.

(2) Zero the HC analyzer using zero air introduced at the analyzer port.

(3) Span the HC analyzer using C_3H_8 span gas introduced at the analyzer port.

(4) Overflow zero air at the HC probe inlet or into a tee near the outlet of the probe.

(5) Measure the stable HC concentration of the HC sampling system as overflow zero air flows. For batch HC measurement, fill the batch container (such as a bag) and measure the HC overflow concentration.

(6) If the overflow HC concentration exceeds 2 μmol/mol, do not proceed until contamination is eliminated. Determine the source of the contamination and take corrective action, such as cleaning the system or replacing contaminated portions.

(7) When the overflow HC concentration does not exceed 2 μmol/mol, record this value as $x_{THCinit}$ and use it to correct for HC contamination as described in §1065.660.

(e) Perform the propane check as follows:

(1) For batch HC sampling, connect clean storage media, such as evacuated bags.

(2) Operate HC measurement instruments according to the instrument manufacturer's instructions.

(3) If you will correct for dilution air background concentrations of HC, measure and record background HC in the dilution air.

(4) Zero any integrating devices.

(5) Begin sampling, and start any flow integrators.

(6) Release the contents of the C_3H_8 reference cylinder at the rate you selected. If you use a reference flow rate of C_3H_8, start integrating this flow rate.

(7) Continue to release the cylinder's contents until at least enough C_3H_8 has been released to ensure accurate quantification of the reference C_3H_8 and the measured C_3H_8.

(8) Shut off the C_3H_8 reference cylinder and continue sampling until you have accounted for time delays due to sample transport and analyzer response.

(9) Stop sampling and stop any integrators.

(f) Perform post-test procedure as follows:

(1) If you used batch sampling, analyze batch samples as soon as practical.

(2) After analyzing HC, correct for contamination and background.

(3) Calculate total C_3H_8 mass based on your CVS and HC data as described in §1065.650 (40 CFR 1066.605 for vehicle testing) and §1065.660, using the molar mass of C_3H_8, M_{C3H8}, instead the effective molar mass of HC, M_{HC}.

(4) If you use a reference mass, determine the cylinder's propane mass within ±0.5% and determine the C_3H_8 reference mass by subtracting the empty cylinder propane mass from the full cylinder propane mass.

(5) Subtract the reference C_3H_8 mass from the calculated mass. If this difference is within ±2% of the reference mass, the CVS passes this verification. If not, take corrective action as described in paragraph (a) of this section.

(g) You may repeat the propane check to verify a batch sampler, such as a PM secondary dilution system. (1) Configure the HC sampling system to extract a sample near the location of the batch sampler's storage media (such as a PM filter). If the absolute pressure at this location is too low to extract an HC sample, you may sample HC from the batch sampler pump's exhaust. Use caution when sampling from pump exhaust because an otherwise acceptable pump leak downstream of a batch sampler flow meter will cause a false failure of the propane check.

(2) Repeat the propane check described in this section, but sample HC from the batch sampler.

(3) Calculate C_3H_8 mass, taking into account any secondary dilution from the batch sampler.

(4) Subtract the reference C_3H_8 mass from the calculated mass. If this difference is within ±5% of the reference mass, the batch sampler passes this

verification. If not, take corrective action as described in paragraph (a) of this section.

[70 FR 40516, July 13, 2005, as amended at 73 FR 37307, June 30, 2008; 73 FR 59328, Oct. 8, 2008; 76 FR 57447, Sept. 15, 2011; 79 FR 23768, Apr. 28, 2014; 81 FR 74167, Oct. 25, 2016]

EFFECTIVE DATE NOTE: At 86 FR 34541, June 29, 2021, § 1065.341 was revised, effective July 29, 2021.

§ 1065.342 Sample dryer verification.

(a) *Scope and frequency*. If you use a sample dryer as allowed in § 1065.145(e)(2) to remove water from the sample gas, verify the performance upon installation, after major maintenance, for thermal chiller. For osmotic membrane dryers, verify the performance upon installation, after major maintenance, and within 35 days of testing.

(b) *Measurement principles*. Water can inhibit an analyzer's ability to properly measure the exhaust component of interest and thus is sometimes removed before the sample gas reaches the analyzer. For example water can negatively interfere with a CLD's NO_X response through collisional quenching and can positively interfere with an NDIR analyzer by causing a response similar to CO.

(c) *System requirements*. The sample dryer must meet the specifications as determined in § 1065.145(e)(2) for dewpoint, T_{dew}, and absolute pressure, p_{total}, downstream of the osmotic-membrane dryer or thermal chiller.

(d) *Sample dryer verification procedure*. Use the following method to determine sample dryer performance. Run this verification with the dryer and associated sampling system operating in the same manner you will use for emission testing (including operation of sample pumps). You may run this verification test on multiple sample dryers sharing the same sampling system at the same time. You may run this verification on the sample dryer alone, but you must use the maximum gas flow rate expected during testing. You may use good engineering judgment to develop a different protocol.

(1) Use PTFE or stainless steel tubing to make necessary connections.

(2) Humidify room air, N_2, or purified air by bubbling it through distilled water in a sealed vessel that humidifies the gas to the highest sample water content that you estimate during emission sampling.

(3) Introduce the humidified gas upstream of the sample dryer. You may disconnect the transfer line from the probe and introduce the humidified gas at the inlet of the transfer line of the sample system used during testing. You may use the sample pumps in the sample system to draw gas through the vessel.

(4) Maintain the sample lines, fittings, and valves from the location where the humidified gas water content is measured to the inlet of the sampling system at a temperature at least 5 °C above the local humidified gas dewpoint. For dryers used in NO_X sample systems, verify the sample system components used in this verification prevent aqueous condensation as required in § 1065.145(d)(1)(i). We recommend that the sample system components be maintained at least 5 °C above the local humidified gas dewpoint to prevent aqueous condensation.

(5) Measure the humidified gas dewpoint, T_{dew}, and absolute pressure, p_{total}, as close as possible to the inlet of the sample dryer or inlet of the sample system to verify the water content is at least as high as the highest value that you estimated during emission sampling. You may verify the water content based on any humidity parameter (e.g. mole fraction water, local dewpoint, or absolute humidity).

(6) Measure the humidified gas dewpoint, T_{dew}, and absolute pressure, p_{total}, as close as possible to the outlet of the sample dryer. Note that the dewpoint changes with absolute pressure. If the dewpoint at the sample dryer outlet is measured at a different pressure, then this reading must be corrected to the dewpoint at the sample dryer absolute pressure, p_{total}.

(7) The sample dryer meets the verification if the dewpoint at the sample dryer pressure as measured in paragraph (d)(6) of this section is less than the dewpoint corresponding to the sample dryer specifications as determined in § 1065.145(e)(2) plus 2 °C or if the mole fraction of water as measured in (d)(6) is less than the corresponding sample dryer specifications plus 0.002 mol/mol.

(e) *Alternate sample dryer verification procedure*. The following method may be used in place of the sample dryer verification procedure in (d) of this section. If you use a humidity sensor for continuous monitoring of dewpoint at the sample dryer outlet you may skip the performance check in §1065.342(d), but you must make sure that the dryer outlet humidity is at or below the minimum value used for quench, interference, and compensation checks.

[73 FR 37307, June 30, 2008, as amended at 73 FR 59328, Oct. 8, 2008; 75 FR 23040, Apr. 30, 2010]

EFFECTIVE DATE NOTE: At 86 FR 34543, June 29, 2021, §1065.342 was amended, effective July 29, 2021.

§1065.345 Vacuum-side leak verification.

(a) *Scope and frequency*. Verify that there are no significant vacuum-side leaks using one of the leak tests described in this section. For laboratory testing, perform the vacuum-side leak verification upon initial sampling system installation, within 8 hours before the start of the first test interval of each duty-cycle sequence, and after maintenance such as pre-filter changes. For field testing, perform the vacuum-side leak verification after each installation of the sampling system on the vehicle, prior to the start of the field test, and after maintenance such as pre-filter changes. This verification does not apply to any full-flow portion of a CVS dilution system.

(b) *Measurement principles*. A leak may be detected either by measuring a small amount of flow when there should be zero flow, or by detecting the dilution of a known concentration of span gas when it flows through the vacuum side of a sampling system.

(c) *Low-flow leak test*. Test a sampling system for low-flow leaks as follows:

(1) Seal the probe end of the system by taking one of the following steps:

(i) Cap or plug the end of the sample probe.

(ii) Disconnect the transfer line at the probe and cap or plug the transfer line.

(iii) Close a leak-tight valve located in the sample transfer line within 92 cm of the probe.

(2) Operate all vacuum pumps. After stabilizing, verify that the flow through the vacuum-side of the sampling system is less than 0.5% of the system's normal in-use flow rate. You may estimate typical analyzer and bypass flows as an approximation of the system's normal in-use flow rate.

(d) *Dilution-of-span-gas leak test*. You may use any gas analyzer for this test. If you use a FID for this test, correct for any HC contamination in the sampling system according to §1065.660. To avoid misleading results from this test, we recommend using only analyzers that have a repeatability of 0.5% or better at the span gas concentration used for this test. Perform a vacuum-side leak test as follows:

(1) Prepare a gas analyzer as you would for emission testing.

(2) Supply span gas to the analyzer span port and record the measured value.

(3) Route overflow span gas to the inlet of the sample probe or at a tee fitting in the transfer line near the exit of the probe. You may use a valve upstream of the overflow fitting to prevent overflow of span gas out of the inlet of the probe, but you must then provide an overflow vent in the overflow supply line.

(4) Verify that the measured overflow span gas concentration is within ±0.5% of the concentration measured in paragraph (d)(2) of this section. A measured value lower than expected indicates a leak, but a value higher than expected may indicate a problem with the span gas or the analyzer itself. A measured value higher than expected does not indicate a leak.

(e) *Vacuum-decay leak test*. To perform this test you must apply a vacuum to the vacuum-side volume of your sampling system and then observe the leak rate of your system as a decay in the applied vacuum. To perform this test you must know the vacuum-side volume of your sampling system to within ±10% of its true volume. For this test you must also use measurement instruments that meet the specifications of subpart C of this part and of this subpart D. Perform a vacuum-decay leak test as follows:

(1) Seal the probe end of the system as close to the probe opening as possible by taking one of the following steps:

(i) Cap or plug the end of the sample probe.

(ii) Disconnect the transfer line at the probe and cap or plug the transfer line.

(iii) Close a leak-tight valve located in the sample transfer line within 92 cm of the probe.

(2) Operate all vacuum pumps. Draw a vacuum that is representative of normal operating conditions. In the case of sample bags, we recommend that you repeat your normal sample bag pump-down procedure twice to minimize any trapped volumes.

(3) Turn off the sample pumps and seal the system. Measure and record the absolute pressure of the trapped gas and optionally the system absolute temperature. Wait long enough for any transients to settle and long enough for a leak at 0.5% to have caused a pressure change of at least 10 times the resolution of the pressure transducer, then again record the pressure and optionally temperature.

(4) Calculate the leak flow rate based on an assumed value of zero for pumped-down bag volumes and based on known values for the sample system volume, the initial and final pressures, optional temperatures, and elapsed time. Using the calculations specified in § 1065.644, verify that the vacuum-decay leak flow rate is less than 0.5% of the system's normal in-use flow rate.

[73 FR 37307, June 30, 2008, as amended at 73 FR 59328, Oct. 8, 2008; 75 FR 23040, Apr. 30, 2010; 81 FR 74167, Oct. 25, 2016]

CO AND CO_2 MEASUREMENTS

§ 1065.350 H_2O interference verification for CO_2 NDIR analyzers.

(a) *Scope and frequency.* If you measure CO_2 using an NDIR analyzer, verify the amount of H_2O interference after initial analyzer installation and after major maintenance.

(b) *Measurement principles.* H_2O can interfere with an NDIR analyzer's response to CO_2.

If the NDIR analyzer uses compensation algorithms that utilize measurements of other gases to meet this interference verification, simultaneously conduct these other measurements to test the compensation algorithms during the analyzer interference verification.

(c) *System requirements.* A CO_2 NDIR analyzer must have an H_2O interference that is within (0.0 ±0.4) mmol/mol, though we strongly recommend a lower interference that is within (0.0 ±0.2) mmol/mol.

(d) *Procedure.* Perform the interference verification as follows:

(1) Start, operate, zero, and span the CO_2 NDIR analyzer as you would before an emission test. If the sample is passed through a dryer during emission testing, you may run this verification test with the dryer if it meets the requirements of § 1065.342. Operate the dryer at the same conditions as you will for an emission test. You may also run this verification test without the sample dryer.

(2) Create a humidified test gas by bubbling zero gas that meets the specifications in § 1065.750 through distilled H_2O in a sealed vessel. If the sample is not passed through a dryer during emission testing, control the vessel temperature to generate an H_2O level at least as high as the maximum expected during emission testing. If the sample is passed through a dryer during emission testing, control the vessel temperature to generate an H_2O level at least as high as the level determined in § 1065.145(e)(2) for that dryer.

(3) Introduce the humidified test gas into the sample system. You may introduce it downstream of any sample dryer, if one is used during testing.

(4) If the sample is not passed through a dryer during this verification test, measure the H_2O mole fraction, x_{H2O}, of the humidified test gas, as close as possible to the inlet of the analyzer. For example, measure dewpoint, T_{dew}, and absolute pressure, p_{total}, to calculate x_{H2O}. Verify that the H_2O content meets the requirement in paragraph (d)(2) of this section. If the sample is passed through a dryer during this verification test, you must verify that the H_2O content of the humidified test gas downstream of the

vessel meets the requirement in paragraph (d)(2) of this section based on either direct measurement of the H_2O content (e.g., dewpoint and pressure) or an estimate based on the vessel pressure and temperature. Use good engineering judgment to estimate the H_2O content. For example, you may use previous direct measurements of H_2O content to verify the vessel's level of saturation.

(5) If a sample dryer is not used in this verification test, use good engineering judgment to prevent condensation in the transfer lines, fittings, or valves from the point where x_{H2O} is measured to the analyzer. We recommend that you design your system so the wall temperatures in the transfer lines, fittings, and valves from the point where x_{H2O} is measured to the analyzer are at least 5 °C above the local sample gas dewpoint.

(6) Allow time for the analyzer response to stabilize. Stabilization time may include time to purge the transfer line and to account for analyzer response.

(7) While the analyzer measures the sample's concentration, record 30 seconds of sampled data. Calculate the arithmetic mean of this data. The analyzer meets the interference verification if this value is within (0.0 ±0.4) mmol/mol.

(e) *Exceptions.* The following exceptions apply:

(1) You may omit this verification if you can show by engineering analysis that for your CO_2 sampling system and your emission-calculation procedures, the H_2O interference for your CO_2 NDIR analyzer always affects your brake-specific emission results within ±0.5% of each of the applicable standards. This specification also applies for vehicle testing, except that it relates to emission results in g/mile or g/kilometer.

(2) You may use a CO_2 NDIR analyzer that you determine does not meet this verification, as long as you try to correct the problem and the measurement deficiency does not adversely affect your ability to show that engines comply with all applicable emission standards.

[70 FR 40516, July 13, 2005, as amended at 73 FR 37308, June 30, 2008; 73 FR 59328, Oct. 8, 2008; 75 FR 23040, Apr. 30, 2010; 76 FR 57447, Sept. 15, 2011; 79 FR 23768, Apr. 28, 2014]

EFFECTIVE DATE NOTE: At 86 FR 34543, June 29, 2021, § 1065.350 was amended, effective July 29, 2021.

§ 1065.355 H_2O and CO_2 interference verification for CO NDIR analyzers.

(a) *Scope and frequency.* If you measure CO using an NDIR analyzer, verify the amount of H_2O and CO_2 interference after initial analyzer installation and after major maintenance.

(b) *Measurement principles.* H_2O and CO_2 can positively interfere with an NDIR analyzer by causing a response similar to CO. If the NDIR analyzer uses compensation algorithms that utilize measurements of other gases to meet this interference verification, simultaneously conduct these other measurements to test the compensation algorithms during the analyzer interference verification.

(c) *System requirements.* A CO NDIR analyzer must have combined H_2O and CO_2 interference that is within ±2 % of the flow-weighted mean concentration of CO expected at the standard, though we strongly recommend a lower interference that is within ±1%.

(d) *Procedure.* Perform the interference verification as follows:

(1) Start, operate, zero, and span the CO NDIR analyzer as you would before an emission test. If the sample is passed through a dryer during emission testing, you may run this verification test with the dryer if it meets the requirements of § 1065.342. Operate the dryer at the same conditions as you will for an emission test. You may also run this verification test without the sample dryer.

(2) Create a humidified CO_2 test gas by bubbling a CO_2 span gas that meets the specifications in § 1065.750 through distilled H_2O in a sealed vessel. If the sample is not passed through a dryer during emission testing, control the vessel temperature to generate an H_2O level at least as high as the maximum expected during emission testing. If the sample is passed through a dryer during emission testing, control the vessel

temperature to generate an H_2O level at least as high as the level determined in §1065.145(e)(2) for that dryer. Use a CO_2 span gas concentration at least as high as the maximum expected during testing.

(3) Introduce the humidified CO_2 test gas into the sample system. You may introduce it downstream of any sample dryer, if one is used during testing.

(4) If the sample is not passed through a dryer during this verification test, measure the H_2O mole fraction, x_{H2O}, of the humidified CO_2 test gas as close as possible to the inlet of the analyzer. For example, measure dewpoint, T_{dew}, and absolute pressure, p_{total}, to calculate x_{H_2O}. Verify that the H_2O content meets the requirement in paragraph (d)(2) of this section. If the sample is passed through a dryer during this verification test, you must verify that the H_2O content of the humidified test gas downstream of the vessel meets the requirement in paragraph (d)(2) of this section based on either direct measurement of the H_2O content (e.g., dewpoint and pressure) or an estimate based on the vessel pressure and temperature. Use good engineering judgment to estimate the H_2O content. For example, you may use previous direct measurements of H_2O content to verify the vessel's level of saturation.

(5) If a sample dryer is not used in this verification test, use good engineering judgment to prevent condensation in the transfer lines, fittings, or valves from the point where x_{H2O} is measured to the analyzer. We recommend that you design your system so that the wall temperatures in the transfer lines, fittings, and valves from the point where x_{H2O} is measured to the analyzer are at least 5 °C above the local sample gas dewpoint.

(6) Allow time for the analyzer response to stabilize. Stabilization time may include time to purge the transfer line and to account for analyzer response.

(7) While the analyzer measures the sample's concentration, record its output for 30 seconds. Calculate the arithmetic mean of this data.

(8) The analyzer meets the interference verification if the result of paragraph (d)(7) of this section meets the tolerance in paragraph (c) of this section.

(9) You may also run interference procedures for CO_2 and H_2O separately. If the CO_2 and H_2O levels used are higher than the maximum levels expected during testing, you may scale down each observed interference value by multiplying the observed interference by the ratio of the maximum expected concentration value to the actual value used during this procedure. You may run separate interference concentrations of H_2O (down to 0.025 mol/mol H_2O content) that are lower than the maximum levels expected during testing, but you must scale up the observed H_2O interference by multiplying the observed interference by the ratio of the maximum expected H_2O concentration value to the actual value used during this procedure. The sum of the two scaled interference values must meet the tolerance in paragraph (c) of this section.

(e) *Exceptions.* The following exceptions apply:

(1) You may omit this verification if you can show by engineering analysis that for your CO sampling system and your emission-calculation procedures, the combined CO_2 and H_2O interference for your CO NDIR analyzer always affects your brake-specific CO emission results within ±0.5% of the applicable CO standard.

(2) You may use a CO NDIR analyzer that you determine does not meet this verification, as long as you try to correct the problem and the measurement deficiency does not adversely affect your ability to show that engines comply with all applicable emission standards.

[70 FR 40516, July 13, 2005, as amended at 73 FR 37308, June 30, 2008; 73 FR 59328, Oct. 8, 2008; 75 FR 23041, Apr. 30, 2010; 79 FR 23769, Apr. 28, 2014]

EFFECTIVE DATE NOTE: At 86 FR 34543, June 29, 2021, §1065.355 was amended, effective July 29, 2021.

HYDROCARBON MEASUREMENTS

§ 1065.360 FID optimization and verification.

(a) *Scope and frequency.* For all FID analyzers, calibrate the FID upon initial installation. Repeat the calibration as needed using good engineering judgment. For a FID that measures THC, perform the following steps:

(1) Optimize the response to various hydrocarbons after initial analyzer installation and after major maintenance as described in paragraph (c) of this section.

(2) Determine the methane (CH_4) response factor after initial analyzer installation and after major maintenance as described in paragraph (d) of this section.

(3) If you determine NMNEHC by subtracting from measured THC, determine the ethane (C_2H_6) response factor after initial analyzer installation and after major maintenance as described in paragraph (f) of this section. Verify the C_2H_6 response within 185 days before testing as described in paragraph (f) of this section.

(b) *Calibration.* Use good engineering judgment to develop a calibration procedure, such as one based on the FID-analyzer manufacturer's instructions and recommended frequency for calibrating the FID. Alternately, you may remove system components for off-site calibration. For a FID that measures THC, calibrate using C_3H_8 calibration gases that meet the specifications of § 1065.750. For a FID that measures CH_4, calibrate using CH_4 calibration gases that meet the specifications of § 1065.750. We recommend FID analyzer zero and span gases that contain approximately the flow-weighted mean concentration of O_2 expected during testing. If you use a FID to measure CH_4 downstream of a nonmethane cutter, you may calibrate that FID using CH_4 calibration gases with the cutter. Regardless of the calibration gas composition, calibrate on a carbon number basis of one (C_1). For example, if you use a C_3H_8 span gas of concentration 200 μmol/mol, span the FID to respond with a value of 600 μmol/mol. As another example, if you use a CH_4 span gas with a concentration of 200 μmol/mol, span the FID to respond with a value of 200 μmol/mol.

(c) *THC FID response optimization.* This procedure is only for FID analyzers that measure THC. Use good engineering judgment for initial instrument start-up and basic operating adjustment using FID fuel and zero air. Heated FIDs must be within their required operating temperature ranges. Optimize FID response at the most common analyzer range expected during emission testing. Optimization involves adjusting flows and pressures of FID fuel, burner air, and sample to minimize response variations to various hydrocarbon species in the exhaust. Use good engineering judgment to trade off peak FID response to propane calibration gases to achieve minimal response variations to different hydrocarbon species. For an example of trading off response to propane for relative responses to other hydrocarbon species, see SAE 770141 (incorporated by reference in § 1065.1010). Determine the optimum flow rates and/or pressures for FID fuel, burner air, and sample and record them for future reference.

(d) *THC FID CH_4 response factor determination.* This procedure is only for FID analyzers that measure THC. Since FID analyzers generally have a different response to CH_4 versus C_3H_8, determine the THC–FID analyzer's CH_4 response factor, $RF_{CH4[THC-FID]}$, after FID optimization. Use the most recent $RF_{CH4[THC-FID]}$ measured according to this section in the calculations for HC determination described in § 1065.660 to compensate for CH_4 response. Determine $RF_{CH4[THC-FID]}$ as follows, noting that you do not determine $RF_{CH4[THC-FID]}$ for FIDs that are calibrated and spanned using CH_4 with a nonmethane cutter:

(1) Select a C_3H_8 span gas concentration that you use to span your analyzers before emission testing. Use only span gases that meet the specifications of § 1065.750. Record the C_3H_8 concentration of the gas.

(2) Select a CH_4 span gas concentration that you use to span your analyzers before emission testing. Use only span gases that meet the specifications of § 1065.750. Record the CH_4 concentration of the gas.

(3) Start and operate the FID analyzer according to the manufacturer's instructions.

(4) Confirm that the FID analyzer has been calibrated using C_3H_8. Calibrate on a carbon number basis of one (C_1). For example, if you use a C_3H_8 span gas of concentration 200 μmol/mol, span the FID to respond with a value of 600 μmol/mol.

(5) Zero the FID with a zero gas that you use for emission testing.

(6) Span the FID with the C_3H_8 span gas that you selected under paragraph (d)(1) of this section.

(7) Introduce the CH_4 span gas that you selected under paragraph (d)(2) of this section into the FID analyzer.

(8) Allow time for the analyzer response to stabilize. Stabilization time may include time to purge the analyzer and to account for its response.

(9) While the analyzer measures the CH_4 concentration, record 30 seconds of sampled data. Calculate the arithmetic mean of these values.

(10) For analyzers with multiple ranges, you need to perform the procedure in this paragraph (d) only on a single range.

(11) Divide the mean measured concentration by the recorded span concentration of the CH_4 calibration gas. The result is the FID analyzer's response factor for CH_4, $RF_{CH4[THC\text{-}FID]}$.

(e) *THC FID CH_4 response verification.* This procedure is only for FID analyzers that measure THC. Verify $RF_{CH4[THC\text{-}FID]}$ as follows:

(1) Perform a CH_4 response factor determination as described in paragraph (d) of this section. If the resulting value of $RF_{CH4[THC\text{-}FID]}$ is within ±5% of its most recent previously determined value, the THC FID passes the CH_4 response verification. For example, if the most recent previous value for $RF_{CH4[THC\text{-}FID]}$ was 1.05 and it increased by 0.05 to become 1.10 or it decreased by 0.05 to become 1.00, either case would be acceptable because ±4.8% is less than ±5%.

(2) If $RF_{CH4[THC\text{-}FID]}$ is not within the tolerance specified in paragraph (e)(1) of this section, use good engineering judgment to verify that the flow rates and/or pressures of FID fuel, burner air, and sample are at their most recent previously recorded values, as determined in paragraph (c) of this section. You may adjust these flow rates as necessary. Then determine the $RF_{CH4[THC\text{-}FID]}$ as described in paragraph (d) of this section and verify that it is within the tolerance specified in this paragraph (e).

(3) If $RF_{CH4[THC\text{-}FID]}$ is not within the tolerance specified in this paragraph (e), re-optimize the FID response as described in paragraph (c) of this section.

(4) Determine a new $RF_{CH4[THC\text{-}FID]}$ as described in paragraph (d) of this section. Use this new value of $RF_{CH4[THC\text{-}FID]}$ in the calculations for HC determination, as described in § 1065.660.

(5) For analyzers with multiple ranges, you need to perform the procedure in this paragraph (e) only on a single range.

(f) *THC FID C_2H_6* response factor determination. This procedure is only for FID analyzers that measure THC. Since FID analyzers generally have a different response to C_2H_6 than C_3H_8, determine the THC–FID analyzer's C_2H_6 response factor, $RF_{C2H6[THC–FID]}$, after FID optimization using the procedure described in paragraph (d) of this section, replacing CH_4 with C_2H_6. Use the most recent $RF_{C2H6[THC–FID]}$ measured according to this section in the calculations for HC determination described in § 1065.660 to compensate for C_2H_6 response.

[73 FR 37308, June 30, 2008, as amended at 75 FR 23041, Apr. 30, 2010; 76 FR 57447, Sept. 15, 2011; 79 FR 23769, Apr. 28, 2014; 81 FR 74168, Oct. 25, 2016]

EFFECTIVE DATE NOTE: At 86 FR 34543, June 29, 2021, § 1065.360 was amended, effective July 29, 2021.

§ 1065.362 Non-stoichiometric raw exhaust FID O_2 interference verification.

(a) *Scope and frequency.* If you use FID analyzers for raw exhaust measurements from engines that operate in a non-stoichiometric mode of combustion (e.g., compression-ignition, lean-burn), verify the amount of FID O_2 interference upon initial installation and after major maintenance.

(b) *Measurement principles.* Changes in O_2 concentration in raw exhaust can affect FID response by changing FID flame temperature. Optimize FID fuel,

burner air, and sample flow to meet this verification. Verify FID performance with the compensation algorithms for FID O_2 interference that you have active during an emission test.

(c) *System requirements.* Any FID analyzer used during testing must meet the FID O_2 interference verification according to the procedure in this section.

(d) *Procedure.* Determine FID O_2 interference as follows, noting that you may use one or more gas dividers to create the reference gas concentrations that are required to perform this verification:

(1) Select three span reference gases that contain a C_3H_8 concentration that you use to span your analyzers before emission testing. Use only span gases that meet the specifications of § 1065.750. You may use CH_4 span reference gases for FIDs calibrated on CH_4 with a nonmethane cutter. Select the three balance gas concentrations such that the concentrations of O_2 and N_2 represent the minimum, maximum, and average O_2 concentrations expected during testing. The requirement for using the average O_2 concentration can be removed if you choose to calibrate the FID with span gas balanced with the average expected oxygen concentration.

(2) Confirm that the FID analyzer meets all the specifications of § 1065.360.

(3) Start and operate the FID analyzer as you would before an emission test. Regardless of the FID burner's air source during testing, use zero air as the FID burner's air source for this verification.

(4) Zero the FID analyzer using the zero gas used during emission testing.

(5) Span the FID analyzer using a span gas that you use during emission testing.

(6) Check the zero response of the FID analyzer using the zero gas used during emission testing. If the mean zero response of 30 seconds of sampled data is within ±0.5% of the span reference value used in paragraph (d)(5) of this section, then proceed to the next step; otherwise restart the procedure at paragraph (d)(4) of this section.

(7) Check the analyzer response using the span gas that has the minimum concentration of O_2 expected during testing. Record the mean response of 30 seconds of stabilized sample data as $x_{O2minHC}$.

(8) Check the zero response of the FID analyzer using the zero gas used during emission testing. If the mean zero response of 30 seconds of stabilized sample data is within ±0.5% of the span reference value used in paragraph (d)(5) of this section, then proceed to the next step; otherwise restart the procedure at paragraph (d)(4) of this section.

(9) Check the analyzer response using the span gas that has the average concentration of O_2 expected during testing. Record the mean response of 30 seconds of stabilized sample data as $x_{O2avgHC}$.

(10) Check the zero response of the FID analyzer using the zero gas used during emission testing. If the mean zero response of 30 seconds of stabilized sample data is within ±0.5% of the span reference value used in paragraph (d)(5) of this section, proceed to the next step; otherwise restart the procedure at paragraph (d)(4) of this section.

(11) Check the analyzer response using the span gas that has the maximum concentration of O_2 expected during testing. Record the mean response of 30 seconds of stabilized sample data as $x_{O2maxHC}$.

(12) Check the zero response of the FID analyzer using the zero gas used during emission testing. If the mean zero response of 30 seconds of stabilized sample data is within ±0.5% of the span reference value used in paragraph (d)(5) of this section, then proceed to the next step; otherwise restart the procedure at paragraph (d)(4) of this section.

(13) Calculate the percent difference between $x_{O2maxHC}$ and its reference gas concentration. Calculate the percent difference between $x_{O2avgHC}$ and its reference gas concentration. Calculate the percent difference between $x_{O2minHC}$ and its reference gas concentration. Determine the maximum percent difference of the three. This is the O_2 interference.

(14) If the O_2 interference is within ±2%, the FID passes the O_2 interference verification; otherwise perform one or more of the following to address the deficiency:

(i) Repeat the verification to determine if a mistake was made during the procedure.

(ii) Select zero and span gases for emission testing that contain higher or lower O_2 concentrations and repeat the verification.

(iii) Adjust FID burner air, fuel, and sample flow rates. Note that if you adjust these flow rates on a THC FID to meet the O_2 interference verification, you have reset RF_{CH4} for the next RF_{CH4} verification according to § 1065.360. Repeat the O_2 interference verification after adjustment and determine RF_{CH4}.

(iv) Repair or replace the FID and repeat the O_2 interference verification.

(v) Demonstrate that the deficiency does not adversely affect your ability to demonstrate compliance with the applicable emission standards.

(15) For analyzers with multiple ranges, you need to perform the procedure in this paragraph (d) only on a single range.

[70 FR 40516, July 13, 2005, as amended at 73 FR 37309, June 30, 2008; 79 FR 23770, Apr. 28, 2014]

§ 1065.365 Nonmethane cutter penetration fractions.

(a) *Scope and frequency*. If you use a FID analyzer and a nonmethane cutter (NMC) to measure methane (CH_4), determine the nonmethane cutter's penetration fractions of CH_4, PF_{CH_4}, and ethane, $PF_{C_2H_6}$. As detailed in this section, these penetration fractions may be determined as a combination of NMC penetration fractions and FID analyzer response factors, depending on your particular NMC and FID analyzer configuration. Perform this verification after installing the nonmethane cutter. Repeat this verification within 185 days of testing to verify that the catalytic activity of the cutter has not deteriorated. Note that because nonmethane cutters can deteriorate rapidly and without warning if they are operated outside of certain ranges of gas concentrations and outside of certain temperature ranges, good engineering judgment may dictate that you determine a nonmethane cutter's penetration fractions more frequently.

(b) *Measurement principles*. A nonmethane cutter is a heated catalyst that removes nonmethane hydrocarbons from an exhaust sample stream before the FID analyzer measures the remaining hydrocarbon concentration. An ideal nonmethane cutter would have a CH_4 penetration fraction, PF_{CH4}, of 1.000, and the penetration fraction for all other nonmethane hydrocarbons would be 0.000, as represented by PF_{C2H6}. The emission calculations in § 1065.660 use the measured values from this verification to account for less than ideal NMC performance.

(c) *System requirements*. We do not limit NMC penetration fractions to a certain range. However, we recommend that you optimize a nonmethane cutter by adjusting its temperature to achieve a $PF_{CH4} > 0.85$ and a $PF_{C2H6} < 0.02$, as determined by paragraphs (d), (e), or (f) of this section, as applicable. If we use a nonmethane cutter for testing, it will meet this recommendation. If adjusting NMC temperature does not result in achieving both of these specifications simultaneously, we recommend that you replace the catalyst material. Use the most recently determined penetration values from this section to calculate HC emissions according to § 1065.660 and § 1065.665 as applicable.

(d) *Procedure for a FID calibrated with the NMC*. The method described in this paragraph (d) is recommended over the procedures specified in paragraphs (e) and (f) of this section. If your FID arrangement is such that a FID is always calibrated to measure CH_4 with the NMC, then span that FID with the NMC using a CH_4 span gas, set the product of that FID's CH_4 response factor and CH_4 penetration fraction, $RFPF_{CH4[NMC\text{-}FID]}$, equal to 1.0 for all emission calculations, and determine its combined ethane (C_2H_6) response factor and penetration fraction, $RFPF_{C2H6[NMC\text{-}FID]}$ as follows:

(1) Select CH_4 and C_2H_6 analytical gas mixtures and ensure that both mixtures meet the specifications of § 1065.750. Select a CH_4 concentration that you would use for spanning the FID during emission testing and select a C_2H_6 concentration that is typical of the peak NMHC concentration expected at the hydrocarbon standard or equal to the THC analyzer's span value. For CH_4 analyzers with multiple ranges,

perform this procedure on the highest range used for emission testing.

(2) Start, operate, and optimize the nonmethane cutter according to the manufacturer's instructions, including any temperature optimization.

(3) Confirm that the FID analyzer meets all the specifications of § 1065.360.

(4) Start and operate the FID analyzer according to the manufacturer's instructions.

(5) Zero and span the FID with the nonmethane cutter as you would during emission testing. Span the FID through the cutter by using CH_4 span gas.

(6) Introduce the C_2H_6 analytical gas mixture upstream of the nonmethane cutter. Use good engineering judgment to address the effect of hydrocarbon contamination if your point of introduction is vastly different from the point of zero/span gas introduction.

(7) Allow time for the analyzer response to stabilize. Stabilization time may include time to purge the nonmethane cutter and to account for the analyzer's response.

(8) While the analyzer measures a stable concentration, record 30 seconds of sampled data. Calculate the arithmetic mean of these data points.

(9) Divide the mean C_2H_6 concentration by the reference concentration of C_2H_6, converted to a C_1 basis. The result is the C_2H_6 combined response factor and penetration fraction, $RFPF_{C2H6[NMC–FID]}$. Use this combined response factor and penetration fraction and the product of the CH_4 response factor and CH_4 penetration fraction, $RFPF_{CH4[NMC–FID]}$, set to 1.0 in emission calculations according to § 1065.660(b)(2)(i), § 1065.660(d)(1)(i), or § 1065.665, as applicable.

(e) *Procedure for a FID calibrated with propane, bypassing the NMC.* If you use a single FID for THC and CH_4 determination with an NMC that is calibrated with propane, C_3H_8, by bypassing the NMC, determine its penetration fractions, $PF_{C2H6[NMC-FID]}$ and $PF_{CH4[NMC-FID]}$, as follows:

(1) Select CH_4 and C_2H_6 analytical gas mixtures and ensure that both mixtures meet the specifications of § 1065.750. Select a CH_4 concentration that you would use for spanning the FID during emission testing and select a C_2H_6 concentration that is typical of the peak NMHC concentration expected at the hydrocarbon standard and the C_2H_6 concentration typical of the peak total hydrocarbon (THC) concentration expected at the hydrocarbon standard or equal to the THC analyzer's span value. For CH_4 analyzers with multiple ranges, perform this procedure on the highest range used for emission testing.

(2) Start and operate the nonmethane cutter according to the manufacturer's instructions, including any temperature optimization.

(3) Confirm that the FID analyzer meets all the specifications of § 1065.360.

(4) Start and operate the FID analyzer according to the manufacturer's instructions.

(5) Zero and span the FID as you would during emission testing. Span the FID by bypassing the cutter and by using C_3H_8 span gas.

(6) Introduce the C_2H_6 analytical gas mixture upstream of the nonmethane cutter. Use good engineering judgment to address the effect of hydrocarbon contamination if your point of introduction is vastly different from the point of zero/span gas introduction.

(7) Allow time for the analyzer response to stabilize. Stabilization time may include time to purge the nonmethane cutter and to account for the analyzer's response.

(8) While the analyzer measures a stable concentration, record 30 seconds of sampled data. Calculate the arithmetic mean of these data points.

(9) Reroute the flow path to bypass the nonmethane cutter, introduce the C_2H_6 analytical gas mixture, and repeat the steps in paragraph (e)(7) through (e)(8) of this section.

(10) Divide the mean C_2H_6 concentration measured through the nonmethane cutter by the mean C_2H_6 concentration measured after bypassing the nonmethane cutter. The result is the C_2H_6 penetration fraction, $PF_{C2H6[NMC–FID]}$. Use this penetration fraction according to § 1065.660(b)(2)(ii), § 1065.660(d)(1)(ii), or § 1065.665, as applicable.

(11) Repeat the steps in paragraphs (e)(6) through (e)(10) of this section, but with the CH_4 analytical gas mixture instead of C_2H_6. The result will be the

CH_4 penetration fraction, $PF_{CH4[NMC-FID]}$. Use this penetration fraction according to §1065.660(b)(2)(ii), §1065.660(c)(1)(ii), or §1065.665, as applicable.

(f) *Procedure for a FID calibrated with CH_4, bypassing the NMC.* If you use a FID with an NMC that is calibrated with CH_4, by bypassing the NMC, determine its combined ethane (C_2H_6) response factor and penetration fraction, $RFPF_{C2H6[NMC-FID]}$, as well as its CH_4 penetration fraction, $PF_{CH4[NMC-FID]}$, as follows:

(1) Select CH_4 and C_2H_6 analytical gas mixtures and ensure that both mixtures meet the specifications of §1065.750. Select a CH_4 concentration that you would use for spanning the FID during emission testing and select a C_2H_6 concentration that is typical of the peak NMHC concentration expected at the hydrocarbon standard or equal to the THC analyzer's span value. For CH_4 analyzers with multiple ranges, perform this procedure on the highest range used for emission testing.

(2) Start and operate the nonmethane cutter according to the manufacturer's instructions, including any temperature optimization.

(3) Confirm that the FID analyzer meets all the specifications of §1065.360.

(4) Start and operate the FID analyzer according to the manufacturer's instructions.

(5) Zero and span the FID as you would during emission testing. Span the FID by bypassing the cutter and by using CH_4 span gas. Note that you must span the FID on a C_1 basis. For example, if your span gas has a methane reference value of 100 μmol/mol, the correct FID response to that span gas is 100 μmol/mol because there is one carbon atom per CH_4 molecule.

(6) Introduce the C_2H_6 analytical gas mixture upstream of the nonmethane cutter. Use good engineering judgment to address the effect of hydrocarbon contamination if your point of introduction is vastly different from the point of zero/span gas introduction.

(7) Allow time for the analyzer response to stabilize. Stabilization time may include time to purge the nonmethane cutter and to account for the analyzer's response.

(8) While the analyzer measures a stable concentration, record 30 seconds of sampled data. Calculate the arithmetic mean of these data points.

(9) Divide the mean C_2H_6 concentration by the reference concentration of C_2H_6, converted to a C_1 basis. The result is the C_2H_6 combined response factor and penetration fraction, $RFPF_{C2H6[NMC-FID]}$. Use this combined response factor and penetration fraction according to §1065.660(b)(2)(iii), §1065.660(d)(1)(iii), or §1065.665, as applicable.

(10) Introduce the CH_4 analytical gas mixture upstream of the nonmethane cutter. Use good engineering judgment to address the effect of hydrocarbon contamination if your point of introduction is vastly different from the point of zero/span gas introduction.

(11) Allow time for the analyzer response to stabilize. Stabilization time may include time to purge the nonmethane cutter and to account for the analyzer's response.

(12) While the analyzer measures a stable concentration, record 30 seconds of sampled data. Calculate the arithmetic mean of these data points.

(13) Reroute the flow path to bypass the nonmethane cutter, introduce the CH_4 analytical gas mixture, and repeat the steps in paragraphs (e)(11) and (12) of this section.

(14) Divide the mean CH_4 concentration measured through the nonmethane cutter by the mean CH_4 concentration measured after bypassing the nonmethane cutter. The result is the CH_4 penetration fraction, $PF_{CH4[NMC-FID]}$. Use this penetration fraction according to §1065.660(b)(2)(iii), §1065.660(d)(1)(iii), or §1065.665, as applicable.

[73 FR 37310, June 30, 2008, as amended at 74 FR 56513, Oct. 30, 2009; 79 FR 23770, Apr. 28, 2014; 81 FR 74168, Oct. 25, 2016]

EFFECTIVE DATE NOTE: At 86 FR 34536, June 29, 2021, §1065.365 was amended, effective July 29, 2021.

§1065.366 Interference verification for FTIR analyzers.

(a) *Scope and frequency.* If you measure CH_4, C_2H_6, NMHC, or NMNEHC using an FTIR analyzer, verify the amount of interference after initial analyzer installation and after major maintenance.

(b) *Measurement principles.* Interference gases can interfere with certain analyzers by causing a response similar to the target analyte. If the analyzer uses compensation algorithms that utilize measurements of other gases to meet this interference verification, simultaneously conduct these other measurements to test the compensation algorithms during the analyzer interference verification.

(c) *System requirements.* An FTIR analyzer must have combined interference that is within ±2% of the flow-weighted mean concentration of CH_4, NMHC, or NMNEHC expected at the standard, though we strongly recommend a lower interference that is within ±1%.

(d) *Procedure.* Perform the interference verification for an FTIR analyzer using the same procedure that applies for N_2O analyzers in § 1065.375(d).

[81 FR 74168, Oct. 25, 2016]

§ 1065.369 H_2O, CO, and CO_2 interference verification for photoacoustic alcohol analyzers.

(a) *Scope and frequency.* If you measure ethanol or methanol using a photoacoustic analyzer, verify the amount of H_2O, CO, and CO_2 interference after initial analyzer installation and after major maintenance.

(b) *Measurement principles.* H_2O, CO, and CO_2 can positively interfere with a photoacoustic analyzer by causing a response similar to ethanol or methanol. If the photoacoustic analyzer uses compensation algorithms that utilize measurements of other gases to meet this interference verification, simultaneously conduct these other measurements to test the compensation algorithms during the analyzer interference verification.

(c) *System requirements.* Photoacoustic analyzers must have combined interference that is within (0.0 ±0.5) μmol/mol. We strongly recommend a lower interference that is within (0.0 ±0.25) μmol/mol.

(d) *Procedure.* Perform the interference verification by following the procedure in § 1065.375(d), comparing the results to paragraph (c) of this section.

[79 FR 23770, Apr. 28, 2014]

NO_X AND N_2O MEASUREMENTS

§ 1065.370 CLD CO_2 and H_2O quench verification.

(a) *Scope and frequency.* If you use a CLD analyzer to measure NO_X, verify the amount of H_2O and CO_2 quench after installing the CLD analyzer and after major maintenance.

(b) *Measurement principles.* H_2O and CO_2 can negatively interfere with a CLD's NO_X response by collisional quenching, which inhibits the chemiluminescent reaction that a CLD utilizes to detect NO_X. This procedure and the calculations in § 1065.675 determine quench and scale the quench results to the maximum mole fraction of H_2O and the maximum CO_2 concentration expected during emission testing. If the CLD analyzer uses quench compensation algorithms that utilize H_2O and/or CO_2 measurement instruments, evaluate quench with these instruments active and evaluate quench with the compensation algorithms applied.

(c) *System requirements.* A CLD analyzer must have a combined H_2O and CO_2 quench of ±2% or less, though we strongly recommend a quench of ±1% or less. Combined quench is the sum of the CO_2 quench determined as described in paragraph (d) of this section, plus the H_2O quench determined in paragraph (e) of this section.

(d) *CO_2 quench verification procedure.* Use the following method to determine CO_2 quench by using a gas divider that blends binary span gases with zero gas as the diluent and meets the specifications in § 1065.248, or use good engineering judgment to develop a different protocol:

(1) Use PTFE or stainless steel tubing to make necessary connections.

(2) Configure the gas divider such that nearly equal amounts of the span and diluent gases are blended with each other.

(3) If the CLD analyzer has an operating mode in which it detects NO-only, as opposed to total NO_X, operate the CLD analyzer in the NO-only operating mode.

(4) Use a CO_2 span gas that meets the specifications of § 1065.750 and a concentration that is approximately twice the maximum CO_2 concentration expected during emission testing.

(5) Use an NO span gas that meets the specifications of § 1065.750 and a concentration that is approximately twice the maximum NO concentration expected during emission testing.

(6) Zero and span the CLD analyzer. Span the CLD analyzer with the NO span gas from paragraph (d)(5) of this section through the gas divider. Connect the NO span gas to the span port of the gas divider; connect a zero gas to the diluent port of the gas divider; use the same nominal blend ratio selected in paragraph (d)(2) of this section; and use the gas divider's output concentration of NO to span the CLD analyzer. Apply gas property corrections as necessary to ensure accurate gas division.

(7) Connect the CO_2 span gas to the span port of the gas divider.

(8) Connect the NO span gas to the diluent port of the gas divider.

(9) While flowing NO and CO_2 through the gas divider, stabilize the output of the gas divider. Determine the CO_2 concentration from the gas divider output, applying gas property correction as necessary to ensure accurate gas division, or measure it using an NDIR. Record this concentration, x_{CO2act}, and use it in the quench verification calculations in § 1065.675. Alternatively, you may use a simple gas blending device and use an NDIR to determine this CO_2 concentration. If you use an NDIR, it must meet the requirements of this part for laboratory testing and you must span it with the CO_2 span gas from paragraph (d)(4) of this section.

(10) Measure the NO concentration downstream of the gas divider with the CLD analyzer. Allow time for the analyzer response to stabilize. Stabilization time may include time to purge the transfer line and to account for analyzer response. While the analyzer measures the sample's concentration, record the analyzer's output for 30 seconds. Calculate the arithmetic mean concentration from these data, x_{NOmeas}. Record x_{NOmeas}, and use it in the quench verification calculations in § 1065.675.

(11) Calculate the actual NO concentration at the gas divider's outlet, x_{NOact}, based on the span gas concentrations and x_{CO2act} according to Eq. 1065.675–2. Use the calculated value in the quench verification calculations in Eq. 1065.675–1.

(12) Use the values recorded according to this paragraph (d) and paragraph (e) of this section to calculate quench as described in § 1065.675.

(e) *H_2O quench verification procedure.* Use the following method to determine H_2O quench, or use good engineering judgment to develop a different protocol:

(1) Use PTFE or stainless steel tubing to make necessary connections.

(2) If the CLD analyzer has an operating mode in which it detects NO-only, as opposed to total NO_X, operate the CLD analyzer in the NO-only operating mode.

(3) Use an NO span gas that meets the specifications of § 1065.750 and a concentration that is near the maximum concentration expected during emission testing.

(4) Zero and span the CLD analyzer. Span the CLD analyzer with the NO span gas from paragraph (e)(3) of this section, record the span gas concentration as x_{NOdry}, and use it in the quench verification calculations in § 1065.675.

(5) Humidify the NO span gas by bubbling it through distilled H_2O in a sealed vessel. If the humidified NO span gas sample does not pass through a sample dryer for this verification test, control the vessel temperature to generate an H_2O level approximately equal to the maximum mole fraction of H_2O expected during emission testing. If the humidified NO span gas sample does not pass through a sample dryer, the quench verification calculations in § 1065.675 scale the measured H_2O quench to the highest mole fraction of H_2O expected during emission testing. If the humidified NO span gas sample passes through a dryer for this verification test, control the vessel temperature to generate an H_2O level at least as high as the level determined in § 1065.145(e)(2). For this case, the quench verification calculations in § 1065.675 do not scale the measured H_2O quench.

(6) Introduce the humidified NO test gas into the sample system. You may introduce it upstream or downstream of any sample dryer that is used during emission testing. Note that the sample dryer must meet the sample dryer verification check in § 1065.342.

(7) Measure the mole fraction of H_2O in the humidified NO span gas downstream of the sample dryer, $x_{H2Omeas}$. We recommend that you measure xH_{2Omeas} as close as possible to the CLD analyzer inlet. You may calculate $x_{H2Omeas}$ from measurements of dew point, T_{dew}, and absolute pressure, $p$total.

(8) Use good engineering judgment to prevent condensation in the transfer lines, fittings, or valves from the point where $x_{H2Omeas}$ is measured to the analyzer. We recommend that you design your system so the wall temperatures in the transfer lines, fittings, and valves from the point where $x_{H2Omeas}$ is measured to the analyzer are at least 5 °C above the local sample gas dew point.

(9) Measure the humidified NO span gas concentration with the CLD analyzer. Allow time for the analyzer response to stabilize. Stabilization time may include time to purge the transfer line and to account for analyzer response. While the analyzer measures the sample's concentration, record the analyzer's output for 30 seconds. Calculate the arithmetic mean of these data, x_{NOwet}. Record x_{NOwet} and use it in the quench verification calculations in § 1065.675.

(f) *Corrective action*. If the sum of the H_2O quench plus the CO_2 quench is less than −2% or greater than + 2%, take corrective action by repairing or replacing the analyzer. Before running emission tests, verify that the corrective action successfully restored the analyzer to proper functioning.

(g) *Exceptions*. The following exceptions apply:

(1) You may omit this verification if you can show by engineering analysis that for your NO_X sampling system and your emission calculation procedures, the combined CO_2 and H_2O interference for your NO_X CLD analyzer always affects your brake-specific NO_X emission results within no more than ±1% of the applicable NO_X standard. If you certify to a combined emission standard (such as a NO_X + NMHC standard), scale your NO_X results to the combined standard based on the measured results (after incorporating deterioration factors, if applicable). For example, if your final NO_X + NMHC value is half of the emission standard, double the NO_X result to estimate the level of NO_X emissions corresponding to the applicable standard.

(2) You may use a NO_X CLD analyzer that you determine does not meet this verification, as long as you try to correct the problem and the measurement deficiency does not adversely affect your ability to show that engines comply with all applicable emission standards.

[73 FR 59328, Oct. 8, 2008, as amended at 73 FR 73789, Dec. 4, 2008; 75 FR 23041, Apr. 30, 2010; 76 FR 57447, Sept. 15, 2011; 79 FR 23771, Apr. 28, 2014; 81 FR 74168, Oct. 25, 2016]

EFFECTIVE DATE NOTE: At 86 FR 34545, June 29, 2021, § 1065.370 was amended, effective July 29, 2021.

§ 1065.372 NDUV analyzer HC and H_2O interference verification.

(a) *Scope and frequency*. If you measure NO_X using an NDUV analyzer, verify the amount of H_2O and hydrocarbon interference after initial analyzer installation and after major maintenance.

(b) *Measurement principles*. Hydrocarbons and H_2O can positively interfere with an NDUV analyzer by causing a response similar to NO_X. If the NDUV analyzer uses compensation algorithms that utilize measurements of other gases to meet this interference verification, simultaneously conduct such measurements to test the algorithms during the analyzer interference verification.

(c) *System requirements*. A NO_X NDUV analyzer must have combined H_2O and HC interference within ±2% of the flow-weighted mean concentration of NO_X expected at the standard, though we strongly recommend keeping interference within ±1%.

(d) *Procedure*. Perform the interference verification as follows:

(1) Start, operate, zero, and span the NO_X NDUV analyzer according to the instrument manufacturer's instructions.

(2) We recommend that you extract engine exhaust to perform this verification. Use a CLD that meets the specifications of subpart C of this part to quantify NO_X in the exhaust. Use the CLD response as the reference value. Also measure HC in the exhaust with a

FID analyzer that meets the specifications of subpart C of this part. Use the FID response as the reference hydrocarbon value.

(3) Upstream of any sample dryer, if one is used during testing, introduce the engine exhaust to the NDUV analyzer.

(4) Allow time for the analyzer response to stabilize. Stabilization time may include time to purge the transfer line and to account for analyzer response.

(5) While all analyzers measure the sample's concentration, record 30 seconds of sampled data, and calculate the arithmetic means for the three analyzers.

(6) Subtract the CLD mean from the NDUV mean.

(7) Multiply this difference by the ratio of the flow-weighted mean HC concentration expected at the standard to the HC concentration measured during the verification. The analyzer meets the interference verification of this section if this result is within ±2% of the NO_X concentration expected at the standard.

(e) *Exceptions*. The following exceptions apply:

(1) You may omit this verification if you can show by engineering analysis that for your NO_X sampling system and your emission calculation procedures, the combined HC and H_2O interference for your NO_X NDUV analyzer always affects your brake-specific NO_X emission results by less than 0.5% of the applicable NO_X standard.

[70 FR 40516, July 13, 2005, as amended at 73 FR 37312, June 30, 2008; 76 FR 57447, Sept. 15, 2011]

§ 1065.375 Interference verification for N_2O analyzers.

(a) *Scope and frequency*. See § 1065.275 to determine whether you need to verify the amount of interference after initial analyzer installation and after major maintenance.

(b) *Measurement principles*. Interference gases can positively interfere with certain analyzers by causing a response similar to N_2O. If the analyzer uses compensation algorithms that utilize measurements of other gases to meet this interference verification, simultaneously conduct these other measurements to test the compensation algorithms during the analyzer interference verification.

(c) *System requirements*. Analyzers must have combined interference that is within (0.0 ±1.0) μmol/mol. We strongly recommend a lower interference that is within (0.0 ±0.5) μmol/mol.

(d) *Procedure*. Perform the interference verification as follows:

(1) Start, operate, zero, and span the N_2O analyzer as you would before an emission test. If the sample is passed through a dryer during emission testing, you may run this verification test with the dryer if it meets the requirements of § 1065.342. Operate the dryer at the same conditions as you will for an emission test. You may also run this verification test without the sample dryer.

(2) Create a humidified test gas by bubbling a multi component span gas that incorporates the target interference species and meets the specifications in § 1065.750 through distilled H_2O in a sealed vessel. If the sample is not passed through a dryer during emission testing, control the vessel temperature to generate an H_2O level at least as high as the maximum expected during emission testing. If the sample is passed through a dryer during emission testing, control the vessel temperature to generate an H_2O level at least as high as the level determined in § 1065.145(e)(2) for that dryer. Use interference span gas concentrations that are at least as high as the maximum expected during testing.

(3) Introduce the humidified interference test gas into the sample system. You may introduce it downstream of any sample dryer, if one is used during testing.

(4) If the sample is not passed through a dryer during this verification test, measure the H_2O mole fraction, x_{H_2O}, of the humidified interference test gas as close as possible to the inlet of the analyzer. For example, measure dewpoint, T_{dew}, and absolute pressure, p_{total}, to calculate x_{H_2O}. Verify that the H_2O content meets the requirement in paragraph (d)(2) of this section. If the sample is passed through a dryer during this verification test, you must verify that the H_2O content of the humidified test gas downstream

of the vessel meets the requirement in paragraph (d)(2) of this section based on either direct measurement of the H_2O content (e.g., dewpoint and pressure) or an estimate based on the vessel pressure and temperature. Use good engineering judgment to estimate the H_2O content. For example, you may use previous direct measurements of H_2O content to verify the vessel's level of saturation.

(5) If a sample dryer is not used in this verification test, use good engineering judgment to prevent condensation in the transfer lines, fittings, or valves from the point where x_{H_2O} is measured to the analyzer. We recommend that you design your system so that the wall temperatures in the transfer lines, fittings, and valves from the point where x_{H_2O} is measured to the analyzer are at least 5 °C above the local sample gas dewpoint.

(6) Allow time for the analyzer response to stabilize. Stabilization time may include time to purge the transfer line and to account for analyzer response.

(7) While the analyzer measures the sample's concentration, record its output for 30 seconds. Calculate the arithmetic mean of this data. When performed with all the gases simultaneously, this is the combined interference.

(8) The analyzer meets the interference verification if the result of paragraph (d)(7) of this section meets the tolerance in paragraph (c) of this section.

(9) You may also run interference procedures separately for individual interference gases. If the interference gas levels used are higher than the maximum levels expected during testing, you may scale down each observed interference value (the arithmetic mean of 30 second data described in paragraph (d)(7) of this section) by multiplying the observed interference by the ratio of the maximum expected concentration value to the actual value used during this procedure. You may run separate interference concentrations of H_2O (down to 0.025 mol/mol H_2O content) that are lower than the maximum levels expected during testing, but you must scale up the observed H_2O interference by multiplying the observed interference by the ratio of the maximum expected H_2O concentration value to the actual value used during this procedure. The sum of the scaled interference values must meet the tolerance for combined interference as specified in paragraph (c) of this section.

[74 FR 56515, Oct. 30, 2009, as amended at 23771, Apr. 28, 2014; 81 FR 74168, Oct. 25, 2016]

EFFECTIVE DATE NOTE: At 86 FR 34545, June 29, 2021, § 1065.375 was amended, effective July 29, 2021.

§ 1065.376 Chiller NO_2 penetration.

(a) *Scope and frequency.* If you use a chiller to dry a sample upstream of a NO_X measurement instrument, but you don't use an NO_2-to-NO converter upstream of the chiller, you must perform this verification for chiller NO_2 penetration. Perform this verification after initial installation and after major maintenance.

(b) *Measurement principles.* A chiller removes H_2O, which can otherwise interfere with a NO_X measurement. However, liquid H_2O remaining in an improperly designed chiller can remove NO_2 from the sample. If a chiller is used without an NO_2-to-NO converter upstream, it could remove NO_2 from the sample prior NO_X measurement.

(c) *System requirements.* A chiller must allow for measuring at least 95% of the total NO_2 at the maximum expected concentration of NO_2.

(d) *Procedure.* Use the following procedure to verify chiller performance:

(1) *Instrument setup.* Follow the analyzer and chiller manufacturers' start-up and operating instructions. Adjust the analyzer and chiller as needed to optimize performance.

(2) *Equipment setup and data collection.* (i) Zero and span the total NO_X gas analyzer(s) as you would before emission testing.

(ii) Select an NO_2 calibration gas, balance gas of dry air, that has an NO_2 concentration within ±5% of the maximum NO_2 concentration expected during testing.

(iii) Overflow this calibration gas at the gas sampling system's probe or overflow fitting. Allow for stabilization of the total NO_X response, accounting only for transport delays and instrument response.

(iv) Calculate the mean of 30 seconds of recorded total NO_X data and record this value as x_{NOXref}.

(v) Stop flowing the NO_2 calibration gas.

(vi) Next saturate the sampling system by overflowing a dewpoint generator's output, set at a dewpoint of 50 °C, to the gas sampling system's probe or overflow fitting. Sample the dewpoint generator's output through the sampling system and chiller for at least 10 minutes until the chiller is expected to be removing a constant rate of H_2O.

(vii) Immediately switch back to overflowing the NO_2 calibration gas used to establish x_{NOxref}. Allow for stabilization of the total NO_X response, accounting only for transport delays and instrument response. Calculate the mean of 30 seconds of recorded total NO_X data and record this value as $x_{NOxmeas}$.

(viii) Correct $x_{NOxmeas}$ to x_{NOxdry} based upon the residual H_2O vapor that passed through the chiller at the chiller's outlet temperature and pressure.

(3) *Performance evaluation.* If x_{NOxdry} is less than 95% of x_{NOxref}, repair or replace the chiller.

(e) *Exceptions.* The following exceptions apply:

(1) You may omit this verification if you can show by engineering analysis that for your NO_X sampling system and your emission calculations procedures, the chiller always affects your brake-specific NO_X emission results by less than 0.5% of the applicable NO_X standard.

(2) You may use a chiller that you determine does not meet this verification, as long as you try to correct the problem and the measurement deficiency does not adversely affect your ability to show that engines comply with all applicable emission standards.

[73 FR 37312, June 30, 2008, as amended at 79 FR 23771, Apr. 28, 2014]

§ 1065.378 NO_2-to-NO converter conversion verification.

(a) *Scope and frequency.* If you use an analyzer that measures only NO to determine NO_X, you must use an NO_2-to-NO converter upstream of the analyzer. Perform this verification after installing the converter, after major maintenance and within 35 days before an emission test. This verification must be repeated at this frequency to verify that the catalytic activity of the NO_2-to-NO converter has not deteriorated.

(b) *Measurement principles.* An NO_2-to-NO converter allows an analyzer that measures only NO to determine total NO_X by converting the NO_2 in exhaust to NO.

(c) *System requirements.* An NO_2-to-NO converter must allow for measuring at least 95% of the total NO_2 at the maximum expected concentration of NO_2.

(d) *Procedure.* Use the following procedure to verify the performance of a NO_2-to-NO converter:

(1) *Instrument setup.* Follow the analyzer and NO_2-to-NO converter manufacturers' start-up and operating instructions. Adjust the analyzer and converter as needed to optimize performance.

(2) *Equipment setup.* Connect an ozonator's inlet to a zero-air or oxygen source and connect its outlet to one port of a three-way tee fitting. Connect an NO span gas to another port, and connect the NO_2-to-NO converter inlet to the last port.

(3) *Adjustments and data collection.* Perform this check as follows:

(i) Set ozonator air off, turn ozonator power off, and set the analyzer to NO mode. Allow for stabilization, accounting only for transport delays and instrument response.

(ii) Use an NO concentration that is representative of the peak total NO_X concentration expected during testing. The NO_2 content of the gas mixture shall be less than 5% of the NO concentration. Record the concentration of NO by calculating the mean of 30 seconds of sampled data from the analyzer and record this value as x_{NOref}.

(iii) Turn on the ozonator O_2 supply and adjust the O_2 flow rate so the NO indicated by the analyzer is about 10 percent less than x_{NOref}. Record the concentration of NO by calculating the mean of 30 seconds of sampled data from the analyzer and record this value as $x_{NO+O2mix}$.

(iv) Switch the ozonator on and adjust the ozone generation rate so the NO measured by the analyzer is 20 percent of x_{NOref} or a value which would

simulate the maximum concentration of NO_2 expected during testing, while maintaining at least 10 percent unreacted NO. This ensures that the ozonator is generating NO_2 at the maximum concentration expected during testing. Record the concentration of NO by calculating the mean of 30 seconds of sampled data from the analyzer and record this value as x_{NOmeas}.

(v) Switch the NO_X analyzer to NO_X mode and measure total NO_X. Record the concentration of NO_X by calculating the mean of 30 seconds of sampled data from the analyzer and record this value as $x_{NOxmeas}$.

(vi) Switch off the ozonator but maintain gas flow through the system. The NO_X analyzer will indicate the NO_X in the NO + O_2 mixture. Record the concentration of NO_X by calculating the mean of 30 seconds of sampled data from the analyzer and record this value as $x_{NOx+O2mix}$.

(vii) Turn off the ozonator O_2 supply. The NO_X analyzer will indicate the NO_X in the original NO-in-N_2 mixture. Record the concentration of NO_X by calculating the mean of 30 seconds of sampled data from the analyzer and record this value as x_{NOxref}. This value should be no more than 5 percent above the x_{NOref} value.

(4) *Performance evaluation.* Calculate the efficiency of the NO_X converter by substituting the concentrations obtained into the following equation:

$$efficiency = \left(1 + \frac{x_{NOxmeas} - x_{NOx+O2mix}}{x_{NO+O2mix} - x_{NOmeas}}\right) \cdot 100\%$$

(5) If the result is less than 95%, repair or replace the NO_2-to-NO converter.

(e) *Exceptions.* The following exceptions apply:

(1) You may omit this verification if you can show by engineering analysis that for your NO_X sampling system and your emission calculations procedures, the converter always affects your brake-specific NO_X emission results by less than 0.5% of the applicable NO_X standard.

[70 FR 40516, July 13, 2005, as amended at 73 FR 37313, June 30, 2008; 73 FR 59330, Oct. 8, 2008; 76 FR 57447, Sept. 15, 2011]

PM MEASUREMENTS

§ 1065.390 PM balance verifications and weighing process verification.

(a) *Scope and frequency.* This section describes three verifications.

(1) Independent verification of PM balance performance within 370 days before weighing any filter.

(2) Zero and span the balance within 12 h before weighing any filter.

(3) Verify that the mass determination of reference filters before and after a filter weighing session are less than a specified tolerance.

(b) *Independent verification.* Have the balance manufacturer (or a representative approved by the balance manufacturer) verify the balance performance within 370 days of testing. Balances have internal weights that compensate for drift due to environmental changes. These internal weights must be verified as part of this independent verification with external, certified calibration weights that meet the specifications in § 1065.790.

(c) *Zeroing and spanning.* You must verify balance performance by zeroing and spanning it with at least one calibration weight. Also, any external weights you use must meet the specifications in § 1065.790. Any weights internal to the PM balance used for this verification must be verified as described in paragraph (b) of this section.

(1) Use a manual procedure in which you zero the balance and span the balance with at least one calibration weight. If you normally use mean values by repeating the weighing process to improve the accuracy and precision of PM measurements, use the same process to verify balance performance.

(2) You may use an automated procedure to verify balance performance.

For example most balances have internal weights for automatically verifying balance performance.

(d) *Reference sample weighing*. Verify all mass readings during a weighing session by weighing reference PM sample media (e.g., filters) before and after a weighing session. A weighing session may be as short as desired, but no longer than 80 hours, and may include both pre-test and post-test mass readings. We recommend that weighing sessions be eight hours or less. Successive mass determinations of each reference PM sample media (e.g., filter) must return the same value within ±10 μg or ±10% of the net PM mass expected at the standard (if known), whichever is higher. If successive reference PM sample media (e.g., filter) weighing events fail this criterion, invalidate all individual test media (e.g., filter) mass readings occurring between the successive reference media (e.g., filter) mass determinations. You may reweigh these media (e.g., filter) in another weighing session. If you invalidate a pre-test media (e.g., filter) mass determination, that test interval is void. Perform this verification as follows:

(1) Keep at least two samples of unused PM sample media (e.g., filters) in the PM-stabilization environment. Use these as references. If you collect PM with filters, select unused filters of the same material and size for use as references. You may periodically replace references, using good engineering judgment.

(2) Stabilize references in the PM stabilization environment. Consider references stabilized if they have been in the PM-stabilization environment for a minimum of 30 min, and the PM-stabilization environment has been within the specifications of §1065.190(d) for at least the preceding 60 min.

(3) Exercise the balance several times with a reference sample. We recommend weighing ten samples without recording the values.

(4) Zero and span the balance. Using good engineering judgment, place a test mass such as a calibration weight on the balance, then remove it. After spanning, confirm that the balance returns to a zero reading within the normal stabilization time.

(5) Weigh each of the reference media (e.g., filters) and record their masses. We recommend using substitution weighing as described in §1065.590(j). If you normally use mean values by repeating the weighing process to improve the accuracy and precision of the reference media (e.g., filter) mass, you must use mean values of sample media (e.g., filter) masses.

(6) Record the balance environment dewpoint, ambient temperature, and atmospheric pressure.

(7) Use the recorded ambient conditions to correct results for buoyancy as described in §1065.690. Record the buoyancy-corrected mass of each of the references.

(8) Subtract each reference media's (e.g., filter's) buoyancy-corrected reference mass from its previously measured and recorded buoyancy-corrected mass.

(9) If any of the reference filters' observed mass changes by more than that allowed under this paragraph, you must invalidate all PM mass determinations made since the last successful reference media (*e.g.* filter) mass validation. You may discard reference PM media (*e.g.* filters) if only one of the filter's mass changes by more than the allowable amount and you can positively identify a special cause for that filter's mass change that would not have affected other in-process filters. Thus, the validation can be considered a success. In this case, you do not have to include the contaminated reference media when determining compliance with paragraph (d)(10) of this section, but the affected reference filter must be immediately discarded and replaced prior to the next weighing session.

(10) If any of the reference masses change by more than that allowed under this paragraph (d), invalidate all PM results that were determined between the two times that the reference masses were determined. If you discarded reference PM sample media according to paragraph (d)(9) of this section, you must still have at least one reference mass difference that meets the criteria in this paragraph (d). Otherwise, you must invalidate all PM results that were determined between the

two times that the reference media (e.g., filters) masses were determined.

[73 FR 37313, June 30, 2008, as amended at 75 FR 23042, Apr. 30, 2010; 75 FR 68463, Nov. 8, 2010; 81 FR 74168, Oct. 25, 2016]

§ 1065.395 Inertial PM balance verifications.

This section describes how to verify the performance of an inertial PM balance.

(a) *Independent verification.* Have the balance manufacturer (or a representative approved by the balance manufacturer) verify the inertial balance performance within 370 days before testing.

(b) *Other verifications.* Perform other verifications using good engineering judgment and instrument manufacturer recommendations.

Subpart E—Engine Selection, Preparation, and Maintenance

§ 1065.401 Test engine selection.

While all engine configurations within a certified engine family must comply with the applicable standards in the standard-setting part, you need not test each configuration for certification.

(a) Select an engine configuration within the engine family for testing, as follows:

(1) Test the engine that we specify, whether we issue general guidance or give you specific instructions.

(2) If we do not tell you which engine to test, follow any instructions in the standard-setting part.

(3) If we do not tell you which engine to test and the standard-setting part does not include specifications for selecting test engines, use good engineering judgment to select the engine configuration within the engine family that is most likely to exceed an emission standard.

(b) In the absence of other information, the following characteristics are appropriate to consider when selecting the engine to test:

(1) Maximum fueling rates.

(2) Maximum loads.

(3) Maximum in-use speeds.

(4) Highest sales volume.

(c) For our testing, we may select any engine configuration within the engine family.

§ 1065.405 Test engine preparation and maintenance.

This part 1065 describes how to test engines for a variety of purposes, including certification testing, production-line testing, and in-use testing. Depending on which type of testing is being conducted, different preparation and maintenance requirements apply for the test engine.

(a) If you are testing an emission-data engine for certification, make sure it is built to represent production engines, consistent with paragraph (f) of this section. This includes governors that you normally install on production engines. Production engines should also be tested with their installed governors. If your engine is equipped with multiple user-selectable governor types and if the governor does not manipulate the emission control system (i.e., the governor only modulates an ''operator demand'' signal such as commanded fuel rate, torque, or power), choose the governor type that allows the test cell to most accurately follow the duty cycle. If the governor manipulates the emission control system, treat it as an adjustable parameter. See paragraph (b) of this section for guidance on setting adjustable parameters. If you do not install governors on production engines, simulate a governor that is representative of a governor that others will install on your production engines. In certain circumstances, you may incorporate test cell components to simulate an in-use configuration, consistent with good engineering judgment. For example, §§ 1065.122 and 1065.125 allow the use of test cell components to represent engine cooling and intake air systems. The provisions in § 1065.110(e) also apply to emission-data engines for certification.

(b) We may set adjustable parameters to any value in the valid range, and you are responsible for controlling emissions over the full valid range. For each adjustable parameter, if the standard-setting part has no unique requirements and if we have not specified a value, use good engineering judgment

to select the most common setting. If information on the most common setting is not available, select the setting representing the engine's original shipped configuration. If information on the most common and original settings is not available, set the adjustable parameter in the middle of the valid range.

(c) Testing generally occurs only after the test engine has undergone a stabilization step (or in-use operation). If the engine has not already been stabilized, run the test engine, with all emission control systems operating, long enough to stabilize emission levels. Note that you must generally use the same stabilization procedures for emission-data engines for which you apply the same deterioration factors so low-hour emission-data engines are consistent with the low-hour engine used to develop the deterioration factor.

(1) Unless otherwise specified in the standard-setting part, you may consider emission levels stable without measurement after 50 h of operation. If the engine needs less operation to stabilize emission levels, record your reasons and the methods for doing this, and give us these records if we ask for them. If the engine will be tested for certification as a low-hour engine, see the standard-setting part for limits on testing engines to establish low-hour emission levels.

(2) You may stabilize emissions from a catalytic exhaust aftertreatment device by operating it on a different engine, consistent with good engineering judgment. Note that good engineering judgment requires that you consider both the purpose of the test and how your stabilization method will affect the development and application of deterioration factors. For example, this method of stabilization is generally not appropriate for production engines. We may also allow you to stabilize emissions from a catalytic exhaust aftertreatment device by operating it on an engine-exhaust simulator.

(d) Record any maintenance, modifications, parts changes, diagnostic or emissions testing and document the need for each event. You must provide this information if we request it.

(e) For accumulating operating hours on your test engines, select engine operation that represents normal in-use operation for the engine family.

(f) If your engine will be used in a vehicle equipped with a canister for storing evaporative hydrocarbons for eventual combustion in the engine and the test sequence involves a cold-start or hot-start duty cycle, attach a canister to the engine before running an emission test. You may omit using an evaporative canister for any hot-stabilized duty cycles. You may request to omit using an evaporative canister during testing if you can show that it would not affect your ability to show compliance with the applicable emission standards. You may operate the engine without an installed canister for service accumulation. Prior to an emission test, use the following steps to precondition a canister and attach it to your engine:

(1) Use a canister and plumbing arrangement that represents the in-use configuration of the largest capacity canister in all expected applications.

(2) Precondition the canister as described in 40 CFR 86.132–96(j).

(3) Connect the canister's purge port to the engine.

(4) Plug the canister port that is normally connected to the fuel tank.

(g) This paragraph (g) defines the components that are considered to be part of the engine for laboratory testing. See §1065.110 for provisions related to system boundaries with respect to work inputs and outputs.

(1) This paragraph (g)(1) describes certain criteria for considering a component to be part of the test engine. The criteria are intended to apply broadly, such that a component would generally be considered part of the engine in cases of uncertainty. Except as specified in paragraph (g)(2) of this section, an engine-related component meeting both the following criteria is considered to be part of the test engine for purposes of testing and for stabilizing emission levels, preconditioning, and measuring emission levels:

(i) The component directly affects the functioning of the engine, is related to controlling emissions, or

transmits engine power. This would include engine cooling systems, engine controls, and transmissions.

(ii) The component is covered by the applicable certificate of conformity. For example, this criterion would typically exclude radiators not described in an application for certification.

(2) This paragraph (g)(2) applies for engine-related components that meet the criteria of paragraph (g)(1) of this section, but that are part of the laboratory setup or are used for other engines. Such components are considered to be part of the test engine for preconditioning, but not for engine stabilization. For example, if you test your engines using the same laboratory exhaust tubing for all tests, there would be no restrictions on the number of test hours that could be accumulated with the tubing, but it would need to be preconditioned separately for each engine.

[79 FR 23772, Apr. 28, 2014]

§ 1065.410 Maintenance limits for stabilized test engines.

(a) After you stabilize the test engine's emission levels, you may do maintenance as allowed by the standard-setting part. However, you may not do any maintenance based on emission measurements from the test engine (i.e., unscheduled maintenance).

(b) For any critical emission-related maintenance—other than what we specifically allow in the standard-setting part—you must completely test an engine for emissions before and after doing any maintenance that might affect emissions, unless we waive this requirement.

(c) If you inspect an engine, keep a record of the inspection and update your application to document any changes that result. You may use any kind of equipment, instrument, or tool to identify bad engine components or perform maintenance if it is available at dealerships and other service outlets.

(d) If we determine that a part failure, system malfunction, or associated repairs have made the engine's emission controls unrepresentative of production engines, you may no longer use it as an emission-data engine. Also, if your test engine has a major mechanical failure that requires you to take it apart, you may no longer use it as an emission-data engine.

[70 FR 40516, July 13, 2005, as amended at 73 FR 37314, June 30, 2008; 79 FR 23773, Apr. 28, 2014; 80 FR 9118, Feb. 19, 2015]

EFFECTIVE DATE NOTE: At 86 FR 34545, June 29, 2021, § 1065.410 was amended, effective July 29, 2021.

§ 1065.415 Durability demonstration.

If the standard-setting part requires durability testing, you must accumulate service in a way that represents how you expect the engine to operate in use. You may accumulate service hours using an accelerated schedule, such as through continuous operation or by using duty cycles that are more aggressive than in-use operation, subject to any pre-approval requirements established in the applicable standard-setting part.

(a) *Maintenance.* The following limits apply to the maintenance that we allow you to do on an emission-data engine:

(1) You may perform scheduled maintenance that you recommend to operators, but only if it is consistent with the standard-setting part's restrictions.

(2) You may perform additional maintenance only as specified in § 1065.410 or allowed by the standard-setting part.

(b) *Emission measurements.* Perform emission tests following the provisions of the standard setting part and this part, as applicable. Perform emission tests to determine deterioration factors consistent with good engineering judgment. Evenly space any tests between the first and last test points throughout the durability period, unless we approve otherwise.

[70 FR 40516, July 13, 2005, as amended at 73 FR 37315, June 30, 2008]

Subpart F—Performing an Emission Test Over Specified Duty Cycles

§ 1065.501 Overview.

(a) Use the procedures detailed in this subpart to measure engine emissions over a specified duty cycle. Refer to subpart J of this part for field test

procedures that describe how to measure emissions during in-use engine operation. This section describes how to:

(1) Map your engine, if applicable, by recording specified speed and torque data, as measured from the engine's primary output shaft.

(2) Transform normalized duty cycles into reference duty cycles for your engine by using an engine map.

(3) Prepare your engine, equipment, and measurement instruments for an emission test.

(4) Perform pre-test procedures to verify proper operation of certain equipment and analyzers.

(5) Record pre-test data.

(6) Start or restart the engine and sampling systems.

(7) Sample emissions throughout the duty cycle.

(8) Record post-test data.

(9) Perform post-test procedures to verify proper operation of certain equipment and analyzers.

(10) Weigh PM samples.

(b) Unless we specify otherwise, you may control the regeneration timing of infrequently regenerated aftertreatment devices such as diesel particulate filters using good engineering judgment. You may control the regeneration timing using a sequence of engine operating conditions or you may initiate regeneration with an external regeneration switch or other command. This provision also allows you to ensure that a regeneration event does not occur during an emission test.

(c) An emission test generally consists of measuring emissions and other parameters while an engine follows one or more duty cycles that are specified in the standard-setting part. There are two general types of duty cycles:

(1) *Transient cycles.* Transient duty cycles are typically specified in the standard-setting part as a second-by-second sequence of speed commands and normalized torque (or power) commands. Operate an engine over a transient cycle such that the speed and torque of the engine's primary output shaft follows the target values. Proportionally sample emissions and other parameters and use the calculations in subpart G of this part to calculate emissions. Start a transient test according to the standard-setting part, as follows:

(i) A cold-start transient cycle where you start to measure emissions just before starting an engine that has not been warmed up.

(ii) A hot-start transient cycle where you start to measure emissions just before starting a warmed-up engine.

(iii) A hot running transient cycle where you start to measure emissions after an engine is started, warmed up, and running.

(2) *Steady-state cycles.* Steady-state duty cycles are typically specified in the standard-setting part as a list of discrete operating points (modes or notches), where each operating point has one value of a normalized speed command and one value of a normalized torque (or power) command. Ramped-modal cycles for steady-state testing also list test times for each mode and transition times between modes where speed and torque are linearly ramped between modes, even for cycles with % power. Start a steady-state cycle as a hot running test, where you start to measure emissions after an engine is started, warmed up and running. Run a steady-state duty cycle as a discrete-mode cycle or a ramped-modal cycle, as follows:

(i) *Discrete-mode cycles.* Before emission sampling, stabilize an engine at the first discrete mode of the duty cycle specified in the standard-setting part. Sample emissions and other parameters for that mode in the same manner as a transient cycle, with the exception that reference speed and torque values are constant. Record data for that mode, transition to the next mode, and then stabilize the engine at the next mode. Continue to sample each mode discretely as a separate test interval and calculate composite brake-specific emission results according to § 1065.650(g)(2).

(A) Use good engineering judgment to determine the time required to stabilize the engine. You may make this determination before starting the test based on prior experience, or you may make this determination in real time based an automated stability criteria. If needed, you may continue to operate the engine after reaching stability to

get laboratory equipment ready for sampling.

(B) Collect PM on separate PM sample media for each mode.

(C) The minimum sample time is 60 seconds. We recommend that you sample both gaseous and PM emissions over the same test interval. If you sample gaseous and PM emissions over different test intervals, there must be no change in engine operation between the two test intervals. These two test intervals may completely or partially overlap, they may run consecutively, or they may be separated in time.

(ii) *Ramped-modal cycles.* Perform ramped-modal cycles similar to the way you would perform transient cycles, except that ramped-modal cycles involve mostly steady-state engine operation. Generate a ramped-modal duty cycle as a sequence of second-by-second (1 Hz) reference speed and torque points. Run the ramped-modal duty cycle in the same manner as a transient cycle and use the 1 Hz reference speed and torque values to validate the cycle, even for cycles with % power. Proportionally sample emissions and other parameters during the cycle and use the calculations in subpart G of this part to calculate emissions.

(d) Other subparts in this part identify how to select and prepare an engine for testing (subpart E), how to perform the required engine service accumulation (subpart E), and how to calculate emission results (subpart G).

(e) Subpart J of this part describes how to perform field testing.

[79 FR 23773, Apr. 28, 2014]

§ 1065.510 Engine mapping.

(a) *Applicability, scope, and frequency.* An engine map is a data set that consists of a series of paired data points that represent the maximum brake torque versus engine speed, measured at the engine's primary output shaft. Map your engine if the standard-setting part requires engine mapping to generate a duty cycle for your engine configuration. Map your engine while it is connected to a dynamometer or other device that can absorb work output from the engine's primary output shaft according to § 1065.110. To establish speed and torque values for mapping, we generally recommend that you stabilize an engine for at least 15 seconds at each setpoint and record the mean feedback speed and torque of the last (4 to 6) seconds. Configure any auxiliary work inputs and outputs such as hybrid, turbo-compounding, or thermoelectric systems to represent their in-use configurations, and use the same configuration for emission testing. See Figure 1 of § 1065.210. This may involve configuring initial states of charge and rates and times of auxiliary-work inputs and outputs. We recommend that you contact the Designated Compliance Officer before testing to determine how you should configure any auxiliary-work inputs and outputs. Use the most recent engine map to transform a normalized duty cycle from the standard-setting part to a reference duty cycle specific to your engine. Normalized duty cycles are specified in the standard-setting part. You may update an engine map at any time by repeating the engine-mapping procedure. You must map or re-map an engine before a test if any of the following apply:

(1) If you have not performed an initial engine map.

(2) If the atmospheric pressure near the engine's air inlet is not within ±5 kPa of the atmospheric pressure recorded at the time of the last engine map.

(3) If the engine or emission-control system has undergone changes that might affect maximum torque performance. This includes changing the configuration of auxiliary work inputs and outputs.

(4) If you capture an incomplete map on your first attempt or you do not complete a map within the specified time tolerance. You may repeat mapping as often as necessary to capture a complete map within the specified time.

(b) *Mapping variable-speed engines.* Map variable-speed engines as follows:

(1) Record the atmospheric pressure.

(2) Warm up the engine by operating it. We recommend operating the engine at any speed and at approximately 75% of its expected maximum power. Continue the warm-up until the engine coolant, block, or head absolute temperature is within ±2% of its mean

value for at least 2 min or until the engine thermostat controls engine temperature.

(3) Operate the engine at its warm idle speed as follows:

(i) For engines with a low-speed governor, set the operator demand to minimum, use the dynamometer or other loading device to target a torque of zero on the engine's primary output shaft, and allow the engine to govern the speed. Measure this warm idle speed; we recommend recording at least 30 values of speed and using the mean of those values.

(ii) For engines without a low-speed governor, operate the engine at warm idle speed and zero torque on the engine's primary output shaft. You may use the dynamometer to target a torque of zero on the engine's primary output shaft, and manipulate the operator demand to control the speed to target the manufacturer-declared value for the lowest engine speed possible with minimum load (also known as manufacturer-declared warm idle speed). You may alternatively use the dynamometer to target the manufacturer-declared warm idle speed and manipulate the operator demand to control the torque on the engine's primary output shaft to zero.

(iii) For variable-speed engines with or without a low-speed governor, if a nonzero idle torque is representative of in-use operation, you may use the dynamometer or operator demand to target the manufacturer-declared idle torque instead of targeting zero torque as specified in paragraphs (b)(3)(i) and (ii) of this section. Control speed as specified in paragraph (b)(3)(i) or (ii) of this section, as applicable. If you use this option for engines with a low-speed governor to measure the warm idle speed with the manufacturer-declared torque at this step, you may use this as the warm-idle speed for cycle generation as specified in paragraph (b)(6) of this section. However, if you identify multiple warm idle torques under paragraph (f)(4)(i) of this section, measure the warm idle speed at only one torque level for this paragraph (b)(3).

(4) Set operator demand to maximum and control engine speed at (95 ±1) % of its warm idle speed determined above for at least 15 seconds. For engines with reference duty cycles whose lowest speed is greater than warm idle speed, you may start the map at (95 ±1) % of the lowest reference speed.

(5) Perform one of the following:

(i) For any engine subject only to steady-state duty cycles, you may perform an engine map by using discrete speeds. Select at least 20 evenly spaced setpoints from 95% of warm idle speed to the highest speed above maximum power at which 50% of maximum power occurs. We refer to this 50% speed as the check point speed as described in paragraph (b)(5)(iii) of this section. At each setpoint, stabilize speed and allow torque to stabilize. Record the mean speed and torque at each setpoint. Use linear interpolation to determine intermediate speeds and torques. Use this series of speeds and torques to generate the power map as described in paragraph (e) of this section.

(ii) For any variable-speed engine, you may perform an engine map by using a continuous sweep of speed by continuing to record the mean feedback speed and torque at 1 Hz or more frequently and increasing speed at a constant rate such that it takes (4 to 6) min to sweep from 95% of warm idle speed to the check point speed as described in paragraph (b)(5)(iii) of this section. Use good engineering judgment to determine when to stop recording data to ensure that the sweep is complete. In most cases, this means that you can stop the sweep at any point after the power falls to 50% of the maximum value. From the series of mean speed and maximum torque values, use linear interpolation to determine intermediate values. Use this series of speeds and torques to generate the power map as described in paragraph (e) of this section.

(iii) The check point speed of the map is the highest speed above maximum power at which 50% of maximum power occurs. If this speed is unsafe or unachievable (*e.g.*, for ungoverned engines or engines that do not operate at that point), use good engineering judgment to map up to the maximum safe speed or maximum achievable speed. For discrete mapping, if the engine cannot be mapped to the check point speed, make sure the map includes at

least 20 points from 95% of warm idle to the maximum mapped speed. For continuous mapping, if the engine cannot be mapped to the check point speed, verify that the sweep time from 95% of warm idle to the maximum mapped speed is (4 to 6) min.

(iv) Note that under §1065.10(c)(1) we may allow you to disregard portions of the map when selecting maximum test speed if the specified procedure would result in a duty cycle that does not represent in-use operation.

(6) Use one of the following methods to determine warm high-idle speed for engines with a high-speed governor if they are subject to transient testing with a duty cycle that includes reference speed values above 100%:

(i) You may use a manufacturer-declared warm high-idle speed if the engine is electronically governed. For engines with a high-speed governor that shuts off torque output at a manufacturer-specified speed and reactivates at a lower manufacturer-specified speed (such as engines that use ignition cut-off for governing), declare the middle of the specified speed range as the warm high-idle speed.

(ii) Measure the warm high-idle speed using the following procedure:

(A) Set operator demand to maximum and use the dynamometer to target zero torque on the engine's primary output shaft. If the mean feedback torque is within ±1% of $T_{max\ mapped}$, you may use the observed mean feedback speed at that point as the measured warm high-idle speed.

(B) If the engine is unstable as a result of in-use production components (such as engines that use ignition cut-off for governing, as opposed to unstable dynamometer operation), you must use the mean feedback speed from paragraph (b)(6)(ii)(A) of this section as the measured warm high-idle speed. The engine is considered unstable if any of the 1 Hz speed feedback values are not within ±2% of the calculated mean feedback speed. We recommend that you determine the mean as the value representing the midpoint between the observed maximum and minimum recorded feedback speed.

(C) If your dynamometer is not capable of achieving a mean feedback torque within ±1% of $T_{max\ mapped}$, operate the engine at a second point with operator demand set to maximum with the dynamometer set to target a torque equal to the recorded mean feedback torque on the previous point plus 20% of $T_{max\ mapped}$. Use this data point and the data point from paragraph (b)(6)(ii)(A) of this section to extrapolate the engine speed where torque is equal to zero.

(D) You may use a manufacturer-declared T_{max} instead of the measured $T_{max\ mapped}$. If you do this, or if you are able to determine mean feedback speed as described in paragraphs (b)(6)(ii)(A) and (B) of this section, you may measure the warm high-idle speed before running the speed sweep specified in paragraph (b)(5) of this section.

(7) For engines with a low-speed governor, if a nonzero idle torque is representative of in-use operation, operate the engine at warm idle with the manufacturer-declared idle torque. Set the operator demand to minimum, use the dynamometer to target the declared idle torque, and allow the engine to govern the speed. Measure this speed and use it as the warm idle speed for cycle generation in §1065.512. We recommend recording at least 30 values of speed and using the mean of those values. If you identify multiple warm idle torques under paragraph (f)(4)(i) of this section, measure the warm idle speed at each torque. You may map the idle governor at multiple load levels and use this map to determine the measured warm idle speed at the declared idle torque(s).

(c) *Negative torque mapping*. If your engine is subject to a reference duty cycle that specifies negative torque values (*i.e.*, engine motoring), generate a motoring torque curve by any of the following procedures:

(1) Multiply the positive torques from your map by −40%. Use linear interpolation to determine intermediate values.

(2) Map the amount of negative torque required to motor the engine by repeating paragraph (b) of this section with minimum operator demand. You may start the negative torque map at either the minimum or maximum speed from paragraph (b) of this section.

(3) Determine the amount of negative torque required to motor the engine at the following two points near the ends of the engine's speed range. Operate the engine at these two points at minimum operator demand. Use linear interpolation to determine intermediate values.

(i) *Low-speed point*. For engines without a low-speed governor, determine the amount of negative torque at warm idle speed. For engines with a low-speed governor, motor the engine above warm idle speed so the governor is inactive and determine the amount of negative torque at that speed.

(ii) *High-speed point*. For engines without a high-speed governor, determine the amount of negative torque at the maximum safe speed or the maximum representative speed. For engines with a high-speed governor, determine the amount of negative torque at a speed at or above n_{hi} per §1065.610(c)(2).

(4) For engines with an electric hybrid system, map the negative torque required to motor the engine and absorb any power delivered from the RESS by repeating paragraph (g)(2) of this section with minimum operator demand, stopping the sweep to discharge the RESS when the absolute instantaneous power measured from the RESS drops below the expected maximum absolute power from the RESS by more than 2% of total system maximum power (including engine motoring and RESS power) as determined from mapping the negative torque.

(d) *Mapping constant-speed engines*. For constant-speed engines, generate a map as follows:

(1) Record the atmospheric pressure.

(2) Warm up the engine by operating it. We recommend operating the engine at approximately 75% of the engine's expected maximum power. Continue the warm-up until the engine coolant, block, or head absolute temperature is within ±2% of its mean value for at least 2 min or until the engine thermostat controls engine temperature.

(3) You may operate the engine with a production constant-speed governor or simulate a constant-speed governor by controlling engine speed with an operator demand control system described in §1065.110. Use either isochronous or speed-droop governor operation, as appropriate.

(4) With the governor or simulated governor controlling speed using operator demand, operate the engine at no-load governed speed (at high speed, not low idle) for at least 15 seconds.

(5) Record at 1 Hz the mean of feedback speed and torque. Use the dynamometer to increase torque at a constant rate. Unless the standard-setting part specifies otherwise, complete the map such that it takes (2 to 4) min to sweep from no-load governed speed to the speed below maximum mapped power at which the engine develops 90% of maximum mapped power. You may map your engine to lower speeds. Stop recording after you complete the sweep. Use this series of speeds and torques to generate the power map as described in paragraph (e) of this section.

(i) For constant-speed engines subject only to steady-state testing, you may perform an engine map by using a series of discrete torques. Select at least five evenly spaced torque setpoints from no-load to 80% of the manufacturer-declared test torque or to a torque derived from your published maximum power level if the declared test torque is unavailable. Starting at the 80% torque point, select setpoints in 2.5% or smaller intervals, stopping at the endpoint torque. The endpoint torque is defined as the first discrete mapped torque value greater than the torque at maximum observed power where the engine outputs 90% of the maximum observed power; or the torque when engine stall has been determined using good engineering judgment (*i.e.* sudden deceleration of engine speed while adding torque). You may continue mapping at higher torque setpoints. At each setpoint, allow torque and speed to stabilize. Record the mean feedback speed and torque at each setpoint. From this series of mean feedback speed and torque values, use linear interpolation to determine intermediate values. Use this series of mean feedback speeds and torques to generate the power map as described in paragraph (e) of this section.

(ii) For any constant-speed engine, you may perform an engine map with a continuous torque sweep by continuing

to record the mean feedback speed and torque at 1 Hz or more frequently. Use the dynamometer to increase torque. Increase the reference torque at a constant rate from no-load to the endpoint torque as defined in paragraph (d)(5)(i) of this section. You may continue mapping at higher torque setpoints. Unless the standard-setting part specifies otherwise, target a torque sweep rate equal to the manufacturer-declared test torque (or a torque derived from your published power level if the declared test torque is not known) divided by 180 seconds. Stop recording after you complete the sweep. Verify that the average torque sweep rate over the entire map is within ±7% of the target torque sweep rate. Use linear interpolation to determine intermediate values from this series of mean feedback speed and torque values. Use this series of mean feedback speeds and torques to generate the power map as described in paragraph (e) of this section.

(iii) For any isochronous governed (0% speed droop) constant-speed engine, you may map the engine with two points as described in this paragraph (d)(5)(iii). After stabilizing at the no-load governed speed in paragraph (d)(4) of this section, record the mean feedback speed and torque. Continue to operate the engine with the governor or simulated governor controlling engine speed using operator demand, and control the dynamometer to target a speed of 99.5% of the recorded mean no-load governed speed. Allow speed and torque to stabilize. Record the mean feedback speed and torque. Record the target speed. The absolute value of the speed error (the mean feedback speed minus the target speed) must be no greater than 0.1% of the recorded mean no-load governed speed. From this series of two mean feedback speed and torque values, use linear interpolation to determine intermediate values. Use this series of two mean feedback speeds and torques to generate a power map as described in paragraph (e) of this section. Note that the measured maximum test torque as determined in §1065.610 (b)(1) will be the mean feedback torque recorded on the second point.

(e) *Power mapping*. For all engines, create a power-versus-speed map by transforming torque and speed values to corresponding power values. Use the mean values from the recorded map data. Do not use any interpolated values. Multiply each torque by its corresponding speed and apply the appropriate conversion factors to arrive at units of power (kW). Interpolate intermediate power values between these power values, which were calculated from the recorded map data.

(f) *Measured and declared test speeds and torques*. You must select test speeds and torques for cycle generation as required in this paragraph (f). ''Measured'' values are either directly measured during the engine mapping process or they are determined from the engine map. ''Declared'' values are specified by the manufacturer. When both measured and declared values are available, you may use declared test speeds and torques instead of measured speeds and torques if they meet the criteria in this paragraph (f). Otherwise, you must use measured speeds and torques derived from the engine map.

(1) *Measured speeds and torques*. Determine the applicable speeds and torques for the duty cycles you will run:

(i) Measured maximum test speed for variable-speed engines according to §1065.610.

(ii) Measured maximum test torque for constant-speed engines according to §1065.610.

(iii) Measured ''A'', ''B'', and ''C'' speeds for variable-speed engines according to §1065.610.

(iv) Measured intermediate speed for variable-speed engines according to §1065.610.

(v) For variable-speed engines with a low-speed governor, measure warm idle speed according to §1065.510(b) and use this speed for cycle generation in §1065.512. For engines with no low-speed governor, instead use the manufacturer-declared warm idle speed.

(2) *Required declared speeds*. You must declare the lowest engine speed possible with minimum load (*i.e.*, manufacturer-declared warm idle speed). This is applicable only to variable-speed engines with no low-speed governor. For engines with no low-speed governor, the declared warm idle speed is used for cycle generation in

§ 1065.512. Declare this speed in a way that is representative of in-use operation. For example, if your engine is typically connected to an automatic transmission or a hydrostatic transmission, declare this speed at the idle speed at which your engine operates when the transmission is engaged.

(3) *Optional declared speeds.* You may use declared speeds instead of measured speeds as follows:

(i) You may use a declared value for maximum test speed for variable-speed engines if it is within (97.5 to 102.5) % of the corresponding measured value. You may use a higher declared speed if the length of the ''vector'' at the declared speed is within 2% of the length of the ''vector'' at the measured value. The term vector refers to the square root of the sum of normalized engine speed squared and the normalized full-load power (at that speed) squared, consistent with the calculations in § 1065.610.

(ii) You may use a declared value for intermediate, ''A'', ''B'', or ''C'' speeds for steady-state tests if the declared value is within (97.5 to 102.5)% of the corresponding measured value.

(iii) For electronically governed engines, you may use a declared warm high-idle speed for calculating the alternate maximum test speed as specified in § 1065.610.

(4) *Required declared torques.* If a nonzero idle or minimum torque is representative of in-use operation, you must declare the appropriate torque as follows:

(i) For variable-speed engines, declare a warm idle torque that is representative of in-use operation. For example, if your engine is typically connected to an automatic transmission or a hydrostatic transmission, declare the torque that occurs at the idle speed at which your engine operates when the transmission is engaged. Use this value for cycle generation. You may use multiple warm idle torques and associated idle speeds in cycle generation for representative testing. For example, for cycles that start the engine and begin with idle, you may start a cycle in idle with the transmission in neutral with zero torque and later switch to a different idle with the transmission in drive with the Curb-Idle Transmission Torque (CITT). For variable-speed engines intended primarily for propulsion of a vehicle with an automatic transmission where that engine is subject to a transient duty cycle with idle operation, you must declare a CITT. You must specify a CITT based on typical applications at the mean of the range of idle speeds you specify at stabilized temperature conditions.

(ii) For constant-speed engines, declare a warm minimum torque that is representative of in-use operation. For example, if your engine is typically connected to a machine that does not operate below a certain minimum torque, declare this torque and use it for cycle generation.

(5) *Optional declared torques.* (i) For variable-speed engines you may declare a maximum torque over the engine operating range. You may use the declared value for measuring warm high-idle speed as specified in this section.

(ii) For constant-speed engines you may declare a maximum test torque. You may use the declared value for cycle generation if it is within (95 to 100) % of the measured value.

(g) *Mapping variable-speed engines with an electric hybrid system.* Map variable-speed engines that include electric hybrid systems as described in this paragraph (g). You may ask to apply these provisions to other types of hybrid engines, consistent with good engineering judgment. However, do not use this procedure for engines used in hybrid vehicles where the hybrid system is certified as part of the vehicle rather than the engine. Follow the steps for mapping a variable-speed engine as given in paragraph (b)(5) of this section except as noted in this paragraph (g). You must generate one engine map with the hybrid system inactive as described in paragraph (g)(1) of this section, and a separate map with the hybrid system active as described in paragraph (g)(2) of this section. See the standard-setting part to determine how to use these maps. The map with the system inactive is typically used to generate steady-state duty cycles, but may also be used to generate transient cycles, such as those that do not involve engine motoring. This hybrid-inactive map is also used for generating

the hybrid-active map. The hybrid-active map is typically used to generate transient duty cycles that involve engine motoring.

(1) Prepare the engine for mapping by either deactivating the hybrid system or by operating the engine as specified in paragraph (b)(4) of this section and remaining at this condition until the rechargeable energy storage system (RESS) is depleted. Once the hybrid has been disabled or the RESS is depleted, perform an engine map as specified in paragraph (b)(5) of this section. If the RESS was depleted instead of deactivated, ensure that instantaneous power from the RESS remains less than 2% of the instantaneous measured power from the engine (or engine-hybrid system) at all engine speeds.

(2) The purpose of the mapping procedure in this paragraph (g) is to determine the maximum torque available at each speed, such as what might occur during transient operation with a fully charged RESS. Use one of the following methods to generate a hybrid-active map:

(i) Perform an engine map by using a series of continuous sweeps to cover the engine's full range of operating speeds. Prepare the engine for hybrid-active mapping by ensuring that the RESS state of charge is representative of normal operation. Perform the sweep as specified in paragraph (b)(5)(ii) of this section, but stop the sweep to charge the RESS when the power measured from the RESS drops below the expected maximum power from the RESS by more than 2% of total system power (including engine and RESS power). Unless good engineering judgment indicates otherwise, assume that the expected maximum power from the RESS is equal to the measured RESS power at the start of the sweep segment. For example, if the 3-second rolling average of total engine-RESS power is 200 kW and the power from the RESS at the beginning of the sweep segment is 50 kW, once the power from the RESS reaches 46 kW, stop the sweep to charge the RESS. Note that this assumption is not valid where the hybrid motor is torque-limited. Calculate total system power as a 3-second rolling average of instantaneous total system power. After each charging event, stabilize the engine for 15 seconds at the speed at which you ended the previous segment with operator demand set to maximum before continuing the sweep from that speed. Repeat the cycle of charging, mapping, and recharging until you have completed the engine map. You may shut down the system or include other operation between segments to be consistent with the intent of this paragraph (g)(2)(i). For example, for systems in which continuous charging and discharging can overheat batteries to an extent that affects performance, you may operate the engine at zero power from the RESS for enough time after the system is recharged to allow the batteries to cool. Use good engineering judgment to smooth the torque curve to eliminate discontinuities between map intervals.

(ii) Perform an engine map by using discrete speeds. Select map setpoints at intervals defined by the ranges of engine speed being mapped. From 95% of warm idle speed to 90% of the expected maximum test speed, select setpoints that result in a minimum of 13 equally spaced speed setpoints. From 90% to 110% of expected maximum test speed, select setpoints in equally spaced intervals that are nominally 2% of expected maximum test speed. Above 110% of expected maximum test speed, select setpoints based on the same speed intervals used for mapping from 95% warm idle speed to 90% maximum test speed. You may stop mapping at the highest speed above maximum power at which 50% of maximum power occurs. We refer to the speed at 50% power as the check point speed as described in paragraph (b)(5)(iii) of this section. Stabilize engine speed at each setpoint, targeting a torque value at 70% of peak torque at that speed without hybrid-assist. Make sure the engine is fully warmed up and the RESS state of charge is within the normal operating range. Snap the operator demand to maximum, operate the engine there for at least 10 seconds, and record the 3-second rolling average feedback speed and torque at 1 Hz or higher. Record the peak 3-second average torque and 3-second average speed at that point. Use linear interpolation to determine intermediate speeds and torques. Follow

§ 1065.610(a) to calculate the maximum test speed. Verify that the measured maximum test speed falls in the range from 92 to 108% of the estimated maximum test speed. If the measured maximum test speed does not fall in this range, rerun the map using the measured value of maximum test speed.

(h) *Other mapping procedures.* You may use other mapping procedures if you believe the procedures specified in this section are unsafe or unrepresentative for your engine. Any alternate techniques you use must satisfy the intent of the specified mapping procedures, which is to determine the maximum available torque at all engine speeds that occur during a duty cycle. Identify any deviations from this section's mapping procedures when you submit data to us.

[73 FR 37315, June 30, 2008, as amended at 73 FR 59330, Oct. 8, 2008; 75 FR 23042, Apr. 30, 2010; 76 FR 57448, Sept. 15, 2011; 79 FR 23773, Apr. 28, 2014; 81 FR 74169, Oct. 25, 2016]

EFFECTIVE DATE NOTE: At 86 FR 34545, June 29, 2021, § 1065.510 was amended, effective July 29, 2021.

§ 1065.512 Duty cycle generation.

(a) Generate duty cycles according to this section if the standard-setting part requires engine mapping to generate a duty cycle for your engine configuration. The standard-setting part generally defines applicable duty cycles in a normalized format. A normalized duty cycle consists of a sequence of paired values for speed and torque or for speed and power.

(b) Transform normalized values of speed, torque, and power using the following conventions:

(1) *Engine speed for variable-speed engines.* For variable-speed engines, normalized speed may be expressed as a percentage between warm idle speed, f_{nidle}, and maximum test speed, f_{ntest}, or speed may be expressed by referring to a defined speed by name, such as ''warm idle,'' ''intermediate speed,'' or ''A,'' ''B,'' or ''C'' speed. Section 1065.610 describes how to transform these normalized values into a sequence of reference speeds, f_{nref}. Running duty cycles with negative or small normalized speed values near warm idle speed may cause low-speed idle governors to activate and the engine torque to exceed the reference torque even though the operator demand is at a minimum. In such cases, we recommend controlling the dynamometer so it gives priority to follow the reference torque instead of the reference speed and let the engine govern the speed. Note that the cycle-validation criteria in § 1065.514 allow an engine to govern itself. This allowance permits you to test engines with enhanced-idle devices and to simulate the effects of transmissions such as automatic transmissions. For example, an enhanced-idle device might be an idle speed value that is normally commanded only under cold-start conditions to quickly warm up the engine and aftertreatment devices. In this case, negative and very low normalized speeds will generate reference speeds below this higher enhanced idle speed and we recommend controlling the dynamometer so it gives priority to follow the reference torque, controlling the operator demand so it gives priority to follow reference speed and let the engine govern the speed when the operator demand is at minimum.

(2) *Engine torque for variable-speed engines.* For variable-speed engines, normalized torque is expressed as a percentage of the mapped torque at the corresponding reference speed. Section 1065.610 describes how to transform normalized torques into a sequence of reference torques, T_{ref}. Section 1065.610 also describes special requirements for modifying transient duty cycles for variable-speed engines intended primarily for propulsion of a vehicle with an automatic transmission. Section 1065.610 also describes under what conditions you may command T_{ref} greater than the reference torque you calculated from a normalized duty cycle. This provision permits you to command T_{ref} values that are limited by a declared minimum torque. For any negative torque commands, command minimum operator demand and use the dynamometer to control engine speed to the reference speed, but if reference speed is so low that the idle governor activates, we recommend using the dynamometer to control torque to zero, CITT, or a declared minimum torque as appropriate. Note that you may omit

power and torque points during motoring from the cycle-validation criteria in § 1065.514. Also, use the maximum mapped torque at the minimum mapped speed as the maximum torque for any reference speed at or below the minimum mapped speed.

(3) *Engine torque for constant-speed engines.* For constant-speed engines, normalized torque is expressed as a percentage of maximum test torque, T_{test}. Section 1065.610 describes how to transform normalized torques into a sequence of reference torques, T_{ref}. Section 1065.610 also describes under what conditions you may command T_{ref} greater than the reference torque you calculated from the normalized duty cycle. This provision permits you to command T_{ref} values that are limited by a declared minimum torque.

(4) *Engine power.* For all engines, normalized power is expressed as a percentage of mapped power at maximum test speed, f_{ntest}, unless otherwise specified by the standard-setting part. Section 1065.610 describes how to transform these normalized values into a sequence of reference powers, P_{ref}. Convert these reference powers to corresponding torques for operator demand and dynamometer control. Use the reference speed associated with each reference power point for this conversion. As with cycles specified with % torque, issue torque commands more frequently and linearly interpolate between these reference torque values generated from cycles with % power.

(5) *Ramped-modal cycles.* For ramped-modal cycles, generate reference speed and torque values at 1 Hz and use this sequence of points to run the cycle and validate it in the same manner as with a transient cycle. During the transition between modes, linearly ramp the denormalized reference speed and torque values between modes to generate reference points at 1 Hz. Do not linearly ramp the normalized reference torque values between modes and then denormalize them. Do not linearly ramp normalized or denormalized reference power points. These cases will produce nonlinear torque ramps in the denormalized reference torques. If the speed and torque ramp runs through a point above the engine's torque curve, continue to command the reference torques and allow the operator demand to go to maximum. Note that you may omit power and either torque or speed points from the cycle-validation criteria under these conditions as specified in § 1065.514.

(c) For variable-speed engines, command reference speeds and torques sequentially to perform a duty cycle. Issue speed and torque commands at a frequency of at least 5 Hz for transient cycles and at least 1 Hz for steady-state cycles (*i.e.*, discrete-mode and ramped-modal). Linearly interpolate between the 1 Hz reference values specified in the standard-setting part to determine more frequently issued reference speeds and torques. During an emission test, record the feedback speeds and torques at a frequency of at least 5 Hz for transient cycles and at least 1 Hz for steady-state cycles. For transient cycles, you may record the feedback speeds and torques at lower frequencies (as low as 1 Hz) if you record the average value over the time interval between recorded values. Calculate the average values based on feedback values updated at a frequency of at least 5 Hz. Use these recorded values to calculate cycle-validation statistics and total work.

(d) For constant-speed engines, operate the engine with the same production governor you used to map the engine in § 1065.510 or simulate the in-use operation of a governor the same way you simulated it to map the engine in § 1065.510. Command reference torque values sequentially to perform a duty cycle. Issue torque commands at a frequency of at least 5 Hz for transient cycles and at least 1 Hz for steady-state cycles (*i.e.*, discrete-mode, ramped-modal). Linearly interpolate between the 1 Hz reference values specified in the standard-setting part to determine more frequently issued reference torque values. During an emission test, record the feedback speeds and torques at a frequency of at least 5 Hz for transient cycles and at least 1 Hz for steady-state cycles. For transient cycles, you may record the feedback speeds and torques at lower frequencies (as low as 1 Hz) if you record the average value over the time interval between recorded values. Calculate the

average values based on feedback values updated at a frequency of at least 5 Hz. Use these recorded values to calculate cycle-validation statistics and total work.

(e) You may perform practice duty cycles with the test engine to optimize operator demand and dynamometer controls to meet the cycle-validation criteria specified in § 1065.514.

[73 FR 37317, June 30, 2008, as amended at 79 FR 23774, Apr. 28, 2014]

EFFECTIVE DATE NOTE: At 86 FR 34546, June 29, 2021, § 1065.512 was amended, effective July 29, 2021.

§ 1065.514 Cycle-validation criteria for operation over specified duty cycles.

Validate the execution of your duty cycle according to this section unless the standard-setting part specifies otherwise. This section describes how to determine if the engine's operation during the test adequately matched the reference duty cycle. This section applies only to speed, torque, and power from the engine's primary output shaft. Other work inputs and outputs are not subject to cycle-validation criteria. You must compare the original reference duty cycle points generated as described in § 1065.512 to the corresponding feedback values recorded during the test. You may compare reference duty cycle points recorded during the test to the corresponding feedback values recorded during the test as long as the recorded reference values match the original points generated in § 1065.512. The number of points in the validation regression are based on the number of points in the original reference duty cycle generated in § 1065.512. For example if the original cycle has 1199 reference points at 1 Hz, then the regression will have up to 1199 pairs of reference and feedback values at the corresponding moments in the test. The feedback speed and torque signals may be filtered—either in real-time while the test is run or afterward in the analysis program. Any filtering that is used on the feedback signals used for cycle validation must also be used for calculating work. Feedback signals for control loops may use different filtering.

(a) *Testing performed by EPA.* Our tests must meet the specifications of paragraph (f) of this section, unless we determine that failing to meet the specifications is related to engine performance rather than to shortcomings of the dynamometer or other laboratory equipment.

(b) *Testing performed by manufacturers.* Emission tests that meet the specifications of paragraph (f) of this section satisfy the standard-setting part's requirements for duty cycles. You may ask to use a dynamometer or other laboratory equipment that cannot meet those specifications. We will approve your request as long as using the alternate equipment does not adversely affect your ability to show compliance with the applicable emission standards.

(c) *Time-alignment.* Because time lag between feedback values and the reference values may bias cycle-validation results, you may advance or delay the entire sequence of feedback engine speed and torque pairs to synchronize them with the reference sequence. If you advance or delay feedback signals for cycle validation, you must make the same adjustment for calculating work. You may use linear interpolation between successive recorded feedback signals to time shift an amount that is a fraction of the recording period.

(d) *Omitting additional points.* Besides engine cranking, you may omit additional points from cycle-validation statistics as described in the following table:

TABLE 1 OF § 1065.514—PERMISSIBLE CRITERIA FOR OMITTING POINTS FROM DUTY-CYCLE REGRESSION STATISTICS

When operator demand is at its . . .	you may omit . . .	if . . .
For reference duty cycles that are specified in terms of speed and torque (f_{nref}, T_{ref})		
minimum	power and torque	T_{ref} <0% (motoring).
minimum	power and speed	f_{nref} = 0% (idle speed) and T_{ref} = 0% (idle torque) and $T_{ref} - (2\% \cdot T_{max\ mapped}) < T < T_{ref} + (2\% \cdot T_{max\ mapped})$.

TABLE 1 OF § 1065.514—PERMISSIBLE CRITERIA FOR OMITTING POINTS FROM DUTY-CYCLE REGRESSION STATISTICS—Continued

When operator demand is at its . . .	you may omit . . .	if . . .
minimum	power and either torque or speed.	$f_n > f_{nref}$ or $T > T_{ref}$ but not if $f_n > (f_{nref} \cdot 102\%)$ and $T > T_{ref} \pm (2\% \cdot T_{max\ mapped})$.
maximum	power and either torque or speed.	$f_n < f_{nref}$ or $T < T_{ref}$ but not if $f_n < (f_{nref} \cdot 98\%)$ and $T < T_{ref} - (2\% \cdot T_{max\ mapped})$.
For reference duty cycles that are specified in terms of speed and power (f_{nref}, P_{ref})		
minimum	power and torque	$P_{ref} < 0\%$ (motoring).
minimum	power and speed	$f_{nref} = 0\%$ (idle speed) and $P_{ref} = 0\%$ (idle power) and $P_{ref} - (2\% \cdot P_{max\ mapped}) < P < P_{ref} + (2\% \cdot P_{max\ mapped})$.
minimum	power and either torque or speed.	$f_n > f_{nref}$ or $P > P_{ref}$ but not if $f_n > (f_{nref} \cdot 102\%)$ and $P > P_{ref} + (2\% \cdot P_{max\ mapped})$.
maximum	power and either torque or speed.	$f_n < f_{nref}$ or $P < P_{ref}$ but not if $f_n < (f_{nref} \cdot 98\%)$ and $P < P_{ref} - (2\% \cdot P_{max\ mapped})$.

(e) *Statistical parameters*. Use the remaining points to calculate regression statistics described in § 1065.602. Round calculated regression statistics to the same number of significant digits as the criteria to which they are compared. Refer to Table 2 of § 1065.514 for the default criteria and refer to the standard-setting part to determine if there are other criteria for your engine. Calculate the following regression statistics:

(1) Slopes for feedback speed, a_{1fn}, feedback torque, a_{1T}, and feedback power a_{1P}.

(2) Intercepts for feedback speed, a_{0fn}, feedback torque, a_{0T}, and feedback power a_{0P}.

(3) Standard estimates of error for feedback speed, SEE_{fn}, feedback torque, SEE_T, and feedback power SEE_P.

(4) Coefficients of determination for feedback speed, r^2_{fn}, feedback torque, r^2_T, and feedback power r^2_P.

(f) *Cycle-validation criteria*. Unless the standard-setting part specifies otherwise, use the following criteria to validate a duty cycle:

(1) For variable-speed engines, apply all the statistical criteria in Table 2 of this section.

(2) For constant-speed engines, apply only the statistical criteria for torque in Table 2 of this section.

(3) For discrete-mode steady-state testing, apply cycle-validation criteria by treating the sampling periods from the series of test modes as a continuous sampling period, analogous to ramped-modal testing and apply statistical criteria as described in paragraph (f)(1) or (f)(2) of this section. Note that if the gaseous and particulate test intervals are different periods of time, separate validations are required for the gaseous and particulate test intervals. Table 2 follows:

TABLE 2 OF § 1065.514—DEFAULT STATISTICAL CRITERIA FOR VALIDATING DUTY CYCLES

Parameter	Speed	Torque	Power
Slope, a_1	$0.950 \le a_1 \le 1.030$	$0.830 \le a_1 \le 1.030$	$0.830 \le a_1 \le 1.030$.
Absolute value of intercept, $\lvert a_0 \rvert$	≤10% of warm idle	≤2% of maximum mapped torque.	≤2% of maximum mapped power.
Standard error of estimate, *SEE*.	≤5% of maximum test speed	≤10% of maximum mapped torque.	≤10% of maximum mapped power.
Coefficient of determination, r^2	≥0.970	≥0.850	≥0.910.

[73 FR 37318, June 30, 2008, as amended at 73 FR 59330, Oct. 8, 2008; 75 FR 23042, Apr. 30, 2010; 76 FR 57450, Sept. 15, 2011]

EFFECTIVE DATE NOTE: At 86 FR 34546, June 29, 2021, § 1065.514 was amended, effective July 29, 2021.

§ 1065.516 Sample system decontamination and preconditioning.

This section describes how to manage the impact of sampling system contamination on emission measurements. Use good engineering judgment to determine if you should decontaminate and precondition your sampling system. Contamination occurs when a regulated pollutant accumulates in the sample system in a high enough concentration to cause release during emission tests. Hydrocarbons and PM are generally the only regulated pollutants that contaminate sample systems. Note that although this section focuses on avoiding excessive contamination of sampling systems, you must also use good engineering judgment to avoid loss of sample to a sampling system that is too clean. The goal of decontamination is not to perfectly clean the sampling system, but rather to achieve equilibrium between the sampling system and the exhaust so emission components are neither lost to nor entrained from the sampling system.

(a) You may perform contamination checks as follows to determine if decontamination is needed:

(1) For dilute exhaust sampling systems, measure hydrocarbon and PM emissions by sampling with the CVS dilution air turned on, without an engine connected to it.

(2) For raw analyzers and systems that collect PM samples from raw exhaust, measure hydrocarbon and PM emissions by sampling purified air or nitrogen.

(3) When calculating zero emission levels, apply all applicable corrections, including initial THC contamination and diluted (CVS) exhaust background corrections.

(4) Sampling systems are considered contaminated if either of the following conditions applies:

(i) The hydrocarbon emission level exceeds 2% of the flow-weighted mean concentration expected at the HC standard.

(ii) The PM emission level exceeds 5% of the level expected at the standard and exceeds 20 μg on a 47 mm PTFE membrane filter.

(b) To precondition or decontaminate sampling systems, use the following recommended procedure or select a different procedure using good engineering judgment:

(1) Start the engine and use good engineering judgment to operate it at a condition that generates high exhaust temperatures at the sample probe inlet.

(2) Operate any dilution systems at their expected flow rates. Prevent aqueous condensation in the dilution systems.

(3) Operate any PM sampling systems at their expected flow rates.

(4) Sample PM for at least 10 min using any sample media. You may change sample media at any time during this process and you may discard them without weighing them.

(5) You may purge any gaseous sampling systems that do not require decontamination during this procedure.

(6) You may conduct calibrations or verifications on any idle equipment or analyzers during this procedure.

(c) If your sampling system is still contaminated following the procedures specified in paragraph (b) of this section, you may use more aggressive procedures to decontaminate the sampling system, as long as the decontamination does not cause the sampling system to be cleaner than an equilibrium condition such that artificially low emission measurements may result.

[79 FR 23774, Apr. 28, 2014]

§ 1065.518 Engine preconditioning.

(a) This section applies for engines where measured emissions are affected by prior operation, such as with a diesel engine that relies on urea-based selective catalytic reduction. Note that § 1065.520(e) allows you to run practice duty cycles before the emission test; this section recommends how to do this for the purpose of preconditioning the engine. Follow the standard-setting part if it specifies a different engine preconditioning procedure.

(b) The intent of engine preconditioning is to manage the representativeness of emissions and emission controls over the duty cycle and to reduce bias.

(c) This paragraph (c) specifies the engine preconditioning procedures for

different types of duty cycles. You must identify the amount of preconditioning before starting to precondition. You must run the predefined amount of preconditioning. You may measure emissions during preconditioning. You may not abort an emission test sequence based on emissions measured during preconditioning. For confirmatory testing, you may ask us to run more preconditioning cycles than we specify in this paragraph (c); we will agree to this only if you show that additional preconditioning cycles are required to meet the intent of paragraph (b) of this section, for example, due to the effect of DPF regeneration on NH_3 storage in the SCR catalyst. Perform preconditioning as follows, noting that the specific cycles for preconditioning are the same ones that apply for emission testing:

(1) *Cold-start transient cycle.* Precondition the engine by running at least one hot-start transient cycle. We will precondition your engine by running two hot-start transient cycles. Immediately after completing each preconditioning cycle, shut down the engine and complete the engine-off soak period. Immediately after completing the last preconditioning cycle, shut down the engine and begin the cold soak as described in §1065.530(a)(1).

(2) *Hot-start transient cycle.* Precondition the engine by running at least one hot-start transient cycle. We will precondition your engine by running two hot-start transient cycles. Immediately after completing each preconditioning cycle, shut down the engine, then start the next cycle (including the emission test) as soon as practical. For any repeat cycles, start the next cycle within 60 seconds after completing the last preconditioning cycle (this is optional for manufacturer testing).

(3) *Hot-running transient cycle.* Precondition the engine by running at least one hot-running transient cycle. We will precondition your engine by running two hot-running transient cycles. Do not shut down the engine between cycles. Immediately after completing each preconditioning cycle, start the next cycle (including the emission test) as soon as practical. For any repeat cycles, start the next cycle within 60 seconds after completing the last preconditioning cycle (this is optional for manufacturer testing). See §1065.530(a)(1)(iii) for additional instructions if the cycle begins and ends under different operating conditions.

(4) *Discrete-mode cycle for steady-state testing.* Precondition the engine at the same operating condition as the next test mode, unless the standard-setting part specifies otherwise. We will precondition your engine by running it for at least five minutes before sampling.

(5) *Ramped-modal cycle for steady-state testing.* Precondition the engine by running at least the second half of the ramped-modal cycle, based on the number of test modes. For example, for the five-mode cycle specified in 40 CFR 1039.505(b)(1), the second half of the cycle consists of modes three through five. We will precondition your engine by running one complete ramped-modal cycle. Do not shut down the engine between cycles. Immediately after completing each preconditioning cycle, start the next cycle (including the emission test) as soon as practical. For any repeat cycles, start the next cycle within 60 seconds after completing the last preconditioning cycle. See §1065.530(a)(1)(iii) for additional instructions if the cycle begins and ends under different operating conditions.

(d) You may conduct calibrations or verifications on any idle equipment or analyzers during engine preconditioning.

[79 FR 23774, Apr. 28, 2014]

§1065.520 Pre-test verification procedures and pre-test data collection.

(a) For tests in which you measure PM emissions, follow the procedures for PM sample preconditioning and tare weighing according to §1065.590.

(b) Unless the standard-setting part specifies different tolerances, verify at some point before the test that ambient conditions are within the tolerances specified in this paragraph (b). For purposes of this paragraph (b), ''before the test'' means any time from a point just prior to engine starting (excluding engine restarts) to the point at which emission sampling begins.

(1) Ambient temperature of (20 to 30) °C. See §1065.530(j) for circumstances under which ambient temperatures

must remain within this range during the test.

(2) Atmospheric pressure of (80.000 to 103.325) kPa and within ±5 kPa of the value recorded at the time of the last engine map. You are not required to verify atmospheric pressure prior to a hot start test interval for testing that also includes a cold start.

(3) Dilution air conditions as specified in §1065.140, except in cases where you preheat your CVS before a cold start test. We recommend verifying dilution air conditions just prior to the start of each test interval.

(c) You may test engines at any intake-air humidity, and we may test engines at any intake-air humidity.

(d) Verify that auxiliary-work inputs and outputs are configured as they were during engine mapping, as described in §1065.510(a).

(e) You may perform a final calibration of the speed, torque, and proportional-flow control systems, which may include performing practice duty cycles (or portions of duty cycles). This may be done in conjunction with the preconditioning in §1065.518.

(f) Verify the amount of nonmethane hydrocarbon contamination in the exhaust and background HC sampling systems within 8 hours before the start of the first test interval of each duty-cycle sequence for laboratory tests. You may verify the contamination of a background HC sampling system by reading the last bag fill and purge using zero gas. For any NMHC measurement system that involves separately measuring CH_4 and subtracting it from a THC measurement or for any CH_4 measurement system that uses an NMC, verify the amount of THC contamination using only the THC analyzer response. There is no need to operate any separate CH_4 analyzer for this verification; however, you may measure and correct for THC contamination in the CH_4 sample path for the cases where NMHC is determined by subtracting CH_4 from THC or, where CH_4 is determined, using an NMC as configured in §1065.365(d), (e), and (f); and using the calculations in §1065.660(b)(2). Perform this verification as follows:

(1) Select the HC analyzer range for measuring the flow-weighted mean concentration expected at the HC standard.

(2) Zero the HC analyzer at the analyzer zero or sample port. Note that FID zero and span balance gases may be any combination of purified air or purified nitrogen that meets the specifications of §1065.750. We recommend FID analyzer zero and span gases that contain approximately the flow-weighted mean concentration of O_2 expected during testing.

(3) Span the HC analyzer using span gas introduced at the analyzer span or sample port. Span on a carbon number basis of one (C_1). For example, if you use a C_3H_8 span gas of concentration 200 μmol/mol, span the FID to respond with a value of 600 μmol/mol.

(4) Overflow zero gas at the HC probe inlet or into a tee near the probe outlet.

(5) Measure the THC concentration in the sampling and background systems as follows:

(i) For continuous sampling, record the mean THC concentration as overflow zero gas flows.

(ii) For batch sampling, fill the sample medium (e.g., bag) and record its mean THC concentration.

(iii) For the background system, record the mean THC concentration of the last fill and purge.

(6) Record this value as the initial THC concentration, $x_{THC[THC\text{-}FID]init}$, and use it to correct measured values as described in §1065.660.

(7) You may correct the measured initial THC concentration for drift as follows:

(i) For batch and continuous HC analyzers, after determining the initial THC concentration, flow zero gas to the analyzer zero or sample port. When the analyzer reading is stable, record the mean analyzer value.

(ii) Flow span gas to the analyzer span or sample port. When the analyzer reading is stable, record the mean analyzer value.

(iii) Use mean analyzer values from paragraphs (f)(2), (f)(3), (f)(7)(i), and (f)(7)(ii) of this section to correct the initial THC concentration recorded in paragraph (f)(6) of this section for drift, as described in §1065.550.

(8) If any of the $x_{THC[THC\text{-}FID]init}$ values exceed the greatest of the following

values, determine the source of the contamination and take corrective action, such as purging the system during an additional preconditioning cycle or replacing contaminated portions:

(i) 2% of the flow-weighted mean concentration expected at the HC (THC or NMHC) standard.

(ii) 2% of the flow-weighted mean concentration of HC (THC or NMHC) measured during testing.

(iii) 2 μmol/mol.

(9) If corrective action does not resolve the deficiency, you may request to use the contaminated system as an alternate procedure under § 1065.10.

[79 FR 23775, Apr. 28, 2014]

§ 1065.525 Engine starting, restarting, and shutdown.

(a) For test intervals that require emission sampling during engine starting, start the engine using one of the following methods:

(1) Start the engine as recommended in the owners manual using a production starter motor or air-start system and either an adequately charged battery, a suitable power supply, or a suitable compressed air source.

(2) Use the dynamometer to start the engine. To do this, motor the engine within ±25% of its typical in-use cranking speed. Stop cranking within 1 second of starting the engine.

(3) In the case of hybrid engines, activate the system such that the engine will start when its control algorithms determine that the engine should provide power instead of or in addition to power from the RESS. Unless we specify otherwise, engine starting throughout this part generally refers to this step of activating the system on hybrid engines, whether or not that causes the engine to start running.

(b) If the engine does not start after 15 seconds of cranking, stop cranking and determine why the engine failed to start, unless the owners manual or the service-repair manual describes the longer cranking time as normal.

(c) Respond to engine stalling with the following steps:

(1) If the engine stalls during warm-up before emission sampling begins, restart the engine and continue warm-up.

(2) If the engine stalls during preconditioning before emission sampling begins, restart the engine and restart the preconditioning sequence.

(3) Void the entire test if the engine stalls at any time after emission sampling begins, except as described in § 1065.526. If you do not void the entire test, you must void the individual test mode or test interval in which the engine stalls.

(d) Shut down the engine according to the manufacturer's specifications.

[73 FR 37320, June 30, 2008, as amended at 75 FR 68463, Nov. 8, 2010; 76 FR 57451, Sept. 15, 2011]

§ 1065.526 Repeating of void modes or test intervals.

(a) Test modes and test intervals can be voided because of instrument malfunction, engine stalling, emissions exceeding instrument ranges, and other unexpected deviations from the specified procedures. This section specifies circumstances for which a test mode or test interval can be repeated without repeating the entire test.

(b) This section is intended to result in replicate test modes and test intervals that are identical to what would have occurred if the cause of the voiding had not occurred. It does not allow you to repeat test modes or test intervals in any circumstances that would be inconsistent with good engineering judgment. For example, the procedures specified here for repeating a mode or interval may not apply for certain engines that include hybrid energy storage features or emission controls that involve physical or chemical storage of pollutants. This section applies for circumstances in which emission concentrations exceed the analyzer range only if it is due to operator error or analyzer malfunction. It does not apply for circumstances in which the emission concentrations exceed the range because they were higher than expected.

(c) If one of the modes of a discrete-mode duty cycle is voided while running the duty cycle as provided in this section, you may void the results for that individual mode and continue the duty cycle as follows:

(1) If the engine has stalled or been shut down, restart the engine.

(2) Use good engineering judgment to restart the duty cycle using the appropriate steps in § 1065.530(b).

(3) Stabilize the engine by operating it at the mode at which the duty cycle was interrupted and continue with the duty cycle as specified in the standard-setting part.

(d) If an individual mode of a discrete-mode duty cycle sequence is voided after running the full duty cycle, you may void results for that mode and repeat testing for that mode as follows:

(1) Use good engineering judgment to restart the test sequence using the appropriate steps in § 1065.530(b).

(2) Stabilize the engine by operating it at that mode.

(3) Sample emissions over an appropriate test interval.

(4) If you sampled gaseous and PM emissions over separate test intervals for a voided mode, you must void both test intervals and repeat sampling of both gaseous and PM emissions for that mode.

(e) If a transient or ramped-modal cycle test interval is voided as provided in this section, you may repeat the test interval as follows:

(1) Use good engineering judgment to restart (as applicable) and precondition the engine to the same condition as would apply for normal testing. This may require you to complete the voided test interval. For example, you may generally repeat a hot-start test of a heavy-duty highway engine after completing the voided hot-start test and allowing the engine to soak for 20 minutes.

(2) Complete the remainder of the test according to the provisions in this subpart.

(f) Keep records from the voided test mode or test interval in the same manner as required for unvoided tests.

[79 FR 23776, Apr. 28, 2014]

§ 1065.530 Emission test sequence.

(a) Time the start of testing as follows:

(1) Perform one of the following if you precondition the engine as described in § 1065.518:

(i) For cold-start duty cycles, shut down the engine. Unless the standard-setting part specifies that you may only perform a natural engine cooldown, you may perform a forced engine cooldown. Use good engineering judgment to set up systems to send cooling air across the engine, to send cool oil through the engine lubrication system, to remove heat from coolant through the engine cooling system, and to remove heat from any exhaust aftertreatment systems. In the case of a forced aftertreatment cooldown, good engineering judgment would indicate that you not start flowing cooling air until the aftertreatment system has cooled below its catalytic activation temperature. For platinum-group metal catalysts, this temperature is about 200 °C. Once the aftertreatment system has naturally cooled below its catalytic activation temperature, good engineering judgment would indicate that you use clean air with a temperature of at least 15 °C, and direct the air through the aftertreatment system in the normal direction of exhaust flow. Do not use any cooling procedure that results in unrepresentative emissions (see § 1065.10(c)(1)). You may start a cold-start duty cycle when the temperatures of an engine's lubricant, coolant, and aftertreatment systems are all between (20 and 30) °C.

(ii) For hot-start emission measurements, shut down the engine immediately after completing the last preconditioning cycle. For any repeat cycles, start the hot-start transient emission test within 60 seconds after completing the last preconditioning cycle (this is optional for manufacturer testing).

(iii) For testing that involves hot-stabilized emission measurements, such as any steady-state testing with a ramped-modal cycle, start the hot-stabilized emission test within 60 seconds after completing the last preconditioning cycle (the time between cycles is optional for manufacturer testing). If the hot-stabilized cycle begins and ends with different operating conditions, add a linear transition period of 20 seconds between hot-stabilized cycles where you linearly ramp the (denormalized) reference speed and torque values over the transition period. See § 1065.501(c)(2)(i) for discrete-mode cycles.

(2) If you do not precondition the engine as described in §1065.518, perform one of the following:

(i) For cold-start duty cycles, prepare the engine according to paragraph (a)(1)(i) of this section.

(ii) For hot-start duty cycles, first operate the engine at any speed above peak-torque speed and at (65 to 85) % of maximum mapped power until either the engine coolant, block, or head absolute temperature is within ±2% of its mean value for at least 2 min or until the engine thermostat controls engine temperature. Shut down the engine. Start the duty cycle within 20 min of engine shutdown.

(iii) For testing that involves hot-stabilized emission measurements, bring the engine either to warm idle or the first operating point of the duty cycle. Start the test within 10 min of achieving temperature stability. Determine temperature stability either as the point at which the engine coolant, block, or head absolute temperature is within ±2% of its mean value for at least 2 min, or as the point at which the engine thermostat controls engine temperature.

(b) Take the following steps before emission sampling begins:

(1) For batch sampling, connect clean storage media, such as evacuated bags or tare-weighed filters.

(2) Start all measurement instruments according to the instrument manufacturer's instructions and using good engineering judgment.

(3) Start dilution systems, sample pumps, cooling fans, and the data-collection system.

(4) Pre-heat or pre-cool heat exchangers in the sampling system to within their operating temperature tolerances for a test.

(5) Allow heated or cooled components such as sample lines, filters, chillers, and pumps to stabilize at their operating temperatures.

(6) Verify that there are no significant vacuum-side leaks according to §1065.345.

(7) Adjust the sample flow rates to desired levels, using bypass flow, if desired.

(8) Zero or re-zero any electronic integrating devices, before the start of any test interval.

(9) Select gas analyzer ranges. You may automatically or manually switch gas analyzer ranges during a test only if switching is performed by changing the span over which the digital resolution of the instrument is applied. During a test you may not switch the gains of an analyzer's analog operational amplifier(s).

(10) Zero and span all continuous analyzers using NIST-traceable gases that meet the specifications of §1065.750. Span FID analyzers on a carbon number basis of one (1), C_1. For example, if you use a C_3H_8 span gas of concentration 200 μmol/mol, span the FID to respond with a value of 600 μmol/mol. Span FID analyzers consistent with the determination of their respective response factors, *RF*, and penetration fractions, *PF*, according to §1065.365.

(11) We recommend that you verify gas analyzer responses after zeroing and spanning by sampling a calibration gas that has a concentration near one-half of the span gas concentration. Based on the results and good engineering judgment, you may decide whether or not to re-zero, re-span, or re-calibrate a gas analyzer before starting a test.

(12) Drain any accumulated condensate from the intake air system before starting a duty cycle, as described in §1065.125(e)(1). If engine and aftertreatment preconditioning cycles are run before the duty cycle, treat the preconditioning cycles and any associated soak period as part of the duty cycle for the purpose of opening drains and draining condensate. Note that you must close any intake air condensate drains that are not representative of those normally open during in-use operation.

(c) Start and run each test interval as described in this paragraph (c). The procedure varies depending on whether the test interval is part of a discrete-mode cycle, and whether the test interval includes engine starting. Note that the standard-setting part may apply different requirements for running test intervals. For example, 40 CFR part 1033 specifies a different way to perform discrete-mode testing.

(1) For steady-state discrete-mode duty cycles, start the duty cycle with

the engine warmed-up and running as described in § 1065.501(c)(2)(i). Run each mode in the sequence specified in the standard-setting part. This will require controlling engine speed, engine load, or other operator demand settings as specified in the standard-setting part. Simultaneously start any electronic integrating devices, continuous data recording, and batch sampling. We recommend that you stabilize the engine for at least 5 minutes for each mode. Once sampling begins, sample continuously for at least 1 minute. Note that longer sample times may be needed for accurately measuring very low emission levels.

(2) For transient and steady-state ramped-modal duty cycles that do not include engine starting, start the test interval with the engine running as soon as practical after completing engine preconditioning. Simultaneously start any electronic integrating devices, continuous data recording, batch sampling, and execution of the duty cycle.

(3) If engine starting is part of the test interval, simultaneously start any electronic integrating devices, continuous data recording, and batch sampling before attempting to start the engine. Initiate the sequence of points in the duty cycle when the engine starts.

(4) For batch sampling systems, you may advance or delay the start and end of sampling at the beginning and end of the test interval to improve the accuracy of the batch sample, consistent with good engineering judgment.

(d) At the end of each test interval, continue to operate all sampling and dilution systems to allow the sampling system's response time to elapse. Then stop all sampling and recording, including the recording of background samples. Finally, stop any integrating devices and indicate the end of the duty cycle in the recorded data.

(e) Shut down the engine if you have completed testing or if it is part of the duty cycle.

(f) If testing involves another duty cycle after a soak period with the engine off, start a timer when the engine shuts down, and repeat the steps in paragraphs (b) through (e) of this section as needed.

(g) Take the following steps after emission sampling is complete:

(1) For any proportional batch sample, such as a bag sample or PM sample, verify that proportional sampling was maintained according to § 1065.545. Void any samples that did not maintain proportional sampling according to § 1065.545.

(2) Place any used PM samples into covered or sealed containers and return them to the PM-stabilization environment. Follow the PM sample post-conditioning and total weighing procedures in § 1065.595.

(3) As soon as practical after the duty cycle is complete, or during the soak period if practical, perform the following:

(i) Zero and span all batch gas analyzers no later than 30 minutes after the duty cycle is complete, or during the soak period if practical.

(ii) Analyze any conventional gaseous batch samples no later than 30 minutes after the duty cycle is complete, or during the soak period if practical.

(iii) Analyze background samples no later than 60 minutes after the duty cycle is complete.

(iv) Analyze non-conventional gaseous batch samples, such as ethanol (NMHCE) as soon as practical using good engineering judgment.

(4) After quantifying exhaust gases, verify drift as follows:

(i) For batch and continuous gas analyzers, record the mean analyzer value after stabilizing a zero gas to the analyzer. Stabilization may include time to purge the analyzer of any sample gas, plus any additional time to account for analyzer response.

(ii) Record the mean analyzer value after stabilizing the span gas to the analyzer. Stabilization may include time to purge the analyzer of any sample gas, plus any additional time to account for analyzer response.

(iii) Use these data to validate and correct for drift as described in § 1065.550.

(h) Unless the standard-setting part specifies otherwise, determine whether or not the test meets the cycle-validation criteria in § 1065.514.

(1) If the criteria void the test, you may retest using the same

denormalized duty cycle, or you may re-map the engine, denormalize the reference duty cycle based on the new map and retest the engine using the new denormalized duty cycle.

(2) If the criteria void the test for a constant-speed engine only during commands of maximum test torque, you may do the following:

(i) Determine the first and last feedback speeds at which maximum test torque was commanded.

(ii) If the last speed is greater than or equal to 90% of the first speed, the test is void. You may retest using the same denormalized duty cycle, or you may re-map the engine, denormalize the reference duty cycle based on the new map and retest the engine using the new denormalized duty cycle.

(iii) If the last speed is less than 90% of the first speed, reduce maximum test torque by 5%, and proceed as follows:

(A) Denormalize the entire duty cycle based on the reduced maximum test torque according to § 1065.512.

(B) Retest the engine using the denormalized test cycle that is based on the reduced maximum test torque.

(C) If your engine still fails the cycle criteria, reduce the maximum test torque by another 5% of the original maximum test torque.

(D) If your engine fails after repeating this procedure four times, such that your engine still fails after you have reduced the maximum test torque by 20% of the original maximum test torque, notify us and we will consider specifying a more appropriate duty cycle for your engine under the provisions of § 1065.10(c).

(i) [Reserved]

(j) Measure and record ambient temperature, pressure, and humidity, as appropriate. For testing the following engines, you must record ambient temperature continuously to verify that it remains within the pre-test temperature range as specified in § 1065.520(b):

(1) Air-cooled engines.

(2) Engines equipped with auxiliary emission control devices that sense and respond to ambient temperature.

(3) Any other engine for which good engineering judgment indicates this is necessary to remain consistent with § 1065.10(c)(1).

[73 FR 37321, June 30, 2008, as amended at 75 FR 23043, Apr. 30, 2010; 76 FR 57451, Sept. 15, 2011; 79 FR 23776, Apr. 28, 2014]

EFFECTIVE DATE NOTE: At 86 FR 34546, June 29, 2021, § 1065.530 was amended, effective July 29, 2021.

§ 1065.543 Carbon balance error verification.

(a) Carbon balance error verification compares independently calculated quantities of carbon flowing into and out of an engine system. The engine system includes aftertreatment devices as applicable. Calculating carbon intake considers carbon-carrying streams flowing into the system, including intake air, fuel, and optionally DEF or other fluids. Carbon flow out of the system comes from exhaust emission calculations. Note that this verification is not valid if you calculate exhaust molar flow rate using fuel rate and chemical balance as described in § 1065.655(f)(3) because carbon flows into and out of the system are not independent. Use good engineering judgment to ensure that carbon mass in and carbon mass out data signals align.

(b) Perform the carbon balance error verification after emission sampling is complete for a test interval or duty cycle as described in § 1065.530(g). Testing must include measured values as needed to determine intake air, fuel flow, and carbon-related gaseous exhaust emissions. You may optionally account for the flow of carbon-carrying fluids other than intake air and fuel into the system. Perform carbon balance error verification as follows:

(1) Calculate carbon balance error quantities as described in § 1065.643. The three quantities for individual test intervals are carbon mass absolute error, ε_{aC}, carbon mass rate absolute error, ε_{aCrate}, and carbon mass relative error, ε_{rC}. Determine ε_{aC}, ε_{aCrate}, and ε_{rC} for all test intervals. You may determine composite carbon mass relative error, εrCcomp, as a fourth quantity that optionally applies for duty cycles with multiple test intervals.

(2) You meet verification criteria for an individual test interval if the absolute values of carbon balance error

quantities are at or below the following limit values:

(i) Calculate the carbon mass absolute error limit, $L\varepsilon_{aC}$, in grams to three decimal places for comparision to the absolute value of $\varepsilon_{\cong aC}$, using the following equation:

$$L_{\epsilon aC} = c \cdot P_{max}$$

Eq. 1065.543-1

Where:

c = power-specific carbon mass absolute error coefficient = 0.007 g/kW.

P_{max} = maximum power from the engine map generated according to §1065.510. If measured

P_{max} is not available, use a manufacturer-declared value for P_{max}.

Example:

c = 0.007 g/kW

P_{max} = 230.0 kW

$L_{\grave{o}aC}$ = 0.007 · 230.0 = 1.610 g

(ii) Calculate the carbon mass rate absolute error limit, $L\varepsilon_{aCrate}$, in grams per hour to three decimal places for comparison to the absolute value of ε_{aCrate}, using the following equation:

$$L_{\epsilon aCrate} = d \cdot P_{max}$$

Eq. 1065.543-2

Where:

d = power-specific carbon mass rate absolute error coefficient = 0.31 g/(kW · hr).

P_{max} = maximum power from the engine map generated according to §1065.510. If measured

P_{max} is not available, use a manufacturer-declared value for P_{max}.

Example:

d = 0.31 g/(kW·hr)

P_{max} = 230.0 kW

$L\varepsilon_{aCrate}$ = 71.300 g/hr

(iii) The carbon mass relative error limit,

$L\varepsilon_{rC}$, is 0.020 for comparision to the absolute value of ε_{rC}, and optionally the absolute value of ε_{rCcomp}.

(c) A failed carbon balance error verification might indicate one or more problems requiring corrective action, as follows:

TABLE 1 OF § 1065.543—TROUBLESHOOTING GUIDE FOR CARBON BALANCE ERROR VERIFICATION

Area of concern	Problem	Recommended corrective action
Gas analyzer system	Incorrect analyzer calibration	Calibrate NDIR and THC analyzers.
	Incorrect time alignment between flow and concentration data.	Determine transformation time, t_{50}, for continuous gas analyzers and time-align flow and concentration data as described in § 1065.650(c)(2)(i).
	Problems with the sample system	Inspect sample system components such as sample lines, filters, chillers, and pumps for leaks, operating temperature, and contamination.
Fuel flow measurement	Zero shift of fuel flow rate meter	Perform an in-situ zero adjustment.
	Change in fuel flow meter calibration	Calibrate the fuel flow meter as described in § 1065.320.
	Incorrect time alignment of fuel flow data	Verify alignment of carbon mass in and carbon mass out data streams.
	Short sampling periods	For test intervals with varying duration, such as discrete-mode steady-state duty cycles, make the test intervals longer to improve accuracy when measuring low fuel flow rates.
	Fluctuations in the fuel conditioning system	Improve stability of the fuel temperature and pressure conditioning system to improve accuracy when measuring low fuel flow rates.
Dilute testing using a CVS system	Leaks	Inspect exhaust system and CVS tunnel, connections, and fasteners. Repair or replace components as needed. A leak in the exhaust transfer tube to the CVS may result in negative values for carbon balance error.
	Poor mixing	Perform the verification related to mixing in § 1065.341(f).
	Change in CVS calibration	Calibrate the CVS flow meter as described in § 1065.340.
	Flow meter entrance effects	Inspect the CVS tunnel to determine whether entrance effects from the piping configuration upstream of the flow meter adversely affect flow measurement.
	Other problems with the CVS or sampling verification hardware or software.	Inspect hardware and software for the CVS system and CVS verification system for discrepancies.
Raw testing using intake air flow measurement or direct exhaust flow measurement.	Leaks	Inspect intake air and exhaust systems, connections, fasteners. Repair or replace components as needed.
	Zero shift of intake air flow rate meter	Perform an in-situ zero adjustment.
	Change in intake air flow meter calibration	Calibrate the intake air flow meter as described in § 1065.325.
	Zero shift of exhaust flow rate meter	Perform an in-situ zero adjustment.
	Change in exhaust flow meter calibration	Calibrate the exhaust flow meter as described in § 1065.330.
	Flow meter entrance effects	Inspect intake air and exhaust systems to determine whether entrance effects from the piping configuration upstream and downstream of the intake air flow meter or the exhaust flow meter adversely affect flow measurement.
	Other problems with the intake air flow and exhaust flow measurement hardware or software.	Look for discrepancies in the hardware and software for measuring intake air flow and exhaust flow.
	Poor mixing	Ensure that all streams are well mixed.
Accuracy of fluid properties	Inaccurate fluid properties	If defaults are used, use measured values. If measured values are used, verify fluid property determination.

EFFECTIVE DATE NOTE: At 86 FR 34547, June 29, 2021, § 1065.543 was added, effective July 29, 2021.

§ 1065.545 Verification of proportional flow control for batch sampling.

For any proportional batch sample such as a bag or PM filter, demonstrate that proportional sampling was maintained using one of the following, noting that you may omit up to 5% of the total number of data points as outliers:

(a) For any pair of flow rates, use recorded sample and total flow rates, where total flow rate means the raw exhaust flow rate for raw exhaust sampling and the dilute exhaust flow rate for CVS sampling, or their 1 Hz means with the statistical calculations in § 1065.602. Determine the standard error of the estimate, *SEE*, of the sample flow rate versus the total flow rate. For each test interval, demonstrate that *SEE* was less than or equal to 3.5% of the mean sample flow rate.

(b) For any pair of flow rates, use recorded sample and total flow rates, where total flow rate means the raw exhaust flow rate for raw exhaust sampling and the dilute exhaust flow rate for CVS sampling, or their 1 Hz means to demonstrate that each flow rate was constant within ±2.5% of its respective mean or target flow rate. You may use the following options instead of recording the respective flow rate of each type of meter:

(1) *Critical-flow venturi option.* For critical-flow venturis, you may use recorded venturi-inlet conditions or their 1 Hz means. Demonstrate that the flow density at the venturi inlet was constant within ±2.5% of the mean or target density over each test interval. For a CVS critical-flow venturi, you may demonstrate this by showing that the absolute temperature at the venturi inlet was constant within ±4% of the mean or target absolute temperature over each test interval.

(2) *Positive-displacement pump option.* You may use recorded pump-inlet conditions or their 1 Hz means. Demonstrate that the flow density at the pump inlet was constant within ±2.5% of the mean or target density over each test interval. For a CVS pump, you may demonstrate this by showing that the absolute temperature at the pump inlet was constant within ±2% of the mean or target absolute temperature over each test interval.

(c) Using good engineering judgment, demonstrate with an engineering analysis that the proportional-flow control system inherently ensures proportional sampling under all circumstances expected during testing. For example, you might use CFVs for both sample flow and total dilute exhaust (CVS) flow and demonstrate that they always have the same inlet pressures and temperatures and that they always operate under critical-flow conditions.

[79 FR 23777, Apr. 28, 2014]

EFFECTIVE DATE NOTE: At 86 FR 34548, June 29, 2021, § 1065.545 was amended, effective July 29, 2021.

§ 1065.546 Verification of minimum dilution ratio for PM batch sampling.

Use continuous flows and/or tracer gas concentrations for transient and ramped-modal cycles to verify the minimum dilution ratios for PM batch sampling as specified in § 1065.140(e)(2) over the test interval. You may use mode-average values instead of continuous measurements for discrete mode steady-state duty cycles. Determine the minimum primary and minimum overall dilution ratios using one of the following methods (you may use a different method for each stage of dilution):

(a) Determine minimum dilution ratio based on molar flow data. This involves determination of at least two of the following three quantities: raw exhaust flow (or previously diluted flow), dilution air flow, and dilute exhaust flow. You may determine the raw exhaust flow rate based on the measured intake air or fuel flow rate and the raw exhaust chemical balance terms as given in § 1065.655(f). You may determine the raw exhaust flow rate based on the measured intake air and dilute exhaust molar flow rates and the dilute exhaust chemical balance terms as given in § 1065.655(g). You may alternatively estimate the molar raw exhaust flow rate based on intake air, fuel rate measurements, and fuel properties, consistent with good engineering judgment.

(b) Determine minimum dilution ratio based on tracer gas (*e.g.*, CO_2)

concentrations in the raw (or previously diluted) and dilute exhaust corrected for any removed water.

(c) Use good engineering judgment to develop your own method of determining dilution ratios.

[75 FR 23043, Apr. 30, 2010, as amended at 76 FR 57451, Sept. 15, 2011; 79 FR 23778, Apr. 28, 2014; 81 FR 74169, Oct. 25, 2016]

§ 1065.550 Gas analyzer range verification and drift verification.

(a) *Range verification*. If an analyzer operated above 100% of its range at any time during the test, perform the following steps:

(1) For batch sampling, re-analyze the sample using the lowest analyzer range that results in a maximum instrument response below 100%. Report the result from the lowest range from which the analyzer operates below 100% of its range.

(2) For continuous sampling, repeat the entire test using the next higher analyzer range. If the analyzer again operates above 100% of its range, repeat the test using the next higher range. Continue to repeat the test until the analyzer always operates at less than 100% of its range.

(b) *Drift verification*. Gas analyzer drift verification is required for all gaseous exhaust constituents for which an emission standard applies. It is also required for CO_2 even if there is no CO_2 emission standard. It is not required for other gaseous exhaust constituents for which only a reporting requirement applies (such as CH_4 and N_2O).

(1) Verify drift using one of the following methods:

(i) For regulated exhaust constituents determined from the mass of a single component, perform drift verification based on the regulated constituent. For example, when NO_X mass is determined with a dry sample measured with a CLD and the removed water is corrected based on measured CO_2, CO, THC, and NO_X concentrations, you must verify the calculated NO_X value.

(ii) For regulated exhaust constituents determined from the masses of multiple subcomponents, perform the drift verification based on either the regulated constituent or all the mass subcomponents. For example, when NO_X is measured with separate NO and NO_2 analyzers, you must verify either the NO_X value or both the NO and NO_2 values.

(iii) For regulated exhaust constituents determined from the concentrations of multiple gaseous emission subcomponents prior to performing mass calculations, perform drift verification on the regulated constituent. You may not verify the concentration subcomponents (e.g., THC and CH_4 for NMHC) separately. For example, for NMHC measurements, perform drift verification on NMHC; do not verify THC and CH_4 separately.

(2) Drift verification requires two sets of emission calculations. For each set of calculations, include all the constituents in the drift verification. Calculate one set using the data before drift correction and calculate the other set after correcting all the data for drift according to § 1065.672. Note that for purposes of drift verification, you must leave unaltered any negative emission results over a given test interval (i.e., do not set them to zero). These unaltered results are used when verifying either test interval results or composite brake-specific emissions over the entire duty cycle for drift. For each constituent to be verified, both sets of calculations must include the following:

(i) Calculated mass (or mass rate) emission values over each test interval.

(ii) If you are verifying each test interval based on brake-specific values, calculate brake-specific emission values over each test interval.

(iii) If you are verifying over the entire duty cycle, calculate composite brake-specific emission values.

(3) The duty cycle is verified for drift if you satisfy the following criteria:

(i) For each regulated gaseous exhaust constituent, you must satisfy one of the following:

(A) For each test interval of the duty cycle, the difference between the uncorrected and the corrected brake-specific emission values of the regulated constituent must be within ±4% of the uncorrected value or the applicable emissions standard, whichever is greater. Alternatively, the difference between the uncorrected and the corrected emission mass (or mass rate)

values of the regulated constituent must be within ±4% of the uncorrected value or the composite work (or power) multiplied by the applicable emissions standard, whichever is greater. For purposes of verifying each test interval, you may use either the reference or actual composite work (or power).

(B) For each test interval of the duty cycle and for each mass subcomponent of the regulated constituent, the difference between the uncorrected and the corrected brake-specific emission values must be within ±4% of the uncorrected value. Alternatively, the difference between the uncorrected and the corrected emissions mass (or mass rate) values must be within ±4% of the uncorrected value.

(C) For the entire duty cycle, the difference between the uncorrected and the corrected composite brake-specific emission values of the regulated constituent must be within ±4% of the uncorrected value or applicable emission standard, whichever is greater.

(D) For the entire duty cycle and for each subcomponent of the regulated constituent, the difference between the uncorrected and the corrected composite brake-specific emission values must be within ±4% of the uncorrected value.

(ii) Where no emission standard applies for CO_2, you must satisfy one of the following:

(A) For each test interval of the duty cycle, the difference between the uncorrected and the corrected brake-specific CO_2 values must be within ±4% of the uncorrected value; or the difference between the uncorrected and the corrected CO_2 mass (or mass rate) values must be within ±4% of the uncorrected value.

(B) For the entire duty cycle, the difference between the uncorrected and the corrected composite brake-specific CO_2 values must be within ±4% of the uncorrected value.

(4) If the test is not verified for drift as described in paragraph (b)(1) of this section, you may consider the test results for the duty cycle to be valid only if, using good engineering judgment, the observed drift does not affect your ability to demonstrate compliance with the applicable emission standards. For example, if the drift-corrected value is less than the standard by at least two times the absolute difference between the uncorrected and corrected values, you may consider the data to be verified for demonstrating compliance with the applicable standard.

[79 FR 23778, Apr. 28, 2014]

§ 1065.590 PM sampling media (e.g., filters) preconditioning and tare weighing.

Before an emission test, take the following steps to prepare PM sampling media (e.g., filters) and equipment for PM measurements:

(a) Make sure the balance and PM-stabilization environments meet the periodic verifications in § 1065.390.

(b) Visually inspect unused sample media (e.g., filters) for defects and discard defective media.

(c) To handle PM sampling media (e.g., filters), use electrically grounded tweezers or a grounding strap, as described in § 1065.190.

(d) Place unused sample media (e.g., filters) in one or more containers that are open to the PM-stabilization environment. If you are using filters, you may place them in the bottom half of a filter cassette.

(e) Stabilize sample media (e.g., filters) in the PM-stabilization environment. Consider an unused sample medium stabilized as long as it has been in the PM-stabilization environment for a minimum of 30 min, during which the PM-stabilization environment has been within the specifications of § 1065.190.

(f) Weigh the sample media (e.g., filters) automatically or manually, as follows:

(1) For automatic weighing, follow the automation system manufacturer's instructions to prepare samples for weighing. This may include placing the samples in a special container.

(2) Use good engineering judgment to determine if substitution weighing is necessary to show that an engine meets the applicable standard. You may follow the substitution weighing procedure in paragraph (j) of this section, or you may develop your own procedure.

(g) Correct the measured mass of each sample medium (e.g., filter) for buoyancy as described in § 1065.690.

These buoyancy-corrected values are subsequently subtracted from the post-test mass of the corresponding sample media (e.g., filters) and collected PM to determine the mass of PM emitted during the test.

(h) You may repeat measurements to determine the mean mass of each sample medium (e.g., filter). Use good engineering judgment to exclude outliers from the calculation of mean mass values.

(i) If you use filters as sample media, load unused filters that have been tare-weighed into clean filter cassettes and place the loaded cassettes in a clean, covered or sealed container before removing them from the stabilization environment for transport to the test site for sampling. We recommend that you keep filter cassettes clean by periodically washing or wiping them with a compatible solvent applied using a lint-free cloth. Depending upon your cassette material, ethanol (C_2H_5OH) might be an acceptable solvent. Your cleaning frequency will depend on your engine's level of PM and HC emissions.

(j) Substitution weighing involves measurement of a reference weight before and after each weighing of the PM sampling medium (*e.g.*, the filter). While substitution weighing requires more measurements, it corrects for a balance's zero-drift and it relies on balance linearity only over a small range. This is most advantageous when quantifying net PM masses that are less than 0.1% of the sample medium's mass. However, it may not be advantageous when net PM masses exceed 1% of the sample medium's mass. If you utilize substitution weighing, it must be used for both pre-test and post-test weighing. The same substitution weight must be used for both pre-test and post-test weighing. Correct the mass of the substitution weight for buoyancy if the density of the substitution weight is less than 2.0 g/cm^3. The following steps are an example of substitution weighing:

(1) Use electrically grounded tweezers or a grounding strap, as described in § 1065.190.

(2) Use a static neutralizer as described in § 1065.190 to minimize static electric charge on any object before it is placed on the balance pan.

(3) Select and weigh a substitution weight that meets the requirements for calibration weights found in § 1065.790. The substitution weight must also have the same density as the weight you use to span the microbalance, and be similar in mass to an unused sample medium (*e.g.*, filter). A 47 mm PTFE membrane filter will typically have a mass in the range of 80 to 100 mg.

(4) Record the stable balance reading, then remove the substitution weight.

(5) Weigh an unused sample medium (*e.g.*, a new filter), record the stable balance reading and record the balance environment's dewpoint, ambient temperature, and atmospheric pressure.

(6) Reweigh the substitution weight and record the stable balance reading.

(7) Calculate the arithmetic mean of the two substitution-weight readings that you recorded immediately before and after weighing the unused sample. Subtract that mean value from the unused sample reading, then add the true mass of the substitution weight as stated on the substitution-weight certificate. Record this result. This is the unused sample's tare weight without correcting for buoyancy.

(8) Repeat these substitution-weighing steps for the remainder of your unused sample media.

(9) Once weighing is completed, follow the instructions given in paragraphs (g) through (i) of this section.

[73 FR 37323, June 30, 2008, as amended at 81 FR 74169, Oct. 25, 2016]

§ 1065.595 PM sample post-conditioning and total weighing.

After testing is complete, return the sample media (e.g., filters) to the weighing and PM-stabilization environments.

(a) Make sure the weighing and PM-stabilization environments meet the ambient condition specifications in § 1065.190(e)(1). If those specifications are not met, leave the test sample media (e.g., filters) covered until proper conditions have been met.

(b) In the PM-stabilization environment, remove PM samples from sealed containers. If you use filters, you may

remove them from their cassettes before or after stabilization. We recommend always removing the top portion of the cassette before stabilization. When you remove a filter from a cassette, separate the top half of the cassette from the bottom half using a cassette separator designed for this purpose.

(c) To handle PM samples, use electrically grounded tweezers or a grounding strap, as described in § 1065.190.

(d) Visually inspect the sampling media (e.g., filters) and collected particulate. If either the sample media (e.g., filters) or particulate sample appear to have been compromised, or the particulate matter contacts any surface other than the filter, the sample may not be used to determine particulate emissions. In the case of contact with another surface, clean the affected surface before continuing.

(e) To stabilize PM samples, place them in one or more containers that are open to the PM-stabilization environment, as described in § 1065.190. If you expect that a sample medium's (e.g., filter's) total surface concentration of PM will be less than 400 μg, assuming a 38 mm diameter filter stain area, expose the filter to a PM-stabilization environment meeting the specifications of § 1065.190 for at least 30 minutes before weighing. If you expect a higher PM concentration or do not know what PM concentration to expect, expose the filter to the stabilization environment for at least 60 minutes before weighing. Note that 400 μg on sample media (e.g., filters) is an approximate net mass of 0.07 g/kW · hr for a hot-start test with compression-ignition engines tested according to 40 CFR part 86, subpart N, or 50 mg/mile for light-duty vehicles tested according to 40 CFR part 86, subpart B.

(f) Repeat the procedures in § 1065.590(f) through (i) to determine post-test mass of the sample media (e.g., filters).

(g) Subtract each buoyancy-corrected tare mass of the sample medium (e.g., filter) from its respective buoyancy-corrected mass. The result is the net PM mass, m_{PM}. Use m_{PM} in emission calculations in § 1065.650.

[73 FR 37323, June 30, 2008]

Subpart G—Calculations and Data Requirements

§ 1065.601 Overview.

(a) This subpart describes how to—

(1) Use the signals recorded before, during, and after an emission test to calculate brake-specific emissions of each measured exhaust constituent.

(2) Perform calculations for calibrations and performance checks.

(3) Determine statistical values.

(b) You may use data from multiple systems to calculate test results for a single emission test, consistent with good engineering judgment. You may also make multiple measurements from a single batch sample, such as multiple weighings of a PM filter or multiple readings from a bag sample. Although you may use an average of multiple measurements from a single test, you may not use test results from multiple emission tests to report emissions.

(1) We allow weighted means where appropriate.

(2) You may discard statistical outliers, but you must report all results.

(3) For emission measurements related to durability testing, we may allow you to exclude certain test points other than statistical outliers relative to compliance with emission standards, consistent with good engineering judgment and normal measurement variability; however, you must include these results when calculating the deterioration factor. This would allow you to use durability data from an engine that has an intermediate test result above the standard that cannot be discarded as a statistical outlier, as long as good engineering judgment indicates that the test result does not represent the engine's actual emission level. Note that good engineering judgment would preclude you from excluding endpoints. Also, if normal measurement variability causes emission results below zero, include the negative result in calculating the deterioration factor to avoid an upward bias. These provisions related to durability testing are intended to address very stringent standards where measurement variability is large relative to the emission standard.

(c) You may use any of the following calculations instead of the calculations specified in this subpart G:

(1) Mass-based emission calculations prescribed by the International Organization for Standardization (ISO), according to ISO 8178, except the following:

(i) ISO 8178–1 Section 14.4, NO_X Correction for Humidity and Temperature. See §1065.670 for approved methods for humidity corrections.

(ii) ISO 8178–1 Section 15.1, Particulate Correction Factor for Humidity.

(2) Other calculations that you show are equivalent to within ±0.1% of the brake-specific emission results determined using the calculations specified in this subpart G.

[70 FR 40516, July 13, 2005, as amended at 73 FR 37324, June 30, 2008; 74 FR 56516, Oct. 30, 2009; 75 FR 23044, Apr. 30, 2010; 79 FR 23778, Apr. 28, 2014]

§ 1065.602 Statistics.

(a) *Overview*. This section contains equations and example calculations for statistics that are specified in this part. In this section we use the letter ''y'' to denote a generic measured quantity, the superscript over-bar ''–'' to denote an arithmetic mean, and the subscript ''$_{ref}$'' to denote the reference quantity being measured.

(b) *Arithmetic mean*. Calculate an arithmetic mean, $\bar{y}$, as follows:

$$\bar{y} = \frac{\sum_{i=1}^{N} y_i}{N} \qquad \text{Eq. 1065.602-1}$$

Example:
$N = 3$
$y_1 = 10.60$
$y_2 = 11.91$
$y_N = y_3 = 11.09$

$$\bar{y} = \frac{10.60 + 11.91 + 11.09}{3}$$

$\bar{y} = 11.20$

(c) *Standard deviation*. Calculate the standard deviation for a non-biased (e.g., N–1) sample, σ, as follows:

$$\sigma_y = \sqrt{\frac{\sum_{i=1}^{N} (y_i - \bar{y})^2}{(N-1)}} \qquad \text{Eq. 1065.602-2}$$

Example:
$N = 3$
$y_1 = 10.60$
$y_2 = 11.91$
$y_N = y_3 = 11.09$
$\bar{y} = 11.20$

$$\sigma_y = \sqrt{\frac{(10.60 - 11.2)^2 + (11.91 - 11.2)^2 + (11.09 - 11.2)^2}{2}}$$

$\sigma_y = 0.6619$

(d) *Root mean square*. Calculate a root mean square, rms_y, as follows:

$$\mathrm{rms_y} = \sqrt{\frac{1}{\mathrm{N}}\sum_{\mathrm{i=1}}^{\mathrm{N}} \mathrm{y_i}^2} \qquad \text{Eq. 1065.602-3}$$

Example:
$N = 3$
$y_1 = 10.60$
$y_2 = 11.91$
$y_N = y_3 = 11.09$

$$\mathrm{rms_y} = \sqrt{\frac{10.60 + 11.91^2 + 11.09^2}{3}}$$

$rms_y = 11.21$

(e) *Accuracy*. Determine accuracy as described in this paragraph (e). Make multiple measurements of a standard quantity to create a set of observed values, y_i, and compare each observed value to the known value of the standard quantity. The standard quantity may have a single known value, such as a gas standard, or a set of known values of negligible range, such as a known applied pressure produced by a calibration device during repeated applications. The known value of the standard quantity is represented by y_{ref_i}. If you use a standard quantity with a single value, y_{ref_i} would be constant. Calculate an accuracy value as follows:

$$accuracy = \left| \frac{1}{N}\sum_{\mathrm{i=1}}^{N}\left(y_{\mathrm{i}} - y_{\mathrm{ref_i}}\right) \right| \qquad \text{Eq. 1065.602-4}$$

Example:
$y_{ref} = 1800.0$
$N = 3$
$y_1 = 1806.4$
$y_2 = 1803.1$
$y_3 = 1798.9$

$$accuracy = \left| \frac{1}{3}((1806.4 - 1800.0) + (1803.1 - 1800.0) + (1798.9 - 1800.0)) \right|$$

$$accuracy = \left| \frac{1}{3}((6.4) + (3.1) + (-1.1)) \right|$$

$accuracy = 2.8$

(f) *t-test*. Determine if your data passes a *t*-test by using the following equations and tables:

(1) For an unpaired *t*-test, calculate the *t* statistic and its number of degrees of freedom, *v*, as follows:

$$t = \frac{\left|\overline{y}_{\text{ref}} - \overline{y}\right|}{\sqrt{\frac{\sigma_{\text{ref}}^2}{N_{\text{ref}}} + \frac{\sigma_{\text{y}}^2}{N}}}$$

Eq. 1065.602-5

$$v = \frac{\left(\frac{\sigma_{\text{ref}}^2}{N_{\text{ref}}} + \frac{\sigma_{\text{y}}^2}{N}\right)^2}{\frac{\left(\frac{\sigma_{\text{ref}}^2}{N_{\text{ref}}}\right)^2}{N_{\text{ref}} - 1} + \frac{\left(\frac{\sigma_{\text{y}}^2}{N}\right)^2}{N - 1}}$$

Eq. 1065.602-6

Example:

$\overline{y}_{\text{ref}} = 1205.3$

$\overline{y} = 1123.8$

$\sigma_{\text{ref}} = 9.399$

$\sigma_{\text{y}} = 10.583$

$N_{\text{ref}} = 11$

$N = 7$

$$t = \frac{\left|1205.3 - 1123.8\right|}{\sqrt{\frac{9.399^2}{11} + \frac{10.583^2}{7}}}$$

$t = 16.63$

(2) For a paired t-test, calculate the t statistic and its number of degrees of freedom, v, as follows, noting that the ε_i are the errors (*e.g.*, differences) between each pair of y_{refi} and y_i:

$\sigma_{ref} = 9.399$

$\sigma_y = 10.583$

$N_{ref} = 11$

$N = 7$

$$v = \frac{\left(\frac{9.399^2}{11} + \frac{10.583^2}{7}\right)^2}{\frac{\left(\frac{9.399^2}{11}\right)^2}{11-1} + \frac{\left(\frac{10.583^2}{7}\right)^2}{7-1}}$$

$v = 11.76$

(2) For a paired *t*-test, calculate the *t* statistic and its number of degrees of freedom, , as follows, noting that the ε_i are the errors (e.g., differences) between each pair of y_{refi} and y_i:

$$t = \frac{|\bar{\varepsilon}| \cdot \sqrt{N}}{\sigma_\varepsilon}$$

Eq. 1065.602-7

Example:

$\bar{\varepsilon} = -0.12580$

$N = 16$

$\sigma_\varepsilon = 0.04837$

$$t = \frac{|-0.12580| \cdot \sqrt{16}}{0.04837}$$

$t = 10.403$

$v = N - 1$

Example:

$N = 16$

$v = 16 - 1$

$v = 15$

(3) Use Table 1 of this section to compare t to the t_{crit} values tabulated versus the number of degrees of freedom. If t is less than t_{crit}, then t passes the t-test. The Microsoft Excel software has a TINV function that returns results equivalent results and may be used in place of Table 1, which follows:

TABLE 1 OF § 1065.602—CRITICAL t VALUES VERSUS NUMBER OF DEGREES OF FREEDOM, v[1]

v	Confidence	
	90%	95%
1	6.314	12.706
2	2.920	4.303
3	2.353	3.182
4	2.132	2.776
5	2.015	2.571
6	1.943	2.447
7	1.895	2.365
8	1.860	2.306
9	1.833	2.262
10	1.812	2.228
11	1.796	2.201
12	1.782	2.179
13	1.771	2.160
14	1.761	2.145
15	1.753	2.131
16	1.746	2.120
18	1.734	2.101
20	1.725	2.086

TABLE 1 OF § 1065.602—CRITICAL t VALUES VERSUS NUMBER OF DEGREES OF FREEDOM, v[1]—Continued

v	Confidence	
	90%	95%
22	1.717	2.074
24	1.711	2.064
26	1.706	2.056
28	1.701	2.048
30	1.697	2.042
35	1.690	2.030
40	1.684	2.021
50	1.676	2.009
70	1.667	1.994
100	1.660	1.984
1000 +	1.645	1.960

[1] Use linear interpolation to establish values not shown here.

(g) *F-test*. Calculate the F statistic as follows:

$$F_y = \frac{\sigma_y^2}{\sigma_{ref}^2} \qquad \text{Eq. 1065.602-8}$$

Example:

$$\sigma_y = \sqrt{\frac{\sum_{i=1}^{N}\left(y_i - \bar{y}\right)^2}{\left(N-1\right)}} = 10.583$$

$$\sigma_{ref} = \sqrt{\frac{\sum_{i=1}^{N_{ref}}\left(y_{refi} - \bar{y}_{ref}\right)^2}{\left(N_{ref}-1\right)}} = 9.399$$

$$F = \frac{10.583^2}{9.399^2}$$

$F = 1.268$

(1) For a 90% confidence F-test, use Table 2 of this section to compare F to the F_{crit90} values tabulated versus $(N-1)$ and $(N_{ref}-1)$. If F is less than F_{crit90}, then F passes the F-test at 90% confidence.

(2) For a 95% confidence F-test, use Table 3 of this section to compare F to the F_{crit95} values tabulated versus $(N-1)$ and $(N_{ref}-1)$. If F is less than F_{crit95}, then F passes the F-test at 95% confidence.

Table 2 of §1065.602–Critical F values, F_{crit90}, versus N-1 and N_{ref}-1 at 90 % confidence

N-1	1	2	3	4	5	6	7	8	9	10	12	15	20	24	30	40	60	120	1000+
N_{ref}-1																			
1	39.86	49.50	53.59	55.83	57.24	58.20	58.90	59.43	59.85	60.19	60.70	61.22	61.74	62.00	62.26	62.52	62.79	63.06	63.32
2	8.526	9.000	9.162	9.243	9.293	9.326	9.349	9.367	9.381	9.392	9.408	9.425	9.441	9.450	9.458	9.466	9.475	9.483	9.491
3	5.538	5.462	5.391	5.343	5.309	5.285	5.266	5.252	5.240	5.230	5.216	5.200	5.184	5.176	5.168	5.160	5.151	5.143	5.134
4	4.545	4.325	4.191	4.107	4.051	4.010	3.979	3.955	3.936	3.920	3.896	3.870	3.844	3.831	3.817	3.804	3.790	3.775	3.761
5	4.060	3.780	3.619	3.520	3.453	3.405	3.368	3.339	3.316	3.297	3.268	3.238	3.207	3.191	3.174	3.157	3.140	3.123	3.105
6	3.776	3.463	3.289	3.181	3.108	3.055	3.014	2.983	2.958	2.937	2.905	2.871	2.836	2.818	2.800	2.781	2.762	2.742	2.722
7	3.589	3.257	3.074	2.961	2.883	2.827	2.785	2.752	2.725	2.703	2.668	2.632	2.595	2.575	2.555	2.535	2.514	2.493	2.471
8	3.458	3.113	2.924	2.806	2.726	2.668	2.624	2.589	2.561	2.538	2.502	2.464	2.425	2.404	2.383	2.361	2.339	2.316	2.293
9	3.360	3.006	2.813	2.693	2.611	2.551	2.505	2.469	2.440	2.416	2.379	2.340	2.298	2.277	2.255	2.232	2.208	2.184	2.159
10	3.285	2.924	2.728	2.605	2.522	2.461	2.414	2.377	2.347	2.323	2.284	2.244	2.201	2.178	2.155	2.132	2.107	2.082	2.055
11	3.225	2.860	2.660	2.536	2.451	2.389	2.342	2.304	2.274	2.248	2.209	2.167	2.123	2.100	2.076	2.052	2.026	2.000	1.972
12	3.177	2.807	2.606	2.480	2.394	2.331	2.283	2.245	2.214	2.188	2.147	2.105	2.060	2.036	2.011	1.986	1.960	1.932	1.904
13	3.136	2.763	2.560	2.434	2.347	2.283	2.234	2.195	2.164	2.138	2.097	2.053	2.007	1.983	1.958	1.931	1.904	1.876	1.846
14	3.102	2.726	2.522	2.395	2.307	2.243	2.193	2.154	2.122	2.095	2.054	2.010	1.962	1.938	1.912	1.885	1.857	1.828	1.797
15	3.073	2.695	2.490	2.361	2.273	2.208	2.158	2.119	2.086	2.059	2.017	1.972	1.924	1.899	1.873	1.845	1.817	1.787	1.755
16	3.048	2.668	2.462	2.333	2.244	2.178	2.128	2.088	2.055	2.028	1.985	1.940	1.891	1.866	1.839	1.811	1.782	1.751	1.718
17	3.026	2.645	2.437	2.308	2.218	2.152	2.102	2.061	2.028	2.001	1.958	1.912	1.862	1.836	1.809	1.781	1.751	1.719	1.686
18	3.007	2.624	2.416	2.286	2.196	2.130	2.079	2.038	2.005	1.977	1.933	1.887	1.837	1.810	1.783	1.754	1.723	1.691	1.657
19	2.990	2.606	2.397	2.266	2.176	2.109	2.058	2.017	1.984	1.956	1.912	1.865	1.814	1.787	1.759	1.730	1.699	1.666	1.631
20	2.975	2.589	2.380	2.249	2.158	2.091	2.040	1.999	1.965	1.937	1.892	1.845	1.794	1.767	1.738	1.708	1.677	1.643	1.607
21	2.961	2.575	2.365	2.233	2.142	2.075	2.023	1.982	1.948	1.920	1.875	1.827	1.776	1.748	1.719	1.689	1.657	1.623	1.586
20	2.949	2.561	2.351	2.219	2.128	2.061	2.008	1.967	1.933	1.904	1.859	1.811	1.759	1.731	1.702	1.671	1.639	1.604	1.567
23	2.937	2.549	2.339	2.207	2.115	2.047	1.995	1.953	1.919	1.890	1.845	1.796	1.744	1.716	1.686	1.655	1.622	1.587	1.549
24	2.927	2.538	2.327	2.195	2.103	2.035	1.983	1.941	1.906	1.877	1.832	1.783	1.730	1.702	1.672	1.641	1.607	1.571	1.533
25	2.918	2.528	2.317	2.184	2.092	2.024	1.971	1.929	1.895	1.866	1.820	1.771	1.718	1.689	1.659	1.627	1.593	1.557	1.518
26	2.909	2.519	2.307	2.174	2.082	2.014	1.961	1.919	1.884	1.855	1.809	1.760	1.706	1.677	1.647	1.615	1.581	1.544	1.504
27	2.901	2.511	2.299	2.165	2.073	2.005	1.952	1.909	1.874	1.845	1.799	1.749	1.695	1.666	1.636	1.603	1.569	1.531	1.491
28	2.894	2.503	2.291	2.157	2.064	1.996	1.943	1.900	1.865	1.836	1.790	1.740	1.685	1.656	1.625	1.593	1.558	1.520	1.478
29	2.887	2.495	2.283	2.149	2.057	1.988	1.935	1.892	1.857	1.827	1.781	1.731	1.676	1.647	1.616	1.583	1.547	1.509	1.467
30	2.881	2.489	2.276	2.142	2.049	1.980	1.927	1.884	1.849	1.819	1.773	1.722	1.667	1.638	1.606	1.573	1.538	1.499	1.456
40	2.835	2.440	2.226	2.091	1.997	1.927	1.873	1.829	1.793	1.763	1.715	1.662	1.605	1.574	1.541	1.506	1.467	1.425	1.377
60	2.791	2.393	2.177	2.041	1.946	1.875	1.819	1.775	1.738	1.707	1.657	1.603	1.543	1.511	1.476	1.437	1.395	1.348	1.291
120	2.748	2.347	2.130	1.992	1.896	1.824	1.767	1.722	1.684	1.652	1.601	1.545	1.482	1.447	1.409	1.368	1.320	1.265	1.193
1000+	2.706	2.303	2.084	1.945	1.847	1.774	1.717	1.670	1.632	1.599	1.546	1.487	1.421	1.383	1.342	1.295	1.240	1.169	1.000

Table 3 of §1065.602–Critical F values, F_{crit95}, versus N-1 and N_{ref}-1 at 95 % confidence

N-1	1	2	3	4	5	6	7	8	9	10	12	15	20	24	30	40	60	120	1000+
N_{ref}-1																			
1	161.4	199.5	215.7	224.5	230.1	233.9	236.7	238.8	240.5	241.8	243.9	245.9	248.0	249.0	250.1	251.1	252.2	253.2	254.3
2	18.51	19.00	19.16	19.24	19.29	19.33	19.35	19.37	19.38	19.39	19.41	19.42	19.44	19.45	19.46	19.47	19.47	19.48	19.49
3	10.12	9.552	9.277	9.117	9.014	8.941	8.887	8.845	8.812	8.786	8.745	8.703	8.660	8.639	8.617	8.594	8.572	8.549	8.526
4	7.709	6.944	6.591	6.388	6.256	6.163	6.094	6.041	5.999	5.964	5.912	5.858	5.803	5.774	5.746	5.717	5.688	5.658	5.628
5	6.608	5.786	5.410	5.192	5.050	4.950	4.876	4.818	4.773	4.735	4.678	4.619	4.558	4.527	4.496	4.464	4.431	4.399	4.365
6	5.987	5.143	4.757	4.534	4.387	4.284	4.207	4.147	4.099	4.060	4.000	3.938	3.874	3.842	3.808	3.774	3.740	3.705	3.669
7	5.591	4.737	4.347	4.120	3.972	3.866	3.787	3.726	3.677	3.637	3.575	3.511	3.445	3.411	3.376	3.340	3.304	3.267	3.230
8	5.318	4.459	4.066	3.838	3.688	3.581	3.501	3.438	3.388	3.347	3.284	3.218	3.150	3.115	3.079	3.043	3.005	2.967	2.928
9	5.117	4.257	3.863	3.633	3.482	3.374	3.293	3.230	3.179	3.137	3.073	3.006	2.937	2.901	2.864	2.826	2.787	2.748	2.707
10	4.965	4.103	3.708	3.478	3.326	3.217	3.136	3.072	3.020	2.978	2.913	2.845	2.774	2.737	2.700	2.661	2.621	2.580	2.538
11	4.844	3.982	3.587	3.357	3.204	3.095	3.012	2.948	2.896	2.854	2.788	2.719	2.646	2.609	2.571	2.531	2.490	2.448	2.405
12	4.747	3.885	3.490	3.259	3.106	2.996	2.913	2.849	2.796	2.753	2.687	2.617	2.544	2.506	2.466	2.426	2.384	2.341	2.296
13	4.667	3.806	3.411	3.179	3.025	2.915	2.832	2.767	2.714	2.671	2.604	2.533	2.459	2.420	2.380	2.339	2.297	2.252	2.206
14	4.600	3.739	3.344	3.112	2.958	2.848	2.764	2.699	2.646	2.602	2.534	2.463	2.388	2.349	2.308	2.266	2.223	2.178	2.131
15	4.543	3.682	3.287	3.056	2.901	2.791	2.707	2.641	2.588	2.544	2.475	2.403	2.328	2.288	2.247	2.204	2.160	2.114	2.066
16	4.494	3.634	3.239	3.007	2.852	2.741	2.657	2.591	2.538	2.494	2.425	2.352	2.276	2.235	2.194	2.151	2.106	2.059	2.010
17	4.451	3.592	3.197	2.965	2.810	2.699	2.614	2.548	2.494	2.450	2.381	2.308	2.230	2.190	2.148	2.104	2.058	2.011	1.960
18	4.414	3.555	3.160	2.928	2.773	2.661	2.577	2.510	2.456	2.412	2.342	2.269	2.191	2.150	2.107	2.063	2.017	1.968	1.917
19	4.381	3.522	3.127	2.895	2.740	2.628	2.544	2.477	2.423	2.378	2.308	2.234	2.156	2.114	2.071	2.026	1.980	1.930	1.878
20	4.351	3.493	3.098	2.866	2.711	2.599	2.514	2.447	2.393	2.348	2.278	2.203	2.124	2.083	2.039	1.994	1.946	1.896	1.843
21	4.325	3.467	3.073	2.840	2.685	2.573	2.488	2.421	2.366	2.321	2.250	2.176	2.096	2.054	2.010	1.965	1.917	1.866	1.812
22	4.301	3.443	3.049	2.817	2.661	2.549	2.464	2.397	2.342	2.297	2.226	2.151	2.071	2.028	1.984	1.938	1.889	1.838	1.783
23	4.279	3.422	3.028	2.796	2.640	2.528	2.442	2.375	2.320	2.275	2.204	2.128	2.048	2.005	1.961	1.914	1.865	1.813	1.757
24	4.260	3.403	3.009	2.776	2.621	2.508	2.423	2.355	2.300	2.255	2.183	2.108	2.027	1.984	1.939	1.892	1.842	1.790	1.733
25	4.242	3.385	2.991	2.759	2.603	2.490	2.405	2.337	2.282	2.237	2.165	2.089	2.008	1.964	1.919	1.872	1.822	1.768	1.711
26	4.225	3.369	2.975	2.743	2.587	2.474	2.388	2.321	2.266	2.220	2.148	2.072	1.990	1.946	1.901	1.853	1.803	1.749	1.691
27	4.210	3.354	2.960	2.728	2.572	2.459	2.373	2.305	2.250	2.204	2.132	2.056	1.974	1.930	1.884	1.836	1.785	1.731	1.672
28	4.196	3.340	2.947	2.714	2.558	2.445	2.359	2.291	2.236	2.190	2.118	2.041	1.959	1.915	1.869	1.820	1.769	1.714	1.654
29	4.183	3.328	2.934	2.701	2.545	2.432	2.346	2.278	2.223	2.177	2.105	2.028	1.945	1.901	1.854	1.806	1.754	1.698	1.638
30	4.171	3.316	2.922	2.690	2.534	2.421	2.334	2.266	2.211	2.165	2.092	2.015	1.932	1.887	1.841	1.792	1.740	1.684	1.622
40	4.085	3.232	2.839	2.606	2.450	2.336	2.249	2.180	2.124	2.077	2.004	1.925	1.839	1.793	1.744	1.693	1.637	1.577	1.509
60	4.001	3.150	2.758	2.525	2.368	2.254	2.167	2.097	2.040	1.993	1.917	1.836	1.748	1.700	1.649	1.594	1.534	1.467	1.389
120	3.920	3.072	2.680	2.447	2.290	2.175	2.087	2.016	1.959	1.911	1.834	1.751	1.659	1.608	1.554	1.495	1.429	1.352	1.254
1000+	3.842	2.996	2.605	2.372	2.214	2.099	2.010	1.938	1.880	1.831	1.752	1.666	1.571	1.517	1.459	1.394	1.318	1.221	1.000

(h) *Slope*. Calculate a least-squares regression slope, a_{1y}, as follows:

$$a_{1y} = \frac{\sum_{i=1}^{N}(y_i - \bar{y}) \cdot \left(y_{refi} - \bar{y}_{ref}\right)}{\sum_{i=1}^{N}(y_{refi} - \bar{y}_{ref})^2}$$

Eq. 1065.602-9

Example:
$N = 6000$
$y_1 = 2045.8$
$\bar{y} = 1050.1$
$y_{ref\ 1} = 2045.0$
$\bar{y}_{ref} = 1055.3$

$$a_{1y} = \frac{\left(2045.8 - 1050.1\right) \cdot \left(2045.0 - 1055.3\right) + \ldots + \left(y_{6000} - 1050.1\right) \cdot \left(y_{ref6000} - 1055.3\right)}{\left(2045.0 - 1055.3\right)^2 + \ldots + \left(y_{ref6000} - 1055.3\right)^2}$$

$a_{1y} = 1.0110$

(i) *Intercept*. Calculate a least-squares regression intercept, a_{0y}, as follows:

$$a_{0y} = \bar{y} - \left(a_{1y} \cdot \bar{y}_{ref}\right) \qquad \text{Eq. 1065.602-10}$$

Example:
$\bar{y} = 1050.1$
$a_{1y} = 1.0110$
$\bar{y}_{ref} = 1055.3$
$a_{0y} = 1050.1 - (1.0110 \cdot 1055.3)$
$a_{0y} = -16.8083$

(j) *Standard estimate of error*. Calculate a standard estimate of error, *SEE*, as follows:

$$SEE_y = \sqrt{\frac{\sum_{i=1}^{N}\left[y_i - a_{0y} - (a_{1y} \cdot y_{refi})\right]^2}{N-2}}$$

Eq. 1065.602-11

Eq. 1065.602–11
Example:
$N = 6000$
$y_1 = 2045.8$
$a_{0y} = -16.8083$
$a_{1y} = 1.0110$
$y_{ref1} = 2045.0$

$$SEE_y = \sqrt{\frac{\left[2045.8 - (-16.8083) - (1.0110 \cdot 2045.0)\right]^2 + \ldots \left[y_{6000} - (-16.8083) - (1.0110 \cdot y_{ref\,6000})\right]^2}{6000 - 2}}$$

$SEE_y = 5.348$

(k) *Coefficient of determination.* Calculate a coefficient of determination, r^2, as follows:

$$r_y^2 = 1 - \frac{\sum_{i=1}^{N}\left[y_i - a_{0y} - \left(a_{1y} \cdot y_{refi}\right)\right]^2}{\sum_{i=1}^{N}\left[y_i - \bar{y}\right]^2} \qquad \text{Eq. 1065.602-12}$$

Example:
$N = 6000$
$y_1 = 2045.8$
$a_{0y} = -16.8083$
$a_{1y} = 1.0110$
$y_{refi} = 2045.0$
$\bar{y} = 1480.5$

$$r_y^2 = 1 - \frac{\left[2045.8 - (-16.8083) - (1.0110 \times 2045.0)\right]^2 + \ldots\left[y_{6000} - (-16.8083) - \left(1.0110 \cdot y_{ref6000}\right)\right]^2}{\left[2045.8 - 1480.5\right]^2 + \ldots\left[y_{6000} - 1480.5\right]^2}$$

$$r_y^2 = 0.9859$$

(l) *Flow-weighted mean concentration.* In some sections of this part, you may need to calculate a flow-weighted mean concentration to determine the applicability of certain provisions. A flow-weighted mean is the mean of a quantity after it is weighted proportional to a corresponding flow rate. For example, if a gas concentration is measured continuously from the raw exhaust of an engine, its flow-weighted mean concentration is the sum of the products of each recorded concentration times its respective exhaust molar flow rate, divided by the sum of the recorded flow rate values. As another example, the bag concentration from a CVS system is the same as the flow-weighted mean concentration because the CVS system itself flow-weights the bag concentration. You might already expect a certain flow-weighted mean concentration of an emission at its standard based on previous testing with similar engines or testing with similar equipment and instruments. If you need to estimate your expected flow-weighted mean concentration of an emission at its standard, we recommend using the following examples as a guide for how to estimate the flow-weighted mean concentration expected at the standard. Note that these examples are not exact and that they contain assumptions that are not always valid. Use good engineering judgment to determine if you can use similar assumptions.

(1) To estimate the flow-weighted mean raw exhaust NO_X concentration from a turbocharged heavy-duty compression-ignition engine at a NO_X standard of 2.5 g/(kW · hr), you may do the following:

(i) Based on your engine design, approximate a map of maximum torque versus speed and use it with the applicable normalized duty cycle in the standard-setting part to generate a reference duty cycle as described in §1065.610. Calculate the total reference work, W_{ref}, as described in §1065.650. Divide the reference work by the duty cycle's time interval, $\Delta t_{dutycycle}$, to determine mean reference power, P_{ref}.

(ii) Based on your engine design, estimate maximum power, P_{max}, the design speed at maximum power, f_{nmax}, the design maximum intake manifold boost pressure, p_{inmax}, and temperature, T_{inmax}. Also, estimate a mean fraction of power that is lost due to friction and pumping, $\bar{p}_{frict}$. Use this information along with the engine displacement volume, V_{disp}, an approximate volumetric efficiency, η_V, and the number

of engine strokes per power stroke (two-stroke or four-stroke), N_{stroke}, to estimate the maximum raw exhaust molar flow rate, $\dot{n}_{exhmax}$.

(iii) Use your estimated values as described in the following example calculation:

$$\overline{x}_{exp} = \frac{e_{std} \cdot W_{ref}}{M \cdot \dot{n}_{exhmax} \cdot \Delta t_{duty\ cycle} \cdot \left(\frac{\overline{P}_{ref} + \left(\overline{P}_{frict} \cdot P_{max} \right)}{P_{max}} \right)}$$

Eq. 1065.602-13

$$\dot{n}_{exhmax} = \frac{p_{max} \cdot V_{disp} \cdot f_{nmax} \cdot \frac{2}{N_{stroke}} \cdot \eta_V}{R \cdot T_{max}}$$

Eq. 1065.602-14

Example:
e_{NOx} = 2.5 g/(kW · hr)
W_{ref} = 11.883 kW · hr
M_{NOx} = 46.0055 g/mol = 46.0055 · 10^{-6} g/μmol
$\Delta t_{dutycycle}$ = 20 min = 1200 s
$\overline{P}_{ref}$ = 35.65 kW
$\overline{P}_{frict}$ = 15%
P_{max} = 125 kW
p_{max} = 300 kPa = 300,000 Pa
V_{disp} = 3.0 l = 0.0030 m^3/r
f_{nmax} = 2,800 r/min = 46.67 r/s
N_{stroke} = 4
η_V = 0.9
R = 8.314472 J/(mol · K)
T_{max} = 348.15 K

$$\dot{n}_{exhmax} = \frac{300000 \cdot 0.0030 \cdot 46.67 \cdot \frac{2}{4} \cdot 0.9}{8.314472 \cdot 348.15}$$

$\dot{n}_{exhmax}$ = 6.53 mol/s

$$\overline{x}_{exp} = \frac{2.5 \cdot 11.883}{46.0055 \cdot 10^{-6} \cdot 6.53 \cdot 1200 \cdot \left(\frac{35.65 + \left(0.15 \cdot 125 \right)}{125} \right)}$$

$\overline{x}_{exp}$ = 189.4 μmol/mol

(2) To estimate the flow-weighted mean NMHC concentration in a CVS from a naturally aspirated nonroad spark-ignition engine at an NMHC standard of 0.5 g/(kW · hr), you may do the following:

(i) Based on your engine design, approximate a map of maximum torque

versus speed and use it with the applicable normalized duty cycle in the standard-setting part to generate a reference duty cycle as described in § 1065.610. Calculate the total reference work, W_{ref}, as described in § 1065.650.

(ii) Multiply your CVS total molar flow rate by the time interval of the duty cycle, $\Delta t_{dutycycle}$. The result is the total diluted exhaust flow of the n_{dexh}.

(iii) Use your estimated values as described in the following example calculation:

$$\bar{x}_{NMHC} = \frac{e_{std} \cdot W_{ref}}{M \cdot \dot{n}_{dexh} \cdot \Delta t_{duty\ cycle}} \qquad \text{Eq. 1065.602-15}$$

Example:

e_{NMHC} = 1.5 g/(kW · hr)

W_{ref} = 5.389 kW · hr

M_{NMHC} = 13.875389 g/mol = 13.875389 · 10^{-6} g/μmol

$\dot{n}_{dexh}$ = 6.021 mol/s

$\Delta t_{dutycycle}$ = 30 min = 1800 s

$$\bar{x}_{NMHC} = \frac{1.5 \cdot 5.389}{13.875389 \cdot 10^{-6} \cdot 6.021 \cdot 1800}$$

$\bar{x}_{NMHC}$ = 53.8 μmol/mol

[70 FR 40516, July 13, 2005, as amended at 73 FR 37324, June 30, 2008; 75 FR 23044, Apr. 30, 2010; 76 FR 57452, Sept. 15, 2011; 79 FR 23779, Apr. 28, 2014; 81 FR 74170, Oct. 25, 2016]

EFFECTIVE DATE NOTE: At 86 FR 34548, June 29, 2021, § 1065.602 was amended, effective July 29, 2021.

§ 1065.610 Duty cycle generation.

This section describes how to generate duty cycles that are specific to your engine, based on the normalized duty cycles in the standard-setting part. During an emission test, use a duty cycle that is specific to your engine to command engine speed, torque, and power, as applicable, using an engine dynamometer and an engine operator demand. Paragraph (a) of this section describes how to ''normalize'' your engine's map to determine the maximum test speed and torque for your engine. The rest of this section describes how to use these values to ''denormalize'' the duty cycles in the standard-setting parts, which are all published on a normalized basis. Thus, the term ''normalized'' in paragraph (a) of this section refers to different values than it does in the rest of the section.

(a) *Maximum test speed*, f_{ntest}. This section generally applies to duty cycles for variable-speed engines. For constant-speed engines subject to duty cycles that specify normalized speed commands, use the no-load governed speed as the measured f_{ntest}. This is the highest engine speed where an engine outputs zero torque. For variable-speed engines, determine f_{ntest} as follows:

(1) Develop a measured value for f_{ntest} as follows:

(i) Determine maximum power, P_{max}, from the engine map generated according to § 1065.510 and calculate the value for power equal to 98% of P_{max}.

(ii) Determine the lowest and highest engine speeds corresponding to 98% of $P_{max,}$ using linear interpolation, and no extrapolation, as appropriate.

(iii) Determine the engine speed corresponding to maximum power, $f_{nPmax,}$ by calculating the average of the two speed values from paragraph (a)(1)(ii) of this section. If there is only one speed where power is equal to 98% of $P_{max,}$ take f_{nPmax} as the speed at which P_{max} occurs.

(iv) Transform the map into a normalized power-versus-speed map by dividing power terms by P_{max} and dividing speed terms by f_{nPmax}. Use the following equation to calculate a quantity representing the sum of squares from the normalized map:

$$\text{Sum of squares} = f_{\text{nnormi}}^2 + P_{\text{normi}}^2$$

Eq. 1065.610-1

Where:

i = an indexing variable that represents one recorded value of an engine map.

f_{nnormi} = an engine speed normalized by dividing it by f_{nPmax}.

P_{normi} = an engine power normalized by dividing it by P_{max}.

(v) Determine the maximum value for the sum of the squares from the map and multiply that value by 0.98.

(vi) Determine the lowest and highest engine speeds corresponding to the value calculated in paragraph (a)(1)(v) of this section, using linear interpolation as appropriate. Calculate f_{ntest} as the average of these two speed values.

(viii) The following example illustrates a calculation of f_{ntest}:

(f_{n1} = 2360, P_1 = 223.1, f_{nnorm1} = 1.002, P_{norm1} = 0.967)

(f_{n2} = 2364, P_2 = 227.7, f_{nnorm2} = 1.004, P_{norm2} = 0.986)

(f_{n3} = 2369, P_3 = 230.0, f_{nnorm3} = 1.006, P_{norm3} = 0.994)

(f_{n4} = 2374, P_4 = 220.8, f_{nnorm4} = 1.008, P_{norm4} = 0.951)

$$f_{ntest} = \frac{\left(\left(2360 + (2364 - 2360) \cdot \frac{0.98 \cdot 230.0 - 223.1}{227.7 - 223.1}\right) + \left(2369 + (2374 - 2369) \cdot \frac{0.98 \cdot 230.0 - 230.0}{220.8 - 230.0}\right)\right)}{2}$$

$$= \frac{2363 + 2371}{2} = 2367 \text{ r/min}$$

Sum of squares = ($1.002^2 + 0.967^2$) = 1.94

Sum of squares = ($1.004^2 + 0.986^2$) = 1.98

Sum of squares = ($1.006^2 + 0.994^2$) = 2.00

Sum of squares = ($1.008^2 + 0.951^2$) = 1.92

$$f_{npmax} = \frac{\left(\left(2360 + (2364 - 2360) \cdot \frac{0.98 \cdot 2.0 - 1.94}{1.98 - 1.94}\right) + \left(2369 + (2374 - 2369) \cdot \frac{0.98 \cdot 2.0 - 2.0}{1.92 - 2.0}\right)\right)}{2}$$

$$= \frac{2363 + 2371}{2} = 2367 \text{ r/min}$$

(vi) Determine the lowest and highest engine speeds corresponding to the value calculated in paragraph (a)(1)(v) of this section, using linear interpolation as appropriate. Calculate f_{ntest} as the average of these two speed values. If there is only one speed corresponding to the value calculated in paragraph (a)(1)(v) of this section, take f_{ntest} as the speed where the maximum of the sum of the squares occurs.

(vii) The following example illustrates a calculation of f_{ntest}:

P_{max} = 230.0

(f_{n1} = 2360, P_1 = 222.5, f_{nnorm1} = 1.002, P_{norm1} = 0.9675)

(f_{n2} = 2364, P_2 = 226.8, f_{nnorm2} = 1.004, P_{norm2} = 0.9859)

(f_{n3} = 2369, P_3 = 228.6, f_{nnorm3} = 1.006, P_{norm3} = 0.9940)

(f_{n4} = 2374, P_4 = 218.7, f_{nnorm4} = 1.008, P_{norm4} = 0.9508)

Sum of squares = ($1.002^2 + 0.9675^2$) = 1.94

Sum of squares = $(1.004^2 + 0.9859^2) = 1.98$
Sum of squares = $(1.006^2 + 0.9940^2) = 2.00$

Sum of squares = $(1.008^2 + 0.9508^2) = 1.92$

$$f_{\text{ntest}} = \frac{\left(\left(2360 + (2364 - 2360) \cdot \frac{0.98 \cdot 2.0 - 1.94}{1.98 - 1.94}\right) + \left(2369 + (2374 - 2369) \cdot \frac{0.98 \cdot 2.0 - 2.0}{1.92 - 2.0}\right)\right)}{2}$$

$$= \frac{2362.0 + 2371.5}{2} = 2366.8 \text{ r/min}$$

$$f_{\text{npmax}} = \frac{\left(\left(2360 + (2364 - 2360) \cdot \frac{0.98 \cdot 230.0 - 222.5}{226.8 - 222.5}\right) + \left(2369 + (2374 - 2369) \cdot \frac{0.98 \cdot 230.0 - 228.6}{218.7 - 228.6}\right)\right)}{2}$$

$$= \frac{2362.7 + 2370.6}{2} = 2366.7 \text{ r/min}$$

(2) For engines with a high-speed governor that will be subject to a reference duty cycle that specifies normalized speeds greater than 100%, calculate an alternate maximum test speed, $f_{\text{ntest,alt}}$, as specified in this paragraph (a)(2). If $f_{\text{ntest,alt}}$ is less than the measured maximum test speed, f_{ntest}, determined in paragraph (a)(1) of this section, replace f_{ntest} with $f_{\text{ntest,alt}}$. In this case, $f_{\text{ntest,alt}}$ becomes the ''maximum test speed'' for that engine. Note that §1065.510 allows you to apply an optional declared maximum test speed to the final measured maximum test speed determined as an outcome of the comparison between f_{ntest}, and $f_{\text{ntest,alt}}$ in this paragraph (a)(2). Determine $f_{\text{ntest,alt}}$ as follows:

$$f_{\text{ntest,alt}} = \frac{f_{\text{nhi,idle}} - f_{\text{nidle}}}{\%speed_{\text{max}}} + f_{\text{nidle}}$$

Eq. 1065.610-2

Where:

$f_{\text{ntest,alt}}$ = alternate maximum test speed
$f_{\text{nhi,idle}}$ = warm high-idle speed
f_{nidle} = warm idle speed
$\%\ speed_{\text{max}}$ = maximum normalized speed from duty cycle

Example:

$f_{\text{nhi,idle}}$ = 2200 r/min
f_{nidle} = 800 r/min

$$f_{\text{ntest,alt}} = \frac{2200 - 800}{1.05} + 800$$

$f_{\text{ntest,alt}}$ = 2133 r/min

(3) For variable-speed engines, transform normalized speeds to reference speeds according to paragraph (c) of this section by using the measured maximum test speed determined according to paragraphs (a)(1) and (2) of

this section—or use your declared maximum test speed, as allowed in § 1065.510.

(4) For constant-speed engines, transform normalized speeds to reference speeds according to paragraph (c) of this section by using the measured no-load governed speed—or use your declared maximum test speed, as allowed in § 1065.510.

(b) *Maximum test torque, T_{test}.* For constant-speed engines, determine the measured T_{test} from the torque and power-versus-speed maps, generated according to § 1065.510, as follows:

(1) For constant speed engines mapped using the methods in § 1065.510(d)(5)(i) or (ii), determine T_{test} as follows:

(i) Determine maximum power, P_{max}, from the engine map generated according to § 1065.510 and calculate the value for power equal to 98% of P_{max}.

(ii) Determine the lowest and highest engine speeds corresponding to 98% of P_{max}, using linear interpolation, and no extrapolation, as appropriate.

(iii) Determine the engine speed corresponding to maximum power, f_{nPmax}, by calculating the average of the two speed values from paragraph (a)(1)(ii) of this section. If there is only one speed where power is equal to 98% of P_{max}, take f_{nPmax} as the speed at which P_{max} occurs.

(iv) Transform the map into a normalized power-versus-speed map by dividing power terms by P_{max} and dividing speed terms by f_{nPmax}. Use Eq. 1065.610–1 to calculate a quantity representing the sum of squares from the normalized map.

(v) Determine the maximum value for the sum of the squares from the map and multiply that value by 0.98.

(vi) Determine the lowest and highest engine speeds corresponding to the value calculated in paragraph (a)(1)(v) of this section, using linear interpolation as appropriate. Calculate f_{ntest} as the average of these two speed values. If there is only one speed corresponding to the value calculated in paragraph (a)(1)(v) of this section, take f_{ntest} as the speed where the maximum of the sum of the squares occurs.

(vii) The measured T_{test} is the mapped torque at f_{ntest}.

(2) For constant-speed engines using the two-point mapping method in § 1065.510(d)(5)(iii), you may follow paragraph (a)(1) of this section to determine the measured T_{test}, or you may use the measured torque of the second point as the measured T_{test} directly.

(3) Transform normalized torques to reference torques according to paragraph (d) of this section by using the measured maximum test torque determined according to paragraph (b)(1) of this section—or use your declared maximum test torque, as allowed in § 1065.510.

(c) *Generating reference speed values from normalized duty cycle speeds.* Transform normalized speed values to reference values as follows:

(1) *% speed.* If your normalized duty cycle specifies % speed values, use your warm idle speed and your maximum test speed to transform the duty cycle, as follows:

$$f_{nref} = \%\ speed \cdot (f_{ntest} - f_{nidle}) + f_{nidle}$$

Eq. 1065.610-3

Example:
% speed = 85% = 0.85
f_{ntest} = 2364 r/min
f_{nidle} = 650 r/min
f_{nref} = 0.85 • (2364 − 650) + 650
f_{nref} = 2107 r/min

(2) *A, B, and C speeds.* If your normalized duty cycle specifies speeds as A, B, or C values, use your power-versus-speed curve to determine the lowest speed below maximum power at which 50% of maximum power occurs. Denote this value as n_{lo}. Take n_{lo} to be warm idle speed if all power points at speeds below the maximum power speed are higher than 50% of maximum power.

Also determine the highest speed above maximum power at which 70% of maximum power occurs. Denote this value as n_{hi}. If all power points at speeds above the maximum power speed are higher than 70% of maximum power, take n_{hi} to be the declared maximum safe engine speed or the declared maximum representative engine speed, whichever is lower. Use n_{hi} and n_{lo} to calculate reference values for A, B, or C speeds as follows:

$$f_{nrefA} = 0.25 \cdot (n_{hi} - n_{lo}) + n_{lo}$$

Eq. 1065.610-4

$$f_{nrefB} = 0.50 \cdot (n_{hi} - n_{lo}) + n_{lo}$$

Eq. 1065.610-5

$$f_{nrefC} = 0.75 \cdot (n_{hi} - n_{lo}) + n_{lo}$$

Eq. 1065.610-6

Example:
n_{lo} = 1005 r/min
n_{hi} = 2385 r/min
f_{nrefA} = 0.25 • (2385 − 1005) + 1005
f_{nrefB} = 0.50 • (2385 − 1005) + 1005
f_{nrefC} = 0.75 • (2385 − 1005) + 1005
f_{nrefA} = 1350 r/min
f_{nrefB} = 1695 r/min
f_{nrefC} = 2040 r/min

(3) *Intermediate speed*. Based on the map, determine maximum torque, T_{max}, and the corresponding speed, f_{nTmax}, calculated as the average of the lowest and highest speeds at which torque is equal to 98% of T_{max}. Use linear interpolation between points to determine the speeds where torque is equal to 98% of T_{max}. Identify your reference intermediate speed as one of the following values:

(i) f_{nTmax} if it is between (60 and 75) % of maximum test speed.

(ii) 60% of maximum test speed if f_{nTmax} is less than 60% of maximum test speed.

(iii) 75% of maximum test speed if f_{nTmax} is greater than 75% of maximum test speed.

(d) *Generating reference torques from normalized duty-cycle torques*. Transform normalized torques to reference torques using your map of maximum torque versus speed.

(1) *Reference torque for variable-speed engines*. For a given speed point, multiply the corresponding % torque by the maximum torque at that speed, according to your map. If your engine is subject to a reference duty cycle that specifies negative torque values (*i.e.*, engine motoring), use negative torque for those motoring points (*i.e.*, the motoring torque). If you map negative torque as allowed under § 1065.510 (c)(2) and the low-speed governor activates, resulting in positive torques, you may replace those positive motoring mapped torques with negative values between zero and the largest negative motoring torque. For both maximum and motoring torque maps, linearly interpolate mapped torque values to determine torque between mapped speeds. If the reference speed is below the minimum mapped speed (*i.e.*, 95% of idle speed or 95% of lowest required speed, whichever is higher), use the mapped torque at the minimum mapped speed as the reference torque. The result is the reference torque for each speed point.

(2) *Reference torque for constant-speed engines*. Multiply a % torque value by your maximum test torque. The result is the reference torque for each point.

(3) *Required deviations*. We require the following deviations for variable-speed engines intended primarily for propulsion of a vehicle with an automatic

transmission where that engine is subject to a transient duty cycle with idle operation. These deviations are intended to produce a more representative transient duty cycle for these applications. For steady-state duty cycles or transient duty cycles with no idle operation, these requirements do not apply. Idle points for steady state duty cycles of such engines are to be run at conditions simulating neutral or park on the transmission.

(i) Zero-percent speed is the warm idle speed measured according to §1065.510(b)(6) with CITT applied, *i.e.*, measured warm idle speed in drive.

(ii) If the cycle begins with a set of contiguous idle points (zero-percent speed, and zero-percent torque), leave the reference torques set to zero for this initial contiguous idle segment. This is to represent free idle operation with the transmission in neutral or park at the start of the transient duty cycle, after the engine is started. If the initial idle segment is longer than 24 seconds, change the reference torques for the remaining idle points in the initial contiguous idle segment to CITT (i.e., change idle points corresponding to 25 seconds to the end of the initial idle segment to CITT). This is to represent shifting the transmission to drive.

(iii) For all other idle points, change the reference torque to CITT. This is to represent the transmission operating in drive.

(iv) If the engine is intended primarily for automatic transmissions with a Neutral-When-Stationary feature that automatically shifts the transmission to neutral after the vehicle is stopped for a designated time and automatically shifts back to drive when the operator increases demand (*i.e.*, pushes the accelerator pedal), change the reference torque back to zero for idle points in drive after the designated time.

(v) For all points with normalized speed at or below zero percent and reference torque from zero to CITT, set the reference torque to CITT. This is to provide smoother torque references below idle speed.

(vi) For motoring points, make no changes.

(vii) For consecutive points with reference torques from zero to CITT that immediately follow idle points, change their reference torques to CITT. This is to provide smooth torque transition out of idle operation. This does not apply if the Neutral-When-Stationary feature is used and the transmission has shifted to neutral.

(viii) For consecutive points with reference torque from zero to CITT that immediately precede idle points, change their reference torques to CITT. This is to provide smooth torque transition into idle operation.

(4) *Permissible deviations for any engine.* If your engine does not operate below a certain minimum torque under normal in-use conditions, you may use a declared minimum torque as the reference value instead of any value denormalized to be less than the declared value. For example, if your engine is connected to a hydrostatic transmission and it has a minimum torque even when all the driven hydraulic actuators and motors are stationary and the engine is at idle, then you may use this declared minimum torque as a reference torque value instead of any reference torque value generated under paragraph (d)(1) or (2) of this section that is between zero and this declared minimum torque.

(e) *Generating reference power values from normalized duty cycle powers.* Transform normalized power values to reference speed and power values using your map of maximum power versus speed.

(1) First transform normalized speed values into reference speed values. For a given speed point, multiply the corresponding % power by the mapped power at maximum test speed, f_{ntest}, unless specified otherwise by the standard-setting part. The result is the reference power for each speed point, P_{ref}. Convert these reference powers to corresponding torques for operator demand and dynamometer control and for duty cycle validation per 1065.514. Use the reference speed associated with each reference power point for this conversion. As with cycles specified with % torque, linearly interpolate between these reference torque values generated from cycles with % power.

(2) Permissible deviations for any engine. If your engine does not operate below a certain power under normal in-use conditions, you may use a declared minimum power as the reference value instead of any value denormalized to be less than the declared value. For example, if your engine is directly connected to a propeller, it may have a minimum power called idle power. In this case, you may use this declared minimum power as a reference power value instead of any reference power value generated per paragraph (e)(1) of this section that is from zero to this declared minimum power.

[73 FR 37324, June 30, 2008, as amended at 73 FR 59330, Oct. 8, 2008; 75 FR 23045, Apr. 30, 2010; 76 FR 57453, Sept. 15, 2011; 78 FR 36398, June 17, 2013; 79 FR 23783, Apr. 28, 2014; 80 FR 9118, Feb. 19, 2015; 81 FR 74170, Oct. 25, 2016]

EFFECTIVE DATE NOTE: At 86 FR 34555, June 29, 2021, § 1065.610 was amended, effective July 29, 2021.

§ 1065.630 Local acceleration of gravity.

(a) The acceleration of Earth's gravity, a_g, varies depending on the test location. Determine a_g at your location by entering latitude, longitude, and elevation data into the U.S. National Oceanographic and Atmospheric Administration's surface gravity prediction Web site at *http://www.ngs.noaa.gov/cgi-bin/grav___pdx.prl.*

(b) If the Web site specified in paragraph (a) of this section is unavailable, you may calculate a_g for your latitude as follows:

$$a_g = 9.7803267715 \cdot [1 + 5.2790414 \cdot 10^{-3} \cdot \sin^2(\theta) + 2.32718 \cdot 10^{-5} \cdot \sin^4(\theta) + 1.262 \cdot 10^{-7} \cdot \sin^6(\theta) + 7 \cdot 10^{-10} \cdot \sin^8(\theta)]$$

Eq. 1065.630-1

Where:

θ = Degrees north or south latitude.

Example:

$\theta = 45°$

$a_g = 9.7803267715 \cdot (1 + 5.2790414 \cdot 10^{-3} \cdot \sin^2(45) + 2.32718 \cdot 10^{-5} \cdot \sin^4(45) + 1.262 \cdot 10^{-7} \cdot \sin^6(45) + 7 \cdot 10^{-10} \cdot \sin^8(45)$

$a_g = 9.8061992026$ m/s^2

[79 FR 23784, Apr. 28, 2014]

§ 1065.640 Flow meter calibration calculations.

This section describes the calculations for calibrating various flow meters. After you calibrate a flow meter using these calculations, use the calculations described in § 1065.642 to calculate flow during an emission test. Paragraph (a) of this section first describes how to convert reference flow meter outputs for use in the calibration equations, which are presented on a molar basis. The remaining paragraphs describe the calibration calculations that are specific to certain types of flow meters.

(a) *Reference meter conversions.* The calibration equations in this section use molar flow rate, $\dot{n}_{ref}$, as a reference quantity. If your reference meter outputs a flow rate in a different quantity, such as standard volume rate, $\dot{v}_{stdref}$, actual volume rate, $\dot{v}_{actref}$, or mass rate, $\dot{m}_{ref}$, convert your reference meter output to a molar flow rate using the following equations, noting that while values for volume rate, mass rate, pressure, temperature, and molar mass may change during an emission test, you should ensure that they are as constant as practical for each individual set point during a flow meter calibration:

$$\dot{n}_{\mathrm{ref}} = \frac{\dot{V}_{\mathrm{stdref}} \cdot p_{\mathrm{std}}}{T_{\mathrm{std}} \cdot R} = \frac{\dot{V}_{\mathrm{actref}} \cdot p_{\mathrm{act}}}{T_{\mathrm{act}} \cdot R} = \frac{\dot{m}_{\mathrm{ref}}}{M_{\mathrm{mix}}}$$

Eq. 1065.640-1

Where:

$\dot{n}_{\mathrm{ref}}$ = reference molar flow rate.

$\dot{v}_{\mathrm{stdref}}$ = reference volume flow rate, corrected to a standard pressure and a standard temperature.

$\dot{v}_{\mathrm{actref}}$ = reference volume flow rate at the actual pressure and temperature of the flow rate.

$\dot{m}_{\mathrm{ref}}$ = reference mass flow.

p_{std} = standard pressure.

p_{act} = actual pressure of the flow rate.

T_{std} = standard temperature.

T_{act} = actual temperature of the flow rate.

R = molar gas constant.

M_{mix} = molar mass of the flow rate.

Example 1:

$\dot{v}_{\mathrm{stdref}}$ = 1000.00 ft^3/min = 0.471948 m^3/s

p_{std} = 29.9213 in Hg @32 °F = 101.325 kPa = 101325 Pa = 101325 kg/(m·s^2)

T_{std} = 68.0 °F = 293.15 K

R = 8.314472 J/(mol·K) = 8.314472 (m^2·kg)/(s^2·mol·K)

$$\dot{n}_{\mathrm{ref}} = \frac{0.471948 \cdot 101325}{293.15 \cdot 8.314472}$$

$\dot{n}_{\mathrm{ref}}$ = 19.619 mol/s

Example 2:

$\dot{m}_{\mathrm{ref}}$ = 17.2683 kg/min = 287.805 g/s

$\dot{M}_{\mathrm{mix}}$ = 28.7805 g/mol

$$\dot{n}_{\mathrm{ref}} = \frac{287.805}{28.7805}$$

$\dot{n}_{\mathrm{ref}}$ = 10.0000 mol/s

(b) *PDP calibration calculations.* Perform the following steps to calibrate a PDP flow meter:

(1) Calculate PDP volume pumped per revolution, V_{rev}, for each restrictor position from the mean values determined in § 1065.340 as follows:

$$V_{\mathrm{rev}} = \frac{\overline{\dot{n}}_{\mathrm{ref}} \cdot R \cdot \overline{T}_{\mathrm{in}}}{\overline{p}_{\mathrm{in}} \cdot \overline{f}_{\mathrm{nPDP}}}$$

Eq. 1065.640-2

Where:

$\dot{n}_{\mathrm{ref}}$ = mean reference molar flow rate.

R = molar gas constant.

$\overline{T}_{\mathrm{in}}$ = mean temperature at the PDP inlet.

$\overline{P}_{\mathrm{in}}$ = mean static absolute pressure at the PDP inlet.

$\overline{f}_{\mathrm{nPDP}}$ = mean PDP speed.

Example:

$\dot{n}_{\mathrm{ref}}$ = 25.096 mol/s

R = 8.314472 J/(mol·K) = 8.314472 (m^2·kg)/(s^2·mol·K)

$\overline{T}_{\mathrm{in}}$ = 299.5 K

$\overline{P}_{\mathrm{in}}$ = 98.290 kPa = 98290 Pa = 98290 kg/(m·s^2)

$\overline{f}_{\mathrm{nPDP}}$ = 1205.1 r/min = 20.085 r/s

$$V_{rev} = \frac{25.096 \cdot 8.314472 \cdot 299.5}{98290 \cdot 20.085}$$

V_{rev} = 0.03166 m³/r

(2) Calculate a PDP slip correction factor, K_s, for each restrictor position from the mean values determined in § 1065.340 as follows:

$$K_s = \frac{1}{\overline{f}_{nPDP}} \cdot \sqrt{\frac{\overline{p}_{out} - \overline{p}_{in}}{\overline{p}_{out}}}$$

Eq. 1065.640-3

Where:
$\bar{f}_{nPDP}$ = mean PDP speed.
$\bar{P}_{out}$ = mean static absolute pressure at the PDP outlet.
$\bar{P}_{in}$ = mean static absolute pressure at the PDP inlet.

Example:
$\bar{f}_{nPDP}$ = 1205.1 r/min = 20.085 r/s
$\bar{P}_{out}$ = 100.103 kPa
$\bar{P}_{in}$ = 98.290 kPa

$$K_s = \frac{1}{20.085} \cdot \sqrt{\frac{100.103 - 98.290}{100.103}}$$

K_s = 0.006700 s/r

(3) Perform a least-squares regression of $V_{rev,}$ versus $K_{s,}$ by calculating slope, $a_{1,}$ and intercept, $a_{0,}$ as described in § 1065.602.

(4) Repeat the procedure in paragraphs (b)(1) through (3) of this section for every speed that you run your PDP.

(5) The following table illustrates a range of typical values for different PDP speeds:

TABLE 1 OF § 1065.640—EXAMPLE OF PDP CALIBRATION DATA

$\bar{f}_{nPDP}$ (revolution/s)	a_1 (m³/s)	a_0 (m³/revolution)
12.6	0.841	0.056
16.5	0.831	−0.013
20.9	0.809	0.028
23.4	0.788	−0.061

(6) For each speed at which you operate the PDP, use the appropriate regression equation from this paragraph (b) to calculate flow rate during emission testing as described in § 1065.642.

(c) *Venturi governing equations and permissible assumptions.* This section describes the governing equations and permissible assumptions for calibrating a venturi and calculating flow using a venturi. Because a subsonic venturi (SSV) and a critical-flow venturi (CFV) both operate similarly, their governing equations are nearly the same, except for the equation describing their pressure ratio, r (*i.e.*, r_{SSV} versus r_{CFV}). These governing equations assume one-dimensional isentropic

inviscid flow of an ideal gas. Paragraph (c)(5) of this section describes other assumptions that may apply. If good engineering judgment dictates that you account for gas compressibility, you may either use an appropriate equation of state to determine values of Z as a function of measured pressure and temperature, or you may develop your own calibration equations based on good engineering judgment. Note that the equation for the flow coefficient, C_f, is based on the ideal gas assumption that the isentropic exponent, γ, is equal to the ratio of specific heats, C_p/C_v. If good engineering judgment dictates using a real gas isentropic exponent, you may either use an appropriate equation of state to determine values of γ as a function of measured pressures and temperatures, or you may develop your own calibration equations based on good engineering judgment.

(1) Calculate molar flow rate, $\dot{n}$, as follows:

$$\dot{n} = C_d \cdot C_f \cdot \frac{A_t \cdot p_{in}}{\sqrt{Z \cdot M_{mix} \cdot R \cdot T_{in}}}$$

Eq. 1065.640-4

Where:

C_d = discharge coefficient, as determined in paragraph (c)(2) of this section.

C_f = flow coefficient, as determined in paragraph (c)(3) of this section.

A_t = venturi throat cross-sectional area.

p_{in} = venturi inlet absolute static pressure.

Z = compressibility factor.

M_{mix} = molar mass of gas mixture.

R = molar gas constant.

T_{in} = venturi inlet absolute temperature.

(2) Using the data collected in §1065.340, calculate C_d for each flow rate using the following equation:

$$C_d = \dot{n}_{ref} \cdot \frac{\sqrt{Z \cdot M_{mix} \cdot R \cdot T_{in}}}{C_f \cdot A_t \cdot p_{in}}$$

Eq. 1065.640-5

Where:

$\dot{n}_{ref}$ = a reference molar flow rate.

(3) Determine C_f using one of the following methods:

(i) For CFV flow meters only, determine C_{fCFV} from the following table based on your values for β and γ, using linear interpolation to find intermediate values:

TABLE 2 OF §1065.640–C_{fCFV} VERSUS β AND γ FOR CFV FLOW METERS

C_{fCFV}		
β	γ_{exh} = 385	γ_{dexh} = γ_{air} = 399
0.000	0.6822	0.6846
0.400	0.6857	0.6881
0.500	0.6910	0.6934
0.550	0.6953	0.6977
0.600	0.7011	0.7036
0.625	0.7047	0.7072
0.650	0.7089	0.7114
0.675	0.7137	0.7163
0.700	0.7193	0.7219
0.720	0.7245	0.7271
0.740	0.7303	0.7329
0.760	0.7368	0.7395
0.770	0.7404	0.7431

TABLE 2 OF § 1065.640–C_{fCFV} VERSUS β AND γ FOR CFV FLOW METERS—Continued

C_{fCFV}		
β	γ_{exh} = 385	γ_{dexh} = γ_{air} = 399
0.780	0.7442	0.7470
0.790	0.7483	0.7511
0.800	0.7527	0.7555
0.810	0.7573	0.7602
0.820	0.7624	0.7652
0.830	0.7677	0.7707
0.840	0.7735	0.7765

TABLE 2 OF § 1065.640–C_{fCFV} VERSUS β AND γ FOR CFV FLOW METERS—Continued

C_{fCFV}		
β	γ_{exh} = 385	γ_{dexh} = γ_{air} = 399
0.850	0.7798	0.7828

(ii) For any CFV or SSV flow meter, you may use the following equation to calculate C_f for each flow rate:

$$C_f = \left[\frac{2 \cdot \gamma \cdot \left(r^{\frac{\gamma-1}{\gamma}} - 1 \right)}{(\gamma - 1) \cdot \left(\beta^4 - r^{\frac{-2}{\gamma}} \right)} \right]^{\frac{1}{2}}$$

Eq. 1065.640-6

Where:

γ = isentropic exponent. For an ideal gas, this is the ratio of specific heats of the gas mixture, C_p/C_v.

r = pressure ratio, as determined in paragraph (c)(4) of this section.

β = ratio of venturi throat to inlet diameters.

(4) Calculate r as follows:

(i) For SSV systems only, calculate r_{SSV} using the following equation:

$$r_{SSV} = 1 - \frac{\Delta p_{SSV}}{p_{in}}$$

Eq. 1065.640-7

Where:

Δp_{SSV} = Differential static pressure; venturi inlet minus venturi throat.

(ii) For CFV systems only, calculate r_{CFV} iteratively using the following equation:

$$r_{CFV}^{\frac{1-\gamma}{\gamma}} + \left(\frac{\gamma - 1}{2} \right) \cdot \beta^4 \cdot r_{CFV}^{\frac{2}{\gamma}} = \frac{\gamma + 1}{2}$$

Eq. 1065.640-8

(5) You may apply any of the following simplifying assumptions or develop other values as appropriate for your test configuration, consistent with good engineering judgment:

(i) For raw exhaust, diluted exhaust, and dilution air, you may assume that the gas mixture behaves as an ideal gas: $Z = 1$.

(ii) For raw exhaust, you may assume $\gamma = 1.385$.

(iii) For diluted exhaust and dilution air, you may assume $\gamma = 1.399$.

(iv) For diluted exhaust and dilution air, you may assume the molar mass of the mixture, M_{mix}, is a function only of the amount of water in the dilution air or calibration air, as follows:

$$M_{mix} = M_{air} \cdot (1 - x_{H2O}) + M_{H2O} \cdot x_{H2O}$$

Eq. 1065.640-9

Where:

M_{air} = molar mass of dry air.

x_{H2O} = amount of H_2O in the dilution air or calibration air, determined as described in § 1065.645.

M_{H2O} = molar mass of water.

Example:

M_{air} = 28.96559 g/mol

x_{H2O} = 0.0169 mol/mol

M_{H2O} = 18.01528 g/mol

M_{mix} = 28.96559 · (1– 0.0169) + 18.01528 · 0.0169

M_{mix} = 28.7805 g/mol

(v) For diluted exhaust and dilution air, you may assume a constant molar mass of the mixture, M_{mix}, for all calibration and all testing as long as your assumed molar mass differs no more than ±1% from the estimated minimum and maximum molar mass during calibration and testing.

You may assume this, using good engineering judgment, if you sufficiently control the amount of water in calibration air and in dilution air or if you remove sufficient water from both calibration air and dilution air. The following table gives examples of permissible ranges of dilution air dewpoint versus calibration air dewpoint:

TABLE 3 OF § 1065.640—EXAMPLES OF DILUTION AIR AND CALIBRATION AIRDEWPOINTS AT WHICH YOU MAY ASSUME A CONSTANT M_{mix}

If calibration T_{dew} (°C) is . . .	assume the following constant M_{mix} (g/mol) . . .	for the following ranges of T_{dew} (°C) during emission tests [a]
dry	28.96559	dry to 18

TABLE 3 OF § 1065.640—EXAMPLES OF DILUTION AIR AND CALIBRATION AIRDEWPOINTS AT WHICH YOU MAY ASSUME A CONSTANT M_{mix}—Continued

If calibration T_{dew} (°C) is . . .	assume the following constant M_{mix} (g/mol) . . .	for the following ranges of T_{dew} (°C) during emission tests [a]
0	28.89263	dry to 21
5	28.86148	dry to 22
10	28.81911	dry to 24
15	28.76224	dry to 26
20	28.68685	–8 to 28
25	28.58806	12 to 31
30	28.46005	23 to 34

[a] Range valid for all calibration and emission testing over the atmospheric pressure range (80.000 to 103.325) kPa.

(6) The following example illustrates the use of the governing equations to calculate C_d of an SSV flow meter at one reference flow meter value. Note that calculating C_d for a CFV flow meter would be similar, except that C_f would be determined from Table 2 of this section or calculated iteratively using values of β and γ as described in paragraph (c)(2) of this section.

Example:

$\dot{n}_{ref}$ = 57.625 mol/s

$Z = 1$

M_{mix} = 28.7805 g/mol = 0.0287805 kg/mol

R = 8.314472 J/(mol · K) = 8.314472 (m^2 · kg)/(s^2 · mol · K)

T_{in} = 298.15 K

A_t = 0.01824 m^2

p_{in} = 99.132 kPa = 99132.0 Pa = 99132 kg/(m·s^2)

$\gamma = 1.399$

$\beta = 0.8$

Δp = 2.312 kPa

$$r_{SSV} = 1 - \frac{2.312}{99.132} = 0.977$$

$$C_f = \left[\frac{2 \cdot 1.399 \cdot \left(0.977^{\frac{1.399-1}{1.399}} - 1\right)}{(1.399-1) \cdot \left(0.8^4 - 0.977^{\frac{-2}{1.399}}\right)} \right]^{\frac{1}{2}}$$

$C_f = 0.274$

$$C_d = 57.625 \cdot \frac{\sqrt{1 \cdot 0.0287805 \cdot 8.314472 \cdot 298.15}}{0.274 \cdot 0.01824 \cdot 99132.0}$$

$C_d = 0.982$

(d) *SSV calibration*. Perform the following steps to calibrate an SSV flow meter:

(1) Calculate the Reynolds number, $Re^{\#}$, for each reference molar flow rate, $\dot{n}_{ref}$, using the throat diameter of the venturi, d_t. Because the dynamic viscosity, μ, is needed to compute $Re^{\#}$, you may use your own fluid viscosity model to determine μ for your calibration gas (usually air), using good engineering judgment. Alternatively, you may use the Sutherland three-coefficient viscosity model to approximate μ, as shown in the following sample calculation for $Re^{\#}$:

$$Re^{\#} = \frac{4 \cdot M_{mix} \cdot \dot{n}_{ref}}{\pi \cdot d_t \cdot \mu}$$

Eq. 1065.640-10

Where, using the Sutherland three-coefficient viscosity model:

$$\mu = \mu_0 \cdot \left(\frac{T_{in}}{T_0}\right)^{\frac{3}{2}} \cdot \left(\frac{T_0 + S}{T_{in} + S}\right)$$

Eq. 1065.640-11

Where:

μ_0 = Sutherland reference viscosity.

T_0 = Sutherland reference temperature.

S = Sutherland constant.

TABLE 4 OF § 1065.640—SUTHERLAND THREE-COEFFICIENT VISCOSITY MODEL PARAMETERS

Gas [a]	μ_0	T_0	S	Temperature range within ± 2% error [b]	Pressure limit [b]
	kg/(m·s)	K	K	K	kPa
Air	$1.716 \cdot 10^{-5}$	273	111	170 to 1900	≤ 1800
CO_2	$1.370 \cdot 10^{-5}$	273	222	190 to 1700	≤ 3600
H_2	$1.12 \cdot 10^{-5}$	350	1064	360 to 1500	≤ 10000
O_2	$1.919 \cdot 10^{-5}$	273	139	190 to 2000	≤ 2500
N_2	$1.663 \cdot 10^{-5}$	273	107	100 to 1500	≤ 1600

[a] Use tabulated parameters only for the pure gases, as listed. Do not combine parameters in calculations to calculate viscosities of gas mixtures.
[b] The model results are valid only for ambient conditions in the specified ranges.

Example:
$\mu_0 = 1.716 \cdot 10^{-5}$ kg/(m·s)
$T_0 = 273$ K
$S = 111$ K

$$\mu = 1.716 \cdot 10^{-5} \cdot \left(\frac{298.15}{273}\right)^{\frac{3}{2}} \cdot \left(\frac{273+111}{298.15+111}\right)$$

$\mu = 1.838 \cdot 10^{-5}$ kg/(m·s)
$M_{mix} = 28.7805$ g/mol
$\dot{n}_{ref} = 57.625$ mol/s
$d_t = 152.4$ mm = 0.1524 m
$T_{in} = 298.15$ K

$$Re^{\#} = \frac{4 \cdot 28.7805 \cdot 57.625}{3.14159 \cdot 0.1524 \cdot 1.838 \cdot 10^{-5}}$$

$Re^{\#} = 7.538 \cdot 10^{8}$

(2) Create an equation for C_d as a function of $Re^{\#}$, using paired values of the two quantities. The equation may involve any mathematical expression, including a polynomial or a power series. The following equation is an example of a commonly used mathematical expression for relating C_d and $Re^{\#}$:

$$C_d = a_0 - a_1 \cdot \sqrt{\frac{10^6}{Re^{\#}}}$$

Eq. 1065.640-12

(3) Perform a least-squares regression analysis to determine the best-fit coefficients for the equation and calculate *SEE* as described in § 1065.602.

(4) If the equation meets the criterion of $SEE \leq 0.5\% \cdot C_{dmax}$, you may use the equation for the corresponding range of $Re^{\#}$, as described in § 1065.642.

(5) If the equation does not meet the specified statistical criterion, you may use good engineering judgment to omit calibration data points; however you must use at least seven calibration

data points to demonstrate that you meet the criterion. For example, this may involve narrowing the range of flow rates for a better curve fit.

(6) Take corrective action if the equation does not meet the specified statistical criterion even after omitting calibration data points. For example, select another mathematical expression for the C_d versus $Re^{\#}$ equation, check for leaks, or repeat the calibration process. If you must repeat the calibration process, we recommend applying tighter tolerances to measurements and allowing more time for flows to stabilize.

(7) Once you have an equation that meets the specified statistical criterion, you may use the equation only for the corresponding range of $Re^{\#}$.

(e) *CFV calibration.* Some CFV flow meters consist of a single venturi and some consist of multiple venturis, where different combinations of venturis are used to meter different flow rates. For CFV flow meters that consist of multiple venturis, either calibrate each venturi independently to determine a separate discharge coefficient, C_d, for each venturi, or calibrate each combination of venturis as one venturi. In the case where you calibrate a combination of venturis, use the sum of the active venturi throat areas as A_t, the square root of the sum of the squares of the active venturi throat diameters as d_t, and the ratio of the venturi throat to inlet diameters as the ratio of the square root of the sum of the active venturi throat diameters (d_t) to the diameter of the common entrance to all the venturis. (D). To determine the C_d for a single venturi or a single combination of venturis, perform the following steps:

(1) Use the data collected at each calibration set point to calculate an individual C_d for each point using Eq. 1065.640–4.

(2) Calculate the mean and standard deviation of all the C_d values according to Eqs. 1065.602–1 and 1065.602–2.

(3) If the standard deviation of all the C_d values is less than or equal to 0.3% of the mean C_d, use the mean C_d in Eq. 1065.642–4, and use the CFV only up to the highest venturi pressure ratio, r, measured during calibration using the following equation:

$$r = 1 - \frac{\Delta p_{\mathrm{CFV}}}{p_{\mathrm{in}}}$$

Eq. 1065.640-13

Where:

Δp_{CFV} = Differential static pressure; venturi inlet minus venturi outlet.

(4) If the standard deviation of all the C_d values exceeds 0.3% of the mean C_d, omit the C_d value corresponding to the data point collected at the highest r measured during calibration.

(5) If the number of remaining data points is less than seven, take corrective action by checking your calibration data or repeating the calibration process. If you repeat the calibration process, we recommend checking for leaks, applying tighter tolerances to measurements and allowing more time for flows to stabilize.

(6) If the number of remaining C_d values is seven or greater, recalculate the mean and standard deviation of the remaining C_d values.

(7) If the standard deviation of the remaining C_d values is less than or equal to 0.3% of the mean of the remaining C_d, use that mean C_d in Eq. 1065.642–4, and use the CFV values only up to the highest r associated with the remaining C_d.

(8) If the standard deviation of the remaining C_d still exceeds 0.3% of the

mean of the remaining C_d values, repeat the steps in paragraph (e)(4) through (8) of this section.

[79 FR 23785, Apr. 28, 2014, as amended at 81 FR 74172, Oct. 25, 2016]

EFFECTIVE DATE NOTE: At 86 FR 34556, June 29, 2021, § 1065.640 was amended, effective July 29, 2021.

§ 1065.642 PDP, SSV, and CFV molar flow rate calculations.

This section describes the equations for calculating molar flow rates from various flow meters. After you calibrate a flow meter according to § 1065.640, use the calculations described in this section to calculate flow during an emission test.

(a) *PDP molar flow rate.* (1) Based on the speed at which you operate the PDP for a test interval, select the corresponding slope, a_1, and intercept, a_0, as calculated in § 1065.640, to calculate PDP molar flow rate,, as follows:

$$\dot{n} = f_{\mathrm{nPDP}} \cdot \frac{V_{\mathrm{rev}} \cdot p_{\mathrm{in}}}{R \cdot T_{\mathrm{in}}}$$

Eq. 1065.642-1

Where:

f_{nPDP} = pump speed.

V_{rev} = PDP volume pumped per revolution, as determined in paragraph (a)(2) of this section.

p_{in} = static absolute pressure at the PDP inlet.

R = molar gas constant.

T_{in} = absolute temperature at the PDP inlet.

(2) Calculate V_{rev} using the following equation:

$$V_{\mathrm{rev}} = \frac{a_1}{f_{\mathrm{nPDP}}} \cdot \sqrt{\frac{p_{\mathrm{out}} - p_{\mathrm{in}}}{p_{\mathrm{out}}}} + a_0$$

Eq. 1065.642-2

p_{out} = static absolute pressure at the PDP outlet.

Example:

a_1 = 0.8405 (m^3/s)

f_{nPDP} = 12.58 r/s

P_{out} = 99.950 kPa

P_{in} = 98.575 kPa = 98575 Pa = 98575 kg/(m·s^2)

a_0 = 0.056 (m^3/r)

R = 8.314472 J/(mol·K) = 8.314472 (m^2·kg)/(s^2·mol·K)

T_{in} = 323.5 K

$$V_{\mathrm{rev}} = \frac{0.8405}{12.58} \cdot \sqrt{\frac{99.950 - 98.575}{99.950}} + 0.056$$

$$\dot{n} = 12.58 \cdot \frac{98575 \cdot 0.06383}{8.314472 \cdot 323.5}$$

$\dot{n}$ = 29.428 mol/s

(b) *SSV molar flow rate.* Calculate SSV molar flow rate, $\dot{n}$, as follows:

$$\dot{n} = C_d \cdot C_f \cdot \frac{A_t \cdot p_{in}}{\sqrt{Z \cdot M_{mix} \cdot R \cdot T_{in}}}$$

Eq. 1065.642-3

Where:

C_d = discharge coefficient, as determined based on the C_d versus $Re^{\#}$ *equation in §1065.640(d)(2).*

C_f = flow coefficient, as determined in §1065.640(c)(2)(ii).

A_t = venturi throat cross-sectional area.

P_{in} = static absolute pressure at the venturi inlet.

Z = compressibility factor.

M_{mix} = molar mass of gas mixture.

R = molar gas constant.

T_{in} = absolute temperature at the venturi inlet.

Example:

A_t = 0.01824 m^2

p_{in} = 99.132 kPa = 99132 Pa = 99132 kg/(m·s^2)

Z = 1

M_{mix} = 28.7805 g/mol = 0.0287805 kg/mol

R = 8.314472 J/(mol·K) = 8.314472 (m^2·kg)/(s^2·mol·K)

T_{in} = 298.15 K

$Re^{\#}$ = 7.232·10^5

γ = 1.399

β = 0.8

Δp = 2.312 kPa

Using Eq. 1065.640–7, r_{ssv} = 0.997

Using Eq. 1065.640–6, C_f = 0.274

Using Eq. 1065.640–5, C_d = 0.990

$$\dot{n} = 0.990 \cdot 0.274 \cdot \frac{0.01824 \cdot 99132}{\sqrt{1 \cdot 0.0287805 \cdot 8.314472 \cdot 298.15}}$$

$\dot{n}$ = 58.173 mol/s

(c) *CFV molar flow rate.* If you use multiple venturis and you calibrate each venturi independently to determine a separate discharge coefficient, C_d (or calibration coefficient, K_v), for each venturi, calculate the individual molar flow rates through each venturi and sum all their flow rates to determine CFV flow rate, $\dot{n}$. If you use multiple venturis and you calibrated venturis in combination, calculate $\dot{n}$ using the sum of the active venturi throat areas as A_t, the square root of the sum of the squares of the active venturi throat diameters as d_t, and the ratio of the venturi throat to inlet diameters as the ratio of the square root of the sum of the active venturi throat diameters (d_t) to the diameter of the common entrance to all the venturis (D).

(1) To calculate $\dot{n}$ through one venturi or one combination of venturis, use its respective mean C_d and other constants you determined according to §1065.640 and calculate $\dot{n}$ as follows:

$$\dot{n} = C_d \cdot C_f \cdot \frac{A_t \cdot p_{in}}{\sqrt{Z \cdot M_{mix} \cdot R \cdot T_{in}}}$$

Eq. 1065.642-4

Example:
C_d = 0.985
C_f = 0.7219
A_t = 0.00456 m^2
p_{in} = 98.836 kPa = 98836 Pa = 98836 kg/(m·s^2)
Z = 1
M_{mix} = 28.7805 g/mol = 0.0287805 kg/mol
R = 8.314472 J/(mol·K) = 8.314472 (m^2·kg)/(s^2·mol·K)
T_{in} = 378.15 K

$$\dot{n} = 0.985 \cdot 0.7219 \cdot \frac{0.00456 \cdot 98836}{\sqrt{1 \cdot 0.0287805 \cdot 8.314472 \cdot 378.15}}$$

$\dot{n}$ = 33.690 mol/s

(2) To calculate the molar flow rate through one venturi or a combination of venturis, you may use its respective mean, K_v, and other constants you determined according to §1065.640 and calculate its molar flow rate $\dot{n}$ during an emission test. Note that if you follow the permissible ranges of dilution air dewpoint versus calibration air dewpoint in Table 3 of §1065.640, you may set $M_{mix\text{-}cal}$ and M_{mix} equal to 1. Calculate $\dot{n}$ as follows:

$$\dot{n} = \frac{K_v \cdot p_{in}}{\sqrt{T_{in}}} \cdot \frac{p_{std}}{T_{std} \cdot R} \cdot \frac{\sqrt{M_{mix\text{-}cal}}}{\sqrt{M_{mix}}}$$

Eq. 1065.642-5

Where:

$$K_v = \frac{V_{stdref} \cdot \sqrt{T_{in\text{-}cal}}}{p_{in\text{-}cal}}$$

Eq. 1065.642-6

V_{stdref} = volume flow rate of the standard at reference conditions of 293.15 K and 101.325 kPa.
$T_{in\text{-}cal}$ = venturi inlet temperature during calibration.
$P_{in\text{-}cal}$ = venturi inlet pressure during calibration.
$M_{mix\text{-}cal}$ = molar mass of gas mixture used during calibration.
M_{mix} = molar mass of gas mixture during the emission test calculated using Eq. 1065.640–9.

Example:
V_{stdref} = 0.4895 m^3

$T_{in\text{-}cal}$ = 302.52 K
$P_{in\text{-}cal}$ = 99.654 kPa = 99654 Pa = 99654 kg/(m·s²)
p_{in} = 98.836 kPa = 98836 Pa = 98836 kg/(m·s²)
p_{std} = 101.325 kPa = 101325 Pa = 101325 kg/(m·s²)
$M_{mix\text{-}cal}$ = 28.9656 g/mol = 0.0289656 kg/mol
M_{mix} = 28.7805 g/mol = 0.0287805 kg/mol
T_{in} = 353.15 K
T_{std} = 293.15 K
R = 8.314472 J/(mol·K) = 8.314472 (m²·kg)/(s²·mol·K)

$$K_v = \frac{0.4895 \cdot \sqrt{302.52}}{99654} = 0.000074954 \ \mathrm{m^4 \cdot s \cdot K^{0.5}/kg}$$

$$\dot{n} = \frac{0.000074954 \cdot 98936}{\sqrt{353.15}} \cdot \frac{101325}{293.15 \cdot 8.314472} \cdot \frac{\sqrt{0.0289656}}{\sqrt{0.0287805}}$$

$\dot{n}$ = 16.457 mol/s

[81 FR 74177, Oct. 25, 2016]

EFFECTIVE DATE NOTE: At 86 FR 34557, June 29, 2021, § 1065.642 was amended, effective July 29, 2021.

§ 1065.643 Carbon balance error verification calculations.

This section describes how to calculate quantities used in the carbon balance error verification described in § 1065.543. Paragraphs (a) through (c) of this section describe how to calculate the mass of carbon for a test interval from carbon-carrying fluid streams, intake air into the system, and exhaust emissions, respectively. Paragraph (d) of this section describes how to use these carbon masses to calculate four different quantities for evaluating carbon balance error. Use rectangular or trapezoidal integration methods to calculate masses and amounts over a test interval from continuously measured or calculated mass and molar flow rates.

(a) *Fuel and other fluids.* Determine the mass of fuel, DEF, and other carbon-carrying fluid streams, other than intake air, flowing into the system, m_{fluidj}, for each test interval. Note that § 1065.543 allows you to omit all flows other than fuel. You may determine the mass of DEF based on ECM signals for DEF flow rate. You may determine fuel mass during field testing based on ECM signals for fuel flow rate. Calculate the mass of carbon from the combined carbon-carrying fluid streams flowing into the system as follows:

$$m_{Cfluid} = \sum_{j=1}^{N} \left(w_{Cj} \cdot m_{fluidj} \right)$$

Eq. 1065.643-1

Where:

j = an indexing variable that represents one carbon-carrying fluid stream.

N = total number of carbon-carrying fluid streams into the system over the test interval.

w_C = carbon mass fraction of the carbon-carrying fluid stream as determined in § 1065.655(d).

m_{fluid} = the mass of the carbon-carrying fluid stream determined over the test interval.

Example:

N = 2
w_{Cfuel} = 0.869
w_{CDEF} = 0.065
m_{fuel} = 1119.6 g
m_{DEF} = 36.8 g

m_{Cfluid} = 0.869·1119.6 + 0.065·36.8 = 975.3 g

(b) *Intake air*. Calculate the mass of carbon in the intake air, m_{Cair}, for each test interval using one of the methods in this paragraph (b). The methods are listed in order of preference. Use the first method where all the inputs are available for your test configuration. For methods that calculate m_{Cair} based on the amount of CO_2 per mole of intake air, we recommend measuring intake air concentration, but you may calculate x_{CO2int} using Eq. 1065.655–10 and letting $x_{CO2intdry}$ = 375 μmol/mol.

(1) Calculate m_{Cair}, using the following equation if you measure intake air flow:

$$m_{Cair} = M_C \cdot n_{int} \cdot x_{CO2int}$$

Eq. 1065.643-2

Where:

M_C = molar mass of carbon.

n_{int} = measured amount of intake air over the test interval.

x_{CO2int} = amount of intake air CO_2 per mole of intake air.

Example:

M_C = 12.0107 g/mol

n_{int} = 62862 mol

x_{CO2int} = 369 μmol/mol = 0.000369 mol/mol

m_{Cair} = 12.0107·62862·0.000369 = 278.6 g

(2) Calculate m_{Cair}, using the following equation if you measure or calculate raw exhaust flow and you calculate chemical balance terms:

$$m_{Cair} = M_C \cdot n_{exh} \cdot \left(1 - x_{H2Oexh}\right) \cdot x_{CO2int} \cdot \left(x_{dil/exhdry} + x_{int/exhdry}\right)$$

Eq. 1065.643-3

Where:

M_C = molar mass of carbon.

n_{exh} = calculated or measured amount of raw exhaust over the test interval.

x_{H2Oexh} = amount of H_2O in exhaust per mole of exhaust.

x_{CO2int} = amount of intake air CO_2 per mole of intake air.

$x_{dil/exhdry}$ = amount of excess air per mole of dry exhaust. Note that excess air and intake air have the same composition, so $x_{CO2dil} = x_{CO2int}$ and $x_{H2Odil} = x_{H2Oint}$ for the chemical balance calculation for raw exhaust.

$x_{int/exhdry}$ = amount of intake air required to produce actual combustion products per mole of dry exhaust.

Example:

M_C = 12.0107 g/mol

n_{exh} = 62862 mol

x_{H2Oexh} = 0.034 mol/mol

x_{CO2int} = 369 μmol/mol = 0.000369 mol/mol

$x_{dil/exhdry}$ = 0.570 mol/mol

$x_{int/exhdry}$ = 0.465 mol/mol

m_{Cair} = 12.0107·62862·(1 − 0.034)·0.000369·(0.570 + 0.465) = 278.6 g

(3) Calculate m_{Cair}, using the following equation if you measure raw exhaust flow:

$$m_{\mathrm{Cair}} = M_{\mathrm{C}} \cdot n_{\mathrm{exh}} \cdot x_{\mathrm{CO2int}}$$

Eq. 1065.643-4

Where:

M_C = molar mass of carbon.

n_{exh} = measured amount of raw exhaust over the test interval.

x_{CO2int} = amount of intake air CO_2 per mole of intake air.

Example:

M_C = 12.0107 g/mol

n_{exh} = 62862 mol

x_{CO2int} = 369 μmol/mol = 0.000369 mol/mol

m_{Cair} = 12.0107·62862·0.000369 = 278.6 g

(4) Calculate m_{Cair}, using the following equation if you measure diluted exhaust flow and dilution air flow:

$$m_{\mathrm{Cair}} = M_{\mathrm{C}} \cdot \left(n_{\mathrm{dexh}} - n_{\mathrm{dil}}\right) \cdot x_{\mathrm{CO2int}}$$

Eq. 1065.643-5

Where:

M_C = molar mass of carbon.

n_{dexh} = measured amount of diluted exhaust over the test interval as determined in §1065.642.

n_{dil} = measured amount of dilution air over the test interval as determined in §1065.667(b).

x_{CO2int} = amount of intake air CO_2 per mole of intake air.

Example:

M_C = 12.0107 g/mol

n_{dexh} = 942930 mol

n_{dil} = 880068 mol

x_{CO2int} = 369 μmol/mol = 0.000369 mol/mol

m_{Cair} = 12.0107·(942930 − 880068)·0.000369 = 278.6 g

(5) Determined m_{Cair} based on ECM signals for intake air flow as described in paragraph (b)(1) of this section.

(6) If you measure diluted exhaust, determine m_{Cair} as described in paragraph (b)(4) of this section using a calculated amount of dilution air over the test interval as determined in §1065.667(d) instead of the measured amount of dilution air.

(c) *Exhaust emissions.* Calculate the mass of carbon in exhaust emissions, m_{Cexh}, for each test interval as follows:

$$m_{\mathrm{Cexh}} = M_{\mathrm{C}} \cdot \left(\frac{m_{\mathrm{CO2}}}{M_{\mathrm{CO2}}} + \frac{m_{\mathrm{CO}}}{M_{\mathrm{CO}}} + \frac{m_{\mathrm{THC}}}{M_{\mathrm{THC}}} \right)$$

Eq. 1065.643-6

Where:

M_C = molar mass of carbon.

m_{CO2} = mass of CO_2 over the test interval as determined in §1065.650(c).

M_{CO2} = molar mass of carbon dioxide.

m_{CO} = mass of CO over the test interval as determined in §1065.650(c).

M_{CO} = molar mass of carbon monoxide.

m_{THC} = mass of THC over the test interval as determined in §1065.650(c).

M_{THC} = effective C_1 molar mass of total hydrocarbon as defined in §1065.1005(f)(2).

Example:

M_C = 12.0107 g/mol
m_{CO2} = 4567 g
M_{CO2} = 44.0095 g/mol
m_{CO} = 0.803 g
M_{CO} = 28.0101 g/mol
m_{THC} = 0.537 g
M_{THC} = 13.875389 g/mol

$$m_{Cexh} = 12.0107 \cdot \left(\frac{4567}{44.0095} + \frac{0.803}{28.0101} + \frac{0.537}{13.875389} \right) = 1247.2 \text{ g}$$

(d) *Carbon balance error quantities.* Calculate carbon balance error quantities as follows:

(1) Calculate carbon mass absolute error, ε_{aC}, for a test interval as follows:

$$\epsilon_{aC} = m_{Cexh} - m_{Cfluid} - m_{Cair}$$

Eq. 1065.643-7

Where:

m_{Cexh} = mass of carbon in exhaust emissions over the test interval as determined in paragraph (d) of this section.

m_{Cfluid} = mass of carbon in all the carbon-carrying fluid streams flowing into the system over the test interval as determined in paragraph (a) of this section.

m_{Cair} = mass of carbon in the intake air flowing into the system over the test interval as determined in paragraph (b) of this section.

Example:

m_{Cexh} = 1247.2 g
m_{Cfluid} = 975.3 g
m_{Cair} = 278.6 g
$\grave{O}_{aC}$ = 1247.2 − 975.3 − 278.6 = −6.7 g

(2) Calculate carbon mass rate absolute error, $\in_{aCrate}$, for a test interval as follows:

$$\epsilon_{aCrate} = \frac{\epsilon_{aC}}{t}$$

Eq. 1065.643-8

Where:

t = duration of the test interval.

Example:

$\in_{aC}$ = −6.7 g
t = 1202.2 s = 0.3339 hr

$$\epsilon_{aCrate} = \frac{-6.7}{0.3339} = -20.065 \text{ g/hr}$$

(3) Calculate carbon mass relative error, ϵ_{rC}, for a test interval as follows:

$$\epsilon_{rC} = \frac{\epsilon_{aC}}{m_{Cfluid} + m_{Cair}}$$

Eq. 1065.643-9

Example:

ϵ_{aC} = −6.7 g

m_{Cfliud} = 975.3 g

m_{Cair} = 278.6 g

$$\epsilon_{rC} = \frac{-6.7}{975.3 + 278.6} = -0.0053$$

(4) Calculate composite carbon mass relative error, ϵ_{rCcomp}, for a duty cycle with multiple test intervals as follows:

(i) Calculate ϵ_{rCcomp} using the following equation:

$$\epsilon_{rCcomp} = \frac{\sum_{i=1}^{N} WF_i \cdot \frac{\left(m_{Cexhi} - m_{Cfluidi} - m_{Cairi}\right)}{t_i}}{\sum_{i=1}^{N} WF_i \cdot \frac{\left(m_{Cfluidi} + m_{Cairi}\right)}{t_i}}$$

Eq. 1065.643-10

Where:

i = an indexing variable that represents one test interval.

N = number of test intervals.

WF = weighting factor for the test interval as defined in the standard-setting part.

m_{Cexh} = mass of carbon in exhaust emissions over the test interval as determined in paragraph (c) of this section.

m_{Cfluid} = mass of carbon in all the carbon-carrying fluid streams that flowed into the system over the test interval as determined in paragraph (a) of this section.

m_{Cair} = mass of carbon in the intake air that flowed into the system over the test interval as determined in paragraph (b) of this section.

t = duration of the test interval. For duty cycles with multiple test intervals of a prescribed duration, such as cold-start and hot-start transient cycles, set t = 1 for all test intervals. For discrete-mode steady-state duty cycles with multiple test intervals of varying duration, set t equal to the actual duration of each test interval.

(ii) The following example illustrates calculation of ϵ_{rCcomp}, for cold-start and hot-start transient cycles:

N = 2

WF_1 = 1/7

WF_2 = 6/7

m_{Cexh1} = 1255.3 g

m_{Cexh2} = 1247.2 g

$m_{Cfluid1}$ = 977.8 g

$m_{Cfluid2}$ = 975.3 g

m_{Cair1} = 280.2 g

m_{Cair2} = 278.6 g

$$\epsilon_{rCcomp} = \frac{\frac{1}{7}\cdot\frac{(1255.3-977.8-280.2)}{1}+\frac{6}{7}\cdot\frac{(1247.2-975.3-278.6)}{1}}{\frac{1}{7}\cdot\frac{(977.8+280.2)}{1}+\frac{6}{7}\cdot\frac{(975.3+278.6)}{1}} = -0.0049$$

(iii) The following example illustrates calculation of ϵ_{rCcomp} for multiple test intervals with varying duration, such as discrete-mode steady-state duty cycles:

$N = 2$
$WF_1 = 0.85$
$WF_2 = 0.15$
$m_{Cexh1} = 2.873$ g
$m_{Cexh2} = 0.125$ g
$m_{Cfluid1} = 2.864$ g
$m_{Cfluid2} = 0.095$ g
$m_{Cair1} = 0.023$ g
$m_{Cair2} = 0.024$ g
$t_1 = 123$ s
$t_2 = 306$ s

$$\epsilon_{rCcomp} = \frac{0.85\cdot\left(\frac{2.873-2.864-0.023}{123}\right)+0.15\cdot\left(\frac{0.125-0.095-0.024}{306}\right)}{0.85\cdot\left(\frac{2.864+0.023}{123}\right)+0.15\cdot\left(\frac{0.095+0.024}{306}\right)} = -0.0047$$

EFFECTIVE DATE NOTE: At 86 FR 34557, June 29, 2021, § 1065.643 was added, effective July 29, 2021.

§ 1065.644 Vacuum-decay leak rate.

This section describes how to calculate the leak rate of a vacuum-decay leak verification, which is described in § 1065.345(e). Use the following equation to calculate the leak rate $\dot{n}_{leak}$, and compare it to the criterion specified in § 1065.345(e):

$$\dot{n}_{leak} = \frac{V_{vac}}{R}\cdot\frac{\left(\frac{p_2}{T_2}-\frac{p_1}{T_1}\right)}{(t_2-t_1)}$$

Eq. 1065.644-1

Where:

V_{vac} = geometric volume of the vacuum-side of the sampling system.
R = molar gas constant.
p_2 = vacuum-side absolute pressure at time t_2.
T_2 = vacuum-side absolute temperature at time t_2.
p_1 = vacuum-side absolute pressure at time t_1.
T_1 = vacuum-side absolute temperature at time t_1.
t_2 = time at completion of vacuum-decay leak verification test.
t_1 = time at start of vacuum-decay leak verification test.

Example:

V_{vac} = 2.0000 L = 0.00200 m^3
R = 8.314472 J/(mol · K) = 8.314472 (m^2 · kg)/(s^2 · mol · K)
p_2 = 50.600 kPa = 50600 Pa = 50600 kg/(m · s^2)
T_2 = 293.15 K
p_1 = 25.300 kPa = 25300 Pa = 25300 kg/(m · s^2)
T_1 = 293.15 K
t_2 = 10:57:35 a.m.
t_1 = 10:56:25 a.m.

$$\dot{n}_{\text{leak}} = \frac{0.0002}{8.314472} \cdot \frac{\left(\frac{50600}{293.15} - \frac{25300}{293.15}\right)}{(10:57:35 - 10:56:25)}$$

$$\dot{n}_{\text{leak}} = \frac{0.00200}{8.314472} \cdot \frac{86.304}{70}$$

$$\dot{n}_{\text{leak}} = 0.00030 \text{ mol/s}$$

[79 FR 23795, Apr. 28, 2014]

§ 1065.645 Amount of water in an ideal gas.

This section describes how to determine the amount of water in an ideal gas, which you need for various performance verifications and emission calculations. Use the equation for the vapor pressure of water in paragraph (a) of this section or another appropriate equation and, depending on whether you measure dewpoint or relative humidity, perform one of the calculations in paragraph (b) or (c) of this section. Paragraph (d) of this section provides an equation for determining dewpoint from relative humidity and dry bulb temperature measurements. The equations for the vapor pressure of water as presented in this section are derived from equations in ''Saturation Pressure of Water on the New Kelvin Temperature Scale'' (Goff, J.A., Transactions American Society of Heating and Air-Conditioning Engineers, Vol. 63, No. 1607, pages 347–354). Note that the equations were originally published to derive vapor pressure in units of atmospheres and have been modified to derive results in units of kPa by converting the last term in each equation.

(a) *Vapor pressure of water*. Calculate the vapor pressure of water for a given saturation temperature condition, T_{sat}, as follows, or use good engineering judgment to use a different relationship of the vapor pressure of water to a given saturation temperature condition:

(1) For humidity measurements made at ambient temperatures from (0 to 100) °C, or for humidity measurements made over super-cooled water at ambient temperatures from (−50 to 0) °C, use the following equation:

$$\log_{10}(p_{H2O}) = 10.79574 \cdot \left(1 - \frac{273.16}{T_{sat}}\right) - 5.02800 \cdot \log_{10}\left(\frac{T_{sat}}{273.16}\right) + 1.50475 \cdot 10^{-4} \cdot \left(1 - 10^{-8.2969 \cdot \left(\frac{T_{sat}}{273.16} - 1\right)}\right)$$
$$+0.42873 \cdot 10^{-3} \cdot \left(10^{4.76955 \cdot \left(1 - \frac{273.16}{T_{sat}}\right)} - 1\right) - 0.2138602$$

Eq. 1065.645-1

Where:

p_{H2O} = vapor pressure of water at saturation temperature condition, kPa.

T_{sat} = saturation temperature of water at measured conditions, K.

Example:

T_{sat} = 9.5 °C = 282.65 K

$$\log_{10}(p_{H2O}) = 10.79574 \cdot \left(1 - \frac{273.16}{282.65}\right) - 5.02800 \cdot \log_{10}\left(\frac{282.65}{273.16}\right) + 1.50475 \cdot 10^{-4} \cdot \left(1 - 10^{-8.2969 \cdot \left(\frac{282.65}{273.16} - 1\right)}\right)$$
$$+0.42873 \cdot 10^{-3} \cdot \left(10^{4.76955 \cdot \left(1 - \frac{273.16}{282.65}\right)} - 1\right) - 0.2138602$$

$\log_{10}(p_{H2O})$ = 0.074297

$p_{H2O} = 10^{0.074297}$ = 1.186581 kPa

(2) For humidity measurements over ice at ambient temperatures from (–100 to 0) °C, use the following equation:

$$\log_{10}(p_{H2O}) = -9.096853 \cdot \left(\frac{273.16}{T_{sat}} - 1\right) - 3.566506 \cdot \log_{10}\left(\frac{273.16}{T_{sat}}\right)$$
$$+0.876812 \cdot \left(1 - \frac{T_{sat}}{273.16}\right) - 0.2138602$$

Eq. 1065.645-2

Example:

$T_{ice} = -15.4\ °C = 257.75\ K$

$$\log_{10}(p_{H2O}) = -9.096853 \cdot \left(\frac{273.16}{257.75} - 1\right) - 3.566506 \cdot \log_{10}\left(\frac{273.16}{257.75}\right)$$
$$+0.876812 \cdot \left(1 - \frac{257.75}{273.16}\right) - 0.2138602$$

$\log_{10}(p_{H20}) = -0.798207$

$p_{H2O} = 10^{-0.79821} = 0.159145\ kPa$

(b) *Dewpoint*. If you measure humidity as a dewpoint, determine the amount of water in an ideal gas, x_{H20}, as follows:

$$x_{H2O} = \frac{p_{H2O}}{p_{abs}} \qquad \text{Eq. 1065.645-3}$$

Where:

x_{H20} = amount of water in an ideal gas.

p_{H20} = water vapor pressure at the measured dewpoint, $T_{sat} = T_{dew}$.

p_{abs} = wet static absolute pressure at the location of your dewpoint measurement.

Example: :

p_{abs} = 99.980 kPa

$T_{sat} = T_{dew}$ = 9.5 °C

Using Eq. 1065.645–1,

p_{H20} = 1.186581 kPa

x_{H2O} = 1.186581/99.980

x_{H2O} = 0.011868 mol/mol

(c) *Relative humidity*. If you measure humidity as a relative humidity, *RH*, determine the amount of water in an ideal gas, x_{H2O}, as follows:

$$x_{H2O} = \frac{RH \cdot p_{H2O}}{p_{abs}}$$

Eq. 1065.645-4

Where:

x_{H2O} = amount of water in an ideal gas.

RH = relative humidity.

p_{H2O} = water vapor pressure at 100% relative humidity at the location of your relative humidity measurement, $T_{sat} = T_{amb}$.

p_{abs} = wet static absolute pressure at the location of your relative humidity measurement.

Example:

RH = 50.77% = 0.5077

p_{abs} = 99.980 kPa

$T_{sat} = T_{amb}$ = 20 °C

Using Eq. 1065.645–1,

p_{H2O} = 2.3371 kPa

x_{H2O} = (0.5077 · 2.3371)/99.980

x_{H2O} = 0.011868 mol/mol

(d) *Dewpoint determination from relative humidity and dry bulb temperature.* This paragraph (d) describes how to calculate dewpoint temperature from relative humidity, *RH*. This is based on ''ITS–90 Formulations for Vapor Pressure, Frostpoint Temperature, Dewpoint Temperature, and Enhancement Factors in the Range −100 to + 100 °C'' (Hardy, B., The Proceedings of the Third International Symposium on Humidity & Moisture, Teddington, London, England, April 1998). Calculate p_{H20sat} as described in paragraph (a) of this section based on setting T_{sat} equal to T_{amb}. Calculate $p_{H20scaled}$ by multiplying p_{H20sat} by *RH*. Calculate the dewpoint, T_{dew}, from p_{H20} using the following equation:

$$T_{dew} = \frac{2.0798233 \cdot 10^{2} - 2.0156028 \cdot 10^{1} \cdot \ln\left(p_{H2O}\right) + 4.6778925 \cdot 10^{-1} \cdot \ln\left(p_{H2O}\right)^{2} - 9.2288067 \cdot 10^{-6} \cdot \ln\left(p_{H2O}\right)^{3}}{1 - 1.3319669 \cdot 10^{-1} \cdot \ln\left(p_{H2O}\right) + 5.6577518 \cdot 10^{-3} \cdot \ln\left(p_{H2O}\right)^{2} - 7.5172865 \cdot 10^{-5} \cdot \ln\left(p_{H2O}\right)^{3}}$$

Eq. 1065.645-5

Where:

$\ln(p_{H2O})$ = the natural log of $p_{H2Oscaled}$, which is the water vapor pressure scaled to the relative humidity at the location of the relative humidity measurement, $T_{sat} = T_{amb}$

Example:

RH = 39.61% = 0.3961

$T_{sat\ =\ Tamb}$ = 20.00 °C = 293.15K

Using Eq. 1065.645–1,

p_{H2Osat} = 2.3371 kPa

$p_{H2Oscaled}$ = (0.3961 · 2.3371) = 0.925717 kPa = 925.717 Pa

$$T_{dew} = \frac{2.0798233 \cdot 10^{2} - 2.0156028 \cdot 10^{1} \cdot \ln\left(925.717\right) + 4.6778925 \cdot 10^{-1} \cdot \ln\left(925.717\right)^{2} - 9.2288067 \cdot 10^{-6} \cdot \ln\left(925.717\right)^{3}}{1 - 1.3319669 \cdot 10^{-1} \cdot \ln\left(925.717\right) + 5.6577518 \cdot 10^{-3} \cdot \ln\left(925.717\right)^{2} - 7.5172865 \cdot 10^{-5} \cdot \ln\left(925.717\right)^{3}}$$

[73 FR 37327, June 30, 2008, as amended at 73 FR 59331, Oct. 8, 2008; 75 FR 23048, Apr. 30, 2010; 76 FR 57456, Sept. 15, 2011;79 FR 23796, Apr. 28, 2014; 81 FR 74179, Oct. 25, 2016]

§ 1065.650 Emission calculations.

(a) *General.* Calculate brake-specific emissions over each applicable duty cycle or test interval. For test intervals with zero work (or power), calculate the emission mass (or mass rate), but do not calculate brake-specific emissions. For duty cycles with multiple test intervals, refer to the standard-setting part for calculations you need to determine a composite result, such as a calculation that weights and sums the results of individual test

intervals in a duty cycle. If the standard-setting part does not include those calculations, use the equations in paragraph (g) of this section. This section is written based on rectangular integration, where each indexed value (*i.e.*, "$_i$") represents (or approximates) the mean value of the parameter for its respective time interval, delta-t. You may also integrate continuous signals using trapezoidal integration consistent with good engineering judgment.

(b) *Brake-specific emissions over a test interval.* We specify three alternative ways to calculate brake-specific emissions over a test interval, as follows:

(1) For any testing, you may calculate the total mass of emissions, as described in paragraph (c) of this section, and divide it by the total work generated over the test interval, as described in paragraph (d) of this section, using the following equation:

$$e = \frac{m}{W} \qquad \text{Eq. 1065.650-1}$$

Example:
m_{NOx} = 64.975 g
W = 25.783 kW · hr
e_{NOx} = 64.975/25.783
e_{NOx} = 2.520 g/(kW · hr)

(2) For discrete-mode steady-state testing, you may calculate the brake-specific emissions over a test interval using the ratio of emission mass rate to power, as described in paragraph (e) of this section, using the following equation:

$$e = \frac{\bar{\dot{m}}}{\bar{P}} \qquad \text{Eq. 1065.650-2}$$

(3) For field testing, you may calculate the ratio of total mass to total work, where these individual values are determined as described in paragraph (f) of this section. You may also use this approach for laboratory testing, consistent with good engineering judgment. Good engineering judgment dictates that this method not be used if there are any work flow paths described in § 1065.210 that cross the system boundary, other than the primary output shaft (crankshaft). This is a special case in which you use a signal linearly proportional to raw exhaust molar flow rate to determine a value proportional to total emissions. You then use the same linearly proportional signal to determine total work using a chemical balance of fuel, intake air, and exhaust as described in § 1065.655, plus information about your engine's brake-specific fuel consumption. Under this method, flow meters need not meet accuracy specifications, but they must meet the applicable linearity and repeatability specifications in subpart D or subpart J of this part. The result is a brake-specific emission value calculated as follows:

$$e = \frac{\tilde{m}}{\tilde{W}} \qquad \text{Eq. 1065.650-3}$$

Example:

$\tilde{m}$ = 805.5 g

$\tilde{W}$ = 52.102 kW · hr
e_{CO} = 805.5/52.102
e_{CO} = 2.520 g/(kW · hr)

(c) *Total mass of emissions over a test interval.* To calculate the total mass of an emission, multiply a concentration by its respective flow. For all systems, make preliminary calculations as described in paragraph (c)(1) of this section to correct concentrations. Next, use the method in paragraphs (c)(2) through (4) of this section that is appropriate for your system. Finally, if necessary, calculate the mass of NMHC as described in paragraph (c)(5) of this section for all systems. Calculate the total mass of emissions as follows:

(1) *Concentration corrections.* Perform the following sequence of preliminary calculations on recorded concentrations:

(i) Correct all gaseous emission analyzer concentration readings, including continuous readings, sample bag readings, and dilution air background readings, for drift as described in §1065.672. Note that you must omit this step where brake-specific emissions are calculated without the drift correction for performing the drift validation according to §1065.550(b). When applying the initial THC and CH_4 contamination readings according to §1065.520(f), use the same values for both sets of calculations. You may also use as-measured values in the initial set of calculations and corrected values in the drift-corrected set of calculations as described in §1065.520(f)(7).

(ii) Correct all THC and CH_4 concentrations for initial contamination as described in §1065.660(a), including continuous readings, sample bags readings, and dilution air background readings.

(iii) Correct all concentrations measured on a ''dry'' basis to a ''wet'' basis, including dilution air background concentrations, as described in §1065.659.

(iv) Calculate all NMHC and CH_4 concentrations, including dilution air background concentrations, as described in §1065.660.

(v) For emission testing with an oxygenated fuel, calculate any HC concentrations, including dilution air background concentrations, as described in §1065.665. See subpart I of this part for testing with oxygenated fuels.

(vi) Correct all the NO_X concentrations, including dilution air background concentrations, for intake-air humidity as described in §1065.670.

(2) *Continuous sampling.* For continuous sampling, you must frequently record a continuously updated concentration signal. You may measure this concentration from a changing flow rate or a constant flow rate (including discrete-mode steady-state testing), as follows:

(i) *Varying flow rate.* If you continuously sample from a changing exhaust flow rate, time align and then multiply concentration measurements by the flow rate from which you extracted it. Use good engineering judgment to time align flow and concentration data to match transformation time, t_{50}, to within ±1 s. We consider the following to be examples of changing flows that require a continuous multiplication of concentration times molar flow rate: Raw exhaust, exhaust diluted with a constant flow rate of dilution air, and CVS dilution with a CVS flowmeter that does not have an upstream heat exchanger or electronic flow control. This multiplication results in the flow rate of the emission itself. Integrate the emission flow rate over a test interval to determine the total emission. If the total emission is a molar quantity, convert this quantity to a mass by multiplying it by its molar mass, M. The result is the mass of the emission, m. Calculate m for continuous sampling with variable flow using the following equations:

$$m = M \cdot \sum_{i=1}^{N} x_i \cdot \dot{n}_i \cdot \Delta t \qquad \text{Eq. 1065.650-4}$$

Where:

$$\Delta t = 1/f_{\text{record}} \qquad \text{Eq. 1065.650-5}$$

Example:
M_{NMHC} = 13.875389 g/mol
N = 1200
x_{NMHC1} = 84.5 μmol/mol = 84.5 · 10^{-6} mol/mol
x_{NMHC2} = 86.0 μmol/mol = 86.0 · 10^{-6} mol/mol
$\dot{n}_{\text{exh1}}$ = 2.876 mol/s
$\dot{n}_{\text{exh2}}$ = 2.224 mol/s
f_{record} = 1 Hz
Using Eq. 1065.650–5,
Δt = 1/1 = 1 s
m_{NMHC} = 13.875389 · (84.5 · 10^{-6} · 2.876 + 86.0 · 10^{-6} · 2.224 + … + $x_{\text{NMHC1200}} \cdot \dot{n}_{\text{exh}}$) · 1
m_{NMHC} = 25.53 g

(ii) *Constant flow rate.* If you continuously sample from a constant exhaust flow rate, use the same emission calculations described in paragraph (c)(2)(i) of this section or calculate the mean or flow-weighted concentration recorded over the test interval and treat the mean as a batch sample, as described in paragraph (c)(3)(ii) of this section. We consider the following to be examples of constant exhaust flows: CVS diluted exhaust with a CVS flowmeter that has either an upstream heat exchanger, electronic flow control, or both.

(3) *Batch sampling.* For batch sampling, the concentration is a single value from a proportionally extracted batch sample (such as a bag, filter, impinger, or cartridge). In this case, multiply the mean concentration of the batch sample by the total flow from which the sample was extracted. You may calculate total flow by integrating a changing flow rate or by determining the mean of a constant flow rate, as follows:

(i) *Varying flow rate.* If you collect a batch sample from a changing exhaust flow rate, extract a sample proportional to the changing exhaust flow rate. We consider the following to be examples of changing flows that require proportional sampling: Raw exhaust, exhaust diluted with a constant flow rate of dilution air, and CVS dilution with a CVS flowmeter that does not have an upstream heat exchanger or electronic flow control. Integrate the flow rate over a test interval to determine the total flow from which you extracted the proportional sample. Multiply the mean concentration of the batch sample by the total flow from which the sample was extracted. If the total emission is a molar quantity, convert this quantity to a mass by multiplying it by its molar mass, M. The result is the mass of the emission, m. In the case of PM emissions, where the mean PM concentration is already in units of mass per mole of sample, $\bar{M}_{\text{PM}}$, simply multiply it by the total flow. The result is the total mass of PM, m_{PM}. Calculate m for batch sampling with variable flow using the following equation:

$$m = M \cdot \bar{x} \cdot \sum_{i=1}^{N} \dot{n}_{\text{i}} \cdot \Delta t \qquad \text{Eq. 1065.650-6}$$

Example:
M_{NOx} = 46.0055 g/mol
N = 9000
$\bar{x}_{\text{NOx}}$ = 85.6 μmol/mol = 85.6 · 10^{-6} mol/mol
$\dot{n}_{\text{dexh1}}$ = 25.534 mol/s
$\dot{n}_{\text{dexh2}}$ = 26.950 mol/s
f_{record} = 5 Hz
Using Eq. 1065.650–5,
Δt = 1/5 = 0.2
m_{NOx} = 46.0055 · 85.6 · 10^{-6} · (25.534 + 26.950 + … + $\dot{n}_{\text{exh9000}}$) · 0.2
m_{NOx} = 4.201 g

(ii) *Constant flow rate.* If you batch sample from a constant exhaust flow rate, extract a sample at a proportional or constant flow rate. We consider the following to be examples of constant exhaust flows: CVS diluted exhaust with a CVS flow meter that has either an upstream heat exchanger, electronic flow control, or both. Determine the mean molar flow rate from which you extracted the constant flow rate sample. Multiply the mean concentration of the batch sample by the mean molar flow rate of the exhaust from which the sample was extracted, and multiply the result by the time of the test interval. If the total emission is a molar quantity, convert this quantity to a mass by multiplying it by its molar mass, M. The result is the mass of the emission, m. In the case of PM emissions, where the mean PM concentration is already in units of mass

per mole of sample, $\bar{M}_{PM}$, simply multiply it by the total flow, and the result is the total mass of PM, m_{PM}. Calculate m for sampling with constant flow using the following equations:

$$m = M \cdot \bar{x} \cdot \bar{\dot{n}} \cdot \Delta t \qquad \text{Eq. 1065.650-7}$$

and for PM or any other analysis of a batch sample that yields a mass per mole of sample,

$$\bar{M} = M \cdot \bar{x} \qquad \text{Eq. 1065.650-8}$$

Example:

$\bar{M}_{PM}$ = 144.0 μg/mol = 144.0 · 10^{-6} g/mol
$\bar{\dot{n}}_{dexh}$ = 57.692 mol/s
Δt = 1200 s
m_{PM} = 144.0 · 10^{-6} · 57.692 · 1200
m_{PM} = 9.9692 g

(4) *Additional provisions for diluted exhaust sampling; continuous or batch.* The following additional provisions apply for sampling emissions from diluted exhaust:

(i) For sampling with a constant dilution ratio, *DR*, of diluted exhaust versus exhaust flow (*e.g.*, secondary dilution for PM sampling), calculate m using the following equation:

$$m_{PM} = m_{PMdil} \cdot DR \qquad \text{Eq. 1065.650-9}$$

Example:
m_{PMdil} = 6.853 g
DR = 6:1
m_{PM} = 6.853 · 6
m_{PM} = 41.118 g

(ii) For continuous or batch sampling, you may measure background emissions in the dilution air. You may then subtract the measured background emissions, as described in §1065.667.

(5) *Mass of NMHC.* Compare the corrected mass of NMHC to corrected mass of THC. If the corrected mass of NMHC is greater than 0.98 times the corrected mass of THC, take the corrected mass of NMHC to be 0.98 times the corrected mass of THC. If you omit the NMHC calculations as described in §1065.660(b)(1), take the corrected mass of NMHC to be 0.98 times the corrected mass of THC.

(6) *Mass of NMNEHC.* If the test fuel has less than 0.010 mol/mol of ethane and you omit the NMNEHC calculations as described in §1065.660(c)(1), take the corrected mass of NMNEHC to be 0.95 times the corrected mass of NMHC.

(d) *Total work over a test interval.* To calculate the total work from the engine over a test interval, add the total work from all the work paths described in §1065.210 that cross the system boundary including electrical energy/work, mechanical shaft work, and fluid pumping work. For all work paths, except the engine's primary output shaft (crankshaft), the total work for the path over the test interval is the integration of the net work flow rate (power) out of the system boundary. When energy/work flows into the system boundary, this work flow rate signal becomes negative; in this case, include these negative work rate values in the integration to calculate total work from that work path. Some work paths may result in a negative total work. Include negative total work values from any work path in the calculated total work from the engine rather than setting the values to zero. The rest of this paragraph (d) describes how to calculate total work from the engine's primary output shaft over a test interval. Before integrating power on the engine's primary output shaft, adjust the speed and torque data for the time alignment used in §1065.514(c). Any advance or delay used on the feedback signals for cycle validation must also be used for calculating work. Account for work of accessories according to §1065.110. Exclude any work during cranking and starting. Exclude work during actual motoring operation (negative feedback torques), unless the engine was connected to one or more energy storage devices. Examples of such

energy storage devices include hybrid powertrain batteries and hydraulic accumulators, like the ones illustrated in Figure 1 of § 1065.210. Exclude any work during reference zero-load idle periods (0% speed or idle speed with 0 N · m reference torque). Note, that there must be two consecutive reference zero load idle points to establish a period where this applies. Include work during idle points with simulated minimum torque such as Curb Idle Transmissions Torque (CITT) for automatic transmissions in ''drive''. The work calculation method described in paragraphs (b)(1) through (7) of this section meets these requirements using rectangular integration. You may use other logic that gives equivalent results. For example, you may use a trapezoidal integration method as described in paragraph (b)(8) of this section.

(1) Time align the recorded feedback speed and torque values by the amount used in § 1065.514(c).

(2) Calculate shaft power at each point during the test interval by multiplying all the recorded feedback engine speeds by their respective feedback torques.

(3) Adjust (reduce) the shaft power values for accessories according to § 1065.110.

(4) Set all power values during any cranking or starting period to zero. See § 1065.525 for more information about engine cranking.

(5) Set all negative power values to zero, unless the engine was connected to one or more energy storage devices. If the engine was tested with an energy storage device, leave negative power values unaltered.

(6) Set all power values to zero during idle periods with a corresponding reference torque of 0 N · m.

(7) Integrate the resulting values for power over the test interval. Calculate total work as follows:

$$W = \sum_{i=1}^{N} P_i \cdot \Delta t$$

Eq. 1065.650-10

Where:

W = total work from the primary output shaft.

P_i = instantaneous power from the primary output shaft over an interval i.

$$P_i = f_{ni} \cdot T_i$$

Eq. 1065.650-11

Where:

N = 9000

f_{n1} = 1800.2 r/min

f_{n2} = 1805.8 r/min

T_1 = 177.23 N · m

T_2 = 175.00 N · m

C_{rev} = 2 · π rad/r

C_{t1} = 60 s/min

C_p = 1000 (N · m · rad/s)/kW

f_{record} = 5 Hz

C_{t2} = 3600 s/hr

$$P_1 = \frac{1800.2 \cdot 177.23 \cdot 2 \cdot 3.14159}{60 \cdot 1000}$$

P_1 = 33.41 kW
P_2 = 33.09 kW
Δt = 1/5 = 0.2 s
Using Eq. 1065.650–5,

$$W = \frac{(33.41 + 33.09 + ... + P_{9000}) \cdot 0.2}{3600}$$

W = 16.875 kW · hr

(8) You may use a trapezoidal integration method instead of the rectangular integration described in this paragraph (d). To do this, you must integrate the fraction of work between points where the torque is positive. You may assume that speed and torque are linear between data points. You may not set negative values to zero before running the integration.

(e) *Steady-state mass rate divided by power.* To determine steady-state brake-specific emissions for a test interval as described in paragraph (b)(2) of this section, calculate the mean steady-state mass rate of the emission, $\overline{\dot{m}}$, and the mean steady-state power, $\bar{P}$ as follows:

(1) To calculate $\overline{\dot{m}}$, multiply its mean concentration, $\bar{x}$, by its corresponding mean molar flow rate, $\overline{\dot{n}}$. If the result is a molar flow rate, convert this quantity to a mass rate by multiplying it by its molar mass, M. The result is the mean mass rate of the emission, $\overline{\dot{m}}$. In the case of PM emissions, where the mean PM concentration is already in units of mass per mole of sample, $\bar{M}_{PM}$, simply multiply it by the mean molar flow rate, $\overline{\dot{n}}$. The result is the mass rate of PM, $\dot{m}_{PM}$. Calculate $\overline{\dot{m}}$ using the following equation:

$$\overline{\dot{m}} = M \cdot \bar{x} \cdot \overline{\dot{n}} \qquad \text{Eq. 1065.650-12}$$

(2) To calculate an engine's mean steady-state total power, $\bar{P}$, add the mean steady-state power from all the work paths described in §1065.210 that cross the system boundary including electrical power, mechanical shaft power, and fluid pumping power. For all work paths, except the engine's primary output shaft (crankshaft), the mean steady-state power over the test interval is the integration of the net work flow rate (power) out of the system boundary divided by the period of the test interval. When power flows into the system boundary, the power/work flow rate signal becomes negative; in this case, include these negative power/work rate values in the integration to calculate the mean power from that work path. Some work paths may result in a negative mean power. Include negative mean power values from any work path in the mean total power from the engine rather than setting these values to zero. The rest of this paragraph (e)(2) describes how to calculate the mean power from the engine's primary output shaft. Calculate $\bar{P}$ using Eq. 1065.650–13, noting that $\bar{P}$, $\bar{f}_n$, and $\bar{T}$ refer to mean power, mean rotational shaft frequency, and mean torque from the primary output shaft. Account for the power of simulated accessories according to §1065.110 (reducing the mean primary output shaft power or torque by the accessory power or torque). Set the power to zero during actual motoring operation (negative feedback torques), unless the engine was connected to one or more energy storage devices. Examples of such energy storage devices include hybrid powertrain batteries and hydraulic accumulators, like the ones illustrated in Figure 1 of §1065.210. Set the power to zero for modes with a zero reference load (0 N·m reference torque or 0 kW reference power). Include power during idle modes with simulated minimum torque or power.

$$\overline{P} = \overline{f}_{\mathrm{n}} \cdot \overline{T}$$

Eq. 1065.650-13

(3) Divide emission mass rate by power to calculate a brake-specific emission result as described in paragraph (b)(2) of this section.

(4) The following example shows how to calculate mass of emissions using mean mass rate and mean power:

M_{CO} = 28.0101 g/mol
$\overline{\tilde{x}}_{CO}$ = 12.00 mmol/mol = 0.01200 mol/mol
$\overline{\tilde{n}}$ = 1.530 mol/s
$\overline{f}_n$ = 3584.5 r/min = 375.37 rad/s
$\overline{T}$ = 121.50 N · m
$\overline{\tilde{m}}$ = 28.0101 · 0.01200 · 1.530
$\overline{\tilde{m}}$ = 0.514 g/s = 1850.4 g/hr
$\overline{P}$ = 121.5 · 375.37
$\overline{P}$ = 45607 W
$\overline{P}$ = 45.607 kW
e_{CO} = 1850.4/45.61
e_{CO} = 40.57 g/(kW · hr)

(f) *Ratio of total mass of emissions to total work.* To determine brake-specific emissions for a test interval as described in paragraph (b)(3) of this section, calculate a value proportional to the total mass of each emission. Divide each proportional value by a value that is similarly proportional to total work.

(1) *Total mass.* To determine a value proportional to the total mass of an emission, determine total mass as described in paragraph (c) of this section, except substitute for the molar flow rate, $\dot{n}$, or the total flow, n, with a signal that is linearly proportional to molar flow rate, $\tilde{\dot{n}}$, or linearly proportional to total flow, $\tilde{n}$ as follows:

$$\tilde{\dot{m}}_{\mathrm{fueli}} = \frac{1}{w_{\mathrm{fuel}}} \cdot \frac{M_{\mathrm{C}} \cdot \tilde{\dot{n}}_{\mathrm{i}} \cdot x_{\mathrm{Ccombdryi}}}{1 + x_{\mathrm{H2Oexhdryi}}} \qquad \text{Eq. 1065.650-14}$$

(2) *Total work.* To calculate a value proportional to total work over a test interval, integrate a value that is proportional to power. Use information about the brake-specific fuel consumption of your engine, e_{fuel}, to convert a signal proportional to fuel flow rate to a signal proportional to power. To determine a signal proportional to fuel flow rate, divide a signal that is proportional to the mass rate of carbon products by the fraction of carbon in your fuel, w_{C}. You may use a measured w_{C} or you may use default values for a given fuel as described in §1065.655(e). Calculate the mass rate of carbon from the amount of carbon and water in the exhaust, which you determine with a chemical balance of fuel, intake air, and exhaust as described in §1065.655. In the chemical balance, you must use concentrations from the flow that generated the signal proportional to molar flow rate, $\tilde{\dot{n}}$, in paragraph (e)(1) of this section. Calculate a value proportional to total work as follows:

$$W = \sum_{i=1}^{N} \tilde{P}_i \cdot \Delta t$$

Eq. 1065.650-15

Where:

$$\tilde{P}_{\mathrm{i}} = \frac{\tilde{\dot{m}}_{\mathrm{fueli}}}{e_{\mathrm{fuel}}}$$

Eq. 1065.650-16

(3) *Brake-specific emissions*. Divide the value proportional to total mass by the value proportional to total work to determine brake-specific emissions, as described in paragraph (b)(3) of this section.

(4) Example: The following example shows how to calculate mass of emissions using proportional values:

N = 3000
f_{record} = 5 Hz
e_{fuel} = 285 g/(kW·hr)
w_{fuel} = 0.869 g/g
M_{C} = 12.0107 g/mol
$\tilde{\dot{n}}_1$ = 3.922 mol/s = 14119.2 mol/hr
$x_{\mathrm{Ccombdry1}}$ = 91.634 mmol/mol = 0.091634 mol/mol
x_{H2Oexh1} = 27.21 mmol/mol = 0.02721 mol/mol
Using Eq. 1065.650–5,
Δt = 0.2 s

$$\tilde{W} = \frac{12.0107\left(\frac{3.922 \cdot 0.091634}{1+0.02721} + \frac{\tilde{\dot{n}}_2 \cdot x_{\mathrm{Ccombdry2}}}{1+x_{\mathrm{H2Oexh2}}} + \ldots + \frac{\tilde{\dot{n}}_{3000} \cdot x_{\mathrm{Ccombdry3000}}}{1+x_{\mathrm{H2Oexh3000}}}\right) \cdot 0.2}{285 \cdot 0.869}$$

$\tilde{W}$ = 5.09 (kW·hr)

(g) *Brake-specific emissions over a duty cycle with multiple test intervals*. The standard-setting part may specify a duty cycle with multiple test intervals, such as with discrete-mode steady-state testing. Unless we specify otherwise, calculate composite brake-specific emissions over the duty cycle as described in this paragraph (g). If a measured mass (or mass rate) is negative, set it to zero for calculating composite brake-specific emissions, but leave it unchanged for drift validation. In the case of calculating composite brake-specific emissions relative to a combined emission standard (such as a NO_X + NMHC standard), change any negative mass (or mass rate) values to zero for a particular pollutant before combining the values for the different pollutants.

(1) Use the following equation to calculate composite brake-specific emissions for duty cycles with multiple test intervals all with prescribed durations, such as cold-start and hot-start transient cycles:

$$e_{\mathrm{composite}} = \frac{\sum_{i=1}^{N} WF_i \cdot m_i}{\sum_{i=1}^{N} WF_i \cdot W_i} \qquad \text{Eq. 1065.650-17}$$

Where:

i = test interval number.
N = number of test intervals.
WF = weighting factor for the test interval as defined in the standard-setting part.
m = mass of emissions over the test interval as determined in paragraph (c) of this section.
W = total work from the engine over the test interval as determined in paragraph (d) of this section.

Example:
$N = 2$
$WF_1 = 0.1428$
$WF_2 = 0.8572$
$m_1 = 70.125$ g
$m_2 = 64.975$ g
$W_1 = 25.783$ kW · hr
$W_2 = 25.783$ kW · hr

$$e_{\mathrm{NO}_x\mathrm{composite}} = \frac{(0.1428 \cdot 70.125) + (0.8572 \cdot 64.975)}{(0.1428 \cdot 25.783) + (0.8572 \cdot 25.783)}$$

$e_{\mathrm{NOxcomposite}} = 2.548$ g/kW · hr

(2) Calculate composite brake-specific emissions for duty cycles with multiple test intervals that allow use of varying duration, such as discrete-mode steady-state duty cycles, as follows:

(i) Use the following equation if you calculate brake-specific emissions over test intervals based on total mass and total work as described in paragraph (b)(1) of this section:

$$e_{\mathrm{composite}} = \frac{\sum_{i=1}^{N} WF_i \cdot \frac{m_i}{t_i}}{\sum_{i=1}^{N} WF_i \cdot \frac{W_i}{t_i}} \qquad \text{Eq. 1065.650-18}$$

Where:

i = test interval number.
N = number of test intervals.
WF = weighting factor for the test interval as defined in the standard-setting part.
m = mass of emissions over the test interval as determined in paragraph (c) of this section.
W = total work from the engine over the test interval as determined in paragraph (d) of this section.
t = duration of the test interval.

Example:
$N = 2$
$WF_1 = 0.85$
$WF_2 = 0.15$
$m_1 = 1.3753$ g
$m_2 = 0.4135$ g
$t_1 = 120$ s
$t_2 = 200$ s
$W_1 = 2.8375$ kW · hr
$W_2 = 0.0$ kW · hr

$$e_{\mathrm{NO}_x\mathrm{composite}} = \frac{\left(0.85 \cdot \frac{1.3753}{120}\right) + \left(0.15 \cdot \frac{0.4135}{200}\right)}{\left(0.85 \cdot \frac{2.8375}{120}\right) + \left(0.15 \cdot \frac{0.0}{200}\right)}$$

$e_{\mathrm{NOxcomposite}} = 0.5001$ g/kW · hr

(ii) Use the following equation if you calculate brake-specific emissions over test intervals based on the ratio of mass rate to power as described in paragraph (b)(2) of this section:

$$e_{\text{composite}} = \frac{\sum_{i=1}^{N} WF_i \cdot \overline{\dot{m}}_i}{\sum_{i=1}^{N} WF_i \cdot \overline{P}_i}$$

Eq. 1065.650-19

Where:

i = test interval number.

N = number of test intervals.

WF = weighting factor for the test interval as defined in the standard-setting part.

$\overline{\dot{m}}$ = mean steady-state mass rate of emissions over the test interval as determined in paragraph (e) of this section.

$\bar{P}$ = mean steady-state power over the test interval as described in paragraph (e) of this section.

Example:

$N = 2$

$WF_1 = 0.85$

$WF_2 = 0.15$

$\overline{\dot{m}}_1 = 2.25842$ g/hr

$\overline{\dot{m}}_2 = 0.063443$ g/hr

$\bar{P}_1 = 4.5383$ kW

$\bar{P}_2 = 0.0$ kW

$$e_{\text{NO}_x\text{composite}} = \frac{(0.85 \cdot 2.25842) + (0.15 \cdot 0.063443)}{(0.85 \cdot 4.5383) + (0.15 \cdot 0.0)}$$

$e_{\text{NOxcomposite}} = 0.5001$ g/kW·hr

(h) *Rounding*. Round the final brake-specific emission values to be compared to the applicable standard only after all calculations are complete (including any drift correction, applicable deterioration factors, adjustment factors, and allowances) and the result is in g/(kW · hr) or units equivalent to the units of the standard, such as g/(hp · hr). *See* the definition of ''Round'' in § 1065.1001.

[73 FR 37328, June 30, 2008, as amended at 73 FR 59332, Oct. 8, 2008; 75 FR 23048, Apr. 30, 2010; 76 FR 57457, Sept. 15, 2011;79 FR 23799, Apr. 28, 2014; 80 FR 9118, Feb. 19, 2015; 81 FR 74180, Oct. 25, 2016]

EFFECTIVE DATE NOTE: At 86 FR 34560, June 29, 2021, § 1065.650 was amended, effective July 29, 2021.

§ 1065.655 Chemical balances of fuel, intake air, and exhaust.

(a) *General*. Chemical balances of fuel, intake air, and exhaust may be used to calculate flows, the amount of water in their flows, and the wet concentration of constituents in their flows. With one flow rate of either fuel, intake air, or exhaust, you may use chemical balances to determine the flows of the other two. For example, you may use chemical balances along with either intake air or fuel flow to determine raw exhaust flow. Note that chemical balance calculations require measured values for the flow rate of diesel exhaust fluid, if applicable.

(b) *Procedures that require chemical balances*. We require chemical balances when you determine the following:

(1) A value proportional to total work, $\tilde{W}$, when you choose to determine brake-specific emissions as described in § 1065.650(f).

(2) Raw exhaust molar flow rate either from measured intake air molar flow rate or from fuel mass flow rate as described in paragraph (f) of this section.

(3) Raw exhaust molar flow rate from measured intake air molar flow rate and dilute exhaust molar flow rate, as described in paragraph (g) of this section.

(4) The amount of water in a raw or diluted exhaust flow, χ_{H2Oexh}, when you do not measure the amount of water to correct for the amount of water removed by a sampling system. Correct for removed water according to § 1065.659.

(5) The calculated total dilution air flow when you do not measure dilution air flow to correct for background emissions as described in § 1065.667(c) and (d).

(c) *Chemical balance procedure.* The calculations for a chemical balance involve a system of equations that require iteration. We recommend using a computer to solve this system of equations. You must guess the initial values of up to three quantities: The amount of water in the measured flow, χ_{H2Oexh}, fraction of dilution air in diluted exhaust, $\chi_{dil/exh}$, and the amount of products on a C_1 basis per dry mole of dry measured flow, $\chi_{Ccombdry}$. You may use time-weighted mean values of combustion air humidity and dilution air humidity in the chemical balance; as long as your combustion air and dilution air humidities remain within tolerances of ±0.0025 mol/mol of their respective mean values over the test interval. For each emission concentration, χ, and amount of water, χ_{H2Oexh}, you must determine their completely dry concentrations, χ_{dry} and $\chi_{H2Oexhdry}$. You must also use your fuel mixture's atomic hydrogen-to-carbon ratio, α, oxygen-to-carbon ratio, β, sulfur-to-carbon ratio, γ, and nitrogen-to-carbon ratio, δ, you may optionally account for diesel exhaust fluid (or other fluids injected into the exhaust), if applicable. You may calculate α, β, γ, and δ; based on measured fuel and diesel exhaust fluid composition or you may use default values as described in paragraph (e) of this section. Use the following steps to complete a chemical balance:

(1) Convert your measured concentrations such as, $x_{CO2meas}$, x_{NOmeas}, and x_{H2Oint}, to dry concentrations by dividing them by one minus the amount of water present during their respective measurements; for example: $x_{H2OxCO2meas}$, $x_{H2OxNOmeas}$, and x_{H2Oint}. If the amount of water present during a ''wet'' measurement is the same as the unknown amount of water in the exhaust flow, x_{H2Oexh}, iteratively solve for that value in the system of equations. If you measure only total NO_X and not NO and NO_2 separately, use good engineering judgment to estimate a split in your total NO_X concentration between NO and NO_2 for the chemical balances. For example, if you measure emissions from a stoichiometric spark-ignition engine, you may assume all NO_X is NO. For a compression-ignition engine, you may assume that your molar concentration of NO_X, x_{NOx}, is 75% NO and 25% NO_2. For NO_2 storage aftertreatment systems, you may assume x_{NOx} is 25% NO and 75% NO_2. Note that for calculating the mass of NO_X emissions, you must use the molar mass of NO_2 for the effective molar mass of all NO_X species, regardless of the actual NO_2 fraction of NO_X.

(2) Enter the equations in paragraph (c)(4) of this section into a computer program to iteratively solve for x_{H2Oexh}, $x_{Ccombdry}$, and $x_{dil/exh}$. Use good engineering judgment to guess initial values for x_{H2Oexh}, $x_{Ccombdry}$, and $x_{dil/exh}$. We recommend guessing an initial amount of water that is about twice the amount of water in your intake or dilution air. We recommend guessing an initial value of $x_{Ccombdry}$ as the sum of your measured CO_2, CO, and THC values. We also recommend guessing an initial $x_{dil/exh}$ between 0.75 and 0.95, such as 0.8. Iterate values in the system of equations until the most recently updated guesses are all within ±1% of their respective most recently calculated values.

(3) Use the following symbols and subscripts in the equations for performing the chemical balance calculations in this paragraph (c):

$x_{dil/exh}$ = amount of dilution gas or excess air per mole of exhaust.

x_{H2Oexh} = amount of H_2O in exhaust per mole of exhaust.

$x_{Ccombdry}$ = amount of carbon from fuel in the exhaust per mole of dry exhaust.

x_{H2dry} = amount of H_2 in exhaust per amount of dry exhaust.

K_{H2Ogas} = water-gas reaction equilibrium coefficient. You may use 3.5 or calculate your own value using good engineering judgment.

$x_{H2Oexhdry}$ = amount of H_2O in exhaust per dry mole of dry exhaust.

$x_{prod/intdry}$ = amount of dry stoichiometric products per dry mole of intake air.

$x_{dil/exhdry}$ = amount of dilution gas and/or excess air per mole of dry exhaust.

$x_{int/exhdry}$ = amount of intake air required to produce actual combustion products per mole of dry (raw or diluted) exhaust.

$x_{raw/exhdry}$ = amount of undiluted exhaust, without excess air, per mole of dry (raw or diluted) exhaust.

x_{O2int} = amount of intake air O_2 per mole of intake air.

$x_{CO2intdry}$ = amount of intake air CO_2 per mole of dry intake air. You may use $\chi_{CO2intdry}$ = 375 μmol/mol, but we recommend measuring the actual concentration in the intake air.

$x_{H2Ointdry}$ = amount of intake air H_2O per mole of dry intake air.

x_{CO2int} = amount of intake air CO_2 per mole of intake air.

x_{CO2dil} = amount of dilution gas CO_2 per mole of dilution gas.

$x_{CO2dildry}$ = amount of dilution gas CO_2 per mole of dry dilution gas. If you use air as diluent, you may use $\chi_{CO2dildry}$ = 375 μmol/mol, but we recommend measuring the actual concentration in the intake air.

$x_{H2Odildry}$ = amount of dilution gas H_2O per mole of dry dilution gas.

x_{H2Odil} = amount of dilution gas H_2O per mole of dilution gas.

$x_{[emission]meas}$ = amount of measured emission in the sample at the respective gas analyzer.

$x_{[emission]dry}$ = amount of emission per dry mole of dry sample.

$x_{H2O[emission]meas}$ = amount of H_2O in sample at emission-detection location. Measure or estimate these values according to §1065.145(e)(2).

x_{H2Oint} = amount of H_2O in the intake air, based on a humidity measurement of intake air.

α = atomic hydrogen-to-carbon ratio of the fuel (or mixture of test fuels) and any injected fluids.

β = atomic oxygen-to-carbon ratio of the fuel (or mixture of test fuels) and any injected fluids.

γ = atomic sulfur-to-carbon ratio of the fuel (or mixture of test fuels) and any injected fluids.

δ = atomic nitrogen-to-carbon ratio of the fuel (or mixture of test fuels) and any injected fluids.

(4) Use the following equations to iteratively solve for $x_{dil/exh}$, x_{H2Oexh}, and $x_{Ccombdry}$:

$$x_{dil/exh} = 1 - \frac{x_{raw/exhdry}}{1 + x_{H2Oexhdry}} \quad \text{Eq. 1065.655-1}$$

$$x_{H2Oexh} = \frac{x_{H2Oexhdry}}{1 + x_{H2Oexhdry}} \quad \text{Eq. 1065.655-2}$$

$$x_{Ccombdry} = x_{CO2dry} + x_{COdry} + x_{THCdry} - x_{CO2dil} \cdot x_{dil/exhdry} - x_{CO2int} \cdot x_{int/exhdry} \quad \text{Eq. 1065.655-3}$$

$$x_{H2dry} = \frac{x_{COdry} \cdot \left(x_{H2Oexhdry} - x_{H2Odil} \cdot x_{dil/exhdry}\right)}{K_{H2O\text{-}gas} \cdot \left(x_{CO2dry} - x_{CO2dil} \cdot x_{dil/exhdry}\right)} \quad \text{Eq. 1065.655-4}$$

$$x_{H2Oexhdry} = \frac{\alpha}{2}\left(x_{Ccombdry} - x_{THCdry}\right) + x_{H2Odil} \cdot x_{dil/exhdry} + x_{H2Oint} \cdot x_{int/exhdry} - x_{H2dry} \quad \text{Eq. 1065.655-5}$$

$$x_{dil/exhdry} = \frac{x_{dil/exh}}{1 - x_{H2Oexh}} \quad \text{Eq. 1065.655-6}$$

$$x_{int/exhdry} = \frac{1}{2 \cdot x_{O2int}}\left(\left(\frac{\alpha}{2} - \beta + 2 + 2\gamma\right)\left(x_{Ccombdry} - x_{THCdry}\right) - \left(x_{COdry} - x_{NOdry} - 2x_{NO2dry} + x_{H2dry}\right)\right) \quad \text{Eq. 1065.655-7}$$

$$x_{raw/exhdry} = \frac{1}{2}\left(\left(\frac{\alpha}{2} + \beta + \delta\right)\left(x_{Ccombdry} - x_{THCdry}\right) + \left(2x_{THCdry} + x_{COdry} - x_{NO2dry} + x_{H2dry}\right)\right) + x_{int/exhdry} \quad \text{Eq. 1065.655-8}$$

$$x_{O2int} = \frac{0.209820 - x_{CO2intdry}}{1 + x_{H2Ointdry}} \quad \text{Eq. 1065.655-9}$$

$$x_{CO2int} = \frac{x_{CO2intdry}}{1 + x_{H2Ointdry}} \quad \text{Eq. 1065.655-10}$$

$$x_{H2Ointdry} = \frac{x_{H2Oint}}{1 - x_{H2Oint}} \quad \text{Eq. 1065.655-11}$$

$$x_{CO2dil} = \frac{x_{CO2dildry}}{1 + x_{H2Odildry}} \quad \text{Eq. 1065.655-12}$$

$$x_{H2Odildry} = \frac{x_{H2Odil}}{1 - x_{H2Odil}} \quad \text{Eq. 1065.655-13}$$

$$x_{COdry} = \frac{x_{COmeas}}{1 - x_{H2OCOmeas}} \quad \text{Eq. 1065.655-14}$$

$$x_{CO2dry} = \frac{x_{CO2meas}}{1 - x_{H2OCO2meas}} \quad \text{Eq. 1065.655-15}$$

$$x_{NOdry} = \frac{x_{NOmeas}}{1 - x_{H2ONOmeas}} \quad \text{Eq. 1065.655-16}$$

$$x_{NO2dry} = \frac{x_{NO2meas}}{1 - x_{H2ONO2meas}} \quad \text{Eq. 1065.655-17}$$

$$x_{THCdry} = \frac{x_{THCmeas}}{1 - x_{H2OTHCmeas}} \quad \text{Eq. 1065.655-18}$$

(5) The following example is a solution for $x_{dil/exh,x}$, x_{H2Oexh}, and $x_{Ccombdry}$ using the equations in paragraph (c)(4) of this section:

$$x_{dil/exh} = 1 - \frac{0.184}{1 + \frac{35.37}{1000}} = 0.822\, mol/mol$$

$$x_{\mathrm{H2Oexh}} = \frac{35.37}{1+\frac{35.37}{1000}} = 34.16\,mmol/mol$$

$$x_{\mathrm{Ccombdry}} = 0.0252 + \frac{29.3}{1000000} + \frac{47.6}{1000000} - \frac{0.371}{1000}\cdot 0.851 - \frac{0.369}{1000}\cdot 0.172 = 0.0249\,mol/mol$$

$$x_{\mathrm{H2dry}} = \frac{29.3\cdot(0.034 - 0.012\cdot 0.851)}{3.5\cdot\left(\frac{25.2}{1000} - \frac{0.371}{1000}\cdot 0.851\right)} = 8.5\,\mu mol/mol$$

$$x_{\mathrm{H2Oexhdry}} = \frac{1.8}{2}\left(0.0249 - \frac{47.6}{1000000}\right) + 0.012\cdot 0.851 + 0.017\cdot 0.172 - \frac{8.5}{1000000} = 0.0353\,mol/mol$$

$$x_{\mathrm{dil/exhdry}} = \frac{0.822}{1\text{-}0.034} = 0.851\,mol/mol$$

$$x_{\mathrm{int/exhdry}} = \frac{1}{2\cdot 0.206}\left(\begin{array}{l}\left(\frac{1.8}{2} - 0.050 + 2 + 2\cdot 0.0003\right)\left(0.0249 - \frac{47.6}{1000000}\right) - \\ \left(\frac{29.3}{1000000} - \frac{50.4}{1000000} - 2\cdot\frac{12.1}{1000000} + \frac{8.5}{1000000}\right)\end{array}\right) = 0.172\,mol/mol$$

$$x_{\mathrm{raw/exhdry}} = \frac{1}{2}\left(\begin{array}{l}\left(\frac{1.8}{2} + 0.050 + 0.0001\right)\left(0.0249 - \frac{47.6}{1000000}\right) + \\ \left(2\cdot\frac{47.6}{1000000} + \frac{29.3}{1000000} - \frac{12.1}{1000000} + \frac{8.5}{1000000}\right)\end{array}\right) + 0.172 = 0.184\,mol/mol$$

$$x_{\mathrm{O2int}} = \frac{0.209820 - 0.000375}{1 + \frac{17.22}{1000}} = 0.206\,mol/mol$$

$$x_{\mathrm{CO2int}} = \frac{0.000375\cdot 1000}{1+\frac{17.22}{1000}} = 0.369\,mmol/mol$$

$$x_{\mathrm{H2Ointdry}} = \frac{16.93}{1 - \frac{16.93}{1000}} = 17.22\,mmol/mol$$

$$x_{\mathrm{CO2dil}} = \frac{0.375}{1 + \frac{12.01}{1000}} = 0.371\,mmol/mol$$

$$x_{\mathrm{H2Odildry}} = \frac{11.87}{1 - \frac{11.87}{1000}} = 12.01\,mmol/mol$$

$$x_{\mathrm{COdry}} = \frac{29.0}{1 - \frac{8.601}{1000}} = 29.3\,mmol/mol$$

$$x_{\mathrm{CO2dry}} = \frac{24.98}{1 - \frac{8.601}{1000}} = 25.2\,mmol/mol$$

$$x_{\mathrm{NOdry}} = \frac{50.0}{1 - \frac{8.601}{1000}} = 50.4\,mmol/mol$$

$$x_{\mathrm{NO2dry}} = \frac{12.0}{1 - \frac{8.601}{1000}} = 12.1\,mmol/mol$$

$$x_{\mathrm{THCdry}} = \frac{46}{1 - \frac{34.16}{1000}} = 47.6\,mmol/mol$$

$\alpha = 1.8$
$\beta = 0.05$
$\gamma = 0.0003$
$\delta = 0.0001$

(d) *Carbon mass fraction of fuel.* Determine carbon mass fraction of fuel, w_C, based on the fuel properties as determined in paragraph (e) of this section,

accounting for diesel exhaust fluid's contribution to α, β, γ, and δ, or that of any other fluid injected into the exhaust, if applicable. Calculate w_C using the following equation:

$$w_C = \frac{1 \cdot M_C}{1 \cdot M_C + \alpha \cdot M_H + \beta \cdot M_O + \gamma \cdot M_S + \delta \cdot M_N}$$

Eq. 1065.655-19

Where:

w_C = carbon mass fraction of the fuel (or mixture of test fuels) and any injected fluids.

M_C = molar mass of carbon.

α = atomic hydrogen-to-carbon ratio of the fuel (or mixture of test fuels) and any injected fluids.

M_H = molar mass of hydrogen.

β = atomic oxygen-to-carbon ratio of the fuel (or mixture of test fuels) and any injected fluids.

M_O = molar mass of oxygen.

γ = atomic sulfur-to-carbon ratio of the fuel (or mixture of test fuels) and any injected fluids.

M_S = molar mass of sulfur.

δ = atomic nitrogen-to-carbon ratio of the fuel (or mixture of test fuels) and any injected fluids.

M_N = molar mass of nitrogen.

Example:

$\alpha = 1.8$

$\beta = 0.05$

$\gamma = 0.0003$

$\delta = 0.0001$

$M_C = 12.0107$

$M_H = 1.00794$

$M_O = 15.9994$

$M_S = 32.065$

$M_N = 14.0067$

$$w_C = \frac{1 \cdot 12.0107}{1 \cdot 12.0107 + 1.8 \cdot 1.00794 + 0.05 \cdot 15.9994 + 0.0003 \cdot 32.065 + 0.0001 \cdot 14.0067}$$

$w_C = 0.8206$

(e) *Fuel and diesel exhaust fluid composition.* Determine fuel and diesel exhaust fluid composition represented by α, β, γ, and δ as described in this paragraph (e). When using measured fuel or diesel exhaust fluid properties, you must determine values for α and β; in all cases. If you determine compositions based on measured values and the default value listed in Table 1 of this section is zero, you may set γ and δ to zero; otherwise determine γ and δ (along with α and β) based on measured values. Determine elemental mass fractions and values for α, β, γ, and δ as follows:

(1) For liquid fuels, use the default values for α, β, γ, and δ in Table 1 of this section or determine mass fractions of liquid fuels for calculation of α, β, γ, and δ as follows:

(i) Determine the carbon and hydrogen mass fractions according to ASTM D5291 (incorporated by reference in §1065.1010). When using ASTM D5291 to determine carbon and hydrogen mass fractions of gasoline (with or without blended ethanol), use good engineering judgment to adapt the method as appropriate. This may include consulting with the instrument manufacturer on how to test high-volatility fuels. Allow the weight of volatile fuel samples to stabilize for 20 minutes before starting the analysis; if the weight still drifts after 20 minutes, prepare a new sample. Retest the sample if the carbon, hydrogen, and oxygen mass fractions do not add up to a total mass of 100 ±0.5%; if you do not measure oxygen, you may assume it has a zero concentration for this specification.

(ii) Determine oxygen mass fraction of gasoline (with or without blended ethanol) according to ASTM D5599 (incorporated by reference in §1065.1010). For all other liquid fuels, determine

the oxygen mass fraction using good engineering judgment.

(iii) Determine the nitrogen mass fraction according to ASTM D4629 or ASTM D5762 (incorporated by reference in § 1065.1010) for all liquid fuels. Select the correct method based on the expected nitrogen content.

(iv) Determine the sulfur mass fraction according to subpart H of this part.

(2) For gaseous fuels and diesel exhaust fluid, use the default values for α, β, γ, and δ in Table 1 of this section, or use good engineering judgment to determine those values based on measurement.

(3) For nonconstant fuel mixtures, you must account for the varying proportions of the different fuels. This generally applies for dual-fuel engines, but it also applies if diesel exhaust fluid is injected in a way that is not strictly proportional to fuel flow. Account for these varying concentrations either with a batch measurement that provides averaged values to represent the test interval, or by analyzing data from continuous mass rate measurements. Application of average values from a batch measurement generally applies to situations where one fluid is a minor component of the total fuel mixture, for example dual-fuel engines with diesel pilot injection, where the diesel pilot fuel mass is less than 5% of the total fuel mass and diesel exhaust fluid injection; consistent with good engineering judgment.

(4) Calculate α, β, γ, and δ using the following equations:

$$\alpha = \frac{M_{\mathrm{C}}}{M_{\mathrm{H}}} \cdot \frac{\sum_{\mathrm{j}=1}^{M} \dot{m}_{\mathrm{j}} \cdot w_{\mathrm{Hj}}}{\sum_{\mathrm{j}=1}^{M} \dot{m}_{\mathrm{j}} \cdot w_{\mathrm{Cj}}}$$

Eq. 1065.655-20

$$\beta = \frac{M_{\mathrm{C}}}{M_{\mathrm{O}}} \cdot \frac{\sum_{\mathrm{j}=1}^{M} \dot{m}_{\mathrm{j}} \cdot w_{\mathrm{Oj}}}{\sum_{\mathrm{j}=1}^{M} \dot{m}_{\mathrm{j}} \cdot w_{\mathrm{Cj}}}$$

Eq. 1065.655-21

$$\gamma = \frac{M_{\mathrm{C}}}{M_{\mathrm{S}}} \cdot \frac{\sum_{\mathrm{j}=1}^{M} \dot{m}_{\mathrm{j}} \cdot w_{\mathrm{Sj}}}{\sum_{\mathrm{j}=1}^{M} \dot{m}_{\mathrm{j}} \cdot w_{\mathrm{Cj}}}$$

Eq. 1065.655-22

$$\delta = \frac{M_C}{M_N} \cdot \frac{\sum_{j=1}^{M} \dot{m}_j \cdot w_{Nj}}{\sum_{j=1}^{M} \dot{m}_j \cdot w_{Cj}}$$

Eq. 1065.655-23

Where:

M = total number of fuels and injected fluids over the duty cycle.

j = an indexing variable that represents one fuel or injected fluid, starting with j = 1.

$\dot{m}_j$ = the mass flow rate of the fuel or any injected fluid j. For applications using a single fuel and no DEF fluid, set this value to 1. For batch measurements, divide the total mass of fuel over the test interval duration to determine a mass rate.

W_{Hj} = hydrogen mass fraction of fuel or any injected fluid j.

W_{Cj} = carbon mass fraction of fuel or any injected fluid j.

W_{Oj} = oxygen mass fraction of fuel or any injected fluid j.

W_{Sj} = sulfur mass fraction of fuel or any injected fluid j.

W_{Nj} = nitrogen mass fraction of fuel or any injected fluid j.

Example:

$N = 1$
$j = 1$
$\dot{m}_j = 1$
$W_{Hj} = 0.1239$
$W_{Cj} = 0.8206$
$W_{Oj} = 0.0547$
$W_{Sj} = 0.00066$
$W_{Nj} = 0.000095$
$M_C = 12.0107$
$M_H = 1.00794$
$M_O = 15.9994$
$M_S = 32.065$
$M_N = 14.0067$

$$\alpha = \frac{12.0107 \cdot 1 \cdot 0.1239}{1.00794 \cdot 1 \cdot 0.8206}$$

$$\beta = \frac{12.0107 \cdot 1 \cdot 0.0547}{15.9994 \cdot 1 \cdot 0.8206}$$

$$\gamma = \frac{12.0107 \cdot 1 \cdot 0.00066}{32.065 \cdot 1 \cdot 0.8206}$$

$$\delta = \frac{12.0107 \cdot 1 \cdot 0.000095}{14.0067 \cdot 1 \cdot 0.8206}$$

$\alpha = 1.799$
$\beta = 0.05004$
$\gamma = 0.0003012$
$\delta = 0.0001003$

TABLE 1 OF § 1065.655—DEFAULT VALUES OF α, β, γ, δ, AND W_C

Fuel or injected fluid	Atomic hydrogen, oxygen, sulfur, and nitrogen-to-carbon ratios $CH\alpha O\beta S\gamma N\delta$	Carbon mass fraction, W_C g/g
Gasoline	$CH_{1.85}O_0S_0N_0$	0.866

TABLE 1 OF § 1065.655—DEFAULT VALUES OF α, β, γ, δ, AND W_C—Continued

Fuel or injected fluid	Atomic hydrogen, oxygen, sulfur, and nitrogen-to-carbon ratios $CH\alpha O\beta S\gamma N\delta$	Carbon mass fraction, W_C g/g
E10 Gasoline	$CH_{1.92}O_{0.03}S_0N_0$	0.833
E15 Gasoline	$CH_{1.95}O_{0.05}S_0N_0$	0.817
E85 Gasoline	$CH_{2.73}O_{0.38}S_0N_0$	0.576
E100 Ethanol	$CH_3O_{0.5}S_0N_0$	0.521
M100 Methanol	$CH_4O_1S_0N_0$	0.375
#1 Diesel	$CH_{1.93}O_0S_0N_0$	0.861
#2 Diesel	$CH_{1.80}O_0S_0N_0$	0.869
Liquefied petroleum gas	$CH_{2.64}O_0S_0N_0$	0.819
Natural gas	$CH_{3.78}\ O_{0.016}S_0N_0$	0.747
Residual fuel blends	Must be determined by measured fuel properties as described in paragraph (d)(1) of this section.	
Diesel exhaust fluid	$CH_{17.85}O_{7.92}S_0N_2$	0.065

(f) *Calculated raw exhaust molar flow rate from measured intake air molar flow rate or fuel mass flow rate.* You may calculate the raw exhaust molar flow rate from which you sampled emissions, $\dot{n}_{exh}$, based on the measured intake air molar flow rate, $\dot{n}_{int}$, or the measured fuel mass flow rate, $\dot{m}_{fuel}$, and the values calculated using the chemical balance in paragraph (c) of this section. The chemical balance must be based on raw exhaust gas concentrations. Solve for the chemical balance in paragraph (c) of this section at the same frequency that you update and record or $\dot{n}_{int}$ or $\dot{m}_{fuel}$. For laboratory tests, calculating raw exhaust molar flow rate using measured fuel mass flow rate is valid only for steady-state testing. See § 1065.915(d)(5)(iv) for application to field testing.

(1) *Crankcase flow rate.* If engines are not subject to crankcase controls under the standard-setting part, you may calculate raw exhaust flow based on $\dot{n}_{int}$ or $\dot{m}_{fuel}$ using one of the following:

(i) You may measure flow rate through the crankcase vent and subtract it from the calculated exhaust flow.

(ii) You may estimate flow rate through the crankcase vent by engineering analysis as long as the uncertainty in your calculation does not adversely affect your ability to show that your engines comply with applicable emission standards.

(iii) You may assume your crankcase vent flow rate is zero.

(2) *Intake air molar flow rate calculation.* Calculate $\dot{n}_{exh}$ based on $\dot{n}_{int}$ using the following equation:

$$\dot{n}_{exh} = \frac{\dot{n}_{int}}{\left(1 + \frac{\left(x_{int/exhdry} - x_{raw/exhdry}\right)}{\left(1 + x_{H2Oexhdry}\right)}\right)}$$

Eq. 1065.655-24

Where:

$\dot{n}_{exh}$ = raw exhaust molar flow rate from which you measured emissions.

$\dot{n}_{int}$ = intake air molar flow rate including humidity in intake air.

Example:

$\dot{n}_{int}$ = 3.780 mol/s

$x_{int/exhdry}$ = 0.69021 mol/mol

$x_{raw/exhdry}$ = 1.10764 mol/mol

$x_{H20exhdry}$ = 107.64 mmol/mol = 0.10764 mol/mol

$$\dot{n}_{exh} = \frac{3.780}{\left(1 + \frac{(0.69021 - 1.10764)}{(1 + 0.10764)}\right)}$$

$$\dot{n}_{exh} = 6.066 \text{ mol/s}$$

(3) *Fluid mass flow rate calculation.* This calculation may be used only for steady-state laboratory testing. See §1065.915(d)(5)(iv) for application to field testing. Calculate $\dot{n}_{exh}$ based on using the following equation:

$$\dot{n}_{exh} = \sum_{j=1}^{N} \dot{m}_j \cdot \frac{w_C \cdot \left(1 + x_{H2Oexhdry}\right)}{M_C \cdot x_{Ccombdry}}$$

Eq. 1065.655-25

Where:

$\dot{n}_{exh}$ = raw exhaust molar flow rate from which you measured emissions.

N = total number of fuels and injected fluids over the duty cycle.

j = an indexing variable that represents one fuel or injected fluid, starting with j = 1.

$\dot{m}_j$ = the mass flow rate of the fuel or any injected fluid j.

Example:

$N = 1$

$j = 1$

$\dot{m}_j$ = 7.559 g/s

w_C = 0.869 g/g

M_C = 12.0107 g/mol

$\chi_{Ccombdry}$ = 99.87 mmol/mol = 0.09987 mol/mol

$\chi_{H20exhdry}$ = 107.64 mmol/mol = 0.10764 mol/mol

$$\dot{n}_{exh} = 7.559 \cdot \frac{0.869 \cdot (1 + 0.10764)}{12.0107 \cdot 0.09987}$$

$\dot{n}_{exh}$ = 6.066 mol/s

(g) *Calculated raw exhaust molar flow rate from measured intake air molar flow rate, dilute exhaust molar flow rate, and dilute chemical balance.* You may calculate the raw exhaust molar flow rate, $\dot{n}_{exh}$, based on the measured intake air molar flow rate, $\dot{n}_{int}$, the measured dilute exhaust molar flow rate, $\dot{n}_{dexh}$, and the values calculated using the chemical balance in paragraph (c) of this section. Note that the chemical balance must be based on dilute exhaust gas concentrations. For continuous-flow calculations, solve for the chemical balance in paragraph (c) of this section at the same frequency that you update and record $\dot{n}_{int}$ and $\dot{n}_{dexh}$. This calculated $\dot{n}_{exh}$ may be used for the PM dilution ratio verification in §1065.546; the calculation of dilution air molar flow rate in the background correction in §1065.667; and the calculation of mass of emissions in §1065.650(c) for species that are measured in the raw exhaust.

(1) *Crankcase flow rate.* If engines are not subject to crankcase controls under the standard-setting part, calculate raw exhaust flow as described in paragraph (e)(1) of this section.

(2) *Dilute exhaust and intake air molar flow rate calculation.* Calculate $\dot{n}_{exh}$ as follows:

$$\dot{n}_{\text{exh}} = \left(x_{\text{raw/exhdry}} - x_{\text{int/exhdry}}\right) \cdot \left(1 - x_{\text{H2Oexh}}\right) \cdot \dot{n}_{\text{dexh}} + \dot{n}_{\text{int}}$$

Eq. 1065.655-26

Example:
$\dot{n}_{\text{int}}$ = 7.930 mol/s
$x_{\text{raw/exhdry}}$ = 0.1544 mol/mol
$x_{\text{int/exhdry}}$ = 0.1451 mol/mol
$x_{\text{H20/exh}}$ = 32.46 mmol/mol = 0.03246 mol/mol
$\dot{n}_{\text{dexh}}$ = 49.02 mol/s
$\dot{n}_{\text{exh}}$ = (0.1544 − 0.1451) · (1 − 0.03246) · 49.02 + 7.930 = 0.4411 + 7.930 = 8.371 mol/s

[73 FR 37331, June 30, 2008, as amended at 73 FR 59334, Oct. 8, 2008; 75 FR 23051, Apr. 30, 2010; 76 FR 57458, Sept. 15, 2011; 79 FR 23799, Apr. 28, 2014; 81 FR 74182, Oct. 25, 2016]

EFFECTIVE DATE NOTE: At 86 FR 34563, June 29, 2021, § 1065.655 was amended, effective July 29, 2021.

§ 1065.659 Removed water correction.

(a) If you remove water upstream of a concentration measurement, x, correct for the removed water. Perform this correction based on the amount of water at the concentration measurement, $x_{\text{H2O[emission]meas}}$, and at the flow meter, x_{H2Oexh}, whose flow is used to determine the mass emission rate or total mass over a test interval. For continuous analyzers downstream of a sample dryer for transient and ramped-modal cycles, you must apply this correction on a continuous basis over the test interval, even if you use one of the options in § 1065.145(e)(2) that results in a constant value for $x_{\text{H2O[emission]meas}}$ because x_{H2Oexh} varies over the test interval. For batch analyzers, determine the flow-weighted average based on the continuous x_{H2Oexh} values determined as described in paragraph (c) of this section. For batch analyzers, you may determine the flow-weighted average x_{H2Oexh} based on a single value of x_{H2Oexh} determined as described in paragraphs (c)(2) and (3) of this section, using flow-weighted average or batch concentration inputs.

(b) Determine the amount of water remaining downstream of a sample dryer and at the concentration measurement using one of the methods described in § 1065.145(e)(2). If you use a sample dryer upstream of an analyzer and if the calculated amount of water remaining downstream of the sample dryer and at the concentration measurement, $x_{\text{H2O[emission]meas}}$, is higher than the amount of water at the flow meter, x_{H2Oexh}, set $x_{\text{H2O[emission]meas}}$ equal to x_{H2Oexh}. If you use a sample dryer upstream of storage media, you must be able to demonstrate that the sample dryer is removing water continuously (*i.e.*, x_{H2Oexh} is higher than $x_{\text{H2O[emission]meas}}$ throughout the test interval).

(c) For a concentration measurement where you did not remove water, you may set $x_{\text{H2O[emission]meas}}$ equal to x_{H2Oexh}. You may determine the amount of water at the flow meter, x_{H2Oexh}, using any of the following methods:

(1) Measure the dewpoint and absolute pressure and calculate the amount of water as described in § 1065.645.

(2) If the measurement comes from raw exhaust, you may determine the amount of water based on intake-air humidity, plus a chemical balance of fuel, intake air, and exhaust as described in § 1065.655.

(3) If the measurement comes from diluted exhaust, you may determine the amount of water based on intake-air humidity, dilution air humidity, and a chemical balance of fuel, intake air, and exhaust as described in § 1065.655.

(d) Perform a removed water correction to the concentration measurement using the following equation:

$$x = x_{[\text{emission}]\text{meas}} \cdot \left(\frac{1 - x_{\text{H2Oexh}}}{1 - x_{\text{H2O}[\text{emission}]\text{meas}}} \right)$$

Eq. 1065.659-1

Example:

x_{COmeas} = 29.0 μmol/mol

$x_{\text{H2OCOmeas}}$ = 8.601 mmol/mol = 0.008601 mol/mol

x_{H2Oexh} = 34.04 mmol/mol = 0.03404 mol/mol

$$x_{\text{CO}} = 29.0 \cdot \left(\frac{1 - 0.03404}{1 - 0.008601} \right)$$

x_{CO} = 28.3 μmol/mol

[73 FR 37335, June 30, 2008, as amended at 76 FR 57462, Sept. 15, 2011; 79 FR 23804, Apr. 28, 2014]

EFFECTIVE DATE NOTE: At 86 FR 34566, June 29, 2021, § 1065.659 was amended, effective July 29, 2021.

§ 1065.660 THC, NMHC, NMNEHC, CH_4, and C_2H_6 determination.

(a) *THC determination and initial THC/CH_4 contamination corrections.* (1) If we require you to determine THC emissions, calculate $x_{\text{THC[THC-FID]cor}}$ using the initial THC contamination concentration $x_{\text{THC[THC-FID]init}}$ from § 1065.520 as follows:

$$x_{\text{THC[THC-FID]cor}} = x_{\text{THC[THC-FID]uncor}} - x_{\text{THC[THC-FID]init}}$$

Eq. 1065.660-1

Example:
x_{THCuncor} = 150.3 μmol/mol
x_{THCinit} = 1.1 μmol/mol
x_{THCcor} = 150.3—1.1
x_{THCcor} = 149.2 μmol/mol

(2) For the NMHC determination described in paragraph (b) of this section, correct $x_{\text{THC[THC-FID]}}$ for initial THC contamination using Eq. 1065.660–1. You may correct $x_{\text{THC[NMC-FID]}}$ for initial contamination of the CH_4 sample train using Eq. 1065.660–1, substituting in CH_4 concentrations for THC.

(3) For the NMNEHC determination described in paragraph (c) of this section, correct $x_{\text{THC[THC-FID]}}$ for initial THC contamination using Eq. 1065.660–1. You may correct $x_{\text{THC[NMC-FID]}}$ for initial contamination of the CH_4 sample train

using Eq. 1065.660–1, substituting in CH_4 concentrations for THC.

(4) For the CH_4 determination described in paragraph (d) of this section, you may correct $x_{THC[NMC–FID]}$ for initial THC contamination of the CH_4 sample train using Eq. 1065.660–1, substituting in CH_4 concentrations for THC.

(b) *NMHC determination*. Use one of the following to determine NMHC concentration, x_{NMHC}:

(1) If you do not measure CH_4, you may omit the calculation of NMHC concentrations and calculate the mass of NMHC as described in § 1065.650(c)(5).

(2) For nonmethane cutters, calculate x_{NMHC} using the nonmethane cutter's penetration fraction (*PF*) of CH_4 and the response factor penetration fraction (*RFPF*) of C_2H_6 from § 1065.365, the response factor (*RF*) of the THC FID to CH_4 from § 1065.360, the initial THC contamination and dry-to-wet corrected THC concentration $x_{THC[THC-FID]cor}$ as determined in paragraph (a) of this section, and the dry-to-wet corrected CH_4 concentration $x_{THC[NMC-FID]cor}$ optionally corrected for initial THC contamination as determined in paragraph (a) of this section.

(i) Use the following equation for penetration fractions determined using an NMC configuration as outlined in § 1065.365(d):

$$x_{NMHC} = \frac{x_{THC[THC-FID]cor} - x_{THC[NMC-FID]cor} \cdot RF_{CH4[THC-FID]}}{1 - RFPF_{C2H6[NMC-FID]} \cdot RF_{CH4[THC-FID]}}$$

Eq. 1065.660-2

Where:

x_{NMHC} = concentration of NMHC.

$x_{THC[THC-FID]cor}$ = concentration of THC, initial THC contamination and dry-to-wet corrected, as measured by the THC FID during sampling while bypassing the NMC.

$x_{THC[NMC-FID]cor}$ = concentration of THC, initial THC contamination (optional) and dry-to-wet corrected, as measured by the NMC FID during sampling through the NMC.

$RF_{CH4[THC-FID]}$ = response factor of THC FID to CH_4, according to § 1065.360(d).

$RFPF_{C2H6[NMC-FID]}$ = nonmethane cutter combined ethane response factor and penetration fraction, according to § 1065.365(d).

Example:

$x_{THC[THC-FID]cor}$ = 150.3 μmol/mol

$x_{THC[NMC-FID]cor}$ = 20.5 μmol/mol

$RFPF_{C2H6[NMC-FID]}$ = 0.019

$RF_{CH4[THC-FID]}$ = 1.05

$$x_{NMHC} = \frac{150.3 - 20.5 \cdot 1.05}{1 - 0.019 \cdot 1.05}$$

x_{NMHC} = 131.4 μmol/mol

(ii) For penetration fractions determined using an NMC configuration as outlined in section § 1065.365(e), use the following equation:

$$x_{NMHC} = \frac{x_{THC[THC-FID]cor} \cdot PF_{CH4[NMC-FID]} - x_{THC[NMC-FID]cor}}{PF_{CH4[NMC-FID]} - PF_{C2H6[NMC-FID]}}$$

Eq. 1065.660-3

Where:

x_{NMHC} = concentration of NMHC.

$x_{THC[THC-FID]cor}$ = concentration of THC, initial THC contamination and dry-to-wet corrected, as measured by the THC FID during sampling while bypassing the NMC.

$PF_{CH4[NMC-FID]}$ = nonmethane cutter CH_4 penetration fraction, according to §1065.365(e).

$x_{THC[NMC-FID]cor}$ = concentration of THC, initial THC contamination (optional) and dry-to-wet corrected, as measured by the THC FID during sampling through the NMC.

$PF_{C2H6[NMC-FID]}$ = nonmethane cutter ethane penetration fraction, according to §1065.365(e).

Example:

$x_{THC[THC-FID]cor}$ = 150.3 μmol/mol

$PF_{CH4[NMC-FID]}$ = 0.990

$x_{THC[NMC-FID]cor}$ = 20.5 μmol/mol

$PF_{C2H6[NMC-FID]}$ = 0.020

$$x_{NMHC} = \frac{150.3 \cdot 0.990 - 20.5}{0.990 - 0.020}$$

x_{NMHC} = 132.3 μmol/mol

(iii) For penetration fractions determined using an NMC configuration as outlined in section §1065.365(f), use the following equation:

$$x_{NMHC} = \frac{x_{THC[THC-FID]cor} \cdot PF_{CH4[NMC-FID]} - x_{THC[NMC-FID]cor} \cdot RF_{CH4[THC-FID]}}{PF_{CH4[NMC-FID]} - RFPF_{C2H6[NMC-FID]} \cdot RF_{CH4[THC-FID]}}$$

Eq. 1065.660-4

Where:

x_{NMHC} = concentration of NMHC.

$x_{THC[THC-FID]cor}$ = concentration of THC, initial THC contamination and dry-to-wet corrected, as measured by the THC FID during sampling while bypassing the NMC.

$PF_{CH4[NMC-FID]}$ = nonmethane cutter CH_4 penetration fraction, according to §1065.365(f).

$x_{THC[NMC-FID]cor}$ = concentration of THC, initial THC contamination (optional) and dry-to-wet corrected, as measured by the THC FID during sampling through the NMC.

$RFPF_{C2H6[NMC-FID]}$ = nonmethane cutter CH_4 combined ethane response factor and penetration fraction, according to §1065.365(f).

$RF_{CH4[THC-FID]}$ = response factor of THC FID to CH_4, according to §1065.360(d).

Example:

$x_{THC[THC-FID]cor}$ = 150.3 μmol/mol

$PF_{CH4[NMC-FID]}$ = 0.990

$x_{THC[NMC-FID]cor}$ = 20.5 μmol/mol

$RFPF_{C2H6[NMC-FID]}$ = 0.019

$RF_{CH4[THC-FID]}$ = 0.980

$$x_{NMHC} = \frac{150.3 \cdot 0.990 - 20.5 \cdot 0.980}{0.990 - 0.019 \cdot 0.980}$$

x_{NMHC} = 132.5 μmol/mol

(3) For a GC–FID or FTIR, calculate x_{NMHC} using the THC analyzer's response factor (RF) for CH_4, from §1065.360, and the initial THC contamination and dry-to-wet corrected THC concentration $x_{THC[THC-FID]cor}$ as determined in paragraph (a) of this section as follows:

$$x_{\mathrm{NMHC}} = x_{\mathrm{THC[THC\text{-}FID]cor}} - RF_{\mathrm{CH4[THC\text{-}FID]}} \cdot x_{\mathrm{CH4}}$$

Eq. 1065.660-5

Where:

x_{NMHC} = concentration of NMHC.

$x_{\mathrm{THC[THC\text{–}FID]cor}}$ = concentration of THC, initial THC contamination and dry-to-wet corrected, as measured by the THC FID.

$RF_{\mathrm{CH4[THC\text{–}FID]}}$ = response factor of THC–FID to CH_4.

x_{CH4} = concentration of CH_4, dry-to-wet corrected, as measured by the GC–FID or FTIR.

Example:

$x_{\mathrm{THC[THC\text{–}FID]cor}}$ = 145.6 μmol/mol

$RF_{\mathrm{CH4[THC\text{–}FID]}}$ = 0.970

x_{CH4} = 18.9 μmol/mol

$x_{\mathrm{NMHC}} = 145.6 - 0.970 \cdot 18.9$

x_{NMHC} = 127.3 μmol/mol

(4) For an FTIR, calculate x_{NMHC} by summing the hydrocarbon species listed in § 1065.266(c) as follows:

$$x_{\mathrm{NMHC}} = \sum_{i=1}^{N} \left(x_{\mathrm{HCi}} - x_{\mathrm{HCi\text{-}init}} \right)$$

Eq. 1065.660-6

Where:

x_{NMHC} = concentration of NMHC.

x_{HCi} = the C_1-equivalent concentration of hydrocarbon species *i* as measured by the FTIR, not corrected for initial contamination.

$x_{\mathrm{HCi\text{-}init}}$ = the C_1-equivalent concentration of the initial system contamination (optional) of hydrocarbon species *i*, dry-to-wet corrected, as measured by the FTIR.

Example:

x_{C2H6} = 4.9 μmol/mol

x_{C2H4} = 0.9 μmol/mol

x_{C2H2} = 0.8 μmol/mol

x_{C3H8} = 0.4 μmol/mol

x_{C3H6} = 0.5 μmol/mol

x_{C4H10} = 0.3 μmol/mol

x_{CH2O} = 0.8 μmol/mol

x_{C2H4O} = 0.3 μmol/mol

x_{C2H2O2} = 0.1 μmol/mol

x_{CH4O} = 0.1 μmol/mol

x_{NMHC} = 4.9 + 0.9 + 0.8 + 0.4 + 0.5 + 0.3 + 0.8 + 0.3 + 0.1 + 0.1

x_{NMHC} = 9.1 μmol/mol

(c) *NMNEHC determination*. Use one of the following methods to determine NMNEHC concentration, x_{NMNEHC}:

(1) If the content of your test fuel contains less than 0.010 mol/mol of ethane, you may omit the calculation of NMNEHC concentrations and calculate the mass of NMNEHC as described in § 1065.650(c)(6).

(2) For a GC–FID or FTIR, calculate x_{NMNEHC} using the THC analyzer's response factors (*RF*) for CH_4 and C_2H_6, from § 1065.360, and the initial contamination and dry-to-wet corrected THC concentration $x_{\mathrm{THC[THC\text{–}FID]cor}}$ as determined in paragraph (a) of this section as follows:

$$x_{\mathrm{NMNEHC}} = x_{\mathrm{THC[THC\text{-}FID]cor}} - RF_{\mathrm{CH4[THC\text{-}FID]}} \cdot x_{\mathrm{CH4}} - RF_{\mathrm{C2H6[THC\text{-}FID]}} \cdot x_{\mathrm{C2H6}}$$

Eq. 1065.660-7

Where:

x_{NMNEHC} = concentration of NMNEHC.

$x_{THC[THC-FID]cor}$ = concentration of THC, initial THC contamination and dry-to-wet corrected, as measured by the THC FID.

$RF_{CH4[THC-FID]}$ = response factor of THC–FID to CH_4.

x_{CH4} = concentration of CH_4, dry-to-wet corrected, as measured by the GC–FID or FTIR.

$RF_{C2H6[THC-FID]}$ = response factor of THC–FID to C_2H_6.

x_{C2H6} = the C_1-equivalent concentration of C_2H_6, dry-to-wet corrected, as measured by the GC–FID or FTIR.

Example:

$x_{THC[THC-FID]cor}$ = 145.6 μmol/mol
$RF_{CH4[THC-FID]}$ = 0.970
x_{CH4} = 18.9 μmol/mol
$RF_{C2H6[THC-FID]}$ = 1.02
x_{C2H6} = 10.6 μmol/mol
x_{NMHC} = 145.6—0.970 · 18.9—1.02 · 10.6
x_{NMHC} = 116.5 μmol/mol

(3) For an FTIR, calculate x_{NMNEHC} by summing the hydrocarbon species listed in §1065.266(c) as follows:

$$x_{NMNEHC} = \sum_{i=1}^{N} \left(x_{HCi} - x_{HCi\text{-}init} \right)$$

Eq. 1065.660-8

Where:

x_{NMNEHC} = concentration of NMNEHC.

x_{HCi} = the C_1-equivalent concentration of hydrocarbon species *i* as measured by the FTIR, not corrected for initial contamination.

$x_{HCi\text{-}init}$ = the C_1-equivalent concentration of the initial system contamination (optional) of hydrocarbon species *i*, dry-to-wet corrected, as measured by the FTIR.

Example:

x_{C2H4} = 0.9 μmol/mol
x_{C2H2} = 0.8 μmol/mol
x_{C3H8} = 0.4 μmol/mol
x_{C3H6} = 0.5 μmol/mol
x_{C4H10} = 0.3 μmol/mol
x_{CH2O} = 0.8 μmol/mol
x_{C2H4O} = 0.3 μmol/mol
x_{C2H2O2} = 0.1 μmol/mol
x_{CH4O} = 0.1 μmol/mol
x_{NMNEHC} = 0.9 + 0.8 + 0.4 + 0.5 + 0.3 + 0.8 + 0.3 + 0.1 + 0.1
x_{NMNEHC} = 4.2 μmol/mol

(d) *CH_4 determination*. Use one of the following methods to determine CH_4 concentration, χ_{CH4}:

(1) For nonmethane cutters, calculate xCH_4 using the nonmethane cutter's penetration fraction (*PF*) of CH_4 and the response factor penetration fraction (*RFPF*) of C_2H_6 from §1065.365, the response factor (*RF*) of the THC FID to CH_4 from §1065.360, the initial THC contamination and dry-to-wet corrected THC concentration $x_{THC[THC-FID]cor}$ as determined in paragraph (a) of this section, and the dry-to-wet corrected CH_4 concentration $x_{THC[NMC-FID]cor}$ optionally corrected for initial THC contamination as determined in paragraph (a) of this section.

(i) Use the following equation for penetration fractions determined using an NMC configuration as outlined in §1065.365(d):

$$x_{CH4} = \frac{x_{THC[NMC\text{-}FID]cor} - x_{THC[THC\text{-}FID]cor} \cdot RFPF_{C2H6[NMC\text{-}FID]}}{1 - RFPF_{C2H6[NMC\text{-}FID]} \cdot RF_{CH4[THC\text{-}FID]}}$$

Eq. 1065.660-9

Where:

x_{CH4} = concentration of CH_4.

$x_{THC[NMC\text{-}FID]cor}$ = concentration of THC, initial THC contamination (optional) and dry-to-wet corrected, as measured by the NMC FID during sampling through the NMC.

$x_{THC[THC\text{-}FID]cor}$ = concentration of THC, initial THC contamination and dry-to-wet corrected, as measured by the THC FID during sampling while bypassing the NMC.

$RFPF_{C2H6[NMC\text{-}FID]}$ = the combined ethane response factor and penetration fraction of the nonmethane cutter, according to §1065.365(d).

$RF_{CH4[THC\text{–}FID]}$ = response factor of THC FID to CH_4, according to §1065.360(d).

Example:

$x_{THC[NMC\text{-}FID]cor}$ = 10.4 μmol/mol

$x_{THC[THC\text{-}FID]cor}$ = 150.3 μmol/mol

$RFPF_{C2H6[NMC\text{-}FID]}$ = 0.019

$RF_{CH4[THC\text{-}FID]}$ = 1.05

$$x_{CH4} = \frac{10.4 - 150.3 \cdot 0.019}{1 - 0.019 \cdot 1.05}$$

x_{CH4} = 7.69 μmol/mol

(ii) For penetration fractions determined using an NMC configuration as outlined in §1065.365(e), use the following equation:

$$x_{CH4} = \frac{x_{THC[NMC\text{-}FID]cor} - x_{THC[THC\text{-}FID]cor} \cdot PF_{C2H6[NMC\text{-}FID]}}{RF_{CH4[THC\text{-}FID]} \cdot \left(PF_{CH4[NMC\text{-}FID]} - PF_{C2H6[NMC\text{-}FID]}\right)}$$

Eq. 1065.660-10

Where:

x_{CH4} = concentration of CH_4.

$x_{THC[NMC\text{-}FID]cor}$ = concentration of THC, initial THC contamination (optional) and dry-to-wet corrected, as measured by the NMC FID during sampling through the NMC.

$x_{THC[THC\text{-}FID]cor}$ = concentration of THC, initial THC contamination and dry-to-wet corrected, as measured by the THC FID during sampling while bypassing the NMC.

$PF_{C2H6[NMC\text{–}FID]}$ = nonmethane cutter ethane penetration fraction, according to §1065.365(e).

$RF_{CH4[THC\text{–}FID]}$ = response factor of THC FID to CH_4, according to §1065.360(d).

$PF_{CH4[NMC\text{–}FID]}$ = nonmethane cutter CH_4 penetration fraction, according to §1065.365(e).

Example:

$x_{THC[NMC\text{–}FID]cor}$ = 10.4 μmol/mol

$x_{THC[THC\text{–}FID]cor}$ = 150.3 μmol/mol

$PF_{C2H6[NMC\text{–}FID]}$ = 0.020

$RF_{CH4[THC\text{–}FID]}$ = 1.05

$PF_{CH4[NMC\text{–}FID]}$ = 0.990

$$x_{CH4} = \frac{10.4 - 150.3 \cdot 0.020}{1.05 \cdot \left(0.990 - 0.020\right)}$$

x_{CH4} = 7.25 μmol/mol

(iii) For penetration fractions determined using an NMC configuration as outlined in §1065.365(f), use the following equation:

$$x_{CH4} = \frac{x_{THC[NMC\text{-}FID]cor} - x_{THC[THC\text{-}FID]cor} \cdot RFPF_{C2H6[NMC\text{-}FID]}}{PF_{CH4[NMC\text{-}FID]} - RFPF_{C2H6[NMC\text{-}FID]} \cdot RF_{CH4[THC\text{-}FID]}}$$

Eq. 1065.660-11

Where:

x_{CH4} = concentration of CH_4.

$x_{THC[NMC–FID]cor}$ = concentration of THC, initial THC contamination (optional) and dry-to-wet corrected, as measured by the NMC FID during sampling through the NMC.

$x_{THC[THC–FID]cor}$ = concentration of THC, initial THC contamination and dry-to-wet corrected, as measured by the THC FID during sampling while bypassing the NMC.

$RFPF_{C2H6[NMC–FID]}$ = the combined ethane response factor and penetration fraction of the nonmethane cutter, according to §1065.365(f).

$PF_{CH4[NMC–FID]}$ = nonmethane cutter CH_4 penetration fraction, according to §1065.365(f).

$RF_{CH4[THC–FID]}$ = response factor of THC FID to CH_4, according to §1065.360(d).

Example:

$x_{THC[NMC–FID]cor}$ = 10.4 μmol/mol

$x_{THC[THC–FID]cor}$ = 150.3 μmol/mol

$RFPF_{C2H6[NMC–FID]}$ = 0.019

$PF_{CH4[NMC–FID]}$ = 0.990

$RF_{CH4[THC–FID]}$ = 1.05

$$x_{CH4} = \frac{10.4 - 150.3 \cdot 0.019}{0.990 - 0.019 \cdot 1.05}$$

x_{CH4} = 7.78 μmol/mol

(2) For a GC–FID or FTIR, x_{CH4} is the actual dry-to-wet corrected CH_4 concentration as measured by the analyzer.

(e) *C_2H_6 determination*. For a GC–FID or FTIR, x_{C2H6} is the C_1-equivalent, dry-to-wet corrected C_2H_6 concentration as measured by the analyzer.

[76 FR 57462, Sept. 15, 2011, as amended at 81 FR 74184, Oct. 25, 2016]

EFFECTIVE DATE NOTE: At 86 FR 34566, June 29, 2021, §1065.660 was amended, effective July 29, 2021.

§1065.665 THCE and NMHCE determination.

(a) If you measured an oxygenated hydrocarbon's mass concentration, first calculate its molar concentration in the exhaust sample stream from which the sample was taken (raw or diluted exhaust), and convert this into a C_1-equivalent molar concentration. Add these C_1-equivalent molar concentrations to the molar concentration of non-oxygenated total hydrocarbon (NOTHC). The result is the molar concentration of total hydrocarbon equivalent (THCE). Calculate THCE concentration using the following equations, noting that Eq. 1065.665–3 is required only if you need to convert your oxygenated hydrocarbon (OHC) concentration from mass to moles:

$$x_{THCE} = x_{NOTHC} + \sum_{i=1}^{N} \left(x_{OHCi} - x_{OHCi\text{-}init} \right)$$

Eq. 1065.665-1

$$x_{\mathrm{NOTHC}} = x_{\mathrm{THC[THC\text{-}FID]cor}} - \sum_{i=1}^{N}\left(\left(x_{\mathrm{OHCi}} - x_{\mathrm{OHCi\text{-}init}}\right)\cdot RF_{\mathrm{OHCi[THC\text{-}FID]}}\right)$$

Eq. 1065.665-2

$$x_{\mathrm{OHCi}} = \frac{\dfrac{m_{\mathrm{dexhOHCi}}}{M_{\mathrm{OHCi}}}}{\dfrac{m_{\mathrm{dexh}}}{M_{\mathrm{dexh}}}} = \frac{n_{\mathrm{dexhOHCi}}}{n_{\mathrm{dexh}}}$$

Eq. 1065.665-3

Where:

x_{THCE} = the sum of the C_1-equivalent concentrations of non-oxygenated hydrocarbon, alcohols, and aldehydes.

x_{NOTHC} = the sum of the C_1-equivalent concentrations of NOTHC.

x_{OHCi} = the C_1-equivalent concentration of oxygenated species i in diluted exhaust, not corrected for initial contamination.

$x_{\mathrm{OHCi\text{-}init}}$ = the C_1-equivalent concentration of the initial system contamination (optional) of oxygenated species i, dry-to-wet corrected.

$x_{\mathrm{THC[THC\text{–}FID]cor}}$ = the C_1-equivalent response to NOTHC and all OHC in diluted exhaust, HC contamination and dry-to-wet corrected, as measured by the THC–FID.

$RF_{\mathrm{OHCi[THC\text{–}FID]}}$ = the response factor of the FID to species i relative to propane on a C_1-equivalent basis.

$C^{\#}$ = the mean number of carbon atoms in the particular compound.

M_{dexh} = the molar mass of diluted exhaust as determine in §1065.340.

m_{dexhOHCi} = the mass of oxygenated species i in dilute exhaust.

M_{OHCi} = the C_1-equivalent molecular weight of oxygenated species i.

m_{dexh} = the mass of diluted exhaust

n_{dexhOHCi} = the number of moles of oxygenated species i in total diluted exhaust flow.

n_{dexh} = the total diluted exhaust flow.

(b) If we require you to determine nonmethane hydrocarbon equivalent (NMHCE), use the following equation:

$$x_{\mathrm{NMHCE}} = x_{\mathrm{THCE}} - RF_{\mathrm{CH4[THC\text{-}FID]}}\cdot x_{\mathrm{CH4}}$$

Eq. 1065.665-4

Where:

x_{NMHCE} = the sum of the C_1-equivalent concentrations of nonoxygenated nonmethane hydrocarbon (NONMHC), alcohols, and aldehydes.

$RF_{\mathrm{CH4[THC\text{–}FID]}}$ = the response factor of THC–FID to CH_4.

x_{CH4} = concentration of CH_4, HC contamination (optional) and dry-to-wet corrected, as measured by the gas chromatograph FID.

(c) The following example shows how to determine NMHCE emissions based on ethanol (C_2H_5OH), methanol (CH_3OH), acetaldehyde (C_2H_4O), and formaldehyde (CH_2O) as C_1-equivalent molar concentrations:

$x_{\mathrm{THC[THC\text{-}FID]cor}}$ = 145.6 μmol/mol
x_{CH4} = 18.9 μmol/mol
x_{C2H5OH} = 100.8 μmol/mol
x_{CH3OH} = 1.1 μmol/mol
x_{C2H4O} = 19.1 μmol/mol
x_{CH2O} = 1.3 μmol/mol
$RF_{\mathrm{CH4[THC\text{-}FID]}}$ = 1.07
$RF_{\mathrm{C2H5OH[THC\text{-}FID]}}$ = 0.76
$RF_{\mathrm{CH3OH[THC\text{-}FID]}}$ = 0.74
$RF_{\mathrm{H2H4O[THC\text{-}FID]}}$ = 0.50
$RF_{\mathrm{CH2O[THC\text{-}FID]}}$ = 0.0

$x_{NMHCE} = x_{THC[THC\text{-}FID]cor} - (x_{C2H5OH} \cdot RF_{C2H5OH[THC\text{-}FID]} + x_{CH3OH} \cdot RF_{CH3OH[THC\text{-}FID]} + x_{C2H4O} \cdot RF_{C2H4O[THC\text{-}FID]} + x_{CH2O} \cdot RF_{CH2O[THC\text{-}FID]}) + x_{C2H5OH} + x_{CH3OH} + x_{C2H4O} + x_{CH2O} - (RF_{CH4[THC\text{-}FID]} \cdot x_{CH4})$

$x_{NMHCE} = 145.6 - (100.8 \cdot 0.76 + 1.1 \cdot 0.74 + 19.1 \cdot 0.50 + 1.3 \cdot 0) + 100.8 + 1.1 + 19.1 + 1.3 - (1.07 \cdot 18.9)$

$x_{NMHCE} = 160.71$ μmol/mol

[79 FR 23805, Apr. 28, 2014, as amended at 81 FR 74187, Oct. 25, 2016]

EFFECTIVE DATE NOTE: At 86 FR 34567, June 29, 2021, § 1065.665 was amended, effective July 29, 2021.

§ 1065.667 Dilution air background emission correction.

(a) To determine the mass of background emissions to subtract from a diluted exhaust sample, first determine the total flow of dilution air, n_{dil}, over the test interval. This may be a measured quantity or a calculated quantity. Multiply the total flow of dilution air by the mean mole fraction (*i.e.*, concentration) of a background emission. This may be a time-weighted mean or a flow-weighted mean (*e.g.*, a proportionally sampled background). Finally, multiply by the molar mass, M, of the associated gaseous emission constituent. The product of n_{dil} and the mean molar concentration of a background emission and its molar mass, M, is the total background emission mass, m. In the case of PM, where the mean PM concentration is already in units of mass per mole of sample, $\bar{M}_{PM}$, multiply it by the total amount of dilution air flow, and the result is the total background mass of PM, m_{PM}. Subtract total background mass from total mass to correct for background emissions.

(b) You may determine the total flow of dilution air by a direct flow measurement.

(c) You may determine the total flow of dilution air by subtracting the calculated raw exhaust molar flow as described in § 1065.655(g) from the measured dilute exhaust flow. This may be done by totaling continuous calculations or by using batch results.

(d) You may determine the total flow of dilution air from the measured dilute exhaust flow and a chemical balance of the fuel, intake air, and dilute exhaust as described in § 1065.655. For this option, the molar flow of dilution air is calculated by multiplying the dilute exhaust flow by the mole fraction of dilution gas to dilute exhaust, $x_{dil/exh}$, from the dilute chemical balance. This may be done by totaling continuous calculations or by using batch results. For example, to use batch results, the total flow of dilution air is calculated by multiplying the total flow of diluted exhaust, n_{dexh}, by the flow-weighted mean mole fraction of dilution air in diluted exhaust, $\bar{x}_{dil/exh}$. Calculate $\bar{x}_{dil/exh}$ using flow-weighted mean concentrations of emissions in the chemical balance, as described in § 1065.655. The chemical balance in § 1065.655 assumes that your engine operates stoichiometrically, even if it is a lean-burn engine, such as a compression-ignition engine. Note that for lean-burn engines this assumption could result in an error in emission calculations. This error could occur because the chemical balance in § 1065.655 treats excess air passing through a lean-burn engine as if it was dilution air. If an emission concentration expected at the standard is about 100 times its dilution air background concentration, this error is negligible. However, if an emission concentration expected at the standard is similar to its background concentration, this error could be significant. If this error might affect your ability to show that your engines comply with applicable standards, we recommend that you either determine the total flow of dilution air using one of the more accurate methods in paragraph (b) or (c) of this section, or remove background emissions from dilution air by HEPA filtration, chemical adsorption, or catalytic scrubbing. You might also consider using a partial-flow dilution technique such as a bag mini-diluter, which uses purified air as the dilution air.

(e) The following is an example of using the flow-weighted mean fraction of dilution air in diluted exhaust, $\bar{x}_{dil/exh}$, and the total mass of background emissions calculated using the total flow of diluted exhaust, n_{dexh}, as described in § 1065.650(c):

$$m_{\text{bkgnd}} = \overline{x}_{\text{dil/exh}} \cdot m_{\text{bkgnddexh}}$$

Eq. 1065.667-1

$$m_{\text{bkgnddexh}} = M \cdot \overline{x}_{\text{bkgnd}} \cdot n_{\text{dexh}}$$

Eq. 1065.667-2

Example:
M_{NOx} = 46.0055 g/mol
$\bar{x}_{\text{bkgnd}}$ = 0.05 µmol/mol = $0.05 \cdot 10^{-6}$ mol/mol
n_{dexh} = 23280.5 mol
$\bar{x}_{\text{dil/exh}}$ = 0.843 mol/mol
$\text{m}_{\text{bkgndNOxdexh}} = 46.0055 \cdot 0.05 \cdot 10^{-6} \cdot 23280.5$
$m_{\text{bkgndNOxdexh}}$ = 0.0536 g
$m_{\text{bkgndNOx}} = 0.843 \cdot 0.0536$
m_{bkgndNOx} = 0.0452 g

(f) The following is an example of using the fraction of dilution air in diluted exhaust, $x_{\text{dil/exh}}$, and the mass rate of background emissions calculated using the flow rate of diluted exhaust, $\dot{n}_{\text{dexh}}$, as described in § 1065.650(c):

$$\dot{m}_{\text{bkgnd}} = x_{\text{dil/exh}} \cdot \dot{m}_{\text{bkgnddexh}}$$

Eq. 1065.667-3

$$\dot{m}_{\text{bkgnddexh}} = M \cdot x_{\text{bkgnd}} \cdot \dot{n}_{\text{dexh}}$$

Eq. 1065.667-4

Example:
M_{NOx} = 46.0055 g/mol
x_{bkgnd} = 0.05 µmol/mol = $0.05 \cdot 10^{-6}$ mol/mol
$\dot{n}_{\text{dexh}}$ = 23280.5 mol/s
$x_{\text{dil/exh}}$ = 0.843 mol/mol
$\dot{m}_{\text{bkgndNOxdexh}} = 46.0055 \cdot 0.05 \cdot 10^{-6} \cdot 23280.5$
$\dot{m}_{\text{bkgndNOxdexh}}$ = 0.0536 g/hr
$\dot{m}_{\text{bkgndNOx}} = 0.843 \cdot 0.0536$
$\dot{m}_{\text{bkgndNOx}}$ = 0.0452 g/hr

[76 FR 57465, Sept. 15, 2011, as amended at 81 FR 74188, Oct. 25, 2016]

EFFECTIVE DATE NOTE: At 86 FR 34567, June 29, 2021, § 1065.667 was amended, effective July 29, 2021.

§ 1065.670 NO_X intake-air humidity and temperature corrections.

See the standard-setting part to determine if you may correct NO_X emissions for the effects of intake-air humidity or temperature. Use the NO_X intake-air humidity and temperature corrections specified in the standard-setting part instead of the NO_X intake-air humidity correction specified in this part 1065. If the standard-setting part does not prohibit correcting NO_X emissions for intake-air humidity according to this part 1065, correct NO_X concentrations for intake-air humidity as described in this section. See § 1065.650(c)(1) for the proper sequence for applying the NO_X intake-air humidity and temperature corrections. You may use a time-weighted mean combustion air humidity to calculate this correction if your combustion air humidity remains within a tolerance of ±0.0025 mol/mol of the mean value over

the test interval. For intake-air humidity correction, use one of the following approaches:

(a) For compression-ignition engines, correct for intake-air humidity using the following equation:

$$x_{\mathrm{NOxcor}} = x_{\mathrm{NOxuncor}} \cdot \left(9.953 \cdot x_{\mathrm{H20}} + 0.832\right) \qquad \text{Eq. 1065.670-1}$$

Example:
x_{NOxuncor} = 700.5 μmol/mol
x_{H2O} = 0.022 mol/mol
x_{NOxcor} = 700.5 · (9.953 · 0.022 + 0.832)
x_{NOxcor} = 736.2 μmol/mol

(b) For spark-ignition engines, correct for intake-air humidity using the following equation:

$$x_{\mathrm{NOxcor}} = x_{\mathrm{NOxuncor}} \cdot \left(18.840 \cdot x_{\mathrm{H20}} + 0.68094\right) \qquad \text{Eq. 1065.670-2}$$

Example:
x_{NOxuncor} = 154.7 μmol/mol
x_{H2O} = 0.022 mol/mol
x_{NOxcor} = 154.7 · (18.840 · 0.022 + 0.68094)
x_{NOxcor} = 169.5 μmol/mol

(c) Develop your own correction, based on good engineering judgment.

[75 FR 23056, Apr. 30, 2010, as amended at 76 FR 57466, Sept. 15, 2011]

§ 1065.672 Drift correction.

(a) *Scope and frequency*. Perform the calculations in this section to determine if gas analyzer drift invalidates the results of a test interval. If drift does not invalidate the results of a test interval, correct that test interval's gas analyzer responses for drift according to this section. Use the drift-corrected gas analyzer responses in all subsequent emission calculations. Note that the acceptable threshold for gas analyzer drift over a test interval is specified in § 1065.550 for both laboratory testing and field testing.

(b) *Correction principles*. The calculations in this section utilize a gas analyzer's responses to reference zero and span concentrations of analytical gases, as determined sometime before and after a test interval. The calculations correct the gas analyzer's responses that were recorded during a test interval. The correction is based on an analyzer's mean responses to reference zero and span gases, and it is based on the reference concentrations of the zero and span gases themselves. Validate and correct for drift as follows:

(c) *Drift validation*. After applying all the other corrections—except drift correction—to all the gas analyzer signals, calculate brake-specific emissions according to § 1065.650. Then correct all gas analyzer signals for drift according to this section. Recalculate brake-specific emissions using all of the drift-corrected gas analyzer signals. Validate and report the brake-specific emission results before and after drift correction according to § 1065.550.

(d) *Drift correction*. Correct all gas analyzer signals as follows:

(1) Correct each recorded concentration, x_i, for continuous sampling or for batch sampling, $\bar{x}$.

(2) Correct for drift using the following equation:

$$x_{\mathrm{idriftcorrected}} = x_{\mathrm{refzero}} + \left(x_{\mathrm{refspan}} - x_{\mathrm{refzero}}\right) \cdot \frac{2x_{\mathrm{i}} - \left(x_{\mathrm{prezero}} + x_{\mathrm{postzero}}\right)}{\left(x_{\mathrm{prespan}} + x_{\mathrm{postspan}}\right) - \left(x_{\mathrm{prezero}} + x_{\mathrm{postzero}}\right)}$$

Eq. 1065.672-1

Where:

$x_{idriftcorrected}$ = concentration corrected for drift.

$x_{refzero}$ = reference concentration of the zero gas, which is usually zero unless known to be otherwise.

$x_{refspan}$ = reference concentration of the span gas.

$x_{prespan}$ = pre-test interval gas analyzer response to the span gas concentration.

$x_{postspan}$ = post-test interval gas analyzer response to the span gas concentration.

x_i or $\bar{x}$ = concentration recorded during test, before drift correction.

$x_{prezero}$ = pre-test interval gas analyzer response to the zero gas concentration.

$x_{postzero}$ = post-test interval gas analyzer response to the zero gas concentration.

Example:

$x_{refzero}$ = 0 μmol/mol

$x_{refspan}$ = 1800.0 μmol/mol

$x_{prespan}$ = 1800.5 μmol/mol

$x_{postspan}$ = 1695.8 μmol/mol

x_i or $\bar{x}$ = 435.5 μmol/mol

$x_{prezero}$ = 0.6 μmol/mol

$x_{postzero}$ = −5.2 μmol/mol

$$x_{idriftcorrected} = 0 + (1800.0 - 0) \cdot \frac{2 \cdot 435.5 - (0.6 + (-5.2))}{(1800.5 + 1695.8) - (0.6 + (-5.2))}$$

$x_{idriftcorrected}$ = 450.2 μmol/mol

(3) For any pre-test interval concentrations, use concentrations determined most recently before the test interval. For some test intervals, the most recent pre-zero or pre-span might have occurred before one or more previous test intervals.

(4) For any post-test interval concentrations, use concentrations determined most recently after the test interval. For some test intervals, the most recent post-zero or post-span might have occurred after one or more subsequent test intervals.

(5) If you do not record any pre-test interval analyzer response to the span gas concentration, $x_{prespan}$, set $x_{prespan}$ equal to the reference concentration of the span gas:

$x_{prespan} = x_{refspan}$.

(6) If you do not record any pre-test interval analyzer response to the zero gas concentration, $x_{prezero}$, set $x_{prezero}$ equal to the reference concentration of the zero gas:

$x_{prezero} = x_{refzero}$.

(7) Usually the reference concentration of the zero gas, $x_{refzero}$, is zero: $x_{refzero}$ = 0 μmol/mol. However, in some cases you might know that $x_{refzero}$ has a non-zero concentration. For example, if you zero a CO_2 analyzer using ambient air, you may use the default ambient air concentration of CO_2, which is 375 μmol/mol. In this case, $x_{refzero}$ = 375 μmol/mol. Note that when you zero an analyzer using a non-zero $x_{refzero}$, you must set the analyzer to output the actual $x_{refzero}$ concentration. For example, if $x_{refzero}$ = 375 μmol/mol, set the analyzer to output a value of 375 μmol/mol when the zero gas is flowing to the analyzer.

[70 FR 40516, July 13, 2005, as amended at 74 FR 8427, Feb. 24, 2009; 75 FR 23056, Apr. 30, 2010]

§ 1065.675 CLD quench verification calculations.

Perform CLD quench-check calculations as follows:

(a) Perform a CLD analyzer quench verification test as described in § 1065.370.

(b) Estimate the maximum expected mole fraction of water during emission testing, x_{H2Oexp}. Make this estimate where the humidified NO span gas was introduced in § 1065.370(e)(6). When estimating the maximum expected mole fraction of water, consider the maximum expected water content in combustion air, fuel combustion products, and dilution air (if applicable). If you introduced the humidified NO span gas into the sample system upstream of a sample dryer during the verification test, you need not estimate the maximum expected mole fraction of water and you must set x_{H2Oexp} equal to $x_{H2Omeas}$.

(c) Estimate the maximum expected CO_2 concentration during emission testing, x_{CO2exp}. Make this estimate at the sample system location where the

blended NO and CO_2 span gases are introduced according to § 1065.370(d)(10). When estimating the maximum expected CO_2 concentration, consider the maximum expected CO_2 content in fuel combustion products and dilution air.

(d) Calculate quench as follows:

$$quench = \left(\left(\frac{\frac{x_{NOwet}}{1 - x_{H2Omeas}}}{x_{NOdry}} - 1 \right) \cdot \frac{x_{H2Oexp}}{x_{H2Omeas}} + \left(\frac{x_{NOmeas}}{x_{NOact}} - 1 \right) \cdot \frac{x_{CO2exp}}{x_{CO2act}} \right) \cdot 100\ \%$$

Eq. 1065.675-1

Where:

quench = amount of CLD quench.

x_{NOdry} = concentration of NO upstream of a bubbler, according to § 1065.370(e)(4).

x_{NOwet} = measured concentration of NO downstream of a bubbler, according to § 1065.370(e)(9).

x_{H2Oexp} = maximum expected mole fraction of water during emission testing, according to paragraph (b) of this section.

$x_{H2Omeas}$ = measured mole fraction of water during the quench verification, according to § 1065.370(e)(7).

x_{NOmeas} = measured concentration of NO when NO span gas is blended with CO_2 span gas, according to § 1065.370(d)(10).

x_{NOact} = actual concentration of NO when NO span gas is blended with CO_2 span gas, according to § 1065.370(d)(11) and calculated according to Eq. 1065.675–2.

x_{CO2exp} = maximum expected concentration of CO_2 during emission testing, according to paragraph (c) of this section.

x_{CO2act} = actual concentration of CO_2 when NO span gas is blended with CO_2 span gas, according to § 1065.370(d)(9).

$$x_{NOact} = \left(1 - \frac{x_{CO2act}}{x_{CO2span}} \right) \cdot x_{NOspan}$$

Eq. 1065.675-2

Where:

x_{NOspan} = The NO span gas concentration input to the gas divider, according to § 1065.370(d)(5).

$x_{CO2span}$ = the CO_2 span gas concentration input to the gas divider, according to § 1065.370(d)(4).

Example:

x_{NOdry} = 1800.0 μmol/mol
x_{NOwet} = 1739.6 μmol/mol
x_{H2Oexp} = 0.030 mol/mol
$x_{H2Omeas}$ = 0.030 mol/mol
x_{NOmeas} = 1515.2 μmol/mol
x_{NOspan} = 3001.6 μmol/mol
x_{CO2exp} = 3.2%
$x_{CO2span}$ = 6.1%
x_{CO2act} = 2.98%

$$x_{\mathrm{NOact}} = \left(1 - \frac{2.98}{6.1}\right) \cdot 3001.6 = 1535.24459 \ \mu\mathrm{mol/mol}$$

$$quench = \left(\left(\frac{\frac{1739.6}{1-0.030}}{1800.0} - 1\right) \cdot \frac{0.030}{0.030} + \left(\frac{1515.2}{1535.24459} - 1\right) \cdot \frac{3.2}{2.98}\right) \cdot 100\ \%$$

$quench = (-0.0036655 - 0.014020171) \cdot 100\% = -1.7685671\%$

[73 FR 59340, Oct. 8, 2008, as amended at 76 FR 57466, Sept. 15, 2011; 81 FR 74188, Oct. 25, 2016]

EFFECTIVE DATE NOTE: At 86 FR 34568, June 29, 2021, § 1065.675 was amended, effective July 29, 2021.

§ 1065.680 Adjusting emission levels to account for infrequently regenerating aftertreatment devices.

This section describes how to calculate and apply emission adjustment factors for engines using aftertreatment technology with infrequent regeneration events that may occur during testing. These adjustment factors are typically calculated based on measurements conducted for the purposes of engine certification, and then used to adjust the results of testing related to demonstrating compliance with emission standards. For this section, ''regeneration'' means an intended event during which emission levels change while the system restores aftertreatment performance. For example, exhaust gas temperatures may increase temporarily to remove sulfur from adsorbers or to oxidize accumulated particulate matter in a trap. Also, ''infrequent'' refers to regeneration events that are expected to occur on average less than once over a transient or ramped-modal duty cycle, or on average less than once per mode in a discrete-mode test.

(a) Apply adjustment factors based on whether there is active regeneration during a test segment. The test segment may be a test interval or a full duty cycle, as described in paragraph (b) of this section. For engines subject to standards over more than one duty cycle, you must develop adjustment factors under this section for each separate duty cycle. You must be able to identify active regeneration in a way that is readily apparent during all testing. All adjustment factors for regeneration are additive.

(1) If active regeneration does not occur during a test segment, apply an upward adjustment factor, *UAF*, that will be added to the measured emission rate for that test segment. Use the following equation to calculate *UAF:*

$$UAF_{[\mathrm{cycle}]} = EF_{\mathrm{A}[\mathrm{cycle}]} - EF_{\mathrm{L}[\mathrm{cycle}]}$$

Eq. 1065.680-1

Where:

$EF_{\mathrm{A}[\mathrm{cycle}]}$ = the average emission factor over the test segment as determined in paragraph (a)(4) of this section.

$EF_{\mathrm{L}[\mathrm{cycle}]}$ = measured emissions over a complete test segment in which active regeneration does not occur.

Example:

EF_{ARMC} = 0.15 g/kW·hr

EF_{LRMC} = 0.11 g/kW·hr

$UAF_{RMC} = 0.15 - 0.11 = 0.04$ g/kW·hr

(2) If active regeneration occurs or starts to occur during a test segment, apply a downward adjustment factor, *DAF*, that will be subtracted from the measured emission rate for that test segment. Use the following equation to calculate *DAF:*

$$DAF_{[cycle]} = EF_{H[cycle]} - EF_{A[cycle]}$$

Eq. 1065.680-2

Where:

$EF_{H[cycle]}$ = measured emissions over the test segment from a complete regeneration event, or the average emission rate over multiple complete test segments with regeneration if the complete regeneration event lasts longer than one test segment.

Example:

$EF_{ARMC} = 0.15$ g/kW·hr

$EF_{HRMC} = 0.50$ g/kW·hr

$DAF_{RMC} = 0.50 - 0.15 = 0.35$ g/kW·hr

(3) Note that emissions for a given pollutant may be lower during regeneration, in which case EF_L would be greater than EF_H, and both *UAF* and *DAF* would be negative.

(4) Calculate the average emission factor, EF_A, as follows:

$$EF_{A[cycle]} = F_{[cycle]} \cdot EF_{H[cycle]} + (1.00 - F_{[cycle]}) \cdot EF_{L[cycle]}$$

Eq. 1065.680-3

Where:

$F_{[cycle]}$ = the frequency of the regeneration event during the test segment, expressed in terms of the fraction of equivalent test segments during which active regeneration occurs, as described in paragraph (a)(5) of this section.

Example:

$F_{RMC} = 0.10$

$EF_{ARMC} = 0.10 \cdot 0.50 + (1.00 - 0.10) \cdot 0.11 = 0.15$ g/kW·hr

(5) The frequency of regeneration, *F*, generally characterizes how often a regeneration event occurs within a series of test segments. Determine *F* using the following equation, subject to the provisions of paragraph (a)(6) of this section:

$$F_{[cycle]} = \frac{i_{r[cycle]}}{i_{f[cycle]} + i_{r[cycle]}}$$

Eq. 1065.680-4

Where:

$i_{r[cycle]}$ = the number of successive test segments required to complete an active regeneration, rounded up to the next whole number.

$i_{f[cycle]}$ = the number of test segments from the end of one complete regeneration event to the start of the next active regeneration, without rounding.

Example:

$i_{rRMC} = 2$

$i_{fRMC} = 17.86$

$$F_{\mathrm{RMC}} = \frac{2}{17.86 + 2} = 0.10$$

(6) Use good engineering judgment to determine i_r and i_f, as follows:

(i) For engines that are programmed to regenerate after a specific time interval, you may determine the duration of a regeneration event and the time between regeneration events based on the engine's design parameters. For other engines, determine these values based on measurements from in-use operation or from running repetitive duty cycles in a laboratory.

(ii) For engines subject to standards over multiple duty cycles, such as for transient and steady-state testing, apply this same calculation to determine a value of F for each duty cycle.

(iii) Consider an example for an engine that is designed to regenerate its PM filter 500 minutes after the end of the last regeneration event, with the regeneration event lasting 30 minutes. If the RMC takes 28 minutes, $i_{\mathrm{rRMC}} = 2$ ($30 \div 28 = 1.07$, which rounds up to 2), and $i_{\mathrm{fRMC}} = 500 \div 28 = 17.86$.

(b) Develop adjustment factors for different types of testing as follows:

(1) *Discrete-mode testing*. Develop separate adjustment factors for each test mode (test interval) of a discrete-mode test. When measuring EF_{H}, if a regeneration event has started but is not complete when you reach the end of the sampling time for a test interval, extend the sampling period for that test interval until the regeneration event is complete.

(2) *Ramped-modal and transient testing*. Develop a separate set of adjustment factors for an entire ramped-modal cycle or transient duty cycle. When measuring EF_{H}, if a regeneration event has started but is not complete when you reach the end of the duty cycle, start the next repeat test as soon as possible, allowing for the time needed to complete emission measurement and installation of new filters for PM measurement; in that case EF_{H} is the average emission level for the test segments that included regeneration.

(3) *Accounting for cold-start measurements*. For engines subject to cold-start testing requirements, incorporate cold-start operation into your analysis as follows:

(i) Determine the frequency of regeneration, F, in a way that incorporates the impact of cold-start operation in proportion to the cold-start weighting factor specified in the standard-setting part. You may use good engineering judgment to determine the effect of cold-start operation analytically.

(ii) Treat cold-start testing and hot-start testing together as a single test segment for adjusting measured emission results under this section. Apply the adjustment factor to the composite emission result.

(iii) You may apply the adjustment factor only to the hot-start test result if your aftertreatment technology does not regenerate during cold operation as represented by the cold-start transient duty cycle. If we ask for it, you must demonstrate this by engineering analysis or by test data.

(c) If an engine has multiple regeneration strategies, determine and apply adjustment factors under this section separately for each type of regeneration.

[81 FR 74189, Oct. 25, 2016]

§ 1065.690 Buoyancy correction for PM sample media.

(a) *General*. Correct PM sample media for their buoyancy in air if you weigh them on a balance. The buoyancy correction depends on the sample media density, the density of air, and the density of the calibration weight used to calibrate the balance. The buoyancy correction does not account for the buoyancy of the PM itself, because the mass of PM typically accounts for only (0.01 to 0.10)% of the total weight. A correction to this small fraction of mass would be at the most 0.010%.

(b) *PM sample media density*. Different PM sample media have different densities. Use the known density of your

sample media, or use one of the densities for some common sampling media, as follows:

(1) For PTFE-coated borosilicate glass, use a sample media density of 2300 kg/m^3.

(2) For PTFE membrane (film) media with an integral support ring of polymethylpentene that accounts for 95% of the media mass, use a sample media density of 920 kg/m^3.

(3) For PTFE membrane (film) media with an integral support ring of PTFE, use a sample media density of 2144 kg/m^3.

(c) *Air density*. Because a PM balance environment must be tightly controlled to an ambient temperature of (22 ±1) °C and humidity has an insignificant effect on buoyancy correction, air density is primarily a function of atmospheric pressure. Therefore you may use nominal constant values for temperature and humidity when determining the air density of the balance environment in Eq. 1065.690–2.

(d) *Calibration weight density*. Use the stated density of the material of your metal calibration weight. The example calculation in this section uses a density of 8000 kg/m^3, but you should know the density of your weight from the calibration weight supplier or the balance manufacturer if it is an internal weight.

(e) *Correction calculation*. Correct the PM sample media for buoyancy using the following equations:

$$m_{\text{cor}} = m_{\text{uncor}} \cdot \left(\frac{1 - \dfrac{\rho_{\text{air}}}{\rho_{\text{weight}}}}{1 - \dfrac{\rho_{\text{air}}}{\rho_{\text{media}}}} \right)$$

Eq. 1065.690-1

Where:

m_{cor} = PM mass corrected for buoyancy.

m_{uncor} = PM mass uncorrected for buoyancy.

ρ_{air} = density of air in balance environment.

ρ_{weight} = density of calibration weight used to span balance.

ρ_{media} = density of PM sample media, such as a filter.

$$\rho_{\text{air}} = \frac{p_{\text{abs}} \cdot M_{\text{mix}}}{R \cdot T_{\text{amb}}}$$

Eq. 1065.690-2

Where:

p_{abs} = absolute pressure in balance environment.

M_{mix} = molar mass of air in balance environment.

R = molar gas constant.

T_{amb} = absolute ambient temperature of balance environment.

Example:

p_{abs} = 99.980 kPa

$T_{sat} = T_{dew}$ = 9.5 °C

Using Eq. 1065.645-1,

p_{H20} = 1.1866 kPa

Using Eq. 1065.645-3,

x_{H2O} = 0.011868 mol/mol

Using Eq. 1065.640-9,

M_{mix} = 28.83563 g/mol

R = 8.314472 J/(mol·K)

T_{amb} = 20 °C

$$\rho_{air} = \frac{99.980 \cdot 28.83563}{8.314472 \cdot 293.15}$$

ρ_{air} = 1.18282 kg/m^3

m_{uncorr} = 100.0000 mg

ρ_{weight} = 8000 kg/m^3

ρ_{media} = 920 kg/m^3

$$m_{cor} = 100.0000 \cdot \left(\frac{1 - \frac{1.18282}{8000}}{1 - \frac{1.18282}{920}} \right)$$

$$m_{cor} = 100.1139 \text{ mg}$$

[70 FR 40516, July 13, 2005, as amended at 73 FR 37339, June 30, 2008; 75 FR 23056, Apr. 30, 2010; 79 FR 23805, Apr. 28, 2014; 81 FR 74191, Oct. 25, 2016]

§ 1065.695 Data requirements.

(a) To determine the information we require from engine tests, refer to the standard-setting part and request from your Designated Compliance Officer the format used to apply for certification or demonstrate compliance. We may require different information for different purposes, such as for certification applications, approval requests for alternate procedures, selective enforcement audits, laboratory audits, production-line test reports, and field-test reports.

(b) See the standard-setting part and § 1065.25 regarding recordkeeping.

(c) We may ask you the following about your testing, and we may ask you for other information as allowed under the Act:

(1) What approved alternate procedures did you use? For example:

(i) Partial-flow dilution for proportional PM.

(ii) CARB test procedures.

(iii) ISO test procedures.

(2) What laboratory equipment did you use? For example, the make, model, and description of the following:

(i) Engine dynamometer and operator demand.

(ii) Probes, dilution, transfer lines, and sample preconditioning components.

(iii) Batch storage media (such as the bag material or PM filter material).

(3) What measurement instruments did you use? For example, the make, model, and description of the following:

(i) Speed and torque instruments.

(ii) Flow meters.

(iii) Gas analyzers.

(iv) PM balance.

(4) When did you conduct calibrations and performance checks and what were the results? For example, the dates and results of the following:

(i) Linearity verification.

(ii) Interference checks.

(iii) Response checks.

(iv) Leak checks.

(v) Flow meter checks.

(5) What engine did you test? For example, the following:

(i) Manufacturer.

(ii) Family name on engine label.

(iii) Model.

(iv) Model year.

(v) Identification number.

(6) How did you prepare and configure your engine for testing? Consider the following examples:

(i) Dates, hours, duty cycle and fuel used for service accumulation.

(ii) Dates and description of scheduled and unscheduled maintenance.

(iii) Allowable pressure range of intake restriction.

(iv) Allowable pressure range of exhaust restriction.

(v) Charge air cooler volume.

(vi) Charge air cooler outlet temperature, specified engine conditions and location of temperature measurement.

(vii) Fuel temperature and location of measurement.

(viii) Any aftertreatment system configuration and description.

(ix) Any crankcase ventilation configuration and description (e.g., open, closed, PCV, crankcase scavenged).

(x) Number and type of preconditioning cycles.

(7) How did you test your engine? For example:

(i) Constant speed or variable speed.

(ii) Mapping procedure (step or sweep).

(iii) Continuous or batch sampling for each emission.

(iv) Raw or dilute sampling; any dilution-air background sampling.

(v) Duty cycle and test intervals.

(vi) Cold-start, hot-start, warmed-up running.

(vii) Absolute pressure, temperature, and dewpoint of intake and dilution air.

(viii) Simulated engine loads, curb idle transmission torque value.

(ix) Warm-idle speed value.

(x) Simulated vehicle signals applied during testing.

(xi) Bypassed governor controls during testing.

(xii) Date, time, and location of test (e.g., dynamometer laboratory identification).

(xiii) Cooling medium for engine and charge air.

(xiv) Operating temperatures of coolant, head, and block.

(xv) Natural or forced cool-down and cool-down time.

(xvi) Canister loading.

(8) How did you validate your testing? For example, results from the following:

(i) Duty cycle regression statistics for each test interval.

(ii) Proportional sampling.

(iii) Drift.

(iv) Reference PM sample media in PM-stabilization environment.

(9) How did you calculate results? For example, results from the following:

(i) Drift correction.

(ii) Noise correction.

(iii) ''Dry-to-wet'' correction.

(iv) NMHC, CH_4, and contamination correction.

(v) NO_X humidity correction.

(vi) Brake-specific emission formulation—total mass divided by total work, mass rate divided by power, or ratio of mass to work.

(vii) Rounding emission results.

(10) What were the results of your testing? For example:

(i) Maximum mapped power and speed at maximum power.

(ii) Maximum mapped torque and speed at maximum torque.

(iii) For constant-speed engines: no-load governed speed.

(iv) For constant-speed engines: test torque.

(v) For variable-speed engines: maximum test speed.

(vi) Speed versus torque map.

(vii) Speed versus power map.

(viii) Brake-specific emissions over the duty cycle and each test interval.

(ix) Brake-specific fuel consumption.

(11) What fuel did you use? For example:

(i) Fuel that met specifications of subpart H of this part.

(ii) Alternate fuel.

(iii) Oxygenated fuel.

(12) How did you field test your engine? For example:

(i) Data from paragraphs (c)(1), (3), (4), (5), and (9) of this section.

(ii) Probes, dilution, transfer lines, and sample preconditioning components.

(iii) Batch storage media (such as the bag material or PM filter material).

(iv) Continuous or batch sampling for each emission.

(v) Raw or dilute sampling; any dilution air background sampling.

(vi) Cold-start, hot-start, warmed-up running.

(vii) Intake and dilution air absolute pressure, temperature, dewpoint.

(viii) Curb idle transmission torque value.

(ix) Warm idle speed value, any enhanced idle speed value.

(x) Date, time, and location of test (e.g., identify the testing laboratory).

(xi) Proportional sampling validation.

(xii) Drift validation.

(xiii) Operating temperatures of coolant, head, and block.

(xiv) Vehicle make, model, model year, identification number.

[70 FR 40516, July 13, 2005, as amended at 73 FR 37339, June 30, 2008; 79 FR 23807, Apr. 28, 2014]

EFFECTIVE DATE NOTE: At 86 FR 34568, June 29, 2021, § 1065.695 was amended, effective July 29, 2021.

Subpart H—Engine Fluids, Test Fuels, Analytical Gases and Other Calibration Standards

§ 1065.701 General requirements for test fuels.

(a) *General*. For all emission measurements, use test fuels that meet the specifications in this subpart, unless the standard-setting part directs otherwise. Section 1065.10(c)(1) does not apply with respect to test fuels. Note that the standard-setting parts generally require that you design your emission controls to function properly when using commercially available fuels, even if they differ from the test fuel. Where we specify multiple grades of a certain fuel type (such as diesel fuel with different sulfur concentrations), see the standard-setting part to determine which grade to use.

(b) *Fuels meeting alternate specifications*. We may allow you to use a different test fuel (such as California Phase 2 gasoline) if it does not affect your ability to show that your engines would comply with all applicable emission standards using the fuel specified in this subpart.

(c) *Fuels not specified in this subpart*. If you produce engines that run on a type of fuel (or mixture of fuels) that we do not specify in this subpart, you must get our written approval to establish the appropriate test fuel. See the standard-setting part for provisions related to fuels and fuel mixtures not specified in this subpart.

(1) For engines designed to operate on a single fuel, we will generally allow you to use the fuel if you show us all the following things are true:

(i) Show that your engines will use only the designated fuel in service.

(ii) Show that this type of fuel is commercially available.

(iii) Show that operating the engines on the fuel we specify would be inappropriate, as in the following examples:

(A) The engine will not run on the specified fuel.

(B) The engine or emission controls will not be durable or work properly when operating with the specified fuel.

(C) The measured emission results would otherwise be substantially unrepresentative of in-use emissions.

(2) For engines that are designed to operate on different fuel types, the provisions of paragraphs (c)(1)(ii) and (iii) of this section apply with respect to each fuel type.

(3) For engines that are designed to operate on different fuel types as well as continuous mixtures of those fuels, we may require you to test with either the worst-case fuel mixture or the most representative fuel mixture, unless the standard-setting part specifies otherwise.

(d) *Fuel specifications*. Specifications in this section apply as follows:

(1) Measure and calculate values as described in the appropriate reference procedure. Record and report final values expressed to at least the same number of decimal places as the applicable limit value. The right-most digit for each limit value is significant unless specified otherwise. For example, for a specified distillation temperature of 60 °C, determine the test fuel's value to at least the nearest whole number.

(2) The fuel parameters specified in this subpart depend on measurement procedures that are incorporated by reference. For any of these procedures, you may instead rely upon the procedures identified in 40 CFR part 1090 for measuring the same parameter. For example, we may identify different reference procedures for measuring gasoline parameters in 40 CFR 1090.1360.

(e) Two-stroke fuel/oil mixing. For two-stroke engines, use a fuel/oil mixture meeting the manufacturer's specifications.

(f) *Service accumulation and field testing fuels*. If we do not specify a service-accumulation or field-testing fuel in the standard-setting part, use an appropriate commercially available fuel such as those meeting minimum specifications from the following table:

TABLE 1 OF § 1065.701—EXAMPLES OF SERVICE-ACCUMULATION AND FIELD-TESTING FUELS

Fuel category	Subcategory	Reference procedure [1]
Diesel	Light distillate and light blends with residual	ASTM D975
	Middle distillate	ASTM D6985

TABLE 1 OF § 1065.701—EXAMPLES OF SERVICE-ACCUMULATION AND FIELD-TESTING FUELS—Continued

Fuel category	Subcategory	Reference procedure [1]
	Biodiesel (B100)	ASTM D6751
Intermediate and residual fuel	All	See § 1065.705
Gasoline	Automotive gasoline	ASTM D4814
	Automotive gasoline with ethanol concentration up to 10 volume %..	ASTM D4814
Alcohol	Ethanol (E51–83)	ASTM D5798
	Methanol (M70–M85)	ASTM D5797
Aviation fuel	Aviation gasoline	ASTM D910
	Gas turbine	ASTM D1655
	Jet B wide cut	ASTM D6615
Gas turbine fuel	General	ASTM D2880

[1] ASTM specifications are incorporated by reference in § 1065.1010.

[70 FR 40516, July 13, 2005, as amended at 73 FR 37339, June 30, 2008; 73 FR 59341, Oct. 8, 2008; 75 FR 23057, Apr. 30, 2010;79 FR 23807, Apr. 28, 2014; 85 FR 78468, Dec. 4, 2020]

EFFECTIVE DATE NOTE: At 86 FR 34568, June 29, 2021, § 1065.701 was amended, effective July 29, 2021.

§ 1065.703 Distillate diesel fuel.

(a) Distillate diesel fuels for testing must be clean and bright, with pour and cloud points adequate for proper engine operation.

(b) There are three grades of #2 diesel fuel specified for use as a test fuel. See the standard-setting part to determine which grade to use. If the standard-setting part does not specify which grade to use, use good engineering judgment to select the grade that represents the fuel on which the engines will operate in use. The three grades are specified in the following table:

TABLE 1 OF § 1065.703—TEST FUEL SPECIFICATIONS FOR DISTILLATE DIESEL FUEL

Property	Unit	Ultra low sulfur	Low sulfur	High sulfur	Reference procedure [a]
Cetane Number		40–50	40–50	40–50	ASTM D613
Distillation range:					
Initial boiling point	°C	171–204	171–204	171–204	ASTM D86
10 pct. point		204–238	204–238	204–238	
50 pct. point		243–282	243–282	243–282	
90 pct. point		293–332	293–332	293–332	
Endpoint		321–366	321–366	321–366	
Gravity	°API	32–37	32–37	32–37	ASTM D4052
Total sulfur	mg/kg	7–15	300–500	800–2500	ASTM D2622, ASTM D5453, or ASTM D7039
Aromatics, min. (Remainder shall be paraffins, naphthenes, and olefins).	g/kg	100	100	100	ASTM D5186
Flashpoint, min.	°C	54	54	54	ASTM D93
Kinematic Viscosity	mm^2/s	2.0–3.2	2.0–3.2	2.0–3.2	ASTM D445

[a] Incorporated by reference, see § 1065.1010. See § 1065.701(d) for other allowed procedures.

(c) You may use the following nonmetallic additives with distillate diesel fuels:

(1) Cetane improver.
(2) Metal deactivator.
(3) Antioxidant, dehazer.
(4) Rust inhibitor.
(5) Pour depressant.
(6) Dye.
(7) Dispersant.
(8) Biocide.

[70 FR 40516, July 13, 2005, as amended at 73 FR 37340, June 30, 2008; 73 FR 59341, Oct. 8, 2008; 75 FR 23057, Apr. 30, 2010; 77 FR 2464, Jan. 18, 2012;79 FR 23807, Apr. 28, 2014; 85 FR 78468, Dec. 4, 2020]

EFFECTIVE DATE NOTE: At 86 FR 34569, June 29, 2021, § 1065.703 was amended, effective July 29, 2021.

§ 1065.705 Residual and intermediate residual fuel.

This section describes the specifications for fuels meeting the definition of residual fuel in 40 CFR 1090.80, including fuels marketed as intermediate fuel. Residual fuels for service accumulation and any testing must meet the following specifications:

(a) The fuel must be a commercially available fuel that is representative of the fuel that will be used by the engine in actual use.

(b) The fuel must be free of used lubricating oil. Demonstrate this by showing that the fuel meets at least one of the following specifications.

(1) Zinc is at or below 15 mg per kg of fuel based on the procedures specified in IP470, IP501, or ISO 8217 (incorporated by reference in § 1065.1010).

(2) Phosphorus is at or below 15 mg per kg of fuel based on the procedures specified in IP500, IP501, or ISO 8217 (incorporated by reference in § 1065.1010).

(3) Calcium is at or below 30 mg per kg of fuel based on the procedures specified in IP470, IP501, or ISO 8217 (incorporated by reference in § 1065.1010).

(c) The fuel must meet the specifications for one of the categories in the following table:

TABLE 1 OF § 1065.705—SERVICE ACCUMULATION AND TEST FUEL SPECIFICATIONS FOR RESIDUAL FUEL

Property	Unit	Category ISO–F–										Reference Procedure[1]
		RMA 30	RMB 30	RMD 80	RME 180	RMF 180	RMG 380	RMH 380	RMK 380	RMH 700	RMK 700	
Density at 15 °C, max	kg/m³	960.0	975.0	980.0	991.0		991.0		1010.0	991.0	1010.0	ISO 3675 or ISO 12185 (see also ISO 8217).
Kinematic viscosity at 50 °C, max.	cSt	30.0		80.0	180.0		380.0		700.0			ISO 3104.
Flash point, min	°C	60		60	60		60		60			ISO 2719 (see also ISO 8217).
Pour point (upper):												ISO 3016.
Winter quality, max	°C	0	24	30	30		30		30			
Summer quality, max		6	24	30	30		30		30			
Carbon residue, max	(kg/kg) %	10		14	15	20	18	22	22			ISO 10370.
Ash, max	(kg/kg) %	0.10		0.10	0.10	0.15	0.15		0.15			ISO 6245.
Water, max	(m³/m³) %	0.5		0.5	0.5		0.5		0.5			ISO 3733.
Sulfur, max	(kg/kg) %	3.50		4.00	4.50		4.50		4.50			ISO 8754 or ISO 14596 (see also ISO 8217).
Vanadium, max	mg/kg	150		350	200	500	300	600	600			ISO 14597 or IP 501 or IP 470 (see also ISO 8217).
Total sediment potential, max	(kg/kg) %	0.10		0.10	0.10		0.10		0.10			ISO 10307–2 (see also ISO 8217).
Aluminum plus silicon, max	mg/kg	80		80	80		80		80			ISO 10478 or IP 501 or IP 470 (see also ISO 8217:2012).

[1] ISO procedures are incorporated by reference in § 1065.1010. See § 1065.701(d) for other allowed procedures.

[79 FR 23808, Apr. 28, 2014, as amended at 85 FR 78468, Dec. 4, 2020]

EFFECTIVE DATE NOTE: At 86 FR 34569, June 29, 2021, § 1065.705 was amended, effective July 29, 2021.

§ 1065.710 Gasoline.

(a) This section specifies test fuel properties for gasoline with ethanol (low-level blend only) and for gasoline without ethanol. Note that the ''fuel type'' for the fuels specified in paragraphs (b) and (c) of this section is considered to be gasoline. In contrast, fuels with higher ethanol concentrations, such as fuel containing 82 percent ethanol, are considered to be ethanol fuels rather than gasoline. We specify some test fuel parameters that apply uniquely for low-temperature testing and for testing at altitudes above 1,219 m. For all other testing, use the test fuel parameters specified for general testing. Unless the standard-setting part specifies otherwise, use the fuel specified in paragraph (c) of this section for general testing.

(b) The following specifications apply for a blended gasoline test fuel that has nominally 10% ethanol (commonly called E10 test fuel):

(1) Prepare the blended test fuel from typical refinery gasoline blending components. You may not use pure compounds, except as follows:

(i) You may use neat ethanol as a blendstock.

(ii) You may adjust the test fuel's vapor pressure by adding butane.

(iii) You may adjust the test fuel's benzene content by adding benzene.

(iv) You may adjust the test fuel's sulfur content by adding sulfur compounds that are representative of those found with in-use fuels.

(2) Table 1 of this section identifies limit values consistent with the units in the reference procedure for each fuel property. These values are generally specified in international units. Values presented in parentheses are for information only. Table 1 follows:

TABLE 1 OF § 1065.710—TEST FUEL SPECIFICATIONS FOR A LOW-LEVEL ETHANOL-GASOLINE BLEND

Property	Unit	Specification			Reference procedure [1]
		General testing	Low-temperature testing	High altitude testing	
Antiknock Index (R + M)/2		87.0—88.4 [2]		87.0 Minimum.	ASTM D2699 and D2700.
Sensitivity (R–M)		7.5 Minimum			ASTM D2699 and D2700.
Dry Vapor Pressure Equivalent (*DVPE*) [3] [4].	kPa (psi)	60.0–63.4 (8.7–9.2)	77.2–81.4 (11.2–11.8)	52.4–55.2 (7.6–8.0)	ASTM D5191.
Distillation [4] 10% evaporated	°C (°F)	49–60 (120–140)	43–54 (110–130)	49–60 (120–140)	ASTM D86.
50% evaporated	°C (°F)	88–99 (190–210).			
90% evaporated	°C (°F)	157–168 (315–335).			
Evaporated final boiling point	°C (°F)	193–216 (380–420).			
Residue	milliliter	2.0 Maximum.			
Total Aromatic Hydrocarbons	volume %	21.0–25.0			ASTM D5769.
C6 Aromatics (benzene)	volume %	0.5–0.7.			
C7 Aromatics (toluene)	volume %	5.2–6.4.			
C8 Aromatics	volume %	5.2–6.4.			
C9 Aromatics	volume %	5.2–6.4.			
C10 + Aromatics	volume %	4.4–5.6.			
Olefins [5]	mass %	4.0–10.0			ASTM D6550.
Ethanol blended	volume %	9.6–10.0			See paragraph (b)(3) of this section.
Ethanol confirmatory [6]	volume %	9.4–10.2			ASTM D4815 or D5599.
Total Content of Oxygenates Other than Ethanol [6].	volume %	0.1 Maximum			ASTM D4815 or D5599.
Sulfur	mg/kg	8.0–11.0			ASTM D2622, D5453 or D7039.
Lead	g/liter	0.0026 Maximum			ASTM D3237.
Phosphorus	g/liter	0.0013 Maximum			ASTM D3231.
Copper Corrosion		No. 1 Maximum			ASTM D130.
Solvent-Washed Gum Content	mg/100 milliliter	3.0 Maximum			ASTM D381.
Oxidation Stability	minute	1000 Minimum			ASTM D525.

[1] ASTM procedures are incorporated by reference in § 1065.1010. See § 1065.701(d) for other allowed procedures.

[2] Octane specifications apply only for testing related to exhaust emissions. For engines or vehicles that require the use of premium fuel, as described in paragraph (d) of this section, the adjusted specification for antiknock index is a minimum value of 91.0; no maximum value applies. All other specifications apply for this high-octane fuel.

[3] Calculate dry vapor pressure equivalent, *DVPE*, based on the measured total vapor pressure, p_T, using the following equation: *DVPE* (kPa) = 0.956 · p_T—2.39 or *DVPE* (psi) = 0.956 · p_T—0.347. *DVPE* is intended to be equivalent to Reid Vapor Pressure using a different test method.

[4] Parenthetical values are shown for informational purposes only.

[5] The reference procedure prescribes measurement of olefin concentration in mass %. Multiply this result by 0.857 and round to the first decimal place to determine the olefin concentration in volume %.

[6] ASTM D5599 prescribes concentration measurements for ethanol and other oxygenates in mass %. Convert results to volume % as specified in Section 14.3 of ASTM D4815.

(3) The ethanol-blended specification in Table 1 of this section is based on the volume % ethanol content of the fuel as determined during blending by the fuel supplier and as stated by the supplier at the time of fuel delivery. Use good engineering judgment to determine the volume % of ethanol based on the volume of each blendstock. We recommend using a flow-based or gravimetric procedure that has an accuracy and repeatability of ±0.1%.

(c) The specifications of this paragraph (c) apply for testing with neat gasoline. This is sometimes called indolene or E0 test fuel. Gasoline for testing must have octane values that represent commercially available fuels for the appropriate application. Test fuel specifications apply as follows:

TABLE 2 OF § 1065.710—TEST FUEL SPECIFICATIONS FOR NEAT (E0) GASOLINE

Property	Unit	Specification		Reference procedure [1]
		General testing	Low-temperature testing	
Distillation Range:				
Evaporated initial boiling point	°C	24–35[2]	24–36	ASTM D86
10% evaporated		49–57	37–48.	
50% evaporated		93–110	82–101.	
90% evaporated		149–163	158–174.	
Evaporated final boiling point		Maximum, 213	Maximum, 212.	
Hydrocarbon composition:				
Olefins	volume %	Maximum, 10	Maximum, 17.5	ASTM D1319
Aromatics		Maximum, 35	Maximum, 30.4.	
Saturates		Remainder	Remainder.	
Lead	g/liter	Maximum, 0.013	Maximum, 0.013	ASTM D3237
Phosphorous	g/liter	Maximum, 0.0013	Maximum, 0.005	ASTM D3231
Total sulfur	mg/kg	Maximum, 80	Maximum, 80	ASTM D2622
Dry vapor pressure equivalent [3]	kPa (psi)	60.0–63.4 [2 4] (8.7–9.2).	77.2–81.4 (11.2–11.8).	ASTM D5191

[1] ASTM procedures are incorporated by reference in § 1065.1010. See § 1065.701(d) for other allowed procedures.

[2] For testing at altitudes above 1219 m, the specified initial boiling point range is (23.9 to 40.6) °C and the specified volatility range is (52.0 to 55.2) kPa ((7.5 to 8.0) psi).

[3] Calculate dry vapor pressure equivalent, *DVPE*, based on the measured total vapor pressure, p_T, in kPa using the following equation: *DVPE* (kPa) = 0.956 · p_T − 2.39 or *DVPE* (psi) = 0.956 · p_T − 0.347. *DVPE* is intended to be equivalent to Reid Vapor Pressure using a different test method.

[4] For testing unrelated to evaporative emissions, the specified range is (55.2 to 63.4) kPa ((8.0 to 9.2) psi).

(d) Use the high-octane gasoline specified in paragraph (b) of this section only for engines or vehicles for which the manufacturer conditions the warranty on the use of premium gasoline.

[79 FR 23809, Apr. 28, 2014, as amended at 80 FR 9119, Feb. 19, 2015]

EFFECTIVE DATE NOTE: At 86 FR 34571, June 29, 2021, § 1065.710 was amended, effective July 29, 2021.

§ 1065.715 Natural gas.

(a) Except as specified in paragraph (b) of this section, natural gas for testing must meet the specifications in the following table:

TABLE 1 OF § 1065.715—TEST FUEL SPECIFICATIONS FOR NATURAL GAS

Property	Value [1]
Methane, CH_4	Minimum, 0.87 mol/mol.
Ethane, C_2H_6	Maximum, 0.055 mol/mol.
Propane, C_3H_8	Maximum, 0.012 mol/mol.

TABLE 1 OF § 1065.715—TEST FUEL SPECIFICATIONS FOR NATURAL GAS—Continued

Property	Value [1]
Butane, C_4H_{10}	Maximum, 0.0035 mol/mol.
Pentane, C_5H_{12}	Maximum, 0.0013 mol/mol.
C_6 and higher	Maximum, 0.001 mol/mol.
Oxygen	Maximum, 0.001 mol/mol.
Inert gases (sum of CO_2 and N_2)	Maximum, 0.051 mol/mol.

[1] Demonstrate compliance with fuel specifications based on the reference procedures in ASTM D1945 (incorporated by reference in § 1065.1010), or on other measurement procedures using good engineering judgment. See § 1065.701(d) for other allowed procedures.

(b) In certain cases you may use test fuel not meeting the specifications in paragraph (a) of this section, as follows:

(1) You may use fuel that your in-use engines normally use, such as pipeline natural gas.

(2) You may use fuel meeting alternate specifications if the standard-setting part allows it.

(3) You may ask for approval to use fuel that does not meet the specifications in paragraph (a) of this section, but only if using the fuel would not adversely affect your ability to demonstrate compliance with the applicable standards.

(c) When we conduct testing using natural gas, we will use fuel that meets the specifications in paragraph (a) of this section.

(d) At ambient conditions, natural gas must have a distinctive odor detectable down to a concentration in air not more than one-fifth the lower flammable limit.

[73 FR 37342, June 30, 2008, as amended at 79 FR 23811, Apr. 28, 2014]

EFFECTIVE DATE NOTE: At 86 FR 34573, June 29, 2021, § 1065.715 was amended, effective July 29, 2021.

§ 1065.720 Liquefied petroleum gas.

(a) Except as specified in paragraph (b) of this section, liquefied petroleum gas for testing must meet the specifications in the following table:

TABLE 1 OF § 1065.720—TEST FUEL SPECIFICATIONS FOR LIQUEFIED PETROLEUM GAS

Property	Value	Reference procedure [1]
Propane, C_3H_8	Minimum, 0.85 m^3/m^3	ASTM D2163.
Vapor pressure at 38 °C	Maximum, 1400 kPa	ASTM D1267or D2598.[2]
Volatility residue (evaporated temperature, 35 °C)	Maximum, −38 °C	ASTM D1837.
Butanes	Maximum, 0.05 m^3/m^3	ASTM D2163.
Butenes	Maximum, 0.02 m^3/m^3	ASTM D2163.
Pentenes and heavier	Maximum, 0.005 m^3/m^3	ASTM D2163.
Propene	Maximum, 0.1 m^3/m^3	ASTM D2163.
Residual matter (residue on evaporation of 100 ml oil stain observation).	Maximum, 0.05 ml pass[3]	ASTM D2158.
Corrosion, copper strip	Maximum, No. 1	ASTM D1838.
Sulfur	Maximum, 80 mg/kg	ASTM D2784.
Moisture content	pass	ASTM D2713.

[1] ASTM procedures are incorporated by reference in § 1065.1010. See § 1065.701(d) for other allowed procedures.
[2] If these two test methods yield different results, use the results from ASTM D1267.
[3] The test fuel must not yield a persistent oil ring when you add 0.3 ml of solvent residue mixture to a filter paper in 0.1 ml increments and examine it in daylight after two minutes.

(b) In certain cases you may use test fuel not meeting the specifications in paragraph (a) of this section, as follows:

(1) You may use fuel that your in-use engines normally use, such as commercial-quality liquefied petroleum gas.

(2) You may use fuel meeting alternate specifications if the standard-setting part allows it.

(3) You may ask for approval to use fuel that does not meet the specifications in paragraph (a) of this section, but only if using the fuel would not adversely affect your ability to demonstrate compliance with the applicable standards.

(c) When we conduct testing using liquefied petroleum gas, we will use

fuel that meets the specifications in paragraph (a) of this section.

(d) At ambient conditions, liquefied petroleum gas must have a distinctive odor detectable down to a concentration in air not more than one-fifth the lower flammable limit.

[73 FR 37342, June 30, 2008, as amended at 79 FR 23811, Apr. 28, 2014]

EFFECTIVE DATE NOTE: At 86 FR 34573, June 29, 2021, § 1065.720 was amended, effective July 29, 2021.

§ 1065.725 High-level ethanol-gasoline blends.

For testing vehicles capable of operating on a high-level ethanol-gasoline blend, create a test fuel as follows:

(a) Add ethanol to an E10 fuel meeting the specifications described in § 1065.710 until the ethanol content of the blended fuel is between 80 and 83 volume %.

(b) You may alternatively add ethanol to a gasoline base fuel with no ethanol if you can demonstrate that such a base fuel blended with the proper amount of ethanol would meet all the specifications for E10 test fuel described in § 1065.710, other than the ethanol content.

(c) The ethanol used for blending must be either denatured fuel ethanol meeting the specifications in 40 CFR 1090.270, or fuel-grade ethanol with no denaturant. Account for the volume of any denaturant when calculating volumetric percentages.

(d) The blended test fuel must have a dry vapor pressure equivalent between 41.5 and 45.1 kPa (6.0 and 6.5 psi) when measured using the procedure specified in § 1065.710. You may add commercial grade butane as needed to meet this specification.

[79 FR 23811, Apr. 28, 2014, as amended at 85 FR 78468, Dec. 4, 2020]

§ 1065.735 Diesel exhaust fluid.

(a) Use commercially available diesel exhaust fluid that represents the product that will be used in your in-use engines.

(b) Diesel exhaust fluid for testing must generally conform to the specifications referenced in the definition of ''diesel exhaust fluid'' in § 1065.1001. Use marine-grade diesel exhaust fluid only for marine engines.

[81 FR 74191, Oct. 25, 2016]

§ 1065.740 Lubricants.

(a) Use commercially available lubricating oil that represents the oil that will be used in your engine in use.

(b) You may use lubrication additives, up to the levels that the additive manufacturer recommends.

§ 1065.745 Coolants.

(a) You may use commercially available antifreeze mixtures or other coolants that will be used in your engine in use.

(b) For laboratory testing of liquid-cooled engines, you may use water with or without rust inhibitors.

(c) For coolants allowed in paragraphs (a) and (b) of this section, you may use rust inhibitors and additives required for lubricity, up to the levels that the additive manufacturer recommends.

§ 1065.750 Analytical gases.

Analytical gases must meet the accuracy and purity specifications of this section, unless you can show that other specifications would not affect your ability to show that you comply with all applicable emission standards.

(a) Subparts C, D, F, and J of this part refer to the following gas specifications:

(1) Use purified gases to zero measurement instruments and to blend with calibration gases. Use gases with contamination no higher than the highest of the following values in the gas cylinder or at the outlet of a zero-gas generator:

(i) 2% contamination, measured relative to the flow-weighted mean concentration expected at the standard. For example, if you would expect a flow-weighted CO concentration of 100.0 μmol/mol, then you would be allowed to use a zero gas with CO contamination less than or equal to 2.000 μmol/mol.

(ii) Contamination as specified in the following table:

TABLE 1 OF § 1065.750—GENERAL SPECIFICATIONS FOR PURIFIED GASES [1]

Constituent	Purified air	Purified N_2
THC (C_1-equivalent)	≤0.05 μmol/mol	≤0.05 μmol/mol.
CO	≤1 μmol/mol	≤1 μmol/mol.
CO_2	≤10 μmol/mol	≤10 μmol/mol.
O_2	0.205 to 0.215 mol/mol	≤2 μmol/mol.
NO_X	≤0.02 μmol/mol	≤0.02 μmol/mol.
N_2O[2]	≤0.02 μmol/mol	≤0.02 μmol/mol.

[1] We do not require these levels of purity to be NIST-traceable.
[2] The N_2O limit applies only if the standard-setting part requires you to report N_2O or certify to an N_2O standard.

(2) Use the following gases with a FID analyzer:

(i) *FID fuel*. Use FID fuel with a stated H_2 concentration of (0.39 to 0.41) mol/mol, balance He or N_2, and a stated total hydrocarbon concentration of 0.05 μmol/mol or less. For GC–FIDs that measure methane (CH_4) using a FID fuel that is balance N_2, perform the CH_4 measurement as described in SAE J1151 (incorporated by reference in § 1065.1010).

(ii) *FID burner air*. Use FID burner air that meets the specifications of purified air in paragraph (a)(1) of this section. For field testing, you may use ambient air.

(iii) *FID zero gas*. Zero flame-ionization detectors with purified gas that meets the specifications in paragraph (a)(1) of this section, except that the purified gas O_2 concentration may be any value. Note that FID zero balance gases may be any combination of purified air and purified nitrogen. We recommend FID analyzer zero gases that contain approximately the expected flow-weighted mean concentration of O_2 in the exhaust sample during testing.

(iv) *FID propane span gas*. Span and calibrate THC FID with span concentrations of propane, C_3H_8. Calibrate on a carbon number basis of one (C_1). For example, if you use a C_3H_8 span gas of concentration 200 μmol/mol, span a FID to respond with a value of 600 μmol/mol. Note that FID span balance gases may be any combination of purified air and purified nitrogen. We recommend FID analyzer span gases that contain approximately the flow-weighted mean concentration of O_2 expected during testing. If the expected O_2 concentration in the exhaust sample is zero, we recommend using a balance gas of purified nitrogen.

(v) *FID CH_4 span gas*. If you always span and calibrate a CH_4 FID with a nonmethane cutter, then span and calibrate the FID with span concentrations of CH_4. Calibrate on a carbon number basis of one (C_1). For example, if you use a CH_4 span gas of concentration 200 μmol/mol, span a FID to respond with a value of 200 μmol/mol. Note that FID span balance gases may be any combination of purified air and purified nitrogen. We recommend FID analyzer span gases that contain approximately the expected flow-weighted mean concentration of O_2 in the exhaust sample during testing. If the expected O_2 concentration in the exhaust sample is zero, we recommend using a balance gas of purified nitrogen.

(3) Use the following gas mixtures, with gases traceable within ±1% of the NIST-accepted value or other gas standards we approve:

(i) CH_4, balance purified air and/or N_2 (as applicable).

(ii) C_2H_6, balance purified air and/or N_2 (as applicable).

(iii) C_3H_8, balance purified air and/or N_2 (as applicable).

(iv) CO, balance purified N_2.

(v) CO_2, balance purified N_2.

(vi) NO, balance purified N_2.

(vii) NO_2, balance purified air.

(viii) O_2, balance purified N_2.

(ix) C_3H_8, CO, CO_2, NO, balance purified N_2.

(x) C_3H_8, CH_4, CO, CO_2, NO, balance purified N_2.

(xi) N_2O, balance purified air and/or N_2 (as applicable).

(xii) CH_4, C_2H_6, balance purified air and/or N_2 (as applicable).

(xiii) CH_4, CH_2O, CH_2O_2, C_2H_2, C_2H_4, C_2H_4O, C_2H_6, C_3H_8, C_3H_6, CH_4O, and C_4H_{10}. You may omit individual gas constituents from this gas mixture. If your gas mixture contains oxygenated

hydrocarbon, your gas mixture must be in balance purified N_2, otherwise you may use balance purified air.

(4) You may use gases for species other than those listed in paragraph (a)(3) of this section (such as methanol in air, which you may use to determine response factors), as long as they are traceable to within ±3% of the NIST-accepted value or other similar standards we approve, and meet the stability requirements of paragraph (b) of this section.

(5) You may generate your own calibration gases using a precision blending device, such as a gas divider, to dilute gases with purified N_2 or purified air. If your gas divider meets the specifications in §1065.248, and the gases being blended meet the requirements of paragraphs (a)(1) and (3) of this section, the resulting blends are considered to meet the requirements of this paragraph (a).

(b) Record the concentration of any calibration gas standard and its expiration date specified by the gas supplier.

(1) Do not use any calibration gas standard after its expiration date, except as allowed by paragraph (b)(2) of this section.

(2) Calibration gases may be relabeled and used after their expiration date as follows:

(i) Alcohol/carbonyl calibration gases used to determine response factors according to subpart I of this part may be relabeled as specified in subpart I of this part.

(ii) Other gases may be relabeled and used after the expiration date only if we approve it in advance.

(c) Transfer gases from their source to analyzers using components that are dedicated to controlling and transferring only those gases. For example, do not use a regulator, valve, or transfer line for zero gas if those components were previously used to transfer a different gas mixture. We recommend that you label regulators, valves, and transfer lines to prevent contamination. Note that even small traces of a gas mixture in the dead volume of a regulator, valve, or transfer line can diffuse upstream into a high-pressure volume of gas, which would contaminate the entire high-pressure gas source, such as a compressed-gas cylinder.

(d) To maintain stability and purity of gas standards, use good engineering judgment and follow the gas standard supplier's recommendations for storing and handling zero, span, and calibration gases. For example, it may be necessary to store bottles of condensable gases in a heated environment.

[70 FR 40516, July 13, 2005, as amended at 73 FR 37343, June 30, 2008; 74 FR 56518, Oct. 30, 2009; 75 FR 68465, Nov. 8, 2010; 76 FR 57467, Sept. 15, 2011; 79 FR 23811, Apr. 28, 2014; 81 FR 74191, Oct. 25, 2016]

EFFECTIVE DATE NOTE: At 86 FR 34574, June 29, 2021, §1065.750 was amended, effective July 29, 2021.

§1065.790 Mass standards.

(a) *PM balance calibration weights*. Use PM balance calibration weights that are certified as NIST-traceable within 0.1% uncertainty. Calibration weights may be certified by any calibration lab that maintains NIST-traceability. Make sure your highest calibration weight has no greater than ten times the mass of an unused PM-sample medium.

(b) *Dynamometer calibration weights*. [Reserved]

[70 FR 40516, July 13, 2005, as amended at 76 FR 57467, Sept. 15, 2011]

EFFECTIVE DATE NOTE: At 86 FR 34574, June 29, 2021, §1065.790 was amended, effective July 29, 2021.

Subpart I—Testing With Oxygenated Fuels

§1065.801 Applicability.

(a) This subpart applies for testing with oxygenated fuels. Unless the standard-setting part specifies otherwise, the requirements of this subpart do not apply for fuels that contain less than 25% oxygenated compounds by volume. For example, you generally do not need to follow the requirements of this subpart for tests performed using a fuel containing 10% ethanol and 90% gasoline, but you must follow these requirements for tests performed using a fuel containing 85% ethanol and 15% gasoline.

(b) Section 1065.805 applies for all other testing that requires measurement of any alcohols or carbonyls.

(c) This subpart specifies sampling procedures and calculations that are different than those used for non-oxygenated fuels. All other test procedures of this part 1065 apply for testing with oxygenated fuels.

§ 1065.805 Sampling system.

(a) Dilute engine exhaust, and use batch sampling to collect proportional flow-weighted dilute samples of the applicable alcohols and carbonyls. You may not use raw sampling for alcohols and carbonyls.

(b) You may collect background samples for correcting dilution air for background concentrations of alcohols and carbonyls.

(c) Maintain sample temperatures within the dilution tunnel, probes, and sample lines high enough to prevent aqueous condensation up to the point where a sample is collected to prevent loss of the alcohols and carbonyls by dissolution in condensed water. Use good engineering judgment to ensure that surface reactions of alcohols and carbonyls do not occur, as surface decomposition of methanol has been shown to occur at temperatures greater than 120 °C in exhaust from methanol-fueled engines.

(d) You may bubble a sample of the exhaust through water to collect alcohols for later analysis. You may also use a photoacoustic analyzer to quantify ethanol and methanol in an exhaust sample as described in § 1065.269.

(e) Sample the exhaust through cartridges impregnated with 2,4-dinitrophenylhydrazine to collect carbonyls for later analysis. If the standard-setting part specifies a duty cycle that has multiple test intervals (such as multiple engine starts or an engine-off soak phase), you may proportionally collect a single carbonyl sample for the entire duty cycle. For example, if the standard-setting part specifies a six-to-one weighting of hot-start to cold-start emissions, you may collect a single carbonyl sample for the entire duty cycle by using a hot-start sample flow rate that is six times the cold-start sample flow rate.

(f) You may sample alcohols or carbonyls using ''California Non-Methane Organic Gas Test Procedures'' (incorporated by reference in § 1065.1010). If you use this method, follow its calculations to determine the mass of the alcohol/carbonyl in the exhaust sample, but follow subpart G of this part for all other calculations (40 CFR part 1066, subpart G, for vehicle testing).

(g) Use good engineering judgment to sample other oxygenated hydrocarbon compounds in the exhaust.

[70 FR 40516, July 13, 2005, as amended at 73 FR 37343, June 30, 2008; 79 FR 23812, Apr. 28, 2014]

§ 1065.845 Response factor determination.

Since FID analyzers generally have an incomplete response to alcohols and carbonyls, determine each FID analyzer's alcohol/carbonyl response factor ($RF_{OHCi[THC\text{-}FID]}$) after FID optimization to subtract those responses from the FID reading. Use the most recently determined alcohol/carbonyl response factors to compensate for alcohol/carbonyl response. You are not required to determine the response factor for a compound unless you will subtract its response to compensate for a response.

(a) You may generate response factors as described in paragraph (b) of this section, or you may use the following default response factors, consistent with good engineering judgment:

TABLE 1 OF § 1065.845—DEFAULT VALUES FOR THC FID RESPONSE FACTOR RELATIVE TO PROPANE ON A C_1-EQUIVALENT BASIS

Compound	Response factor (*RF*)
acetaldehyde	0.50
ethanol	0.75
formaldehyde	0.00
methanol	0.63
propanol	0.85

(b) Determine the alcohol/carbonyl response factors as follows:

(1) Select a C_3H_8 span gas that meets the specifications of § 1065.750. Note that FID zero and span balance gases may be any combination of purified air or purified nitrogen that meets the specifications of § 1065.750. We recommend FID analyzer zero and span

gases that contain approximately the flow-weighted mean concentration of O_2 expected during testing. Record the C_3H_8 concentration of the gas.

(2) Select or prepare an alcohol/carbonyl calibration gas that meets the specifications of §1065.750 and has a concentration typical of the peak concentration expected at the hydrocarbon standard. Record the calibration concentration of the gas.

(3) Start and operate the FID analyzer according to the manufacturer's instructions.

(4) Confirm that the FID analyzer has been calibrated using C_3H_8. Calibrate on a carbon number basis of one (C_1). For example, if you use a C_3H_8 span gas of concentration 200 μmol/mol, span the FID to respond with a value of 600 μmol/mol.

(5) Zero the FID. Note that FID zero and span balance gases may be any combination of purified air or purified nitrogen that meets the specifications of §1065.750. We recommend FID analyzer zero and span gases that contain approximately the flow-weighted mean concentration of O_2 expected during testing.

(6) Span the FID with the C_3H_8 span gas that you selected under paragraph (a)(1) of this section.

(7) Introduce at the inlet of the FID analyzer the alcohol/carbonyl calibration gas that you selected under paragraph (a)(2) of this section.

(8) Allow time for the analyzer response to stabilize. Stabilization time may include time to purge the analyzer and to account for its response.

(9) While the analyzer measures the alcohol/carbonyl concentration, record 30 seconds of sampled data. Calculate the arithmetic mean of these values.

(10) Divide the mean measured concentration by the recorded span concentration of the alcohol/carbonyl calibration gas on a C_1-equivalent basis. The result is the FID analyzer's response factor for alcohol/carbonyl, $RF_{OHCi[THC\text{-}FID]}$ on a C_1-equivalent basis.

(c) Alcohol/carbonyl calibration gases must remain within ±2% of the labeled concentration. You must demonstrate the stability based on a quarterly measurement procedure with a precision of ±2% percent or another method that we approve. Your measurement procedure may incorporate multiple measurements. If the true concentration of the gas changes deviates by more than ±2%, but less than ±10%, the gas may be relabeled with the new concentration.

[79 FR 23812, Apr. 28, 2014, as amended at 79 FR 36658, June 30, 2014]

§ 1065.850 Calculations.

Use the calculations specified in §1065.665 to determine THCE or NMHCE and the calculations specified in 40 CFR 1066.635 to determine NMOG.

[79 FR 23813, Apr. 28, 2014]

Subpart J—Field Testing and Portable Emission Measurement Systems

§ 1065.901 Applicability.

(a) *Field testing.* This subpart specifies procedures for field-testing engines to determine brake-specific emissions using portable emission measurement systems (PEMS). These procedures are designed primarily for in-field measurements of engines that remain installed in vehicles or equipment in the field. Field-test procedures apply to your engines only as specified in the standard-setting part.

(b) *Laboratory testing.* You may use PEMS for any testing in a laboratory or similar environment without restriction or prior approval if the PEMS meets all applicable specifications for laboratory testing. You may also use PEMS for any testing in a laboratory or similar environment if we approve it in advance, subject to the following provisions:

(1) Follow the laboratory test procedures specified in this part 1065, according to §1065.905(e).

(2) Do not apply any PEMS-related field-testing adjustments or measurement allowances to laboratory emission results or standards.

(3) Do not use PEMS for laboratory measurements if it prevents you from demonstrating compliance with the applicable standards. Some of the PEMS requirements in this part 1065 are less stringent than the corresponding laboratory requirements. Depending on actual PEMS performance, you might

therefore need to account for some additional measurement uncertainty when using PEMS for laboratory testing. If we ask, you must show us by engineering analysis that any additional measurement uncertainty due to your use of PEMS for laboratory testing is offset by the extent to which your engine's emissions are below the applicable standards. For example, you might show that PEMS versus laboratory uncertainty represents 5% of the standard, but your engine's deteriorated emissions are at least 20% below the standard for each pollutant.

[70 FR 40516, July 13, 2005, as amended at 73 FR 37344, June 30, 2008]

§ 1065.905 General provisions.

(a) *General*. Unless the standard-setting part specifies deviations from the provisions of this subpart, field testing and laboratory testing with PEMS must conform to the provisions of this subpart. Use good engineering judgment when testing with PEMS to ensure proper function of the instruments under test conditions. For example, this may require additional maintenance or calibration for field testing or may require verification after moving the PEMS unit.

(b) *Field-testing scope*. Field testing conducted under this subpart may include any normal in-use operation of an engine.

(c) *Field testing and the standard-setting part*. This subpart J specifies procedures for field-testing various categories of engines. See the standard-setting part for specific provisions for a particular type of engine. Before using this subpart's procedures for field testing, read the standard-setting part to answer at least the following questions:

(1) How many engines must I test in the field?

(2) How many times must I repeat a field test on an individual engine?

(3) How do I select vehicles for field testing?

(4) What maintenance steps may I take before or between tests?

(5) What data are needed for a single field test on an individual engine?

(6) What are the limits on ambient conditions for field testing? Note that the ambient condition limits in § 1065.520 do not apply for field testing. Field testing may occur at any ambient temperature, pressure, and humidity unless otherwise specified in the standard-setting part.

(7) Which exhaust constituents do I need to measure?

(8) How do I account for crankcase emissions?

(9) Which engine and ambient parameters do I need to measure?

(10) How do I process the data recorded during field testing to determine if my engine meets field-testing standards? How do I determine individual test intervals? Note that ''test interval'' is defined in subpart K of this part 1065.

(11) Should I warm up the test engine before measuring emissions, or do I need to measure cold-start emissions during a warm-up segment of in-use operation?

(12) Do any unique specifications apply for test fuels?

(13) Do any special conditions invalidate parts of a field test or all of a field test?

(14) Does any special measurement allowance apply to field-test emission results or standards, based on using PEMS for field-testing versus using laboratory equipment and instruments for laboratory testing?

(15) Do results of initial field testing trigger any requirement for additional field testing or laboratory testing?

(16) How do I report field-testing results?

(d) *Field testing and this part 1065*. Use the following specifications for field testing:

(1) Use the applicability and general provisions of subpart A of this part.

(2) Use equipment specifications in § 1065.101 and in the sections from § 1065.140 to the end of subpart B of this part, with the exception of §§ 1065.140(e)(1) and (4), 1065.170(c)(1)(vi), and 1065.195(c). Section 1065.910 identifies additional equipment that is specific to field testing.

(i) For PM samples, configure dilution systems as follows:

(A) Use good engineering judgment to control dilution air temperature. If you choose to directly and actively control dilution air temperature, set the temperature to 25 °C.

(B) Control sample temperature to a (32 to 62) °C tolerance, as measured anywhere within 20 cm upstream or downstream of the PM storage media (such as a filter or oscillating crystal), where the tolerance applies only during sampling.

(C) Maintain filter face velocity to a (5 to 100) cm/s tolerance for flow-through media. Compliance with this provision can be verified by engineering analysis. This provision does not apply for non-flow-through media.

(ii) For inertial PM balances, there is no requirement to control the stabilization environment temperature or dewpoint.

(3) Use measurement instruments in subpart C of this part, except as specified in § 1065.915.

(4) Use calibrations and verifications in subpart D of this part, except as specified in § 1065.920. Section 1065.920 also specifies additional calibrations and verifications for field testing.

(5) Use the provisions of the standard-setting part for selecting and maintaining engines in the field instead of the specifications in subpart E of this part.

(6) Use the procedures in §§ 1065.930 and 1065.935 to start and run a field test. If you use a gravimetric balance for PM, weigh PM samples according to §§ 1065.590 and 1065.595.

(7) Use the calculations in subpart G of this part to calculate emissions over each test interval. Note that ''test interval'' is defined in subpart K of this part 1065, and that the standard setting part indicates how to determine test intervals for your engine.

Section 1065.940 specifies additional calculations for field testing. Use any calculations specified in the standard-setting part to determine if your engines meet the field-testing standards. The standard-setting part may also contain additional calculations that determine when further field testing is required.

(8) Use a typical in-use fuel meeting the specifications of § 1065.701(d).

(9) Use the lubricant and coolant specifications in §§ 1065.740 and 1065.745.

(10) Use the analytical gases and other calibration standards in § 1065.750 and § 1065.790.

(11) If you are testing with oxygenated fuels, use the procedures specified for testing with oxygenated fuels in subpart I of this part.

(12) Apply the definitions and reference materials in subpart K of this part.

(e) *Laboratory testing using PEMS.* You may use PEMS for testing in a laboratory as described in § 1065.901(b). Use the following procedures and specifications when using PEMS for laboratory testing:

(1) Use the applicability and general provisions of subpart A of this part.

(2) Use equipment specifications in subpart B of this part. Section 1065.910 specifies additional equipment specific to testing with PEMS.

(3) Use measurement instruments in subpart C of this part, except as specified in § 1065.915.

(4) Use calibrations and verifications in subpart D of this part, except as specified in § 1065.920. Section 1065.920 also specifies additional calibration and verifications for PEMS.

(5) Use the provisions of § 1065.401 for selecting engines for testing. Use the provisions of subpart E of this part for maintaining engines, except as specified in the standard-setting part.

(6) Use the procedures in subpart F of this part and in the standard-setting part to start and run a laboratory test.

(7) Use the calculations in subpart G of this part to calculate emissions over the applicable duty cycle. Section 1065.940 specifies additional calculations for testing with PEMS.

(8) Use a fuel meeting the specifications of subpart H of this part, as specified in the standard-setting part.

(9) Use the lubricant and coolant specifications in §§ 1065.740 and 1065.745.

(10) Use the analytical gases and other calibration standards in §§ 1065.750 and 1065.790.

(11) If you are testing with oxygenated fuels, use the procedures specified for testing with oxygenated fuels in subpart I of this part.

(12) Apply the definitions and reference materials in subpart K of this part.

(f) *Summary*. The following table summarizes the requirements of paragraphs (d) and (e) of this section:

TABLE 1 OF § 1065.905—SUMMARY OF TESTING REQUIREMENTS SPECIFIED OUTSIDE OF THIS SUBPART J

Subpart	Applicability for field testing [1]	Applicability for laboratory or similar testing with PEMS without restriction [1]	Applicability for laboratory or similar testing with PEMS with restrictions [1]
A: Applicability and general provisions.	Use all	Use all	Use all.
B: Equipment for testing	Use § 1065.101 and § 1065.140 through the end of subpart B, except § 1065.140(e)(1) and (4), § 1065.170(c)(1)(vi), and § 1065.195(c). § 1065.910 specifies equipment specific to field testing.	Use all	Use all. § 1065.910 specifies equipment specific to laboratory testing with PEMS.
C: Measurement instruments.	Use all. § 1065.915 allows deviations	Use all except § 1065.295(c).	Use all except § 1065.295(c). § 1065.915 allows deviations.
D: Calibrations and verifications.	Use all except § 1065.308 and § 1065.309. § 1065.920 allows deviations, but also has additional specifications.	Use all	Use all. § 1065.920 allows deviations, but also has additional specifications.
E: Test engine selection, maintenance, and durability.	Do not use. Use standard-setting part	Use all	Use all.
F: Running an emission test in the laboratory.	Use §§ 1065.590 and 1065.595 for PM § 1065.930 and § 1065.935 to start and run a field test.	Use all	Use all.
G: Calculations and data requirements.	Use all. § 1065.940 has additional calculation instructions.	Use all	Use all. § 1065.940 has additional calculation instructions.
H: Fuels, engine fluids, analytical gases, and other calibration materials.	Use all	Use all	Use all.
I: Testing with oxygenated fuels.	Use all	Use all	Use all.
K: Definitions and reference materials.	Use all	Use all	Use all.

[1] Refer to paragraphs (d) and (e) of this section for complete specifications.

[70 FR 40516, July 13, 2005, as amended at 73 FR 37344, June 30, 2008; 75 FR 68465, Nov. 8, 2010; 79 FR 23813, Apr. 28, 2014]

EFFECTIVE DATE NOTE: At 86 FR 34574, June 29, 2021, § 1065.905 was amended, effective July 29, 2021.

§ 1065.910 PEMS auxiliary equipment for field testing.

For field testing you may use various types of auxiliary equipment to attach PEMS to a vehicle or engine and to power PEMS.

(a) When you use PEMS, you may route engine intake air or exhaust through a flow meter. Route the engine intake air or exhaust as follows:

(1) *Flexible connections.* Use short flexible connectors where necessary.

(i) You may use flexible connectors to enlarge or reduce the pipe diameters to match that of your test equipment.

(ii) We recommend that you use flexible connectors that do not exceed a length of three times their largest inside diameter.

(iii) We recommend that you use four-ply silicone-fiberglass fabric with a temperature rating of at least 315 °C for flexible connectors. You may use connectors with a spring-steel wire helix for support and you may use Nomex™ coverings or linings for durability. You may also use any other nonreactive material with equivalent permeation-resistance and durability, as long as it seals tightly.

(iv) Use stainless-steel hose clamps to seal flexible connectors, or use clamps that seal equivalently.

(v) You may use additional flexible connectors to connect to flow meters.

(2) *Tubing.* Use rigid 300 series stainless steel tubing to connect between flexible connectors. Tubing may be

straight or bent to accommodate vehicle geometry. You may use ''T'' or ''Y'' fittings made of 300 series stainless steel tubing to join multiple connections, or you may cap or plug redundant flow paths if the engine manufacturer recommends it.

(3) *Flow restriction*. Use flow meters, connectors, and tubing that do not increase flow restriction so much that it exceeds the manufacturer's maximum specified value. You may verify this at the maximum exhaust flow rate by measuring pressure at the manufacturer-specified location with your system connected. You may also perform an engineering analysis to verify an acceptable configuration, taking into account the maximum exhaust flow rate expected, the field test system's flexible connectors, and the tubing's characteristics for pressure drops versus flow.

(b) For vehicles or other motive equipment, we recommend installing PEMS in the same location where a passenger might sit. Follow PEMS manufacturer instructions for installing PEMS in cargo spaces, engine spaces, or externally such that PEMS is directly exposed to the outside environment. We recommend locating PEMS where it will be subject to minimal sources of the following parameters:

(1) Ambient temperature changes.

(2) Ambient pressure changes.

(3) Electromagnetic radiation.

(4) Mechanical shock and vibration.

(5) Ambient hydrocarbons—if using a FID analyzer that uses ambient air as FID burner air.

(c) Use mounting hardware as required for securing flexible connectors, ambient sensors, and other equipment. Use structurally sound mounting points such as vehicle frames, trailer hitch receivers, walk spaces, and payload tie-down fittings. We recommend mounting hardware such as clamps, suction cups, and magnets that are specifically designed for your application. We also recommend considering mounting hardware such as commercially available bicycle racks, trailer hitches, and luggage racks where applicable.

(d) Field testing may require portable electrical power to run your test equipment. Power your equipment, as follows:

(1) You may use electrical power from the vehicle, equipment, or vessel, up to the highest power level, such that all the following are true:

(i) The power system is capable of safely supplying power, such that the power demand for testing does not overload the power system.

(ii) The engine emissions do not change significantly as a result of the power demand for testing.

(iii) The power demand for testing does not increase output from the engine by more than 1% of its maximum power.

(2) You may install your own portable power supply. For example, you may use batteries, fuel cells, a portable generator, or any other power supply to supplement or replace your use of vehicle power. You may connect an external power source directly to the vehicle's, vessel's, or equipment's power system; however, during a test interval (such as an NTE event) you must not supply power to the vehicle's power system in excess of 1% of the engine's maximum power.

[73 FR 37344, June 30, 2008, as amended at 75 FR 23058, Apr. 30, 2010]

EFFECTIVE DATE NOTE: At 86 FR 34575, June 29, 2021, § 1065.910 was amended, effective July 29, 2021.

§ 1065.915 PEMS instruments.

(a) *Instrument specifications*. We recommend that you use PEMS that meet the specifications of subpart C of this part. For unrestricted use of PEMS in a laboratory or similar environment, use a PEMS that meets the same specifications as each lab instrument it replaces. For field testing or for testing with PEMS in a laboratory or similar environment, under the provisions of § 1065.905(b), the specifications in the following table apply instead of the specifications in Table 1 of § 1065.205.

TABLE 1 OF § 1065.915—RECOMMENDED MINIMUM PEMS MEASUREMENT INSTRUMENT PERFORMANCE

Measurement	Measured quantity symbol	Rise time, t_{10-90}, and fall time, t_{90-10}	Recording update frequency	Accuracy [1]	Repeatability [1]	Noise [1]
Engine speed transducer	f_n	1 s	1 Hz means	5% of pt. or 1% of max.	2% of pt. or 1% of max.	0.5% of max.
Engine torque estimator, BSFC (This is a signal from an engine's ECM).	T or BSFC	1 s	1 Hz means	8% of pt. or 5% of max.	2% of pt. or 1% of max.	1% of max.
General pressure transducer (not a part of another instrument).	p	5 s	1 Hz	5% of pt. or 5% of max.	2% of pt. or 0.5% of max.	1% of max.
Atmospheric pressure meter	p_{atmos}	50 s	0.1 Hz	250 Pa	200 Pa	100 Pa.
General temperature sensor (not a part of another instrument).	T	5 s	1 Hz	1% of pt. K or 5 K.	0.5% of pt. K or 2 K.	0.5% of max 0.5 K.
General dewpoint sensor	T_{dew}	50 s	0.1 Hz	3 K	1 K	1 K.
Exhaust flow meter	$\dot{n}$	1 s	1 Hz means	5% of pt. or 3% of max.	2% of pt	2% of max.
Dilution air, inlet air, exhaust, and sample flow meters.	$\dot{n}$	1 s	1 Hz means	2.5% of pt. or 1.5% of max.	1.25% of pt. or 0.75% of max.	1% of max.
Continuous gas analyzer	x	5 s	1 Hz	4% of pt. or 4% of meas.	2% of pt. or 2% of meas.	1% of max.
Gravimetric PM balance	m_{PM}			See § 1065.790.	0.5 µg.	
Inertial PM balance	m_{PM}			4% of pt. or 4% of meas.	2% of pt. or 2% of meas.	1% of max.

[1] Accuracy, repeatability, and noise are all determined with the same collected data, as described in § 1065.305, and based on absolute values. ''pt.'' refers to the overall flow-weighted mean value expected at the standard; ''max.'' refers to the peak value expected at the standard over any test interval, not the maximum of the instrument's range; ''meas'' refers to the actual flow-weighted mean measured over any test interval.

(b) *Redundant measurements.* For all PEMS described in this subpart, you may use data from multiple instruments to calculate test results for a single test. If you use redundant systems, use good engineering judgment to use multiple measured values in calculations or to disregard individual measurements. Note that you must keep your results from all measurements, as described in § 1065.25. This requirement applies whether or not you actually use the measurements in your calculations.

(c) *Field-testing ambient effects on PEMS.* We recommend that you use PEMS that are only minimally affected by ambient conditions such as temperature, pressure, humidity, physical orientation, mechanical shock and vibration, electromagnetic radiation, and ambient hydrocarbons. Follow the PEMS manufacturer's instructions for proper installation to isolate PEMS from ambient conditions that affect their performance. If a PEMS is inherently affected by ambient conditions that you cannot control, you may monitor those conditions and adjust the PEMS signals to compensate for the ambient effect. The standard-setting part may also specify the use of one or more field-testing adjustments or measurement allowances that you apply to results or standards to account for ambient effects on PEMS.

(d) *ECM signals.* You may use signals from the engine's electronic control module (ECM) in place of values measured by individual instruments within a PEMS, subject to the following provisions:

(1) *Recording ECM signals.* If your ECM updates a broadcast signal more or less frequently than 1 Hz, process data as follows:

(i) If your ECM updates a broadcast signal more frequently than 1 Hz, use PEMS to sample and record the signal's value more frequently. Calculate and record the 1 Hz mean of the more frequently updated data.

(ii) If your ECM updates a broadcast signal less frequently than 1 Hz, use

PEMS to sample and record the signal's value at the most frequent rate. Linearly interpolate between recorded values and record the interpolated values at 1 Hz.

(iii) Optionally, you may use PEMS to electronically filter the ECM signals to meet the rise time and fall time specifications in Table 1 of this section. Record the filtered signal at 1 Hz.

(2) *Omitting ECM signals.* Replace any discontinuous or irrational ECM data with linearly interpolated values from adjacent data.

(3) *Aligning ECM signals with other data.* You must perform time-alignment and dispersion of ECM signals, according to PEMS manufacturer instructions and using good engineering judgment.

(4) *ECM signals for determining test intervals.* You may use any combination of ECM signals, with or without other measurements, to determine the start-time and end-time of a test interval.

(5) *ECM signals for determining brake-specific emissions.* You may use any combination of ECM signals, with or without other measurements, to estimate engine speed, torque, brake-specific fuel consumption (BSFC, in units of mass of fuel per kW-hr), and fuel rate for use in brake-specific emission calculations. We recommend that the overall performance of any speed, torque, or BSFC estimator should meet the performance specifications in Table 1 of this section. We recommend using one of the following methods:

(i) *Speed.* Use the engine speed signal directly from the ECM. This signal is generally accurate and precise. You may develop your own speed algorithm based on other ECM signals.

(ii) *Torque.* Use one of the following:

(A) *ECM torque.* Use the engine-torque signal directly from the ECM, if broadcast. Determine if this signal is proportional to indicated torque or brake torque. If it is proportional to indicated torque, subtract friction torque from indicated torque and record the result as brake torque. Friction torque may be a separate signal broadcast from the ECM or you may have to determine it from laboratory data as a function of engine speed.

(B) *ECM %-load.* Use the %-load signal directly from the ECM, if broadcast. Determine if this signal is proportional to indicated torque or brake torque. If it is proportional to indicated torque, subtract the minimum %-load value from the %-load signal. Multiply this result by the maximum brake torque at the corresponding engine speed. Maximum brake torque versus speed information is commonly published by the engine manufacturer.

(C) *Your algorithms.* You may develop and use your own combination of ECM signals to determine torque.

(iii) *BSFC.* Use one of the following:

(A) Use ECM engine speed and ECM fuel flow signals to interpolate brake-specific fuel consumption data, which might be available from an engine laboratory as a function of ECM engine speed and ECM fuel signals.

(B) Use a single BSFC value that approximates the BSFC value over a test interval (as defined in subpart K of this part). This value may be a nominal BSFC value for all engine operation determined over one or more laboratory duty cycles, or it may be any other BSFC that you determine. If you use a nominal BSFC, we recommend that you select a value based on the BSFC measured over laboratory duty cycles that best represent the range of engine operation that defines a test interval for field-testing. You may use the methods of this paragraph (d)(5)(iii)(B) only if it does not adversely affect your ability to demonstrate compliance with applicable standards.

(C) You may develop and use your own combination of ECM signals to determine BSFC.

(iv) *ECM fuel rate.* Use the fuel rate signal directly from the ECM and chemical balance to determine the molar flow rate of exhaust. Use §1065.655(d) to determine the carbon mass fraction of fuel. You may alternatively develop and use your own combination of ECM signals to determine fuel mass flow rate.

(v) *Other ECM signals.* You may ask to use other ECM signals for determining brake-specific emissions, such as ECM air flow. We must approve the use of such signals in advance.

(6) *Permissible deviations.* ECM signals may deviate from the specifications of

this part 1065, but the expected deviation must not prevent you from demonstrating that you meet the applicable standards. For example, your emission results may be sufficiently below an applicable standard, such that the deviation would not significantly change the result. As another example, a very low engine-coolant temperature may define a logical statement that determines when a test interval may start. In this case, even if the ECM's sensor for detecting coolant temperature was not very accurate or repeatable, its output would never deviate so far as to significantly affect when a test interval may start.

[70 FR 40516, July 13, 2005, as amended at 73 FR 37344, June 30, 2008; 73 FR 59342, Oct. 8, 2008; 75 FR 68466, Nov. 8, 2010; 76 FR 57467, Sept. 15, 2011; 79 FR 23813, Apr. 28, 2014]

EFFECTIVE DATE NOTE: At 86 FR 34575, June 29, 2021, § 1065.915 was amended, effective July 29, 2021.

§ 1065.920 PEMS calibrations and verifications.

(a) *Subsystem calibrations and verifications.* Use all the applicable calibrations and verifications in subpart D of this part, including the linearity verifications in § 1065.307, to calibrate and verify PEMS. Note that a PEMS does not have to meet the system-response and updating-recording verifications of § 1065.308 and § 1065.309 if it meets the overall verification described in paragraph (b) of this section or if it measures PM using any method other than that described in § 1065.170(c)(1). This section does not apply to ECM signals. Note that because the regulations of this part require you to use good engineering judgment, it may be necessary to perform additional verifications and analysis. It may also be necessary to limit the range of conditions under which the PEMS can be used or to include specific additional maintenance to ensure that it functions properly under the test conditions. As provided in 40 CFR 1068.5, we will deem your system to not meet the requirements of this section if we determine that you did not use good engineering judgment to verify the measurement equipment. We may also deem your system to meet these requirements only under certain test conditions. If we ask for it, you must send us a summary of your verifications. We may also ask you to provide additional information or analysis to support your conclusions.

(b) *Overall verification.* This paragraph (b) specifies methods and criteria for verifying the overall performance of systems not fully compliant with requirements that apply for laboratory testing. Maintain records to show that the particular make, model, and configuration of your PEMS meets this verification. You may rely on data and other information from the PEMS manufacturer. However, we recommend that you generate your own records to show that your specific PEMS meets this verification. If you upgrade or change the configuration of your PEMS, your record must show that your new configuration meets this verification. The verification required by this section consists of operating an engine over a duty cycle in the laboratory and statistically comparing data generated and recorded by the PEMS with data simultaneously generated and recorded by laboratory equipment as follows:

(1) Mount an engine on a dynamometer for laboratory testing. Prepare the laboratory and PEMS for emission testing, as described in this part, to get simultaneous measurements. We recommend selecting an engine with emission levels close to the applicable duty-cycle standards, if possible.

(2) Select or create a duty cycle that has all the following characteristics:

(i) Engine operation that represents normal in-use speeds, loads, and degree of transient activity. Consider using data from previous field tests to generate a cycle.

(ii) A duration of (20 to 40) min.

(iii) At least 50% of engine operating time must include at least 10 valid test intervals for calculating emission levels for field testing. For example, for highway compression-ignition engines, select a duty cycle in which at least 50% of the engine operating time can be used to calculate valid NTE events.

(3) Starting with a warmed-up engine, run a valid emission test with the duty cycle from paragraph (b)(2) of this section. The laboratory and PEMS must both meet applicable validation

requirements, such as drift validation, hydrocarbon contamination validation, and proportional validation.

(4) Determine the brake-specific emissions for each test interval for both laboratory and the PEMS measurements, as follows:

(i) For both laboratory and PEMS measurements, use identical values to determine the beginning and end of each test interval.

(ii) For both laboratory and PEMS measurements, use identical values to determine total work over each test interval.

(iii) If the standard-setting part specifies the use of a measurement allowance for field testing, also apply the measurement allowance during calibration using good engineering judgment. If the measurement allowance is normally added to the standard, this means you must subtract the measurement allowance from the measured PEMS brake-specific emission result.

(iv) Round results to the same number of significant digits as the standard.

(5) Repeat the engine duty cycle and calculations until you have at least 100 valid test intervals.

(6) For each test interval and emission, subtract the lab result from the PEMS result.

(7) The PEMS passes the verification of this paragraph (b) if any one of the following are true for each constituent:

(i) 91% or more of the differences are zero or less than zero.

(ii) The entire set of test-interval results passes the 95% confidence alternate-procedure statistics for field testing (*t*-test and *F*-test) specified in subpart A of this part.

[70 FR 40516, July 13, 2005, as amended at 73 FR 37345, June 30, 2008; 75 FR 68467, Nov. 8, 2010; 79 FR 23814, Apr. 28, 2014]

§ 1065.925 PEMS preparation for field testing.

Take the following steps to prepare PEMS for field testing:

(a) Verify that ambient conditions at the start of the test are within the limits specified in the standard-setting part. Continue to monitor these values to determine if ambient conditions exceed the limits during the test.

(b) Install a PEMS and any accessories needed to conduct a field test.

(c) Power the PEMS and allow pressures, temperatures, and flows to stabilize to their operating set points.

(d) Bypass or purge any gaseous sampling PEMS instruments with ambient air until sampling begins to prevent system contamination from excessive cold-start emissions.

(e) Conduct calibrations and verifications.

(f) Operate any PEMS dilution systems at their expected flow rates using a bypass.

(g) If you use a gravimetric balance to determine whether an engine meets an applicable PM standard, follow the procedures for PM sample preconditioning and tare weighing as described in § 1065.590. Operate the PM-sampling system at its expected flow rates using a bypass.

(h) Verify the amount of contamination in the PEMS HC sampling system before the start of the field test as follows:

(1) Select the HC analyzer range for measuring the maximum concentration expected at the HC standard.

(2) Zero the HC analyzers using a zero gas or ambient air introduced at the analyzer port. When zeroing a FID, use the FID's burner air that would be used for in-use measurements (generally either ambient air or a portable source of burner air).

(3) Span the HC analyzer using span gas introduced at the analyzer port.

(4) Overflow zero or ambient air at the HC probe inlet or into a tee near the probe outlet.

(5) Measure the HC concentration in the sampling system:

(i) For continuous sampling, record the mean HC concentration as overflow zero air flows.

(ii) For batch sampling, fill the sample medium and record its mean concentration.

(6) Record this value as the initial HC concentration, x_{THCinit}, and use it to correct measured values as described in § 1065.660.

(7) If the initial HC concentration exceeds the greater of the following values, determine the source of the contamination and take corrective action,

such as purging the system or replacing contaminated portions:

(i) 2% of the flow-weighted mean concentration expected at the standard or measured during testing.

(ii) 2 μmol/mol.

(8) If corrective action does not resolve the deficiency, you may use a contaminated HC system if it does not prevent you from demonstrating compliance with the applicable emission standards.

[70 FR 40516, July 13, 2005, as amended at 73 FR 37345, June 30, 2008; 73 FR 59342, Oct. 8, 2008; 75 FR 68467, Nov. 8, 2010; 76 FR 57467, Sept. 15, 2011]

§ 1065.930 Engine starting, restarting, and shutdown.

Unless the standard-setting part specifies otherwise, start, restart, and shut down the test engine for field testing as follows:

(a) Start or restart the engine as described in the owners manual.

(b) If the engine does not start after 15 seconds of cranking, stop cranking and determine the reason it failed to start. However, you may crank the engine longer than 15 seconds, as long as the owners manual or the service-repair manual describes the longer cranking time as normal.

(c) Respond to engine stalling with the following steps:

(1) If the engine stalls during a required warm-up before emission sampling begins, restart the engine and continue warm-up.

(2) If the engine stalls at any other time after emission sampling begins, restart the engine and continue testing.

(d) Shut down and restart the engine according to the manufacturer's specifications, as needed during normal operation in-use, but continue emission sampling until the field test is complete.

§ 1065.935 Emission test sequence for field testing.

(a) Time the start of field testing as follows:

(1) If the standard-setting part requires only hot-stabilized emission measurements, operate the engine in-use until the engine coolant, block, or head absolute temperature is within ±10% of its mean value for the previous 2 min or until an engine thermostat controls engine temperature with coolant or air flow.

(2) If the standard-setting part requires hot-start emission measurements, shut down the engine after at least 2 min at the temperature tolerance specified in paragraph (a)(1) of this section. Start the field test within 20 min of engine shutdown.

(3) If the standard-setting part requires cold-start emission measurements, proceed to the steps specified in paragraph (b) of this section.

(b) Take the following steps before emission sampling begins:

(1) For batch sampling, connect clean storage media, such as evacuated bags or tare-weighed PM sample media.

(2) Operate the PEMS according to the instrument manufacturer's instructions and using good engineering judgment.

(3) Operate PEMS heaters, dilution systems, sample pumps, cooling fans, and the data-collection system.

(4) Pre-heat or pre-cool PEMS heat exchangers in the sampling system to within their tolerances for operating temperatures.

(5) Allow all other PEMS components such as sample lines, filters, and pumps to stabilize at operating temperature.

(6) Verify that no significant vacuum-side leak exists in the PEMS, as described in § 1065.345.

(7) Adjust PEMS flow rates to desired levels, using bypass flow if applicable.

(8) Zero and span all PEMS gas analyzers using NIST-traceable gases that meet the specifications of § 1065.750.

(c) Start testing as follows:

(1) Before the start of the first test interval, zero or re-zero any PEMS electronic integrating devices, as needed.

(2) If the engine is already running and warmed up and starting is not part of field testing, start the field test by simultaneously starting to sample exhaust, record engine and ambient data, and integrate measured values using a PEMS.

(3) If engine starting is part of field testing, start field testing by simultaneously starting to sample from the exhaust system, record engine and ambient data, and integrate measured values using a PEMS. Then start the engine.

(d) Continue the test as follows:

(1) Continue to sample exhaust, record data and integrate measured values throughout normal in-use operation of the engine.

(2) Between each test interval, zero or re-zero any electronic integrating devices, and reset batch storage media, as needed.

(3) The engine may be stopped and started, but continue to sample emissions throughout the entire field test.

(4) Conduct periodic verifications such as zero and span verifications on PEMS gas analyzers, as recommended by the PEMS manufacturer or as indicated by good engineering judgment. Results from these verifications will be used to calculate and correct for drift according to paragraph (g) of this section. Do not include data recorded during verifications in emission calculations.

(5) You may periodically condition and analyze batch samples in-situ, including PM samples; for example you may condition an inertial PM balance substrate if you use an inertial balance to measure PM.

(6) You may have personnel monitoring and adjusting the PEMS during a test, or you may operate the PEMS unattended.

(e) Stop testing as follows:

(1) Continue sampling as needed to get an appropriate amount of emission measurement, according to the standard setting part. If the standard-setting part does not describe when to stop sampling, develop a written protocol before you start testing to establish how you will stop sampling. You may not determine when to stop testing based on emission results.

(2) At the end of the field test, allow the sampling systems' response times to elapse and then stop sampling. Stop any integrators and indicate the end of the test cycle on the data-collection medium.

(3) You may shut down the engine before or after you stop sampling.

(f) For any proportional batch sample, such as a bag sample or PM sample, verify for each test interval whether or not proportional sampling was maintained according to §1065.545. Void the sample for any test interval that did not maintain proportional sampling according to §1065.545.

(g) Take the following steps after emission sampling is complete:

(1) As soon as practical after the emission sampling, analyze any gaseous batch samples.

(2) If you used dilution air, either analyze background samples or assume that background emissions were zero. Refer to §1065.140 for dilution-air specifications.

(3) After quantifying all exhaust gases, record mean analyzer values after stabilizing a zero gas to each analyzer, then record mean analyzer values after stabilizing the span gas to the analyzer. Stabilization may include time to purge an analyzer of any sample gas, plus any additional time to account for analyzer response. Use these recorded values to correct for drift as described in §1065.550.

(4) Invalidate any test intervals that do not meet the range criteria in §1065.550. Note that it is acceptable that analyzers exceed 100% of their ranges when measuring emissions between test intervals, but not during test intervals. You do not have to retest an engine in the field if the range criteria are not met.

(5) Invalidate any test intervals that do not meet the drift criterion in §1065.550. For NMHC, invalidate any test intervals if the difference between the uncorrected and the corrected brake-specific NMHC emission values are within ±10% of the uncorrected results or the applicable standard, whichever is greater. For test intervals that do meet the drift criterion, correct those test intervals for drift according to §1065.672 and use the drift corrected results in emissions calculations.

(6) Unless you weighed PM in-situ, such as by using an inertial PM balance, place any used PM samples into covered or sealed containers and return

them to the PM-stabilization environment and weigh them as described in § 1065.595.

[70 FR 40516, July 13, 2005, as amended at 73 FR 37345, June 30, 2008]

§ 1065.940 Emission calculations.

(a) Perform emission calculations as described in § 1065.650 to calculate brake-specific emissions for each test interval using any applicable information and instructions in the standard-setting part.

(b) You may use a fixed molar mass for the diluted exhaust mixture for field testing. Determine this fixed value by engineering analysis.

[75 FR 68467, Nov. 8, 2010]

Subpart K—Definitions and Other Reference Information

§ 1065.1001 Definitions.

The definitions in this section apply to this part. The definitions apply to all subparts unless we note otherwise. All undefined terms have the meaning the Act gives them. The definitions follow:

300 series stainless steel means any stainless steel alloy with a Unified Numbering System for Metals and Alloys number designated from S30100 to S39000. For all instances in this part where we specify 300 series stainless steel, such parts must also have a smooth inner-wall construction. We recommend an average roughness, R_a, no greater than 4 μm.

Accuracy means the absolute difference between a reference quantity and the arithmetic mean of ten mean measurements of that quantity. Determine instrument accuracy, repeatability, and noise from the same data set. We specify a procedure for determining accuracy in § 1065.305.

Act means the Clean Air Act, as amended, 42 U.S.C. 7401–7671q.

Adjustable parameter means any device, system, or element of design that someone can adjust (including those which are difficult to access) and that, if adjusted, may affect emissions or engine performance during emission testing or normal in-use operation. This includes, but is not limited to, parameters related to injection timing and fueling rate. In some cases, this may exclude a parameter that is difficult to access if it cannot be adjusted to affect emissions without significantly degrading engine performance, or if it will not be adjusted in a way that affects emissions during in-use operation.

Aerodynamic diameter means the diameter of a spherical water droplet that settles at the same constant velocity as the particle being sampled.

Aftertreatment means relating to a catalytic converter, particulate filter, or any other system, component, or technology mounted downstream of the exhaust valve (or exhaust port) whose design function is to decrease emissions in the engine exhaust before it is exhausted to the environment. Exhaust-gas recirculation (EGR) and turbochargers are not aftertreatment.

Allowed procedures means procedures that we either specify in this part 1065 or in the standard-setting part or approve under § 1065.10.

Alternate procedures means procedures allowed under § 1065.10(c)(7).

Applicable standard means an emission standard to which an engine is subject; or a family emission limit to which an engine is certified under an emission credit program in the standard-setting part.

Aqueous condensation means the precipitation of water-containing constituents from a gas phase to a liquid phase. Aqueous condensation is a function of humidity, pressure, temperature, and concentrations of other constituents such as sulfuric acid. These parameters vary as a function of engine intake-air humidity, dilution-air humidity, engine air-to-fuel ratio, and fuel composition—including the amount of hydrogen and sulfur in the fuel.

Atmospheric pressure means the wet, absolute, atmospheric static pressure. Note that if you measure atmospheric pressure in a duct, you must ensure that there are negligible pressure losses between the atmosphere and your measurement location, and you must account for changes in the duct's static pressure resulting from the flow.

Auto-ranging means a gas analyzer function that automatically changes the analyzer digital resolution to a

larger range of concentrations as the concentration approaches 100% of the analyzer's current range. Auto-ranging does not mean changing an analog amplifier gain within an analyzer.

Auxiliary emission-control device means any element of design that senses temperature, motive speed, engine RPM, transmission gear, or any other parameter for the purpose of activating, modulating, delaying, or deactivating the operation of any part of the emission-control system.

Average means the arithmetic mean of a sample.

Brake power has the meaning given in the standard-setting part. If it is not defined in the standard-setting part, brake power means the usable power output of the engine, not including power required to fuel, lubricate, or heat the engine, circulate coolant to the engine, or to operate aftertreatment devices. If the engine does not power these accessories during a test, subtract the work required to perform these functions from the total work used in brake-specific emission calculations. Subtract engine fan work from total work only for air-cooled engines.

C_1-equivalent means a convention of expressing HC concentrations based on the total number of carbon atoms present, such that the C_1-equivalent of a molar HC concentration equals the molar concentration multiplied by the mean number of carbon atoms in each HC molecule. For example, the C_1-equivalent of 10 μmol/mol of propane (C_3H_8) is 30 μmol/mol. C_1-equivalent molar values may be denoted as ''ppmC'' in the standard-setting part. Molar mass may also be expressed on a C_1 basis. Note that calculating HC masses from molar concentrations and molar masses is only valid where they are each expressed on the same carbon basis.

Calibration means the process of setting a measurement system's response so that its output agrees with a range of reference signals. Contrast with ''verification''.

Calibration gas means a purified gas mixture used to calibrate gas analyzers. Calibration gases must meet the specifications of §1065.750. Note that calibration gases and span gases are qualitatively the same, but differ in terms of their primary function. Various performance verification checks for gas analyzers and sample handling components might refer to either calibration gases or span gases.

Certification means relating to the process of obtaining a certificate of conformity for an engine family that complies with the emission standards and requirements in the standard-setting part.

Compression-ignition means relating to a type of reciprocating, internal-combustion engine that is not a spark-ignition engine.

Confidence interval means the range associated with a probability that a quantity will be considered statistically equivalent to a reference quantity.

Constant-speed engine means an engine whose certification is limited to constant-speed operation. Engines whose constant-speed governor function is removed or disabled are no longer constant-speed engines.

Constant-speed operation means engine operation with a governor that automatically controls the operator demand to maintain engine speed, even under changing load. Governors do not always maintain speed exactly constant. Typically speed can decrease (0.1 to 10) % below the speed at zero load, such that the minimum speed occurs near the engine's point of maximum power. (Note: An engine with an adjustable governor setting may be considered to operate at constant speed, subject to our approval. For such engines, the governor setting is considered an adjustable parameter.)

Coriolis meter means a flow-measurement instrument that determines the mass flow of a fluid by sensing the vibration and twist of specially designed flow tubes as the flow passes through them. The twisting characteristic is called the Coriolis effect. According to Newton's Second Law of Motion, the amount of sensor tube twist is directly proportional to the mass flow rate of the fluid flowing through the tube. See §1065.220.

Designated Compliance Officer means the Director, Compliance and Innovative Strategies Division (6405–J), U.S. Environmental Protection Agency, 1200

Pennsylvania Ave., NW., Washington, DC 20460.

Dewpoint means a measure of humidity stated as the equilibrium temperature at which water condenses under a given pressure from moist air with a given absolute humidity. Dewpoint is specified as a temperature in °C or K, and is valid only for the pressure at which it is measured. See §1065.645 to determine water vapor mole fractions from dewpoints using the pressure at which the dewpoint is measured.

Diesel exhaust fluid (DEF) means a liquid reducing agent (other than the engine fuel) used in conjunction with selective catalytic reduction to reduce NO_X emissions. *Diesel exhaust fluid* is generally understood to be an aqueous solution of urea conforming to the specifications of ISO 18611 or ISO 22241.

Dilution ratio (DR) means the amount of diluted exhaust per amount of undiluted exhaust.

Discrete-mode means relating to a discrete-mode type of steady-state test, as described in the standard-setting part.

Dispersion means either:

(1) The broadening and lowering of a signal due to any fluid capacitance, fluid mixing, or electronic filtering in a sampling system. (Note: To adjust a signal so its dispersion matches that of another signal, you may adjust the system's fluid capacitance, fluid mixing, or electronic filtering.)

(2) The mixing of a fluid, especially as a result of fluid mechanical forces or chemical diffusion.

Drift means the difference between a zero or calibration signal and the respective value reported by a measurement instrument immediately after it was used in an emission test, as long as you zeroed and spanned the instrument just before the test.

Duty cycle means one of the following:

(1) A series of speed and torque values (or power values) that an engine must follow during a laboratory test. Duty cycles are specified in the standard-setting part. A single duty cycle may consist of one or more test intervals. A series of speed and torque values meeting the definition of this paragraph (1) may also be considered a test cycle. For example, a duty cycle may be a ramped-modal cycle, which has one test interval; a cold-start plus hot-start transient cycle, which has two test intervals; or a discrete-mode cycle, which has one test interval for each mode.

(2) A set of weighting factors and the corresponding speed and torque values, where the weighting factors are used to combine the results of multiple test intervals into a composite result.

Electric power generation application means an application whose purpose is to generate a precise frequency of electricity, which is characterized by an engine that controls engine speed very precisely. This would generally not apply to welders or portable home generators.

Electronic control module means an engine's electronic device that uses data from engine sensors to control engine parameters.

Emission-control system means any device, system, or element of design that controls or reduces the emissions of regulated pollutants from an engine.

Emission-data engine means an engine that is tested for certification. This includes engines tested to establish deterioration factors.

Emission-related maintenance means maintenance that substantially affects emissions or is likely to substantially affect emission deterioration.

Engine family means a group of engines with similar emission characteristics throughout the useful life, as specified in the standard-setting part.

Engine governed speed means the engine operating speed when it is controlled by the installed governor.

Exhaust-gas recirculation means a technology that reduces emissions by routing exhaust gases that had been exhausted from the combustion chamber(s) back into the engine to be mixed with incoming air before or during combustion. The use of valve timing to increase the amount of residual exhaust gas in the combustion chamber(s) that is mixed with incoming air before or during combustion is not considered exhaust-gas recirculation for the purposes of this part.

Fall time, t_{90-10}, means the time interval of a measurement instrument's response after any step decrease to the input between the following points:

(1) The point at which the response has fallen 10% of the total amount it will fall in response to the step change.

(2) The point at which the response has fallen 90% of the total amount it will fall in response to the step change.

Flow-weighted mean means the mean of a quantity after it is weighted proportional to a corresponding flow rate. For example, if a gas concentration is measured continuously from the raw exhaust of an engine, its flow-weighted mean concentration is the sum of the products of each recorded concentration times its respective exhaust flow rate, divided by the sum of the recorded flow rates. As another example, the bag concentration from a CVS system is the same as the flow-weighted mean concentration, because the CVS system itself flow-weights the bag concentration.

Fuel type means a general category of fuels such as gasoline or LPG. There can be multiple grades within a single type of fuel, such as all-season and winter-grade gasoline.

Good engineering judgment means judgments made consistent with generally accepted scientific and engineering principles and all available relevant information. See 40 CFR 1068.5 for the administrative process we use to evaluate good engineering judgment.

HEPA filter means high-efficiency particulate air filters that are rated to achieve a minimum initial particle-removal efficiency of 99.97% using ASTM F1471 (incorporated by reference in § 1065.1010).

High-idle speed means the engine speed at which an engine governor function controls engine speed with operator demand at maximum and with zero load applied. ''Warm high-idle speed'' is the high-idle speed of a warmed-up engine.

High-speed governor means any device, system, or element of design that modulates the engine output torque for the purpose of limiting the maximum engine speed.

Hydraulic diameter means the diameter of a circle whose area is equal to the area of a noncircular cross section of tubing, including its wall thickness. The wall thickness is included only for the purpose of facilitating a simplified and nonintrusive measurement.

Hydrocarbon (HC) means THC, THCE, NMHC, NMNEHC, NMOG, or NMHCE, as applicable. Hydrocarbon generally means the hydrocarbon group on which the emission standards are based for each type of fuel and engine.

Identification number means a unique specification (for example, a model number/serial number combination) that allows someone to distinguish a particular engine from other similar engines.

Idle speed means the engine speed at which an engine governor function controls engine speed with operator demand at minimum and with minimum load applied (greater than or equal to zero). For engines without a governor function that controls idle speed, idle speed means the manufacturer-declared value for lowest engine speed possible with minimum load. This definition does not apply for operation designated as ''high-idle speed.'' ''Warm idle speed'' is the idle speed of a warmed-up engine.

Intermediate test speed has the meaning given in § 1065.610.

Linearity means the degree to which measured values agree with respective reference values. Linearity is quantified using a linear regression of pairs of measured values and reference values over a range of values expected or observed during testing. Perfect linearity would result in an intercept, a_0, equal to zero, a slope, a_1, of one, a coefficient of determination, r^2, of one, and a standard error of the estimate, *SEE*, of zero. The term ''linearity'' is not used in this part to refer to the shape of a measurement instrument's unprocessed response curve, such as a curve relating emission concentration to voltage output. A properly performing instrument with a nonlinear response curve will meet linearity specifications.

Manufacturer has the meaning given in section 216(1) of the Act. In general, this term includes any person who manufactures an engine or vehicle for sale in the United States or otherwise introduces a new nonroad engine into commerce in the United States. This includes importers who import engines or vehicles for resale.

Maximum test speed has the meaning given in § 1065.610.

Maximum test torque has the meaning given in § 1065.610.

Measurement allowance means a specified adjustment in the applicable emission standard or a measured emission value to reflect the relative quality of the measurement. See the standard-setting part to determine whether any measurement allowances apply for your testing. Measurement allowances generally apply only for field testing and are intended to account for reduced accuracy or precision that result from using field-grade measurement systems.

Mode means one of the following:

(1) A distinct combination of engine speed and load for steady-state testing.

(2) A continuous combination of speeds and loads specifying a transition during a ramped-modal test.

(3) A distinct operator demand setting, such as would occur when testing locomotives or constant-speed engines.

NIST-accepted means relating to a value that has been assigned or named by NIST.

NIST-traceable means relating to a standard value that can be related to NIST-stated references through an unbroken chain of comparisons, all having stated uncertainties, as specified in NIST Technical Note 1297 (incorporated by reference in § 1065.1010). Allowable uncertainty limits specified for NIST-traceability refer to the propagated uncertainty specified by NIST. You may ask to use other internationally recognized standards that are equivalent to NIST standards.

Noise means the precision of 30 seconds of updated recorded values from a measurement instrument as it quantifies a zero or reference value. Determine instrument noise, repeatability, and accuracy from the same data set. We specify a procedure for determining noise in § 1065.305.

Nonmethane hydrocarbon equivalent (NMHCE) means the sum of the carbon mass contributions of non-oxygenated nonmethane hydrocarbons, alcohols and aldehydes, or other organic compounds that are measured separately as contained in a gas sample, expressed as exhaust nonmethane hydrocarbon from petroleum-fueled engines. The hydrogen-to-carbon ratio of the equivalent hydrocarbon is 1.85:1.

Nonmethane hydrocarbons (NMHC) means the sum of all hydrocarbon species except methane. Refer to § 1065.660 for NMHC determination.

Nonmethane nonethane hydrocarbon (NMNEHC) means the sum of all hydrocarbon species except methane and ethane. Refer to § 1065.660 for NMNEHC determination.

Nonroad means relating to nonroad engines.

Nonroad engine has the meaning we give in 40 CFR 1068.30. In general this means all internal-combustion engines except motor vehicle engines, stationary engines, engines used solely for competition, or engines used in aircraft.

Open crankcase emissions means any flow from an engine's crankcase that is emitted directly into the environment. Crankcase emissions are not ''open crankcase emissions'' if the engine is designed to always route all crankcase emissions back into the engine (for example, through the intake system or an aftertreatment system) such that all the crankcase emissions, or their products, are emitted into the environment only through the engine exhaust system.

Operator demand means an engine operator's input to control engine output. The ''operator'' may be a person (i.e., manual), or a governor (i.e., automatic) that mechanically or electronically signals an input that demands engine output. Input may be from an accelerator pedal or signal, a throttle-control lever or signal, a fuel lever or signal, a speed lever or signal, or a governor setpoint or signal. Output means engine power, P, which is the product of engine speed, f_n, and engine torque, T.

Oxides of nitrogen means NO and NO_2 as measured by the procedures specified in § 1065.270. Oxides of nitrogen are expressed quantitatively as if the NO is in the form of NO_2, such that you use an effective molar mass for all oxides of nitrogen equivalent to that of NO_2.

Oxygenated fuels means fuels composed of at least 25% oxygen-containing compounds, such as ethanol or methanol. Testing engines that use oxygenated fuels generally requires the

use of the sampling methods in subpart I of this part. However, you should read the standard-setting part and subpart I of this part to determine appropriate sampling methods.

Partial pressure means the pressure, p, attributable to a single gas in a gas mixture. For an ideal gas, the partial pressure divided by the total pressure is equal to the constituent's molar concentration, x.

Percent (%) means a representation of exactly 0.01. Numbers expressed as percentages in this part (such as a tolerance of ±2%) have infinite precision, so 2% and 2.000000000% have the same meaning. This means that where we specify some percentage of a total value, the calculated value has the same number of significant digits as the total value. For example, 2% of a span value where the span value is 101.3302 is 2.026604.

Portable emission measurement system (PEMS) means a measurement system consisting of portable equipment that can be used to generate brake-specific emission measurements during field testing or laboratory testing.

Precision means two times the standard deviation of a set of measured values of a single zero or reference quantity. See also the related definitions of *noise* and *repeatability* in this section.

Procedures means all aspects of engine testing, including the equipment specifications, calibrations, calculations and other protocols and specifications needed to measure emissions, unless we specify otherwise.

Proving ring is a device used to measure static force based on the linear relationship between stress and strain in an elastic material. It is typically a steel alloy ring, and you measure the deflection (strain) of its diameter when a static force (stress) is applied across its diameter.

PTFE means polytetrafluoroethylene, commonly known as Teflon™.

Purified air means air meeting the specifications for purified air in § 1065.750. Purified air may be produced by purifying ambient air. The purification may occur at the test site or at another location (such as at a gas supplier's facility). Alternatively, purified air may be synthetically generated, using good engineering judgment, from purified oxygen and nitrogen. The addition of other elements normally present in purified ambient air (such as Ar) is not required.

Ramped-modal means relating to a ramped-modal type of steady-state test, as described in the standard-setting part.

Recommend has the meaning given in § 1065.201.

Regression statistics means any of the regression statistics specified in § 1065.602.

Repeatability means the precision of ten mean measurements of a reference quantity. Determine instrument repeatability, accuracy, and noise from the same data set. We specify a procedure for determining repeatability in § 1065.305.

Revoke has the meaning given in 40 CFR 1068.30.

Rise time, t_{10-90}, means the time interval of a measurement instrument's response after any step increase to the input between the following points:

(1) The point at which the response has risen 10% of the total amount it will rise in response to the step change.

(2) The point at which the response has risen 90% of the total amount it will rise in response to the step change.

Roughness (or average roughness, R_a) means the size of finely distributed vertical surface deviations from a smooth surface, as determined when traversing a surface. It is an integral of the absolute value of the roughness profile measured over an evaluation length.

Round means to apply the rounding convention specified in § 1065.20(e), unless otherwise specified.

Scheduled maintenance means adjusting, repairing, removing, disassembling, cleaning, or replacing components or systems periodically to keep a part or system from failing, malfunctioning, or wearing prematurely. It also may mean actions you expect are necessary to correct an overt indication of failure or malfunction for which periodic maintenance is not appropriate.

Shared atmospheric pressure meter means an atmospheric pressure meter

whose output is used as the atmospheric pressure for an entire test facility that has more than one dynamometer test cell.

Shared humidity measurement means a humidity measurement that is used as the humidity for an entire test facility that has more than one dynamometer test cell.

Span means to adjust an instrument so that it gives a proper response to a calibration standard that represents between 75% and 100% of the maximum value in the instrument range or expected range of use.

Span gas means a purified gas mixture used to span gas analyzers. Span gases must meet the specifications of § 1065.750. Note that calibration gases and span gases are qualitatively the same, but differ in terms of their primary function. Various performance verification checks for gas analyzers and sample handling components might refer to either calibration gases or span gases.

Spark-ignition means relating to a gasoline-fueled engine or any other type of engine with a spark plug (or other sparking device) and with operating characteristics significantly similar to the theoretical Otto combustion cycle. Spark-ignition engines usually use a throttle to regulate intake air flow to control power during normal operation.

Special procedures means procedures allowed under § 1065.10(c)(2).

Specified procedures means procedures we specify in this part 1065 or the standard-setting part. Other procedures allowed or required by § 1065.10(c) are not specified procedures.

Standard deviation has the meaning given in § 1065.602. Note this is the standard deviation for a non-biased sample.

Standard-setting part means the part in the Code of Federal Regulations that defines emission standards for a particular engine. See § 1065.1(a).

Steady-state means relating to emission tests in which engine speed and load are held at a finite set of nominally constant values. Steady-state tests are either discrete-mode tests or ramped-modal tests.

Stoichiometric means relating to the particular ratio of air and fuel such that if the fuel were fully oxidized, there would be no remaining fuel or oxygen. For example, stoichiometric combustion in a gasoline-fueled engine typically occurs at an air-to-fuel mass ratio of about 14.7:1.

Storage medium means a particulate filter, sample bag, or any other storage device used for batch sampling.

t_{0-50} means the time interval of a measurement system's response after any step increase to the input between the following points:

(1) The point at which the step change is initiated at the sample probe.

(2) The point at which the response has risen 50% of the total amount it will rise in response to the step change.

t_{100-50} means the time interval of a measurement system's response after any step decrease to the input between the following points:

(1) The point at which the step change is initiated at the sample probe.

(2) The point at which the response has fallen 50% of the total amount it will fall in response to the step change.

Test engine means an engine in a test sample.

Test interval means a duration of time over which you determine brake-specific emissions. For example, the standard-setting part may specify a complete laboratory duty cycle as a cold-start test interval, plus a hot-start test interval. As another example, a standard-setting part may specify a field-test interval, such as a ''not-to-exceed'' (NTE) event, as a duration of time over which an engine operates within a certain range of speed and torque. In cases where multiple test intervals occur over a duty cycle, the standard-setting part may specify additional calculations that weight and combine results to arrive at composite values for comparison against the applicable standards.

Test sample means the collection of engines selected from the population of an engine family for emission testing.

Tolerance means the interval in which at least 95% of a set of recorded values of a certain quantity must lie. Use the specified recording frequencies and time intervals to determine if a quantity is within the applicable tolerance. The concept of tolerance is intended to address random variability.

You may not take advantage of the tolerance specification to incorporate a bias into a measurement.

Total hydrocarbon (THC) means the combined mass of organic compounds measured by the specified procedure for measuring total hydrocarbon, expressed as a hydrocarbon with a hydrogen-to-carbon mass ratio of 1.85:1.

Total hydrocarbon equivalent (THCE) means the sum of the carbon mass contributions of non-oxygenated hydrocarbons, alcohols and aldehydes, or other organic compounds that are measured separately as contained in a gas sample, expressed as exhaust hydrocarbon from petroleum-fueled engines. The hydrogen-to-carbon ratio of the equivalent hydrocarbon is 1.85:1.

Transformation time, t_{50}, means the overall system response time to any step change in input, generally the average of the time to reach 50% response to a step increase, t_{0-50}, or to a step decrease, t_{100-50}.

Uncertainty means uncertainty with respect to NIST-traceability. See the definition of NIST-traceable in this section.

United States means the States, the District of Columbia, the Commonwealth of Puerto Rico, the Commonwealth of the Northern Mariana Islands, Guam, American Samoa, and the U.S. Virgin Islands.

Useful life means the period during which a new engine is required to comply with all applicable emission standards. The standard-setting part defines the specific useful-life periods for individual engines.

Variable-speed engine means an engine that is not a constant-speed engine.

Vehicle means any vehicle, vessel, or type of equipment using engines to which this part applies. For purposes of this part, the term ''vehicle'' may include nonmotive machines or equipment such as a pump or generator.

Verification means to evaluate whether or not a measurement system's outputs agree with a range of applied reference signals to within one or more predetermined thresholds for acceptance. Contrast with ''calibration''.

We (us, our) means the Administrator of the Environmental Protection Agency and any authorized representatives.

Work has the meaning given in § 1065.110.

Zero means to adjust an instrument so it gives a zero response to a zero calibration standard, such as purified nitrogen or purified air for measuring concentrations of emission constituents.

Zero gas means a gas that yields a zero response in an analyzer. This may either be purified nitrogen, purified air, a combination of purified air and purified nitrogen. For field testing, *zero gas* may include ambient air.

[70 FR 40516, July 13, 2005, as amended at 73 FR 37346, June 30, 2008; 73 FR 59342, Oct. 8, 2008; 74 FR 8428, Feb. 24, 2009; 74 FR 56518, Oct. 30, 2009; 75 FR 23058, Apr. 30, 2010; 76 FR 57467, Sept. 15, 2011; 79 FR 23814, Apr. 28, 2014; 81 FR 74191, Oct. 25, 2016]

EFFECTIVE DATE NOTE: At 86 FR 34575, June 29, 2021, § 1065.1001 was amended, effective July 29, 2021.

§ 1065.1005 Symbols, abbreviations, acronyms, and units of measure.

The procedures in this part generally follow the International System of Units (SI), as detailed in NIST Special Publication 811, which we incorporate by reference in § 1065.1010. See § 1065.20 for specific provisions related to these conventions. This section summarizes the way we use symbols, units of measure, and other abbreviations.

(a) *Symbols for quantities*. This part uses the following symbols and units of measure for various quantities:

Symbol	Quantity	Unit	Unit symbol	Units in terms of SI base units
α	atomic hydrogen-to-carbon ratio	mole per mole	mol/mol	1.
A	area	square meter	m^2	m^2.
a_0	intercept of least squares regression.			
a_1	slope of least squares regression.			
a_g	acceleration of Earth's gravity	meter per square second	m/s^2	$m \cdot s^{-2}$.
β	ratio of diameters	meter per meter	m/m	1.
β	atomic oxygen-to-carbon ratio	mole per mole	mol/mol	1.

Symbol	Quantity	Unit	Unit symbol	Units in terms of SI base units
$C_{\#}$	number of carbon atoms in a molecule.			
C_d	discharge coefficient.			
C_f	flow coefficient.			
δ	atomic nitrogen-to-carbon ratio	mole per mole	mol/mol	1.
d	Diameter	meter	m	m.
DR	dilution ratio	mole per mole	mol/mol	1.
ε	error between a quantity and its reference.			
e	brake-specific emission or fuel consumption.	gram per kilowatt hour	g/(kW·hr)	$\cdot 3.6 \cdot 10^{-6} \cdot ; m^{-2} \cdot kg^{-1} \cdot s^2$.
F	F-test statistic.			
f	frequency	hertz	Hz	s^{-1}.
f_n	angular speed (shaft)	revolutions per minute	r/min	$\pi \cdot 30^{-1} \cdot s^{-1}$.
γ	ratio of specific heats	(joule per kilogram kelvin) per (joule per kilogram kelvin).	(J/(kg·K))/(J/(kg·K)).	1.
γ	atomic sulfur-to-carbon ratio	mole per mole	mol/mol	1.
K	correction factor			1.
K_v	calibration coefficient		$m^4 \cdot ; s \cdot K^{0.5}/kg$	$m^4 \cdot kg^{-1} s \cdot K^{0.5}$.
l	length	meter	m	m.
μ	viscosity, dynamic	pascal second	Pa·s	$m^{-1} \cdot kg \cdot s^{-1}$.
M	molar mass [1]	gram per mole	g/mol	$10^{-3} \cdot kg \cdot mol^{-1}$.
m	mass	kilogram	kg	kg.
$\dot{m}$	mass rate	kilogram per second	kg/s	$kg \cdot s^{-1}$.
ν	viscosity, kinematic	meter squared per second	m^2/s	$m^2 \cdot s^{-1}$.
N	total number in series.			
n	amount of substance	mole	mol	mol.
$\dot{n}$	amount of substance rate	mole per second	mol/s	$mol \cdot s^{-1}$.
P	power	kilowatt	kW	$10^3 \cdot m^2 \cdot kg \cdot s^{-3}$.
PF	penetration fraction.			
p	pressure	pascal	Pa	$m^{-1} \cdot kg \cdot s^{-2}$.
ρ	mass density	kilogram per cubic meter	kg/m^3	$m_{-3} \cdot kg$.
Δ	differential static pressure	pascal	Pa	$m^{-1} \cdot kg \cdot s^{-2}$.
r	ratio of pressures	pascal per pascal	Pa/Pa	1.
r^2	coefficient of determination.			
Ra	average surface roughness	micrometer	µm	$10^{-6} \cdot m$.
$Re^{\#}$	Reynolds number.			
RF	response factor.			
RH	relative humidity.			
σ	non-biased standard deviation.			
S	Sutherland constant	kelvin	K	K.
SEE	standard estimate of error.			
T	absolute temperature	kelvin	K	K.
T	Celsius temperature	degree Celsius	°C	K—273.15.
T	torque (moment of force)	newton meter	N·m	$m^2 \cdot kg \cdot s^{-2}$.
θ	plane angle	degrees	°	rad.
t	time	second	s	s.
Δt	time interval, period, 1/frequency	second	s	s.
V	volume	cubic meter	m^3	m^3.
$\dot{V}$	volume rate	cubic meter per second	m^3/s	$m^3 \cdot s^{-1}$.
W	work	kilowatt-hour	kW·hr	$3.6^{-1} \cdot 10^6 \cdot m^2 \cdot kg \cdot s^{-2}$.
w_C	carbon mass fraction	gram per gram	g/g	1.
x	amount of substance mole fraction [2].	mole per mole	mol/mol	1.
$\bar{x}$	flow-weighted mean concentration	mole per mole	mol/mol	1.
y	generic variable.			
Z	compressibility factor.			

[1] See paragraph (f)(2) of this section for the values to use for molar masses. Note that in the cases of NO_X and HC, the regulations specify effective molar masses based on assumed speciation rather than actual speciation.
[2] Note that mole fractions for THC, THCE, NMHC, NMHCE, and NOTHC are expressed on a C_1-equivalent basis.

(b) *Symbols for chemical species*. This part uses the following symbols for chemical species and exhaust constituents:

Symbol	Species
Ar	argon.
C	carbon.
CH_2O	formaldehyde.
CH_2O_2	formic acid.
CH_3OH	methanol.
CH_4	methane.
C_2H_4O	acetaldehyde.
C_2H_5OH	ethanol.
C_2H_6	ethane.

Symbol	Species
C_3H_7OH	propanol.
C_3H_8	propane.
C_4H_{10}	butane.
C_5H_{12}	pentane.
CO	carbon monoxide.
CO_2	carbon dioxide.
H	atomic hydrogen.
H_2	molecular hydrogen.
H_2O	water.
H_2SO_4	sulfuric acid.
HC	hydrocarbon.
He	helium.
^{85}Kr	krypton 85.
N_2	molecular nitrogen.
NH_3	ammonia.
NMHC	nonmethane hydrocarbon.
NMHCE	nonmethane hydrocarbon equivalent.
NMNEHC	nonmethane-nonethane hydrocarbon.
NO	nitric oxide.
NO_2	nitrogen dioxide.
NO_X	oxides of nitrogen.
N_2O	nitrous oxide.
NMOG	nonmethane organic gases.
NONMHC	non-oxygenated nonmethane hydrocarbon.
NOTHC	non-oxygenated total hydrocarbon.
O_2	molecular oxygen.
OHC	oxygenated hydrocarbon.
^{210}Po	polonium 210.
PM	particulate matter.
S	sulfur.
SVOC	semi-volatile organic compound.
THC	total hydrocarbon.
THCE	total hydrocarbon equivalent.
ZrO_2	zirconium dioxide.

(c) *Prefixes*. This part uses the following prefixes to define a quantity:

Symbol	Quantity	Value
μ	micro	10^{-6}
m	milli	10^{-3}
c	centi	10^{-2}
k	kilo	10^{3}
M	mega	10^{6}

(d) *Superscripts*. This part uses the following superscripts to define a quantity:

Superscript	Quantity
overbar (such as $\bar{y}$).	arithmetic mean.
overdot (such as $\dot{y}$).	quantity per unit time.

(e) *Subscripts*. This part uses the following subscripts to define a quantity:

Subscript	Quantity
abs	absolute quantity.
act	actual condition.
air	air, dry.
amb	ambient.
atmos	atmospheric.
bkgnd	background.
cal	calibration quantity.
CFV	critical flow venturi.
comb	combined.
composite	composite value.
cor	corrected quantity.
dil	dilution air.
dew	dewpoint.
dexh	diluted exhaust.
dry	dry condition.
dutycycle	duty cycle.
exh	raw exhaust.
exp	expected quantity.
fn	feedback speed.
frict	friction.
fuel	fuel consumption.
hi, idle	condition at high-idle.
i	an individual of a series.
idle	condition at idle.
in	quantity in.
init	initial quantity, typically before an emission test.
int	intake air.
j	an individual of a series.
mapped	conditions over which an engine can operate.
max	the maximum (i.e., peak) value expected at the standard over a test interval; not the maximum of an instrument range.
meas	measured quantity.
media	PM sample media.
mix	mixture of diluted exhaust and air.
norm	normalized.
out	quantity out.
P	power.
part	partial quantity.
PDP	positive-displacement pump.
post	after the test interval.
pre	before the test interval.
prod	stoichiometric product.
record	record rate.
ref	reference quantity.
rev	revolution.
sat	saturated condition.
s	slip.
span	span quantity.
SSV	subsonic venturi.
std	standard condition.
stroke	engine strokes per power stroke.
T	torque.
test	test quantity.
test, alt	alternate test quantity.
uncor	uncorrected quantity.
vac	vacuum side of the sampling system.
weight	calibration weight.
zero	zero quantity.

(f) *Constants*. (1) This part uses the following constants for the composition of dry air:

Symbol	Quantity	mol/mol
x_{Arair}	amount of argon in dry air	0.00934
x_{CO2air}	amount of carbon dioxide in dry air	0.000375
x_{N2air}	amount of nitrogen in dry air	0.78084
x_{O2air}	amount of oxygen in dry air	0.209445

(2) This part uses the following molar masses or effective molar masses of chemical species:

Symbol	Quantity	g/mol (10^{-3}·kg·mol^{-1})
M_{air}	molar mass of dry air[1]	28.96559
M_{Ar}	molar mass of argon	39.948
M_{C}	molar mass of carbon	12.0107
M_{CH3OH}	molar mass of methanol	32.04186
M_{C2H5OH}	molar mass of ethanol	46.06844
M_{C2H4O}	molar mass of acetaldehyde	44.05256
M_{CH4N2O}	molar mass of urea	60.05526
M_{C3H8}	molar mass of propane	44.09562
M_{C3H7OH}	molar mass of propanol	60.09502
M_{CO}	molar mass of carbon monoxide	28.0101
M_{CH4}	molar mass of methane	16.0425
M_{CO2}	molar mass of carbon dioxide	44.0095
M_{H}	molar mass of atomic hydrogen	1.00794
M_{H2}	molar mass of molecular hydrogen	2.01588
M_{H2O}	molar mass of water	18.01528
M_{CH2O}	molar mass of formaldehyde	30.02598
M_{He}	molar mass of helium	4.002602
M_{N}	molar mass of atomic nitrogen	14.0067
M_{N2}	molar mass of molecular nitrogen	28.0134
M_{NH3}	molar mass of ammonia	17.03052
M_{NMHC}	effective C_1 molar mass of nonmethane hydrocarbon[2]	13.875389
M_{NMHCE}	effective C_1 molar mass of nonmethane hydrocarbon equivalent[2]	13.875389
M_{NMNEHC}	effective C_1 molar mass of nonmethane-nonethane hydrocarbon[2]	13.875389
M_{NOx}	effective molar mass of oxides of nitrogen[3]	46.0055
M_{N2O}	molar mass of nitrous oxide	44.0128
M_{O}	molar mass of atomic oxygen	15.9994
M_{O2}	molar mass of molecular oxygen	31.9988
M_{S}	molar mass of sulfur	32.065
M_{THC}	effective C_1 molar mass of total hydrocarbon[2]	13.875389
M_{THCE}	effective C_1 molar mass of total hydrocarbon equivalent[2]	13.875389

[1] See paragraph (f)(1) of this section for the composition of dry air.
[2] The effective molar masses of THC, THCE, NMHC, NMHCE, and NMNEHC are defined on a C_1 basis and are based on an atomic hydrogen-to-carbon ratio, α, of 1.85 (with β, γ, and δ equal to zero).
[3] The effective molar mass of NO_X is defined by the molar mass of nitrogen dioxide, NO_2.

(3) This part uses the following molar gas constant for ideal gases:

Symbol	Quantity	J/(mol · K) ($m^2 \cdot kg \cdot s^{-2} \cdot mol^{-1} \cdot K^{-1}$)
R	molar gas constant	8.314472

(4) This part uses the following ratios of specific heats for dilution air and diluted exhaust:

Symbol	Quantity	[J/(kg · K)]/[J/(kg · K)]
γ_{air}	ratio of specific heats for intake air or dilution air	1.399
γ_{dil}	ratio of specific heats for diluted exhaust	1.399
γ_{exh}	ratio of specific heats for raw exhaust	1.385

(g) *Other acronyms and abbreviations.* This part uses the following additional abbreviations and acronyms:

ABS	acrylonitrile-butadiene-styrene.
ASTM	American Society for Testing and Materials.
BMD	bag mini-diluter.
BSFC	brake-specific fuel consumption.
CARB	California Air Resources Board.
CFR	Code of Federal Regulations.
CFV	critical-flow venturi.
CI	compression-ignition.
CITT	Curb Idle Transmission Torque.
CLD	chemiluminescent detector.
CVS	constant-volume sampler.
DF	deterioration factor.
ECM	electronic control module.
EFC	electronic flow control.
e.g	for example.
EGR	exhaust gas recirculation.
EPA	Environmental Protection Agency.
FEL	Family Emission Limit.
FID	flame-ionization detector.
FTIR	Fourier transform infrared.
GC	gas chromatograph.
GC–ECD	gas chromatograph with an electron-capture detector.

GC–FID	gas chromatograph with a flame ionization detector.
HEPA	high-efficiency particulate air.
IBP	initial boiling point.
IBR	incorporated by reference.
i.e	in other words.
ISO	International Organization for Standardization.
LPG	liquefied petroleum gas.
MPD	magnetopneumatic detection.
NDIR	nondispersive infrared.
NDUV	nondispersive ultraviolet.
NIST	National Institute for Standards and Technology.
NMC	nonmethane cutter.
PDP	positive-displacement pump.
PEMS	portable emission measurement system.
PFD	partial-flow dilution.
PLOT	porous layer open tubular.
PMD	paramagnetic detection.
PMP	Polymethylpentene.
pt	a single point at the mean value expected at the standard.
psi	pounds per square inch.
PTFE	polytetrafluoroethylene (commonly known as Teflon ™).
RE	rounding error.
RESS	rechargeable energy storage system.
RFPF	response factor penetration fraction.
RMC	ramped-modal cycle.
rms	root-mean square.
RTD	resistive temperature detector.
SAW	surface acoustic wave.
SEE	standard estimate of error.
SSV	subsonic venturi.
SI	spark-ignition.
THC–FID	total hydrocarbon flame ionization detector.
TINV	inverse student *t*-test function in Microsoft Excel.
UCL	upper confidence limit.
UFM	ultrasonic flow meter.
U.S.C	United States Code.

[79 FR 23815, Apr. 28, 2014, as amended at 81 FR 74191, Oct. 25, 2016]

EFFECTIVE DATE NOTE: At 86 FR 34575, June 29, 2021, § 1065.1005 was amended, effective July 29, 2021.

§ 1065.1010 Incorporation by reference.

(a) Certain material is incorporated by reference into this part with the approval of the Director of the Federal Register under 5 U.S.C. 552(a) and 1 CFR part 51. To enforce any edition other than that specified in this section, a document must be published in the FEDERAL REGISTER and the material must be available to the public. All approved materials are available for inspection at the Air and Radiation Docket and Information Center (Air Docket) in the EPA Docket Center (EPA/DC) at Rm. 3334, EPA West Bldg., 1301 Constitution Ave. NW., Washington, DC. The EPA/DC Public Reading Room hours of operation are 8:30 a.m. to 4:30 p.m., Monday through Friday, excluding legal holidays. The telephone number of the EPA/DC Public Reading Room is (202) 566–1744, and the telephone number for the Air Docket is (202) 566–1742. These approved materials are also available for inspection at the National Archives and Records Administration (NARA).For information on the availability of this material at NARA, email fedreg.legal@nara.gov or go to www.archives.gov/federal-register/cfr/ibr-locations.html. In addition, these materials are available from the sources listed below.

(b) *ASTM material.* The following standards are available from ASTM International, 100 Barr Harbor Dr., P.O. Box C700, West Conshohocken, PA 19428–2959, (877) 909–2786, or *http://www.astm.org*:

(1) ASTM D86–12, Standard Test Method for Distillation of Petroleum Products at Atmospheric Pressure, approved December 1, 2012 (''ASTM D86''), IBR approved for §§ 1065.703(b) and 1065.710(b) and (c).

(2) ASTM D93–13, Standard Test Methods for Flash Point by Pensky-Martens Closed Cup Tester, approved July 15, 2013 (''ASTM D93''), IBR approved for § 1065.703(b).

(3) ASTM D130–12, Standard Test Method for Corrosiveness to Copper from Petroleum Products by Copper Strip Test, approved November 1, 2012 (''ASTM D130''), IBR approved for § 1065.710(b).

(4) ASTM D381–12, Standard Test Method for Gum Content in Fuels by Jet Evaporation, approved April 15, 2012 (''ASTM D381''), IBR approved for § 1065.710(b).

(5) ASTM D445–12, Standard Test Method for Kinematic Viscosity of Transparent and Opaque Liquids (and Calculation of Dynamic Viscosity), approved April 15, 2012 (''ASTM D445''), IBR approved for § 1065.703(b).

(6) ASTM D525–12a, Standard Test Method for Oxidation Stability of Gasoline (Induction Period Method), approved September 1, 2012 (''ASTM D525''), IBR approved for § 1065.710(b).

(7) ASTM D613–13, Standard Test Method for Cetane Number of Diesel Fuel Oil, approved December 1, 2013 (''ASTM D613''), IBR approved for § 1065.703(b).

(8) ASTM D910–13a, Standard Specification for Aviation Gasolines, approved December 1, 2013 (''ASTM D910''), IBR approved for § 1065.701(f).

(9) ASTM D975–13a, Standard Specification for Diesel Fuel Oils, approved December 1, 2013 (''ASTM D975''), IBR approved for § 1065.701(f).

(10) ASTM D1267–12, Standard Test Method for Gage Vapor Pressure of Liquefied Petroleum (LP) Gases (LP-Gas Method), approved

November 1, 2012 (''ASTM D1267''), IBR approved for § 1065.720(a).

(11) ASTM D1319–13, Standard Test Method for Hydrocarbon Types in Liquid Petroleum Products by Fluorescent Indicator Adsorption, approved May 1, 2013 (''ASTM D1319''), IBR approved for § 1065.710(c).

(12) ASTM D1655–13a, Standard Specification for Aviation Turbine Fuels, approved December 1, 2013 (''ASTM D1655''), IBR approved for § 1065.701(f).

(13) ASTM D1837–11, Standard Test Method for Volatility of Liquefied Petroleum (LP) Gases, approved October 1, 2011 (''ASTM D1837''), IBR approved for § 1065.720(a).

(14) ASTM D1838–12a, Standard Test Method for Copper Strip Corrosion by Liquefied Petroleum (LP) Gases, approved December 1, 2012 (''ASTM D1838''), IBR approved for § 1065.720(a).

(15) ASTM D1945–03 (Reapproved 2010), Standard Test Method for Analysis of Natural Gas by Gas Chromatography, approved January 1, 2010 (''ASTM D1945''), IBR approved for § 1065.715(a).

(16) ASTM D2158–11, Standard Test Method for Residues in Liquefied Petroleum (LP) Gases, approved January 1, 2011 (''ASTM D2158''), IBR approved for § 1065.720(a).

(17) ASTM D2163–07, Standard Test Method for Determination of Hydrocarbons in Liquefied Petroleum (LP) Gases and Propane/Propene Mixtures by Gas Chromatography, approved December 1, 2007 (''ASTM D2163''), IBR approved for § 1065.720(a).

(18) ASTM D2598–12, Standard Practice for Calculation of Certain Physical Properties of Liquefied Petroleum (LP) Gases from Compositional Analysis, approved November 1, 2012 (''ASTM D2598''), IBR approved for § 1065.720(a).

(19) ASTM D2622–16, Standard Test Method for Sulfur in Petroleum Products by Wavelength Dispersive X-ray Fluorescence Spectrometry, approved January 1, 2016 (''ASTM D2622''), IBR approved for §§ 1065.703(b) and 1065.710(b) and (c).

(20) ASTM D2699–13b, Standard Test Method for Research Octane Number of Spark-Ignition Engine Fuel, approved October 1, 2013 (''ASTM D2699''), IBR approved for § 1065.710(b).

(21) ASTM D2700–13b, Standard Test Method for Motor Octane Number of Spark-Ignition Engine Fuel, approved October 1, 2013 (''ASTM D2700''), IBR approved for § 1065.710(b).

(22) ASTM D2713–13, Standard Test Method for Dryness of Propane (Valve Freeze Method), approved October 1, 2013 (''ASTM D2713''), IBR approved for § 1065.720(a).

(23) ASTM D2784–11, Standard Test Method for Sulfur in Liquefied Petroleum Gases (Oxy-Hydrogen Burner or Lamp), approved January 1, 2011 (''ASTM D2784''), IBR approved for § 1065.720(a).

(24) ASTM D2880–13b, Standard Specification for Gas Turbine Fuel Oils, approved November 15, 2013 (''ASTM D2880''), IBR approved for § 1065.701(f).

(25) ASTM D2986–95a, Standard Practice for Evaluation of Air Assay Media by the Monodisperse DOP (Dioctyl Phthalate) Smoke Test, approved September 10, 1995 (''ASTM D2986''), IBR approved for § 1065.170(c). (Note: This standard was withdrawn by ASTM.)

(26) ASTM D3231–13, Standard Test Method for Phosphorus in Gasoline, approved June 15, 2013 (''ASTM D3231''), IBR approved for § 1065.710(b) and (c).

(27) ASTM D3237–12, Standard Test Method for Lead in Gasoline By Atomic Absorption Spectroscopy, approved June 1, 2012 (''ASTM D3237''), IBR approved for § 1065.710(b) and (c).

(28) ASTM D4052–11, Standard Test Method for Density, Relative Density, and API Gravity of Liquids by Digital Density Meter, approved October 15, 2011 (''ASTM D4052''), IBR approved for § 1065.703(b).

(29) ASTM D4629–12, Standard Test Method for Trace Nitrogen in Liquid Petroleum Hydrocarbons by Syringe/Inlet Oxidative Combustion and Chemiluminescence Detection, approved April 15, 2012 (''ASTM D4629''), IBR approved for § 1065.655(e).

(30) ASTM D4814–13b, Standard Specification for Automotive Spark-Ignition Engine Fuel, approved December 1, 2013 (''ASTM D4814''), IBR approved for § 1065.701(f).

(31) ASTM D4815–13, Standard Test Method for Determination of MTBE, ETBE, TAME, DIPE, tertiary-Amyl Alcohol and C_1 to C_4 Alcohols in Gasoline by Gas Chromatography, approved October 1, 2013 (''ASTM D4815''), IBR approved for § 1065.710(b).

(32) ASTM D5186–03 (Reapproved 2009), Standard Test Method for Determination of the Aromatic Content and Polynuclear Aromatic Content of Diesel Fuels and Aviation Turbine Fuels By Supercritical Fluid Chromatography, approved April 15, 2009 (''ASTM D5186''), IBR approved for § 1065.703(b).

(33) ASTM D5191–13, Standard Test Method for Vapor Pressure of Petroleum Products (Mini Method), approved December 1, 2013 (''ASTM D5191''), IBR approved for § 1065.710(b) and (c).

(34) ASTM D5291–10, Standard Test Methods for Instrumental Determination of Carbon, Hydrogen, and Nitrogen in Petroleum Products and Lubricants, approved May 1, 2010 (''ASTM D5291''), IBR approved for § 1065.655(e).

(35) ASTM D5453–19a, Standard Test Method for Determination of Total Sulfur in Light Hydrocarbons, Spark Ignition Engine Fuel, Diesel Engine Fuel, and Engine Oil by Ultraviolet Fluorescence, approved July 1, 2019 (''ASTM D5453''), IBR approved for §§ 1065.703(b) and 1065.710(b).

(36) ASTM D5599–00 (Reapproved 2010), Standard Test Method for Determination of

Oxygenates in Gasoline by Gas Chromatography and Oxygen Selective Flame Ionization Detection, approved October 1, 2010 (''ASTM D5599''), IBR approved for §§ 1065.655(e) and 1065.710(b).

(37) ASTM D5762–12 Standard Test Method for Nitrogen in Petroleum and Petroleum Products by Boat-Inlet Chemiluminescence, approved April 15, 2012 (''ASTM D5762''), IBR approved for § 1065.655(e).

(38) ASTM D5769–10, Standard Test Method for Determination of Benzene, Toluene, and Total Aromatics in Finished Gasolines by Gas Chromatography/Mass Spectrometry, approved May 1, 2010 (''ASTM D5769''), IBR approved for § 1065.710(b).

(39) ASTM D5797–13, Standard Specification for Fuel Methanol (M70- M85) for Automotive Spark-Ignition Engines, approved June 15, 2013 (''ASTM D5797''), IBR approved for § 1065.701(f).

(40) ASTM D5798–13a, Standard Specification for Ethanol Fuel Blends for Flexible Fuel Automotive Spark-Ignition Engines, approved June 15, 2013 (''ASTM D5798''), IBR approved for § 1065.701(f).

(41) ASTM D6348–12$^{\varepsilon 1}$, Standard Test Method for Determination of Gaseous Compounds by Extractive Direct Interface Fourier Transform Infrared (FTIR) Spectroscopy, approved February 1, 2012 (''ASTM D6348''), IBR approved for §§ 1065.266(b) and 1065.275(b).

(42) ASTM D6550–10, Standard Test Method for Determination of Olefin Content of Gasolines by Supercritical-Fluid Chromatography, approved October 1, 2010 (''ASTM D6550''), IBR approved for § 1065.710(b).

(43) ASTM D6615–11a, Standard Specification for Jet B Wide-Cut Aviation Turbine Fuel, approved October 1, 2011 (''ASTM D6615''), IBR approved for § 1065.701(f).

(44) ASTM D6751–12, Standard Specification for Biodiesel Fuel Blend Stock (B100) for Middle Distillate Fuels, approved August 1, 2012 (''ASTM D6751''), IBR approved for § 1065.701(f).

(45) ASTM D6985–04a, Standard Specification for Middle Distillate Fuel Oil—Military Marine Applications, approved November 1, 2004 (''ASTM D6985''), IBR approved for § 1065.701(f). (NOTE: This standard was withdrawn by ASTM.)

(46) ASTM D7039–15a (Reapproved 2020), Standard Test Method for Sulfur in Gasoline, Diesel Fuel, Jet Fuel, Kerosine, Biodiesel, Biodiesel Blends, and Gasoline-Ethanol Blends by Monochromatic Wavelength Dispersive X-ray Fluorescence Spectrometry, approved May 1, 2020 (''ASTM D7039''), IBR approved for §§ 1065.703(b) and 1065.710(b).

(47) ASTM F1471–09, Standard Test Method for Air Cleaning Performance of a High- Efficiency Particulate Air Filter System, approved March 1, 2009 (''ASTM F1471''), IBR approved for § 1065.1001.

(c) *California Air Resources Board material*. The following documents are available from the California Air Resources Board, Haagen-Smit Laboratory, 9528 Telstar Ave., El Monte, CA 91731–2908, (800) 242–4450, or *http://www.arb.ca.gov*:

(1) California Non-Methane Organic Gas Test Procedures, Amended July 30, 2002, Mobile Source Division, California Air Resources Board, IBR approved for § 1065.805(f).

(2) [Reserved]

(d) *Institute of Petroleum material*. The following documents are available from the Energy Institute, 61 New Cavendish St., London, W1G 7AR, UK, or by calling + 44–(0)20–7467–7100, or at *http://www.energyinst.org*:

(1) IP–470, 2005, Determination of aluminum, silicon, vanadium, nickel, iron, calcium, zinc, and sodium in residual fuels by atomic absorption spectrometry, IBR approved for § 1065.705(b).

(2) IP–500, 2003, Determination of the phosphorus content of residual fuels by ultra-violet spectrometry, IBR approved for § 1065.705(b).

(3) IP–501, 2005, Determination of aluminum, silicon, vanadium, nickel, iron, sodium, calcium, zinc and phosphorus in residual fuel oil by ashing, fusion and inductively coupled plasma emission spectrometry, IBR approved for § 1065.705(b).

(e) *ISO material*. The following standards are available from the International Organization for Standardization, 1, ch. de la Voie-Creuse, CP 56, CH–1211 Geneva 20, Switzerland, 41–22–749–01–11, or *http://www.iso.org*:

(1) ISO 2719:2002, Determination of flash point—Pensky-Martens closed cup method (''ISO 2719''), IBR approved for § 1065.705(c).

(2) ISO 3016:1994, Petroleum products—Determination of pour point (''ISO 3016''), IBR approved for § 1065.705(c).

(3) ISO 3104:1994/Cor 1:1997, Petroleum products—Transparent and opaque liquids—Determination of kinematic viscosity and calculation of dynamic viscosity (''ISO 3104''), IBR approved for § 1065.705(c).

(4) ISO 3675:1998, Crude petroleum and liquid petroleum products—Laboratory determination of density—Hydrometer method (''ISO 3675''), IBR approved for § 1065.705(c).

(5) ISO 3733:1999, Petroleum products and bituminous materials—Determination of water—Distillation method (''ISO 3733''), IBR approved for § 1065.705(c).

(6) ISO 6245:2001, Petroleum products—Determination of ash (''ISO 6245''), IBR approved for § 1065.705(c).

(7) ISO 8217:2012(E), Petroleum products—Fuels (class F)—Specifications of marine fuels, Fifth edition, August 15, 2012 (''ISO 8217''), IBR approved for § 1065.705(b) and (c).

(8) ISO 8754:2003, Petroleum products—Determination of sulfur content—Energy-dispersive X-ray Fluorescence spectrometry (''ISO 8754''), IBR approved for § 1065.705(c).

(9) ISO 10307–2(E):2009, Petroleum products—Total sediment in residual fuel oils—Part 2: Determination using standard procedures for ageing, Second Ed., February 1, 2009 (''ISO 10307''), as modified by ISO 10307–2:2009/Cor.1:2010(E), Technical Corrigendum 1, published May 15, 2010, IBR approved for § 1065.705(c).

(10) ISO 10370:1993/Cor 1:1996, Petroleum products—Determination of carbon residue—Micro method (''ISO 10370''), IBR approved for § 1065.705(c).

(11) ISO 10478:1994, Petroleum products—Determination of aluminium and silicon in fuel oils—Inductively coupled plasma emission and atomic absorption spectroscopy methods (''ISO 10478''), IBR approved for § 1065.705(c).

(12) ISO 12185:1996/Cor 1:2001, Crude petroleum and petroleum products—Determination of density—Oscillating U-tube method (''ISO 12185''), IBR approved for § 1065.705(c).

(13) ISO 14596:2007, Petroleum products—Determination of sulfur content—Wavelength-dispersive X-ray fluorescence spectrometry (''ISO 14596''), IBR approved for § 1065.705(c).

(14) ISO 14597:1997, Petroleum products—Determination of vanadium and nickel content—Wavelength dispersive X-ray fluorescence spectrometry (''ISO 14597''), IBR approved for § 1065.705(c).

(15) ISO 14644–1:1999, Cleanrooms and associated controlled environments (''ISO 14644''), IBR approved for § 1065.190(b).

(f) *NIST material.* The following documents are available from National Institute of Standards and Technology, 100 Bureau Drive, Stop 1070, Gaithersburg, MD 20899–1070, (301) 975–6478, or *www.nist.gov*:

(1) NIST Special Publication 811, 2008 Edition, Guide for the Use of the International System of Units (SI), March 2008, IBR approved for §§ 1065.20(a) and 1065.1005.

(2) NIST Technical Note 1297, 1994 Edition, Guidelines for Evaluating and Expressing the Uncertainty of NIST Measurement Results, IBR approved for § 1065.1001.

(g) *SAE International material.* The following standards are available from SAE International, 400 Commonwealth Dr., Warrendale, PA 15096–0001, (724) 776–4841, or *http://www.sae.org*:

(1) SAE 770141, 1977, Optimization of Flame Ionization Detector for Determination of Hydrocarbon in Diluted Automotive Exhausts, Glenn D. Reschke, IBR approved for § 1065.360(c).

(2) SAE J1151, Methane Measurement Using Gas Chromatography, stabilized September 2011, IBR approved for §§ 1065.267(b) and 1065.750(a).

[79 FR 23818, Apr. 28, 2014, as amended at 81 FR 74193, Oct. 25, 2016; 85 FR 78468, Dec. 4, 2020]

EFFECTIVE DATE NOTE: At 86 FR 34579, June 29, 2021, § 1065.1010 was amended, effective July 29, 2021.

Subpart L—Methods for Unregulated and Special Pollutants

SOURCE: 79 FR 23820, Apr. 28, 2014, unless otherwise noted.

§ 1065.1101 Applicability.

This subpart specifies procedures that may be used to measure emission constituents that are not measured (or not separately measured) by the test procedures in the other subparts of this part. These procedures are included to facilitate consistent measurement of unregulated pollutants for purposes other than compliance with emission standards. Unless otherwise specified in the standard-setting part, use of these procedures is optional and does not replace any requirements in the rest of this part.

SEMI-VOLATILE ORGANIC COMPOUNDS

§ 1065.1103 General provisions for SVOC measurement.

The provisions of §§ 1065.1103 through 1065.1111 specify procedures for measuring semi-volatile organic compounds (SVOC) along with PM. These sections specify how to collect a sample of the SVOCs during exhaust emission testing, as well as how to use wet chemistry techniques to extract SVOCs from the sample media for analysis. Note that the precise method you use will depend on the category of SVOCs being measured. For example, the method used to measure polynuclear aromatic hydrocarbons (PAHs) will differ slightly from the method used to measure dioxins. Follow standard analytic

chemistry methods for any aspects of the analysis that are not specified.

(a) Laboratory cleanliness is especially important throughout SVOC testing. Thoroughly clean all sampling system components and glassware before testing to avoid sample contamination. For the purposes of this subpart, the sampling system is defined as sample pathway from the sample probe inlet to the downstream most point where the sample is captured (in this case the condensate trap).

(b) We recommend that media blanks be analyzed for each batch of sample media (sorbent, filters, etc.) prepared for testing. Blank sorbent modules (i.e., field blanks) should be stored in a sealed environment and should periodically accompany the test sampling system throughout the course of a test, including sampling system and sorbent module disassembly, sample packaging, and storage. Use good engineering judgment to determine the frequency with which you should generate field blanks. The field blank sample should be close to the sampler during testing.

(c) We recommend the use of isotope dilution techniques, including the use of isotopically labeled surrogate, internal, alternate, and injection standards.

(d) If your target analytes degrade when exposed to ultraviolet radiation, such as nitropolynuclear aromatic hydrocarbons (nPAHs), perform these procedures in the dark or with ultraviolet filters installed over the lights.

(e) The following definitions and abbreviations apply for SVOC measurements:

(1) *Soxhlet extraction* means the extraction method invented by Franz von Soxhlet, in which the sample is placed in a thimble and rinsed repeatedly with a recycle of the extraction solvent.

(2) *XAD–2* means a hydrophobic crosslinked polystyrene copolymer resin adsorbent known commercially as Amberlite® XAD®-2, or an equivalent adsorbent like XAD–4.

(3) *Semi-volatile organic compound (SVOC)* means an organic compound that is sufficiently volatile to exist in vapor form in engine exhaust, but that readily condenses to liquid or solid form under atmospheric conditions. Most SVOCs have at least 14 carbon atoms per molecule or they have a boiling point between (240 and 400) °C. SVOCs include dioxin, quinone, and nitro-PAH compounds. They may be a natural byproduct of combustion or they may be created post-combustion. Note that SVOCs may be included in measured values of hydrocarbons and/or PM using the procedures specified in this part.

(4) *Kuderna-Danish concentrator* means laboratory glassware known by this name that consists of an air-cooled condenser on top of an extraction bulb.

(5) *Dean-Stark trap* means laboratory glassware known by this name that uses a reflux condenser to collect water from samples extracted under reflux.

(6) *PUF* means polyurethane foam.

(7) *Isotopically labeled* means relating to a compound in which either all the hydrogen atoms are replaced with the atomic isotope hydrogen-2 (deuterium) or one of the carbon atoms at a defined position in the molecule is replaced with the atomic isotope carbon-13.

§ 1065.1105 Sampling system design.

(a) *General*. We recommend that you design your SVOC batch sampler to extract sample from undiluted emissions to maximize the sampled SVOC quantity. If you dilute your sample, we recommend using annular dilution. If you dilute your sample, but do not use annular dilution, you must precondition your sampling system to reach equilibrium with respect to loss and re-entrainment of SVOCs to the walls of the sampling system. To the extent practical, adjust sampling times based on the emission rate of target analytes from the engine to obtain analyte concentrations above the detection limit. In some instances you may need to run repeat test cycles without replacing the sample media or disassembling the batch sampler.

(b) *Sample probe, transfer lines, and sample media holder design and construction*. The sampling system should consist of a sample probe, transfer line, PM filter holder, cooling coil, sorbent module, and condensate trap. Construct sample probes, transfer lines, and sample media holders that have inside surfaces of nickel, titanium or another nonreactive material capable of

withstanding raw exhaust gas temperatures. Seal all joints in the hot zone of the system with gaskets made of nonreactive material similar to that of the sampling system components. You may use teflon gaskets in the cold zone. We recommend locating all components as close to probes as practical to shorten sampling system length and minimize the surface exposed to engine exhaust.

(c) *Sample system configuration.* This paragraph (c) specifies the components necessary to collect SVOC samples, along with our recommended design parameters. Where you do not follow our recommendations, use good engineering judgment to design your sampling system so it does not result in loss of SVOC during sampling. The sampling system should contain the following components in series in the order listed:

(1) Use a sample probe similar to the PM sample probe specified in subpart B of this part.

(2) Use a PM filter holder similar to the holder specified in subpart B of this part, although you will likely need to use a larger size to accommodate the high sample flow rates. We recommend using a 110 mm filter for testing spark ignition engines or engines that utilize exhaust aftertreatment for PM removal and a 293 mm filter for other engines. If you are not analyzing separately for SVOCs in gas and particle phases, you do not have to control the temperature of the filter holder. Note that this differs from normal PM sampling procedures, which maintain the filter at a much lower temperature to capture a significant fraction of exhaust SVOC on the filter. In this method, SVOCs that pass through the filter will be collected on the downstream sorbent module. If you are collecting SVOCs in gas and particle phases, control your filter face temperature according to § 1065.140(e)(4).

(3) Use good engineering judgment to design a cooling coil that will drop the sample temperature to approximately 5 °C. Note that downstream of the cooling coil, the sample will be a mixture of vapor phase hydrocarbons in CO_2, air, and a primarily aqueous liquid phase.

(4) Use a hydrophobic sorbent in a sealed sorbent module. Note that this sorbent module is intended to be the final stage for collecting the SVOC sample and should be sized accordingly. We recommend sizing the module to hold 40 g of XAD–2 along with PUF plugs at either end of the module, noting that you may vary the mass of XAD used for testing based on the anticipated SVOC emission concentration and sample flow rate.

(5) Include a condensate trap to separate the aqueous liquid phase from the gas stream. We recommend using a peristaltic pump to remove water from the condensate trap over the course of the test to prevent build-up of the condensate. Note that for some tests it may be appropriate to collect this water for analysis.

(d) *Sampler flow control.* For testing using the recommended filter and sorbent module sizes, we recommend targeting an average sample flow rate of 70 liters per minute to maximize SVOC collection. The sampler must be designed to maintain proportional sampling throughout the test. Verify proportional sampling after an emission test as described in § 1065.545.

(e) *Water bath.* Design the sample system with a water bath in which the cooling coil, sorbent module, and condensate trap will be submerged. Use a heat exchanger or ice to maintain the bath temperature at (3 to 7) °C.

[79 FR 23820, Apr. 28, 2014, as amended at 81 FR 74195, Oct. 25, 2016]

§ 1065.1107 Sample media and sample system preparation; sample system assembly.

This section describes the appropriate types of sample media and the cleaning procedure required to prepare the media and wetted sample surfaces for sampling.

(a) *Sample media.* The sampling system uses two types of sample media in series: The first to simultaneously capture the PM and associated particle phase SVOCs, and a second to capture SVOCs that remain in the gas phase, as follows:

(1) For capturing PM, we recommend using pure quartz filters with no binder if you are not analyzing separately for SVOCs in gas and particle phases. If you are analyzing separately, you must

use polytetrafluoroethylene (PTFE) filters with PTFE support. Select the filter diameter to minimize filter change intervals, accounting for the expected PM emission rate, sample flow rate. Note that when repeating test cycles to increase sample mass, you may replace the filter without replacing the sorbent or otherwise disassembling the batch sampler. In those cases, include all filters in the extraction.

(2) For capturing gaseous SVOCs, utilize XAD–2 resin with or without PUF plugs. Note that two PUF plugs are typically used to contain the XAD–2 resin in the sorbent module.

(b) *Sample media and sampler preparation*. Prepare pre-cleaned PM filters and pre-cleaned PUF plugs/XAD–2 as needed. Store sample media in containers protected from light and ambient air if you do not use them immediately after cleaning. Use the following preparation procedure, or an analogous procedure with different solvents and extraction times:

(1) Pre-clean the filters via Soxhlet extraction with methylene chloride for 24 hours and dry over dry nitrogen in a low-temperature vacuum oven.

(2) Pre-clean PUF and XAD–2 with a series of Soxhlet extractions: 8 hours with water, 22 hours with methanol, 22 hours with methylene chloride, and 22 hours with toluene, followed by drying with nitrogen.

(3) Clean sampler components, including the probe, filter holder, condenser, sorbent module, and condensate collection vessel by rinsing three times with methylene chloride and then three times with toluene. Prepare pre-cleaned aluminum foil for capping the probe inlet of the sampler after the sampling system has been assembled.

(c) *Sorbent spiking*. Use good engineering judgment to verify the extent to which your extraction methods recover SVOCs absorbed on the sample media. We recommend spiking the XAD–2 resin with a surrogate standard before testing with a carbon-13 or hydrogen-2 isotopically labeled standard for each of the class of analytes targeted for analysis. Perform this spiking as follows:

(1) Insert the lower PUF plug into the bottom of the sorbent module.

(2) Add half of one portion of XAD–2 resin to the module and spike the XAD–2 in the module with the standard.

(3) Wait 1 hour for the solvent from the standard(s) to evaporate, add the remaining 20 g of the XAD–2 resin to the module, and then insert a PUF plug in the top of the sorbent module.

(4) Cover the inlet and outlet of the sorbent module with pre-cleaned aluminum foil.

(d) *Sampling system assembly*. After preparing the sample media and the sampler, assemble the condensate trap, cooling coil, filter holder with filter, sample probe, and sorbent module, then lower the assembly into the reservoir. Cover the probe inlet with pre-cleaned aluminum foil.

[79 FR 23820, Apr. 28, 2014, as amended at 81 FR 74195, Oct. 25, 2016]

§ 1065.1109 Post-test sampler disassembly and sample extraction.

This section describes the process for disassembling and rinsing the sampling system and extracting and cleaning up the sample.

(a) *Sampling system disassembly*. Disassemble the sampling system in a clean environment as follows after the test:

(1) Remove the PM filter, PUF plugs, and all the XAD–2 from the sampling system and store them at or below 5 °C until analysis.

(2) Rinse sampling system wetted surfaces upstream of the condensate trap with acetone followed by toluene (or a comparable solvent system), ensuring that all the solvent remaining in liquid phase is collected (note that a fraction of the acetone and toluene will likely be lost to evaporation during mixing). Rinse with solvent volumes that are sufficient to cover all the surfaces exposed to the sample during testing. We recommend three fresh solvent rinses with acetone and two with toluene. We recommend rinse volumes of 60 ml per rinse for all sampling system components except the condenser coil, of which you should use 200 ml per rinse. Keep the acetone rinsate separate from the toluene rinsate to the extent practicable. Rinsate fractions should be stored separately in glass bottles that have been pre-rinsed with

acetone, hexane, and toluene (or purchase pre-cleaned bottles).

(3) Use good engineering judgment to determine if you should analyze the aqueous condensate phase for SVOCs. If you determine that analysis is necessary, use toluene to perform a liquid-liquid extraction of the SVOCs from the collected aqueous condensate using a separatory funnel or an equivalent method. Add the toluene from this aqueous extraction to the toluene rinsate fraction described in paragraph (a)(2) of this section.

(4) Reduce rinsate solvent volumes as needed using a Kuderna-Danish concentrator or rotary evaporator and retain these rinse solvents for reuse during sample media extraction for the same test. Be careful to avoid loss of low molecular weight analytes when concentrating with rotary evaporation.

(b) *Sample extraction*. Extract the SVOCs from the sorbent using Soxhlet extraction as described in this paragraph (b). Two 16 hour extractions are necessary to accommodate the Soxhlet extractions of all SVOCs from a single sample. This reduces the possibility of losing low molecular weight SVOCs and promotes water removal. We recommend performing the first extraction with acetone/hexane and the second using toluene (or an equivalent solvent system). You may alternatively use an equivalent method such as an automated solvent extractor.

(1) We recommend equipping the Soxhlet extractor with a Dean-Stark trap to facilitate removal of residual water from the sampling system rinse. The Soxhlet apparatus must be large enough to allow extraction of the PUF, XAD–2, and filter in a single batch. Include in the extractor setup a glass thimble with a coarse or extra coarse sintered glass bottom. Pre-clean the extractor using proper glass-cleaning procedures. We recommend that the Soxhlet apparatus be cleaned with a (4 to 8) hour Soxhlet extraction with methylene chloride at a cycling rate of three cycles per hour. Discard the solvent used for pre-cleaning (no analysis is necessary).

(2) Load the extractor thimble before placing it in the extractor by first rolling the PM filter around the inner circumference of the thimble, with the sampled side facing in. Push one PUF plug down into the bottom of the thimble, add approximately half of the XAD–2, and then spike the XAD–2 in the thimble with the isotopically labeled extraction standards of known mass. Target the center of the XAD–2 bed for delivering the extraction standard. We recommend using multiple isotopically labeled extraction standards that cover the range of target analytes. This generally means that you should use isotopically labeled standards at least for the lowest and highest molecular weight analytes for each category of compounds (such as PAHs and dioxins). These extraction standards monitor the efficiency of the extraction and are also used to determine analyte concentrations after analysis. Upon completion of spiking, add the remaining XAD–2 to the thimble, insert the remaining PUF plug, and place the thimble into the extractor. Note that if you are collecting and analyzing for SVOCs in gas and particle phases, perform separate extractions for the filter and XAD–2.

(3) For the initial extraction, combine the concentrated acetone rinses (from the sampling system in paragraph (a) of this section) with enough hexane to bring the solvent volume up to the target level of 700 ml. Assemble the extractor and turn on the heating controls and cooling water. Allow the sample to reflux for 16 hours with the rheostat adjusted to cycle the extraction at a rate of (3.0 ±0.5) cycles per hour. Drain the water from the Dean-Stark trap as it accumulates by opening the stopcock on the trap. Set aside the water for analysis or discard it. In most cases, any water present will be removed within approximately 2 hours after starting the extraction.

(4) After completing the initial extraction, remove the solvent and concentrate it to (4.0 ±0.5) ml using a Kuderna-Danish concentrator that includes a condenser such as a three-ball Snyder column with venting dimples and a graduated collection tube. Hold the water bath temperature at (75 to 80) °C. Using this concentrator will minimize evaporative loss of analytes with lower molecular weight.

(i) Rinse the round bottom flask of the extractor with (60 to 100) ml of

hexane and add the rinsate to this concentrated extract.

(ii) Concentrate the mixture to (4 ±0.5) ml using a Kuderna-Danish concentrator or similar apparatus.

(iii) Repeat the steps in paragraphs (b)(4)(i) and (ii) of this section three times, or as necessary to remove all the residual solvent from the round bottom flask of the extractor, concentrating the final rinsate to (4 ±0.5) ml.

(5) For the second extraction, combine the toluene rinses (from the sampling system in paragraph (a) of this section) with any additional toluene needed to bring the solvent volume up to the target level of 700 ml. As noted in paragraph (a) of this section, you may need to concentrate the rinsate before adding it to the extraction apparatus if the rinsate solvent volume is too large. Allow the sample to reflux for 16 hours with the rheostat adjusted to cycle the extraction at a rate of (3.0 ±0.5) cycles per hour. Check the Dean-Stark trap for water during the first 2 hours of the extraction (though little or no water should be present during this stage).

(6) Upon completion of the second extraction, remove the solvent and concentrate it to (4 ±0.5) ml as described in paragraph (b)(4) of this section. Using hexane from paragraph (b)(4) of this section as the rinse solvent effectively performs a solvent exchange of toluene with hexane.

(7) Combine the concentrated extract from paragraph (b)(4) of this section with the concentrated extract from paragraph (b)(6) of this section. Divide the extract into a number of fractions based on the number of analyses you need to perform. Perform the separate sample clean-up described in paragraph (c) of this section as needed for each fraction.

(c) *Sample clean-up*. This paragraph (c) describes how to perform sample cleaning to remove from the sample extract any solids and any SVOCs that will not be analyzed. This process, known as ''sample clean-up'', reduces the potential for interference or co-elution of peaks during analytical analysis. Before performing the sample clean-up, spike the extract with an alternate standard that contains a known mass of isotopically labeled compounds that are identical to the target analytes (except for the labeling). The category of the target analyte compounds (such as PAHs or dioxin) will determine the number of compounds that make up the standard. For example, PAHs require the use of four compounds in the alternate standard to cover the four basic ring structures of PAHs (2-ring, 3-ring, 4-ring, and 5-ring structures). These alternate standards are used to monitor the efficiency of the clean-up procedure. Before sample clean-up, concentrate the fractionated sample to about 2 ml with a Kuderna-Danish concentrator or rotary evaporator, and then transfer the extract to an 8 ml test tube with hexane rinse. Concentrate it to a volume of about 1 ml using a Kuderna-Danish concentrator. Use good engineering judgment to select an appropriate column chromatographic clean-up option for your target analytes. Note that these clean-up techniques generally remove compounds based on their polarity. The following procedures are examples of clean-up techniques for PAHs and nPAHs.

(1) *PAH clean-up*. The following method is appropriate for clean-up of extracts intended for analysis of PAHs:

(i) Pack a glass gravity column (250 mm × 10 mm recommended) by inserting a clean glass wool plug into the bottom of the column and add 10 g of activated silica gel in methylene chloride. Tap the column to settle the silica gel and then add a 1 cm layer of anhydrous sodium sulfate. Verify the volume of solvent required to completely elute all the PAHs and adjust the weight of the silica gel accordingly to account for variations among batches of silica gel that may affect the elution volume of the various PAHs.

(ii) Elute the column with 40 ml of hexane. The rate for all elutions should be about 2 ml/min. You may increase the elution rate by using dry air or nitrogen to maintain the headspace slightly above atmospheric pressure. Discard the eluate just before exposing the sodium sulfate layer to the air or nitrogen and transfer the 1 ml sample extract onto the column using two additional 2 ml rinses of hexane. Just before exposing the sodium sulfate layer to the air or nitrogen, begin elution of

the column with 25 ml of hexane followed by 25 ml of 40 volume % methylene chloride in hexane. Collect the entire eluate and concentrate it to about 5 ml using the Kuderna-Danish concentrator or a rotary evaporator. Make sure not to evaporate all the solvent from the extract during the concentration process. Transfer the eluate to a small sample vial using a hexane rinse and concentrate it to 100 µl using a stream of nitrogen without violently disturbing the solvent. Store the extracts in a refrigerator at or below 4 °C, and away from light.

(2) *nPAH clean up*. The following procedure, adapted from ''Determination and Comparison of Nitrated-Polycyclic Aromatic Hydrocarbons Measured in Air and Diesel Particulate Reference Materials'' (Bamford, H.A., *et al*, Chemosphere, Vol. 50, Issue 5, pages 575–587), is an appropriate method to clean up extracts intended for analysis of nPAHs:

(i) Condition an aminopropyl solid phase extraction (SPE) cartridge by eluting it with 20 ml of 20 volume % methylene chloride in hexane. Transfer the extract quantitatively to the SPE cartridge with at least two methylene chloride rinses. Elute the extract through the SPE cartridge by using 40 ml of 20 volume % methylene chloride in hexane to minimize potential interference of polar constituents, and then reduce the extract to 0.5 ml in hexane and subject it to normal-phase liquid chromatography using a pre-prepared 9.6 mm × 25 cm semi-preparative Chromegabond® amino/cyano column (5 µm particle size) to isolate the nPAH fraction. The mobile phase is 20 volume % methylene chloride in hexane at a constant flow rate of 5 ml per minute. Back-flash the column with 60 ml of methylene chloride and then condition it with 200 ml of 20 volume % methylene chloride in hexane before each injection. Collect the effluent and concentrate it to about 2 ml using the Kuderna-Danish concentrator or a rotary evaporator. Transfer it to a minivial using a hexane rinse and concentrate it to 100 µl using a gentle stream of nitrogen. Store the extracts at or below 4 °C, and away from light.

(ii) [Reserved]

[79 FR 23820, Apr. 28, 2014, as amended at 81 FR 74195, Oct. 25, 2016]

§ 1065.1111 Sample analysis.

This subpart does not specify chromatographic or analytical methods to analyze extracts, because the appropriateness of such methods is highly dependent on the nature of the target analytes. However, we recommend that you spike the extract with an injection standard that contains a known mass of an isotopically labeled compound that is identical to one of the target analytes (except for labeling). This injection standard allows you to monitor the efficiency of the analytical process by verifying the volume of sample injected for analysis.

PART 1066—VEHICLE-TESTING PROCEDURES

Subpart A—Applicability and General Provisions

Sec.
1066.1 Applicability.
1066.2 Submitting information to EPA under this part.
1066.5 Overview of this part 1066 and its relationship to the standard-setting part.
1066.10 Other procedures.
1066.15 Overview of test procedures.
1066.20 Units of measure and overview of calculations.
1066.25 Recordkeeping.

Subpart B—Equipment, Measurement Instruments, Fuel, and Analytical Gas Specifications

1066.101 Overview.
1066.105 Ambient controls and vehicle cooling fans.
1066.110 Equipment specifications for emission sampling systems.
1066.120 Measurement instruments.
1066.125 Data updating, recording, and control.
1066.130 Measurement instrument calibrations and verifications.
1066.135 Linearity verification.
1066.140 Diluted exhaust flow calibration.
1066.145 Test fuel, engine fluids, analytical gases, and other calibration standards.
1066.150 Analyzer interference and quench verification limit.

Subpart C—Dynamometer Specifications

1066.201 Dynamometer overview.

1066.210 Dynamometers.
1066.215 Summary of verification procedures for chassis dynamometers.
1066.220 Linearity verification for chassis dynamometer systems.
1066.225 Roll runout and diameter verification procedure.
1066.230 Time verification procedure.
1066.235 Speed verification procedure.
1066.240 Torque transducer verification.
1066.245 Response time verification.
1066.250 Base inertia verification.
1066.255 Parasitic loss verification.
1066.260 Parasitic friction compensation evaluation.
1066.265 Acceleration and deceleration verification.
1066.270 Unloaded coastdown verification.
1066.275 Daily dynamometer readiness verification.
1066.290 Verification of speed accuracy for the driver's aid.

Subpart D—Coastdown

1066.301 Overview of road-load determination procedures.
1066.305 Procedures for specifying road-load forces for motor vehicles at or below 14,000 pounds GVWR.
1066.310 Coastdown procedures for vehicles above 14,000 pounds GVWR.
1066.315 Dynamometer road-load setting.

Subpart E—Preparing Vehicles and Running an Exhaust Emission Test

1066.401 Overview.
1066.405 Vehicle preparation and preconditioning.
1066.410 Dynamometer test procedure.
1066.415 Vehicle operation.
1066.420 Test preparation.
1066.425 Performing emission tests.

Subpart F—Electric Vehicles and Hybrid Electric Vehicles

1066.501 Overview.

Subpart G—Calculations

1066.601 Overview.
1066.605 Mass-based and molar-based exhaust emission calculations.
1066.610 Dilution air background correction.
1066.615 NO_X intake-air humidity correction.
1066.625 Flow meter calibration calculations.
1066.630 PDP, SSV, and CFV flow rate calculations.
1066.635 NMOG determination.
1066.695 Data requirements.

Subpart H—Cold Temperature Test Procedures

1066.701 Applicability and general provisions.
1066.710 Cold temperature testing procedures for measuring CO and NMHC emissions and determining fuel economy.

Subpart I—Exhaust Emission Test Procedures for Motor Vehicles

1066.801 Applicability and general provisions.
1066.805 Road-load power, test weight, and inertia weight class determination.
1066.810 Vehicle preparation.
1066.815 Exhaust emission test procedures for FTP testing.
1066.816 Vehicle preconditioning for FTP testing.
1066.820 Composite calculations for FTP exhaust emissions.
1066.830 Supplemental Federal Test Procedures; overview.
1066.831 Exhaust emission test procedures for aggressive driving.
1066.835 Exhaust emission test procedure for SC03 emissions.
1066.840 Highway fuel economy test procedure.
1066.845 AC17 air conditioning efficiency test procedure.

Subpart J—Evaporative Emission Test Procedures

1066.901 Applicability and general provisions.
Test Equipment and Calculations for Evaporative and Refueling Emissions
1066.910 SHED enclosure specifications.
1066.915 Enclosures; auxiliary systems and equipment.
1066.920 Enclosure calibrations.
1066.925 Enclosure calculations for evaporative and refueling emissions.
1066.930 Equipment for point-source measurement of running losses.
Evaporative and Refueling Emission Test Procedures for Motor Vehicles
1066.950 Fuel temperature profile.
1066.955 Diurnal emission test.
1066.960 Running loss test.
1066.965 Hot soak test.
1066.970 Refueling test for liquid fuels.
1066.971 Vehicle and canister preconditioning for the refueling test.
1066.975 Refueling test for LPG.
1066.980 Fuel dispensing spitback procedure.
1066.985 Fuel storage system leak test procedure.

Subpart K—Definitions and Other Reference Material

1066.1001 Definitions.

1066.1005 Symbols, abbreviations, acronyms, and units of measure.
1066.1010 Incorporation by reference.

AUTHORITY: 42 U.S.C. 7401–7671q.

SOURCE: 79 FR 23823, Apr. 28, 2014, unless otherwise noted.

Subpart A—Applicability and General Provisions

§ 1066.1 Applicability.

(a) This part describes the emission measurement procedures that apply to testing we require for the following vehicles:

(1) Model year 2014 and later heavy-duty highway vehicles we regulate under 40 CFR part 1037 that are not subject to chassis testing for exhaust emissions under 40 CFR part 86.

(2) Model year 2022 and later motor vehicles (light-duty and heavy-duty) that are subject to chassis testing for exhaust emissions under 40 CFR part 86, other than highway motorcycles. See 40 CFR part 86 for provisions describing how to implement this part 1066.

(b) The procedures of this part may apply to other types of vehicles, as described in this part and in the standard-setting part.

(c) The testing in this part 1066 is designed for measuring exhaust, evaporative, and refueling emissions. Procedures for measuring evaporative and refueling emissions for motor vehicles are in some cases integral with exhaust measurement procedures as described in § 1066.801. Subpart J of this part describes provisions that are unique to evaporative and refueling emission measurements. Other subparts in this part are written with a primary focus on measurement of exhaust emissions.

(d) The term ''you'' means anyone performing testing under this part other than EPA.

(1) This part is addressed primarily to manufacturers of vehicles, but it applies equally to anyone who does testing under this part for such manufacturers.

(2) This part applies to any manufacturer or supplier of test equipment, instruments, supplies, or any other goods or services related to the procedures, requirements, recommendations, or options in this part.

(e) Paragraph (a) of this section identifies the parts of the CFR that define emission standards and other requirements for particular types of vehicles. In this part, we refer to each of these other parts generically as the ''standard-setting part.'' For example, 40 CFR part 1037 is the standard-setting part for heavy-duty highway vehicles and parts 86 and 600 are the standard-setting parts for light-duty vehicles. For vehicles subject to 40 CFR part 86, subpart S, treat subpart I and subpart J of this part as belonging to 40 CFR part 86. This means that references to the standard-setting part include subpart I and subpart J of this part.

(f) Unless we specify otherwise, the terms ''procedures'' and ''test procedures'' in this part include all aspects of vehicle testing, including the equipment specifications, calibrations, calculations, and other protocols and procedural specifications needed to measure emissions.

(g) For additional information regarding these test procedures, visit our Web site at *www.epa.gov*, and in particular *http://www.epa.gov/nvfel/testing/regulations.htm*.

EFFECTIVE DATE NOTE: At 86 FR 34581, June 29, 2021, § 1066.1 was amended, effective July 29, 2021.

§ 1066.2 Submitting information to EPA under this part.

(a) You are responsible for statements and information in your applications for certification, requests for approved procedures, selective enforcement audits, laboratory audits, production-line test reports, or any other statements you make to us related to this part 1066. If you provide statements or information to someone for submission to EPA, you are responsible for these statements and information as if you had submitted them to EPA yourself.

(b) In the standard-setting part and in 40 CFR 1068.101, we describe your obligation to report truthful and complete information and the consequences of failing to meet this obligation. See also 18 U.S.C. 1001 and 42 U.S.C. 7413(c)(2). This obligation applies whether you submit this information directly to EPA or through someone else.

(c) We may void any certificates or approvals associated with a submission of information if we find that you intentionally submitted false, incomplete, or misleading information. For example, if we find that you intentionally submitted incomplete information to mislead EPA when requesting approval to use alternate test procedures, we may void the certificates for all engine families certified based on emission data collected using the alternate procedures. This would also apply if you ignore data from incomplete tests or from repeat tests with higher emission results.

(d) We may require an authorized representative of your company to approve and sign the submission, and to certify that all the information submitted is accurate and complete. This includes everyone who submits information, including manufacturers and others.

(e) See 40 CFR 1068.10 for provisions related to confidential information. Note however that under 40 CFR 2.301, emission data are generally not eligible for confidential treatment.

(f) Nothing in this part should be interpreted to limit our ability under Clean Air Act section 208 (42 U.S.C. 7542) to verify that vehicles conform to the regulations.

§ 1066.5 Overview of this part 1066 and its relationship to the standard-setting part.

(a) This part specifies procedures that can apply generally to testing various categories of vehicles. See the standard-setting part for directions in applying specific provisions in this part for a particular type of vehicle. Before using this part's procedures, read the standard-setting part to answer at least the following questions:

(1) What drive schedules must I use for testing?

(2) Should I warm up the test vehicle before measuring emissions, or do I need to measure cold-start emissions during a warm-up segment of the duty cycle?

(3) Which exhaust constituents do I need to measure? Measure all exhaust constituents that are subject to emission standards, any other exhaust constituents needed for calculating emission rates, and any additional exhaust constituents as specified in the standard-setting part. See 40 CFR 1065.5 regarding requests to omit measurement of N_2O and CH_4 for vehicles not subject to an N_2O or CH_4 emission standard.

(4) Do any unique specifications apply for test fuels?

(5) What maintenance steps may I take before or between tests on an emission-data vehicle?

(6) Do any unique requirements apply to stabilizing emission levels on a new vehicle?

(7) Do any unique requirements apply to test limits, such as ambient temperatures or pressures?

(8) What requirements apply for evaporative and refueling emissions?

(9) Are there any emission standards specified at particular operating conditions or ambient conditions?

(10) Do any unique requirements apply for durability testing?

(b) The testing specifications in the standard-setting part may differ from the specifications in this part. In cases where it is not possible to comply with both the standard-setting part and this part, you must comply with the specifications in the standard-setting part. The standard-setting part may also allow you to deviate from the procedures of this part for other reasons.

(c) The following table shows how this part divides testing specifications into subparts:

TABLE 1 OF § 1066.5—DESCRIPTION OF PART 1066 SUBPARTS

This subpart	Describes these specifications or procedures
Subpart A	Applicability and general provisions.
Subpart B	Equipment for testing.
Subpart C	Dynamometer specifications.
Subpart D	Coastdowns for testing.
Subpart E	How to prepare your vehicle and run an emission test.
Subpart F	How to test electric vehicles and hybrid electric vehicles.
Subpart G	Test procedure calculations.
Subpart H	Cold temperature testing.
Subpart I	Exhaust emission test procedures for motor vehicles.
Subpart J	Evaporative and refueling emission test procedures.
Subpart K	Definitions and reference material.

§ 1066.10 Other procedures.

(a) *Your testing*. The procedures in this part apply for all testing you do to

show compliance with emission standards, with certain exceptions noted in this section. In some other sections in this part, we allow you to use other procedures (such as less precise or less accurate procedures) if they do not affect your ability to show that your vehicles comply with the applicable emission standards. This generally requires emission levels to be far enough below the applicable emission standards so that any errors caused by greater imprecision or inaccuracy do not affect your ability to state unconditionally that the engines meet all applicable emission standards.

(b) *Our testing*. These procedures generally apply for testing that we do to determine if your vehicles comply with applicable emission standards. We may perform other testing as allowed by the Act.

(c) *Exceptions*. You may use procedures other than those specified in this part as described in 40 CFR 1065.10(c). All the test procedures noted as exceptions to the specified procedures are considered generically as ''other procedures.'' Note that the terms ''special procedures'' and ''alternate procedures'' have specific meanings; ''special procedures'' are those allowed by 40 CFR 1065.10(c)(2) and ''alternate procedures'' are those allowed by 40 CFR 1065.10(c)(7). If we require you to request approval to use other procedures under this paragraph (c), you may not use them until we approve your request.

[79 FR 23823, Apr. 28, 2014, 80 FR 9120, Feb. 19, 2015]

§ 1066.15 Overview of test procedures.

This section outlines the procedures to test vehicles that are subject to emission standards.

(a) The standard-setting part describes the emission standards that apply. Evaporative and refueling emissions are generally in the form of grams total hydrocarbon equivalent per test. We set exhaust emission standards in g/mile (or g/km), for the following constituents:

(1) Total oxides of nitrogen, NO_X.

(2) Hydrocarbons, HC, which may be expressed in the following ways:

(i) Total hydrocarbons, THC.

(ii) Nonmethane hydrocarbons, NMHC, which results from subtracting methane, CH_4, from THC.

(iii) Total hydrocarbon-equivalent, THCE, which results from adjusting THC mathematically to be equivalent on a carbon-mass basis.

(iv) Nonmethane hydrocarbon-equivalent, NMHCE, which results from adjusting NMHC mathematically to be equivalent on a carbon-mass basis.

(v) Nonmethane organic gases, NMOG, which are calculated either from fully or partially speciated measurement of hydrocarbons including oxygenates, or by adjusting measured NMHC values based on fuel oxygenate properties.

(3) Particulate matter, PM.

(4) Carbon monoxide, CO.

(5) Carbon dioxide, CO_2.

(6) Methane, CH_4.

(7) Nitrous oxide, N_2O.

(8) Formaldehyde, CH_2O.

(b) Note that some vehicles may not be subject to standards for all the exhaust emission constituents identified in paragraph (a) of this section. Note also that the standard-setting part may include standards for pollutants not listed in paragraph (a) of this section.

(c) The provisions of this part apply for chassis dynamometer testing where vehicle speed is controlled to follow a prescribed duty cycle while simulating vehicle driving through the dynamometer's road-load settings. We generally set exhaust emission standards over test intervals and/or drive schedules, as follows:

(1) *Vehicle operation*. Testing involves measuring emissions and miles travelled while operating the vehicle on a chassis dynamometer. Refer to the definitions of ''duty cycle'' and ''test interval'' in § 1066.1001. Note that a single drive schedule may have multiple test intervals and require weighting of results from multiple test intervals to calculate a composite distance-based emission value to compare to the standard.

(2) *Constituent determination*. Determine the total mass of each exhaust constituent over a test interval by selecting from the following methods:

(i) *Continuous sampling*. In continuous sampling, measure the exhaust constituent's concentration continuously from raw or dilute exhaust. Multiply this concentration by the continuous (raw or dilute) flow rate at the emission sampling location to determine the constituent's flow rate. Sum the constituent's flow rate continuously over the test interval. This sum is the total mass of the emitted constituent.

(ii) *Batch sampling*. In batch sampling, continuously extract and store a sample of raw or dilute exhaust for later measurement. Extract a sample proportional to the raw or dilute exhaust flow rate, as applicable. You may extract and store a proportional sample of exhaust in an appropriate container, such as a bag, and then measure NO_X, HC, CO, CO_2, CH_4, N_2O, and CH_2O concentrations in the container after the test interval. You may deposit PM from proportionally extracted exhaust onto an appropriate substrate, such as a filter. In this case, divide the PM by the amount of filtered exhaust to calculate the PM concentration. Multiply batch sampled concentrations by the total (raw or dilute) flow from which it was extracted during the test interval. This product is the total mass of the emitted constituent.

(iii) *Combined sampling*. You may use continuous and batch sampling simultaneously during a test interval, as follows:

(A) You may use continuous sampling for some constituents and batch sampling for others.

(B) You may use continuous and batch sampling for a single constituent, with one being a redundant measurement, subject to the provisions of 40 CFR 1065.201.

(d) Refer to subpart G of this part and the standard-setting part for calculations to determine g/mile emission rates.

(e) You must use good engineering judgment for all aspects of testing under this part. While this part highlights several specific cases where good engineering judgment is especially relevant, the requirement to use good engineering judgment is not limited to those provisions where we specifically re-state this requirement.

§ 1066.20 Units of measure and overview of calculations.

(a) *System of units*. The procedures in this part follow both conventional English units and the International System of Units (SI), as detailed in NIST Special Publication 811, which we incorporate by reference in § 1066.1010. Except where specified, equations work with either system of units. Where the equations depend on the use of specific units, the regulation identifies the appropriate units.

(b) *Units conversion*. Use good engineering judgment to convert units between measurement systems as needed. For example, if you measure vehicle speed as kilometers per hour and we specify a precision requirement in terms of miles per hour, convert your measured kilometer per hour value to miles per hour before comparing it to our specification. The following conventions are used throughout this document and should be used to convert units as applicable:

(1) 1 hp = 33,000 ft · lbf/min = 550 ft · lbf/s = 0.7457 kW.

(2) 1 lbf = 32.174 ft · lbm/s^2 = 4.4482 N.

(3) 1 inch = 25.4 mm.

(4) 1 mile = 1609.344 m.

(5) For ideal gases, 1 μmol/mol = 1 ppm.

(6) For ideal gases, 10 mmol/mol = 1%.

(c) *Temperature*. We generally designate temperatures in units of degrees Celsius (°C) unless a calculation requires an absolute temperature. In that case, we designate temperatures in units of Kelvin (K). For conversion purposes throughout this part, 0 °C equals 273.15 K. Unless specified otherwise, always use absolute temperature values for multiplying or dividing by temperature.

(d) *Absolute pressure*. Measure absolute pressure directly or calculate it as the sum of atmospheric pressure plus a differential pressure that is referenced to atmospheric pressure. Always use absolute pressure values for multiplying or dividing by pressure.

(e) *Rounding*. The rounding provisions of 40 CFR 1065.20 apply for calculations in this part. This generally specifies that you round final values but not intermediate values. Use good

engineering judgment to record the appropriate number of significant digits for all measurements.

(f) *Interpretation of ranges.* Interpret a range as a tolerance unless we explicitly identify it as an accuracy, repeatability, linearity, or noise specification. See 40 CFR 1065.1001 for the definition of tolerance. In this part, we specify two types of ranges:

(1) Whenever we specify a range by a single value and corresponding limit values above and below that value (such as X ±Y), target the associated control point to that single value (X). Examples of this type of range include ''±10% of maximum pressure'', or ''(30 ±10) kPa''. In these examples, you would target the maximum pressure or 30 kPa, respectively.

(2) Whenever we specify a range by the interval between two values, you may target any associated control point to any value within that range. An example of this type of range is ''(40 to 50) kPa''.

(g) *Scaling of specifications with respect to an applicable standard.* Because this part 1066 applies to a wide range of vehicles and emission standards, some of the specifications in this part are scaled with respect to a vehicle's applicable standard or weight. This ensures that the specification will be adequate to determine compliance, but not overly burdensome by requiring unnecessarily high-precision equipment. Many of these specifications are given with respect to a ''flow-weighted mean'' that is expected at the standard or during testing. Flow-weighted mean is the mean of a quantity after it is weighted proportional to a corresponding flow rate. For example, if a gas concentration is measured continuously from the raw exhaust of an engine, its flow-weighted mean concentration is the sum of the products of each recorded concentration times its respective exhaust flow rate, divided by the sum of the recorded flow rates. As another example, the bag concentration from a CVS system is the same as the flow-weighted mean concentration, because the CVS system itself flow-weights the bag concentration.

§ 1066.25 Recordkeeping.

(a) The procedures in this part include various requirements to record data or other information. Refer to the standard-setting part and § 1066.695 regarding specific recordkeeping requirements.

(b) You must promptly send us organized, written records in English if we ask for them. We may review them at any time.

(c) We may waive specific reporting or recordkeeping requirements we determine to be unnecessary for the purposes of this part and the standard-setting part. Note that while we will generally keep the records required by this part, we are not obligated to keep records we determine to be unnecessary for us to keep. For example, while we require you to keep records for invalid tests so we may verify that your invalidation was appropriate, it is not necessary for us to keep records for our own invalid tests.

Subpart B—Equipment, Measurement Instruments, Fuel, and Analytical Gas Specifications

§ 1066.101 Overview.

(a) This subpart addresses equipment related to emission testing, as well as test fuels and analytical gases.

(b) The provisions of 40 CFR part 1065 specify engine-based procedures for measuring emissions. Except as specified otherwise in this part, the provisions of 40 CFR part 1065 apply for testing required by this part as follows:

(1) The provisions of 40 CFR part 1065, subpart B, describe equipment specifications for exhaust dilution and sampling systems; these specifications apply for testing under this part as described in § 1066.110.

(2) The provisions of 40 CFR part 1065, subpart C, describe specifications for measurement instruments; these specifications apply for testing under this part as described in § 1066.120.

(3) The provisions of 40 CFR part 1065, subpart D, describe specifications for measurement instrument calibrations and verifications; these specifications apply for testing under this part as described in § 1066.130.

(4) The provisions of 40 CFR part 1065, subpart H, describe specifications for fuels, engine fluids, and analytical gases; these specifications apply for testing under this part as described in § 1066.145.

(5) The provisions of 40 CFR part 1065, subpart I, describe specifications for testing with oxygenated fuels; these specifications apply for NMOG determination as described in § 1066.635.

(c) The provisions of this subpart are intended to specify systems that can very accurately and precisely measure emissions from motor vehicles such as light-duty vehicles. To the extent that this level of accuracy or precision is not necessary for testing highway motorcycles or nonroad vehicles, we may waive or modify the specifications and requirements of this part for testing these other vehicles, consistent with good engineering judgment. For example, it may be appropriate to allow the use of a hydrokinetic dynamometer that is not able to meet all the performance specifications described in this subpart.

§ 1066.105 Ambient controls and vehicle cooling fans.

(a) *Ambient conditions.* Dynamometer testing under this part generally requires that you maintain the test cell within a specified range of ambient temperature and humidity. Use good engineering judgment to maintain relatively uniform temperatures throughout the test cell before testing. You are generally not required to maintain uniform temperatures throughout the test cell while the vehicle is running due to the heat generated by the vehicle. Measured humidity values must represent the conditions to which the vehicle is exposed, which includes intake air; other than the intake air, humidity does not affect emissions, so humidity need not be uniform throughout the test cell.

(b) *General requirements for cooling fans.* Use good engineering judgment to select and configure fans to cool the test vehicle in a way that meets the specifications of paragraph (c) of this section and simulates in-use operation. If you demonstrate that the specified fan configuration is impractical for special vehicle designs, such as vehicles with rear-mounted engines, or it does not provide adequate cooling to properly represent in-use operation, you may ask us to approve increasing fan capacity or using additional fans.

(c) *Allowable cooling fans for vehicles at or below 14,000 pounds GVWR.* Cooling fan specifications for vehicles at or below 14,000 pounds GVWR depend on the test cycle. Paragraph (c)(1) of this section summarizes the cooling fan specifications for the different test cycles; the detailed specifications are described in paragraphs (c)(2) through (5) of this section. See § 1066.410 for instruction regarding how to use the fans during testing.

(1) Cooling fan specifications for different test cycles are summarized as follows:

(i) For the FTP test cycle, the allowable cooling fan configurations are described in paragraphs (c)(2) and (3) of this section.

(ii) For the HFET test cycle, the allowable cooling fan configurations are described in paragraphs (c)(2) and (3) of this section.

(iii) For the US06 test cycle, the allowable cooling fan configurations are described in paragraphs (c)(2) and (4) of this section.

(iv) For the LA–92 test cycle, the allowable cooling fan configurations are described in paragraphs (c)(2) and (4) of this section.

(v) For SC03 and AC17 test cycles, the allowable cooling fan configuration is described in paragraph (c)(5) of this section.

(2) You may use a road-speed modulated fan system meeting the specifications of this paragraph (c)(2) for anything other than SC03 and AC17 testing. Use a road-speed modulated fan that achieves a linear speed of cooling air at the blower outlet that is within ±3.0 mi/hr (±1.3 m/s) of the corresponding roll speed when vehicle speeds are between 5 and 30 mi/hr, and within ±6.5 mi/hr (±2.9 m/s) of the corresponding roll speed at higher vehicle speeds; however you may limit the fan's maximum linear speed to 70 mi/hr. We recommend that the cooling fan have a minimum opening of 0.2 m^2 and a minimum width of 0.8 m.

(i) Verify the air flow velocity for fan speeds corresponding to vehicle speeds

of 20 and 40 mi/hr using an instrument that has an accuracy of ±2% of the measured air flow speed.

(ii) For fans with rectangular outlets, divide the fan outlet into sections as shown in Figure 1 of this section. As illustrated by the '' + '' in the following figure, measure flow from the center of each section; do not measure the flow from the center section.

Figure 1 of § 1066.105—Rectangular fan outlet grid

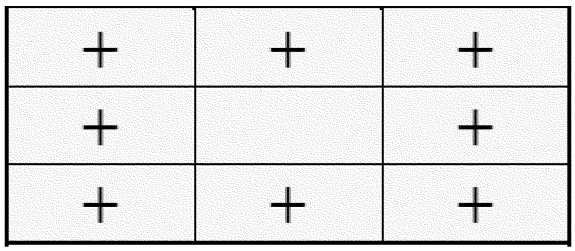

(iii) For fans with circular outlets, divide the fan outlet into 8 equal sections as shown in Figure 2 of this section. As illustrated by the '' + '' in the following figure, measure flow on the radial centerline of each section, at a radius of two-thirds of the fan's total radius.

Figure 2 of § 1066.105—Circular fan outlet grid

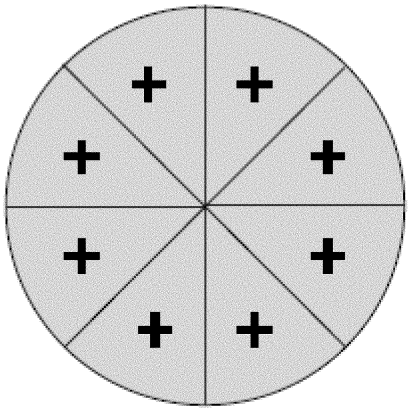

(iv) Verify that the uniformity of the fan's axial flow is constant across the discharge area within a tolerance of ±4.0 mi/hr of the vehicle's speed at fan speeds corresponding to 20 mi/hr, and within ±8.0 mi/hr at fan speeds corresponding to 40 mi/hr. For example, at a vehicle speed of 20.2 mi/hr, axial flow at all locations denoted by the ''+'' across the discharge nozzle must be between 16.2 and 24.2 mi/hr. When measuring the axial air flow velocity, use good engineering judgment to determine the distance from the nozzle outlet at each point of the fan outlet grid. Use these values to calculate a mean

air flow velocity across the discharge area at each speed setting. The instrument used to verify the air velocity must have an accuracy of ±2% of the measured air flow velocity.

(v) Use a multi-axis flow meter or another method to verify that the fan's air flow perpendicular to the axial air flow is less than 15% of the axial air flow, consistent with good engineering judgment. Demonstrate this by comparing the perpendicular air flow velocity to the mean air flow velocities determined in paragraph (c)(2)(iv) of this section at vehicle speeds of 20 and 40 mi/hr.

(3) You may use a fixed-speed fan with a maximum capacity up to 2.50 m^3/s for FTP and HFET testing.

(4) You may use a fixed-speed fan with a maximum capacity up to 7.10 m^3/s for US06 and LA–92 testing.

(5) For SC03 and AC17 testing, use a road-speed modulated fan with a minimum discharge area that is equal to or exceeds the vehicle's frontal inlet area. We recommend using a fan with a discharge area of 1.7 m^2.

(i) Air flow volumes must be proportional to vehicle speed. Select a fan size that will produce a flow volume of approximately 45 m^3/s at 60 mi/hr. If this fan is also the only source of test cell air circulation or if fan operational mechanics make the 0 mi/hr air flow requirement impractical, air flow of 2 mi/hr or less at 0 mi/hr vehicle speed is allowed.

(ii) Verify the uniformity of the fan's axial flow as described in paragraph (c)(2)(iv) of this section, except that you must measure the axial air flow velocity 60 cm from the nozzle outlet at each point of the discharge area grid.

(iii) Use a multi-axis flow meter or another method to verify that the fan's air flow perpendicular to the axial air flow is less than 10% of the axial air flow, consistent with good engineering judgment. Demonstrate this by comparing the perpendicular air flow velocity to the mean air flow velocities determined in paragraph (c)(2)(iv) of this section at vehicle speeds of 20 and 40 mi/hr.

(iv) In addition to the road-speed modulated fan, we may approve the use of one or more fixed-speed fans to provide proper cooling to represent in-use operation, but only up to a total of 2.50 m^3/s for all additional fans.

(d) *Allowable cooling fans for vehicles above 14,000 pounds GVWR.* For all testing, use a road-speed modulated fan system that achieves a linear speed of cooling air at the blower outlet that is within ±3.0 mi/hr (±1.3 m/s) of the corresponding roll speed when vehicle speeds are between 5 and 30 mi/hr, and within ±10 mi/hr (±4.5 m/s) of the corresponding roll speed at higher vehicle speeds. For vehicles above 19,500 pounds GVWR, we recommend that the cooling fan have a minimum opening of 2.75 m^2, a minimum flow rate of 60 m^3/s at a fan speed of 50 mi/hr, and a minimum speed profile in the free stream flow, across the duct that is ±15% of the target flow rate.

[79 FR 23823, Apr. 28, 2014, as amended at 81 FR 74195, Oct. 25, 2016]

§ 1066.110 Equipment specifications for emission sampling systems.

(a) This section specifies equipment related to emission testing, other than measurement instruments. This equipment includes dynamometers (described further in subpart C of this part) and various emission-sampling hardware.

(b) The following equipment specifications apply for testing under this part:

(1) Connect a vehicle's exhaust system to any dilution stage as follows:

(i) Minimize lengths of laboratory exhaust tubing. You may use a total length of laboratory exhaust tubing up to 4 m without needing to heat or insulate the tubing. However, you may use a total length of laboratory exhaust tubing up to 10 m, or up to 15 m for samples not involving PM measurement, if you insulate and/or heat the tubing to minimize the temperature difference between the exhaust gas and the whole tubing wall over the course of the emission test. The laboratory exhaust tubing starts at the end of the vehicle's tailpipe and ends at the first sample point or the first dilution point. The laboratory exhaust tubing may include flexible sections, but we recommend that you limit the amount of

flexible tubing to the extent practicable. For multiple-tailpipe configurations where the tailpipes combine into a single flow path for emission sampling, the start of the laboratory exhaust tubing may be taken at the last joint where the exhaust flow first becomes a single, combined flow.

(ii) For vehicles above 14,000 pounds GVWR, you may shorten the tailpipe up to the outlet of the last aftertreatment device or silencer, whichever is furthest downstream.

(iii) You may insulate or heat any laboratory exhaust tubing.

(iv) Use laboratory exhaust tubing materials that are smooth-walled and not chemically reactive with exhaust constituents. (For purposes of this paragraph (b)(1), nominally smooth spiral-style and accordion-style flexible tubing are considered to be smooth-walled.) For measurements involving PM, tubing materials must also be electrically conductive. Stainless steel is an acceptable material for any testing. You may use short sections of nonconductive flexible tubing to connect a PM sampling system to the vehicle's tailpipe; use good engineering judgment to limit the amount of nonconductive surface area exposed to the vehicle's exhaust.

(v) We recommend that you use laboratory exhaust tubing that has either a wall thickness of less than 2 mm or is air gap-insulated to minimize temperature differences between the wall and the exhaust.

(vi) You must seal your system to the extent necessary to ensure that any remaining leaks do not affect your ability to demonstrate compliance with the applicable standards. We recommend that you seal all known leaks.

(vii) Electrically ground the entire exhaust system, with the exception of nonconductive flexible tubing, as allowed under paragraph (b)(1)(iv) of this section.

(viii) For vehicles with multiple tailpipes, route the exhaust into a single flow. To ensure mixing of the multiple exhaust streams before emission sampling, we recommend a minimum Reynolds number, $Re^{\#}$, of 4000 for the combined exhaust stream, where $Re^{\#}$ is based on the inside diameter of the combined flow at the first sampling point. You may configure the exhaust system with turbulence generators, such as orifice plates or fins, to achieve good mixing; this may be necessary for good mixing if $Re^{\#}$ is less than 4000. $Re^{\#}$ is defined in 40 CFR 1065.640.

(2) Use equipment specifications in 40 CFR 1065.140 through 40 CFR 1065.190, except as follows:

(i) For PM background measurement, the following provisions apply instead of the analogous provisions in 40 CFR 1065.140(b):

(A) You need not measure PM background for every test. You may apply PM background correction for a single site or multiple sites using a moving-average background value as long as your background PM sample media (e.g., filters) were all made by the same manufacturer from the same material. Use good engineering judgment to determine how many background samples make up the moving average and how frequently to update those values. For example, you might take one background sample per week and average that sample into previous background values, maintaining five observations for each calculated average value. Background sampling time should be representative of the duration of the test interval to which the background correction is applied.

(B) You may sample background PM from the dilution tunnel at any time before or after an emission test using the same sampling system used during the emission test. For this background sampling, the dilution tunnel blower must be turned on, the vehicle must be disconnected from the laboratory exhaust tubing, and the laboratory exhaust tubing must be capped. You may run this PM blank test in combination with the dilute exhaust flow verification (propane check) in 40 CFR 1065.341, as long as the exhaust tubing inlet to the CVS has a filter meeting the requirements of 40 CFR 1065.140(b)(3).

(C) The duration of your background sample may be different than that of the test cycle in which you are applying the background correction, consistent with good engineering judgment.

(D) Your PM background correction may not exceed 5 μg or 5% of the net

PM mass expected at the standard, whichever is greater.

(ii) The provisions of 40 CFR 1065.140(d)(2)(iv) do not apply.

(iii) For PM samples, configure dilution systems using the following limits:

(A) Control the dilution air temperature as described in 40 CFR 1065.140(e)(1), except that the temperature may be set to (15 to 52) °C. Use good engineering judgment to control PM sample temperature as required under 40 CFR 1065.140(e)(4).

(B) Apply the provisions of this paragraph (b)(2)(iii)(B) instead of 40 CFR 1065.140(e)(2). Add dilution air to the raw exhaust such that the overall dilution factor of diluted exhaust to raw exhaust, as shown in Eq. 1066.610–2 or 1066.610–3, is within the range of (7:1 to 20:1). Compliance with this dilution factor range may be determined for an individual test interval or as a time-weighted average over the entire duty cycle as determined in Eq. 1066.610–4. The maximum dilution factor limit of 20:1 does not apply for hybrid electric vehicles (HEVs), since the dilution factor is infinite when the engine is off; however we strongly recommend that you stay under the specified maximum dilution factor limit when the engine is running. For partial-flow sampling systems, determine dilution factor using Eq. 1066.610–3. To determine the overall dilution factor for PM samples utilizing secondary dilution air, multiply the dilution factor from the CVS by the dilution ratio of secondary dilution air to primary diluted exhaust.

(C) You may use a higher target filter face velocity as specified in 40 CFR 1065.170(c)(1)(vi), up to 140 cm/s, if you need to increase filter loading for PM measurement.

(iv) In addition to the allowances in 40 CFR 1065.140(c)(6), you may heat the dilution air as described in paragraph (b)(2)(iii)(A) of this section to prevent or limit aqueous condensation.

(v) If you choose to dilute the exhaust by using a remote mix tee, which dilutes the exhaust at the tailpipe, you may use the following provisions consistent with good engineering judgment, as long as they do not affect your ability to demonstrate compliance with the applicable standards:

(A) You may use smooth-walled flexible tubing (including accordion-style) in the dilution tunnel upstream of locations for flow measurement or gaseous emission measurement.

(B) You may use smooth-walled electrically conductive flexible tubing in the dilution tunnel upstream of the location for PM emission measurements.

(C) All inside surfaces upstream of emission sampling must be made of 300 series stainless steel or polymer-based materials.

(D) Use good engineering judgment to ensure that the materials you choose do not cause significant loss of PM from your sample.

(vi) Paragraph (b)(1)(vi) of this section applies instead of 40 CFR 1065.145(b).

(vii) Vehicles other than HEVs that apply technology involving engine shutdown during idle may apply the sampling provisions of § 1066.501(c).

(c) The following table summarizes the requirements of paragraph (b)(2) of this section:

TABLE 1 OF § 1066.110—SUMMARY OF EQUIPMENT SPECIFICATIONS FROM 40 CFR PART 1065, SUBPART B, THAT APPLY FOR CHASSIS TESTING

40 CFR part 1065 references	Applicability for chassis testing under this part
40 CFR 1065.140	Use all except as noted: 40 CFR 1065.140(b) applies as described in this section. Use 40 CFR 1065.140(c)(6), with the additional allowance described in this section. Do not use 40 CFR 1065.140(d)(2)(iv). Use 40 CFR 1065.140(e)(1) as described in this section. Do not use 40 CFR 1065.140(e)(2).
40 CFR 1065.145	Use all except 40 CFR 1065.145(b).
40 CFR 1065.150	Use all.
40 CFR 1065.170	Use all except as noted: Use 40 CFR 1065.170(c)(1)(vi) as described in this section.
40 CFR 1065.190	Use all.

[79 FR 23823, Apr. 28, 2014, as amended at 81 FR 74196, Oct. 25, 2016]

§ 1066.120 Measurement instruments.

The measurement instrument requirements in 40 CFR part 1065, subpart C, apply with the following exceptions:

(a) The provisions of § 1066.125 apply instead of 40 CFR 1065.202.

(b) The provisions of 40 CFR 1065.210 and 1065.295 do not apply.

§ 1066.125 Data updating, recording, and control.

This section specifies criteria that your test system must meet for updating and recording data. It also specifies criteria for controlling the systems related to driver demand, the dynamometer, sampling equipment, and measurement instruments.

(a) Read and record values and calculate mean values relative to a specified frequency as follows:

(1) This paragraph (a)(1) applies where we specify a minimum command and control frequency that is greater than the minimum recording frequency, such as for sample flow rates from a CVS that does not have a heat exchanger. For these measurements, the rate at which you read and interpret the signal must be at least as frequent as the minimum command and control frequency. You may record values at the same frequency, or you may record them as mean values, as long as the frequency of the mean values meets the minimum recording frequency. You must use all read values, either by recording them or using them to calculate mean values. For example, if your system reads and controls the sample flow rate at 10 Hz, you may record these values at 10 Hz, record them at 5 Hz by averaging pairs of consecutive points together, or record them at 1 Hz by averaging ten consecutive points together.

(2) For all other measured values covered by this section, you may record the values instantaneously or as mean values, consistent with good engineering judgment.

(3) You may not use rolling averages of measured values where a given measured value is included in more than one recorded mean value.

(b) Use data acquisition and control systems that can command, control, and record at the following minimum frequencies:

TABLE 1 OF § 1066.125—DATA RECORDING AND CONTROL MINIMUM FREQUENCIES

Applicable section	Measured values	Minimum command and control frequency [a]	Minimum recording frequency [b c]
§ 1066.310 § 1066.315	Vehicle speed		10 Hz.
§ 1066.425	Continuous concentrations of raw or dilute analyzers.		1 Hz.
§ 1066.425 § 1066.501	Power analyzer		1 Hz.
§ 1066.425	Bag concentrations of raw or dilute analyzers		1 mean value per test interval.
40 CFR 1065.545 § 1066.425	Diluted exhaust flow rate from a CVS with a heat exchanger upstream of the flow measurement.		1 Hz.
40 CFR 1065.545 § 1066.425	Diluted exhaust flow rate from a CVS without a heat exchanger upstream of the flow measurement.	5 Hz	1 Hz means.
40 CFR 1065.545 § 1066.425	Dilution air flow if actively controlled (for example, a partial-flow PM sampling system) [d].	5 Hz	1 Hz means.
40 CFR 1065.545 § 1066.425	Sample flow from a CVS that has a heat exchanger	1 Hz	1 Hz.
40 CFR 1065.545 § 1066.425	Sample flow from a CVS that does not have a heat exchanger.	5 Hz	1 Hz means.
§ 1066.420	Ambient temperature		1 Hz.[e]
§ 1066.420	Ambient humidity		1 Hz.[e]
§ 1066.420	Heated sample system temperatures, including PM filter face.		1 Hz.

[a] CFVs that are not using active control are exempt from meeting this requirement due to their operating principle.

[b] 1 Hz means are data reported from the instrument at a higher frequency, but recorded as a series of 1 s mean values at a rate of 1 Hz.

[c] For CFVs in a CVS, the minimum recording frequency is 1 Hz. For CFVs used to control sampling from a CFV CVS, the minimum recording frequency is not applicable.

[d] This is not applicable to CVS dilution air.

[e] Unless specified elsewhere in this part or the standard-setting part. Note that this provision does not apply to soak periods where recording frequencies are not specified. For these instances, we recommend a recording frequency of ≥0.016 Hz.

[79 FR 23823, Apr. 28, 2014, as amended at 80 FR 9120, Feb. 19, 2015]

§ 1066.130 Measurement instrument calibrations and verifications.

The measurement instrument calibration and verification requirements in 40 CFR part 1065, subpart D, apply with the following exceptions:

(a) The calibration and verification provisions of 40 CFR 1065.303 do not apply for engine speed, torque, fuel rate, or intake air flow.

(b) The linearity verification provisions of 40 CFR 1065.307 do not apply for engine speed, torque, fuel rate, or intake air flow. Section 1066.135 specifies additional linearity verification provisions that apply specifically for chassis testing.

(c) The provisions of § 1066.220 apply instead 40 CFR 1065.310.

(d) The provisions of 40 CFR 1065.320, 1065.325, and 1065.395 do not apply.

(e) If you are measuring flow volumetrically (rather than measuring based on molar values), the provisions of § 1066.140 apply instead of 40 CFR 1065.340.

(f) The provisions of § 1066.150 apply instead 40 CFR 1065.350(c), 1065.355(c), 1065.370(c), and 1065.375(c).

(g) Table 1 of this section summarizes the required and recommended calibrations and verifications that are unique to testing under this part and indicates when these must be performed. Perform other required or recommended calibrations and verifications as described in 40 CFR 1065.303, with the exceptions noted in this section. Table 1 follows:

TABLE 1 OF § 1066.130—SUMMARY OF REQUIRED CALIBRATIONS AND VERIFICATIONS

Type of calibration or verification	Minimum frequency [a]
40 CFR 1065.307: Linearity verification.	The linearity verifications from 40 CFR part 1065 do not apply under this part for engine speed, torque, fuel rate, or intake air flow; the linearity verification described in § 1066.135 applies for the following measurements: Dynamometer speed: See § 1066.220. Dynamometer torque: See § 1066.220.
40 CFR 1065.310: Torque	This calibration does not apply for testing under this part; see § 1066.220.
40 CFR 1065.320: Fuel flow	This calibration does not apply for testing under this part.
40 CFR 1065.325: Intake flow	This calibration does not apply for testing under this part.
40 CFR 1065.340: CVS calibration.	This calibration does not apply for CVS flow meters calibrated volumetrically as described in § 1066.140.
40 CFR 1065.345: Vacuum leak.	Required upon initial installation of the sampling system; recommended within 35 days before the start of an emissions test and after maintenance such as pre-filter changes.
40 CFR 1065.350(c), 1065.355(c), 1065.370(c), and 1065.375(c).	These provisions do not apply for testing under this part; see § 1066.150.
40 CFR 1065.395: Inertial PM balance and weighing.	These verifications do not apply for testing under this part.

[a] Perform calibrations and verifications more frequently if needed to conform to the measurement system manufacturer's instructions and good engineering judgment.

§ 1066.135 Linearity verification.

This section describes requirements for linearity verification that are unique to testing under this part. (Note: See the definition of ''linearity'' in 40 CFR 1065.1001, where we explain that linearity means the degree to which measured values agree with respective reference values and that the term ''linearity'' is not used to refer to the shape of a measurement instrument's unprocessed response curve.) Perform other required or recommended calibrations and verifications as described in 40 CFR 1065.307, with the exceptions noted in this section.

(a) For gas analyzer linearity, use one of the following options:

(1) Use instrument manufacturer recommendations and good engineering judgment to select at least ten reference values, y_{refi}, that cover the range of values that you expect during testing (to prevent extrapolation beyond the verified range during emission testing). We recommend selecting zero as one of your reference values. For each range calibrated, if the deviation from a least-squares best-fit straight line is 2% or less of the value at each data

point, concentration values may be calculated by use of a straight-line curve fit for that range. If the deviation exceeds 2% at any point, use the best-fit nonlinear equation that represents the data to within 2% of each test point to determine concentration. If you use a gas divider to blend calibration gases, verify that the calibration curve produced names a calibration gas within 2% of its certified concentration. Perform this verification between 15 and 50% of the full-scale analyzer range.

(2) Use the linearity requirements of 40 CFR 1065.307, except for CO_2 measurements used for determining fuel economy and GHG emissions for motor vehicles at or below 14,000 pounds GVWR. If you choose this linearity option, you must use the provisions of 40 CFR 1065.672 to check for drift and make appropriate drift corrections.

(b) For dilution air, diluted exhaust, and raw exhaust sample flow, use a reference flow meter with a blower or pump to simulate flow rates. Use a restrictor, diverter valve, variable-speed blower, or variable-speed pump to control the range of flow rates. Use the reference meter's response for the reference values.

(1) *Reference flow meters.* Because of the large range in flow requirements, we allow a variety of reference meters. For example, for diluted exhaust flow for a full-flow dilution system, we recommend a reference subsonic venturi flow meter with a restrictor valve and a blower to simulate flow rates. For dilution air, diluted exhaust for partial-flow dilution, and raw exhaust, we allow reference meters such as critical flow orifices, critical flow venturis, laminar flow elements, master mass flow standards, or Roots meters. Make sure the reference meter is calibrated and its calibration is NIST-traceable. If you use the difference of two flow measurements to determine a net flow rate, you may use one of the measurements as a reference for the other.

(2) *Reference flow values.* Because the reference flow is not absolutely constant, sample and record values of $\dot{Q}_{refi}$ for 30 seconds and use the arithmetic mean of the values, $\bar{\dot{Q}}_{ref}$, as the reference value. Refer to 40 CFR 1065.602 for an example of calculating an arithmetic mean.

(3) *Linearity criteria.* The values measured during linearity verification for flow meters must meet the following criteria: $|x_{min}(a_1-1)+a_0| \leq 1\% \cdot \dot{Q}_{max}$; $a_1 = 0.98-1.02$; $SEE = \leq 2\% \cdot \dot{Q}_{max}$; and $r^2 \geq 0.990$.

(c) Perform linearity verifications for the following temperature measurements instead of those specified at 40 CFR 1065.307(e)(7):

(1) Test cell ambient air.

(2) Dilution air for PM sampling, including CVS, double-dilution, and partial-flow systems.

(3) PM sample.

(4) Chiller sample, for gaseous sampling systems that use thermal chillers to dry samples, and that use chiller temperature to calculate dewpoint at the chiller outlet. For testing, if you choose to use the high alarm temperature setpoint for the chiller temperature as a constant value in determining the amount of water removed from the emission sample, you may verify the accuracy of the high alarm temperature setpoint using good engineering judgment without following the linearity verification for chiller temperature. We recommend that you input a simulated reference temperature signal below the alarm setpoint, increase this signal until the high alarm trips, and verify that the alarm setpoint value is no less than 2 °C below the reference value at the trip point.

(5) CVS flow meter inlet temperature.

(d) Perform linearity verifications for the following pressure measurements instead of those specified at 40 CFR 1065.307(e)(8):

(1) Raw exhaust static pressure control.

(2) Barometric pressure.

(3) CVS flow meter inlet pressure.

(4) Sample dryer, for gaseous sampling systems that use either osmotic-membrane dryers or thermal chillers to dry samples. For your testing, if you choose to use a low alarm pressure setpoint for the sample dryer pressure as a constant value in determining the amount of water removed from the emission sample, you may verify the accuracy of the low alarm pressure setpoint using good engineering judgment without following the linearity verification for sample dryer pressure.

We recommend that you input a reference pressure signal above the alarm setpoint, decrease this signal until the low alarm trips, and verify that the alarm setpoint value is no more than 4 kPa above the reference value at the trip point.

(e) When following procedures or practices that we incorporate by reference in § 1066.1010, you must meet the linearity requirements given by the procedure or practice for any analytical instruments not covered under 40 CFR 1065.307, such as GC–FID or HPLC.

[79 FR 23823, Apr. 28, 2014, as amended at 81 FR 74197, Oct. 25, 2016]

EFFECTIVE DATE NOTE: At 86 FR 34581, June 29, 2021, § 1066.135 was amended, effective July 29, 2021.

§ 1066.140 Diluted exhaust flow calibration.

(a) *Overview*. This section describes how to calibrate flow meters for diluted exhaust constant-volume sampling (CVS) systems. We recommend that you also use this section to calibrate flow meters that use a subsonic venturi or ultrasonic flow to measure raw exhaust flow. You may follow the molar flow calibration procedures in 40 CFR 1065.340 instead of the procedures in this section.

(b) *Scope and frequency*. Perform this calibration while the flow meter is installed in its permanent position, except as allowed in paragraph (c) of this section. Perform this calibration after you change any part of the flow configuration upstream or downstream of the flow meter that may affect the flow-meter calibration. Perform this calibration upon initial CVS installation and whenever corrective action does not resolve a failure to meet the diluted exhaust flow verification (i.e., propane check) in 40 CFR 1065.341.

(c) *Ex-situ CFV and SSV calibration*. You may remove a CFV or SSV from its permanent position for calibration as long as the flow meter meets the requirements in 40 CFR 1065.340(c).

(d) *Reference flow meter*. Calibrate each CVS flow meter using a reference flow meter such as a subsonic venturi flow meter, a long-radius ASME/NIST flow nozzle, a smooth approach orifice, a laminar flow element, or an ultrasonic flow meter. Use a reference flow meter that reports quantities that are NIST-traceable within ±1% uncertainty. Use this reference flow meter's response to flow as the reference value for CVS flow-meter calibration.

(e) *Configuration*. Calibrate the system with any upstream screens or other restrictions that will be used during testing and that could affect the flow ahead of the flow meter. You may not use any upstream screen or other restriction that could affect the flow ahead of the reference flow meter, unless the flow meter has been calibrated with such a restriction.

(f) *PDP calibration*. Calibrate each positive-displacement pump (PDP) to determine a flow-versus-PDP speed equation that accounts for flow leakage across sealing surfaces in the PDP as a function of PDP inlet pressure. Determine unique equation coefficients for each speed at which you operate the PDP. Calibrate a PDP flow meter as follows:

(1) Connect the system as shown in Figure 1 of this section.

(2) Leaks between the calibration flow meter and the PDP must be less than 0.3% of the total flow at the lowest calibrated flow point; for example, at the highest restriction and lowest PDP-speed point.

(3) While the PDP operates, maintain a constant temperature at the PDP inlet within ±2% of the mean absolute inlet temperature, $\bar{T}_{in}$.

(4) Set the PDP speed to the first speed point at which you intend to calibrate.

(5) Set the variable restrictor to its wide-open position.

(6) Operate the PDP for at least 3 min to stabilize the system. Continue operating the PDP and record the mean values of at least 30 seconds of sampled data of each of the following quantities:

(i) The mean flow rate of the reference flow meter, $\bar{V}_{ref}$. This may include several measurements of different quantities, such as reference meter pressures and temperatures, for calculating $\bar{V}_{ref}$.

(ii) The mean temperature at the PDP inlet, $\bar{T}_{in}$.

(iii) The mean static absolute pressure at the PDP inlet, $\bar{P}_{in}$.

(iv) The mean static absolute pressure at the PDP outlet, $\bar{P}_{out}$.

(v) The mean PDP speed, $\bar{f}_{nPDP}$.

(7) Incrementally close the restrictor valve to decrease the absolute pressure at the inlet to the PDP, P_{in}.

(8) Repeat the steps in paragraphs (f)(6) and (7) of this section to record data at a minimum of six restrictor positions ranging from the wide-open restrictor position to the minimum expected pressure at the PDP inlet or the maximum expected differential (outlet minus inlet) pressure across the PDP during testing.

(9) Calibrate the PDP by using the collected data and the equations in §1066.625(a).

(10) Repeat the steps in paragraphs (f)(6) through (9) of this section for each speed at which you operate the PDP.

(11) Use the equations in §1066.630(a) to determine the PDP flow equation for emission testing.

(12) Verify the calibration by performing a CVS verification (i.e., propane check) as described in 40 CFR 1065.341.

(13) During emission testing ensure that the PDP is not operated either below the lowest inlet pressure point or above the highest differential pressure point in the calibration data.

(g) *SSV calibration*. Calibrate each subsonic venturi (SSV) to determine its discharge coefficient, C_d, for the expected range of inlet pressures. Calibrate an SSV flow meter as follows:

(1) Configure your calibration system as shown in Figure 1 of this section.

(2) Verify that any leaks between the calibration flow meter and the SSV are less than 0.3% of the total flow at the highest restriction.

(3) Start the blower downstream of the SSV.

(4) While the SSV operates, maintain a constant temperature at the SSV inlet within ±2% of the mean absolute inlet temperature, $\bar{T}_{in}$.

(5) Set the variable restrictor or variable-speed blower to a flow rate greater than the greatest flow rate expected during testing. You may not extrapolate flow rates beyond calibrated values, so we recommend that you make sure the Reynolds number, $Re^{\#}$, at the SSV throat at the greatest calibrated flow rate is greater than the maximum $Re^{\#}$ expected during testing.

(6) Operate the SSV for at least 3 min to stabilize the system. Continue operating the SSV and record the mean of at least 30 seconds of sampled data of each of the following quantities:

(i) The mean flow rate of the reference flow meter, $\bar{V}_{ref}$. This may include several measurements of different quantities for calculating $\bar{V}_{ref}$, such as reference meter pressures and temperatures.

(ii) The mean temperature at the venturi inlet, $\bar{T}_{in}$.

(iii) The mean static absolute pressure at the venturi inlet, $\bar{p}_{in}$.

(iv) Mean static differential pressure between the static pressure at the venturi inlet and the static pressure at the venturi throat, $\Delta\bar{p}_{ssv}$.

(7) Incrementally close the restrictor valve or decrease the blower speed to decrease the flow rate.

(8) Repeat the steps in paragraphs (g)(6) and (7) of this section to record data at a minimum of ten flow rates.

(9) Determine an equation to quantify C_d as a function of $Re^{\#}$ by using the collected data and the equations in §1066.625(b). Section 1066.625 also includes statistical criteria for validating the C_d versus $Re^{\#}$ equation.

(10) Verify the calibration by performing a CVS verification (i.e., propane check) as described in 40 CFR 1065.341 using the new C_d versus $Re^{\#}$ equation.

(11) Use the SSV only between the minimum and maximum calibrated $Re^{\#}$. If you want to use the SSV at a lower or higher $Re^{\#}$, you must recalibrate the SSV.

(12) Use the equations in §1066.630(b) to determine SSV flow during a test.

(h) *CFV calibration*. The calibration procedure described in this paragraph (h) establishes the value of the calibration coefficient, K_v, at measured values of pressure, temperature and air flow. Calibrate the CFV up to the highest expected pressure ratio, r, according to §1066.625. Calibrate the CFV as follows:

(1) Configure your calibration system as shown in Figure 1 of this section.

(2) Verify that any leaks between the calibration flow meter and the CFV are less than 0.3% of the total flow at the highest restriction.

(3) Start the blower downstream of the CFV.

(4) While the CFV operates, maintain a constant temperature at the CFV inlet within ±2% of the mean absolute inlet temperature, $\bar{T}_{in}$.

(5) Set the variable restrictor to its wide-open position. Instead of a variable restrictor, you may alternately vary the pressure downstream of the CFV by varying blower speed or by introducing a controlled leak. Note that some blowers have limitations on nonloaded conditions.

(6) Operate the CFV for at least 3 min to stabilize the system. Continue operating the CFV and record the mean values of at least 30 seconds of sampled data of each of the following quantities:

(i) The mean flow rate of the reference flow meter, $\bar{V}_{ref}$. This may include several measurements of different quantities, such as reference meter pressures and temperatures, for calculating $\bar{V}_{ref}$.

(ii) The mean temperature at the venturi inlet, $\bar{T}_{in}$.

(iii) The mean static absolute pressure at the venturi inlet, $\bar{p}_{in}$.

(iv) The mean static differential pressure between the CFV inlet and the CFV outlet, $\Delta\bar{p}_{CFV}$.

(7) Incrementally close the restrictor valve or decrease the downstream pressure to decrease the differential pressure across the CFV, Δp_{CFV}.

(8) Repeat the steps in paragraphs (h)(6) and (7) of this section to record mean data at a minimum of ten restrictor positions, such that you test the fullest practical range of $\Delta\bar{p}_{CFV}$ expected during testing. We do not require that you remove calibration components or CVS components to calibrate at the lowest possible restriction.

(9) Determine K_v and the highest allowable pressure ratio, r, according to §1066.625.

(10) Use K_v to determine CFV flow during an emission test. Do not use the CFV above the highest allowed r, as determined in §1066.625.

(11) Verify the calibration by performing a CVS verification (i.e., propane check) as described in 40 CFR 1065.341.

(12) If your CVS is configured to operate multiple CFVs in parallel, calibrate your CVS using one of the following methods:

(i) Calibrate every combination of CFVs according to this section and §1066.625(c). Refer to §1066.630(c) for instructions on calculating flow rates for this option.

(ii) Calibrate each CFV according to this section and §1066.625. Refer to §1066.630 for instructions on calculating flow rates for this option.

(i) *Ultrasonic flow meter calibration.* [Reserved]

Figure 1 of § 1066.140—CVS calibration configurations

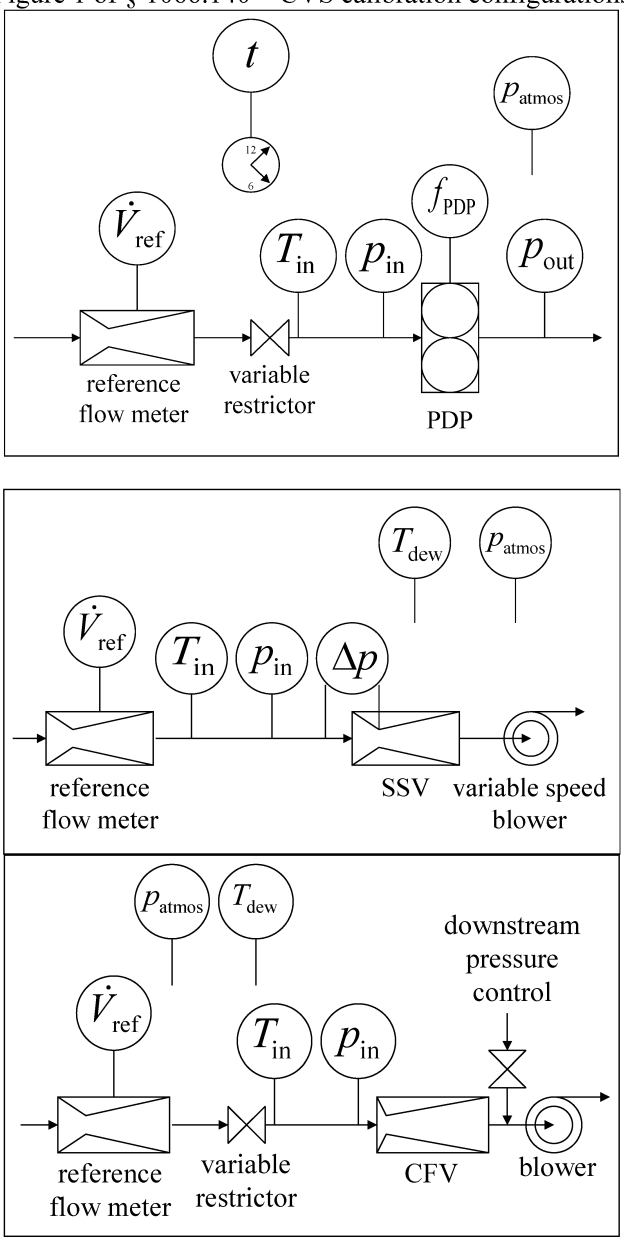

[79 FR 23823, Apr. 28, 2014, as amended at 81 FR 74197, Oct. 25, 2016]

§ 1066.145 Test fuel, engine fluids, analytical gases, and other calibration standards.

(a) *Test fuel.* Use test fuel as specified in the standard-setting part, or as specified in 40 CFR part 1065, subpart H, if it is not specified in the standard-setting part.

(b) *Lubricating oil.* Use lubricating oil as specified in 40 CFR 1065.740. For two-stroke engines that involve a specified mixture of fuel and lubricating oil, mix the lubricating oil with the fuel according to the manufacturer's specifications.

(c) *Coolant.* For liquid-cooled engines, use coolant as specified in 40 CFR 1065.745.

(d) *Analytical gases.* Use analytical gases that meet the requirements of 40 CFR 1065.750.

(e) *Mass standards.* Use mass standards that meet the requirements of 40 CFR 1065.790.

§ 1066.150 Analyzer interference and quench verification limit.

Analyzers must meet the interference and quench verification limits in the following table on the lowest, or most representative, instrument range that will be used during emission testing, instead of those specified in 40 CFR part 1065, subpart D:

TABLE 1 OF § 1066.150—ANALYZER INTERFERENCE AND QUENCH VERIFICATION LIMITS

Verification	Limit
40 CFR 1065.350	±2% of full scale.
40 CFR 1065.355	±2% of full scale.
40 CFR 1065.370	±2% of full scale.
40 CFR 1065.375	±2% of the flow-weighted mean concentration of N_2O expected at the standard.

Subpart C—Dynamometer Specifications

§ 1066.201 Dynamometer overview.

This subpart addresses chassis dynamometers and related equipment.

§ 1066.210 Dynamometers.\

(a) *General requirements.* A chassis dynamometer typically uses electrically generated load forces combined with its rotational inertia to recreate the mechanical inertia and frictional forces that a vehicle exerts on road surfaces (known as ''road load''). Load forces are calculated using vehicle-specific coefficients and response characteristics. The load forces are applied to the vehicle tires by rolls connected to motor/absorbers. The dynamometer uses a load cell to measure the forces the dynamometer rolls apply to the vehicle's tires.

(b) *Accuracy and precision.* The dynamometer's output values for road load must be NIST-traceable. We may determine traceability to a specific national or international standards organization to be sufficient to demonstrate NIST-traceability. The force-measurement system must be capable of indicating force readings as follows:

(1) For dynamometer testing of vehicles at or below 20,000 pounds GVWR, the dynamometer force-measurement system must be capable of indicating force readings during a test to a resolution of ±0.05% of the maximum load-cell force simulated by the dynamometer or ±9.8 N (±2.2 lbf), whichever is greater.

(2) For dynamometer testing of vehicles above 20,000 pounds GVWR, the force-measurement system must be capable of indicating force readings during a test to a resolution of ±0.05% of the maximum load-cell force simulated by the dynamometer or ±39.2 N (±8.8 lbf), whichever is greater.

(c) *Test cycles.* The dynamometer must be capable of fully simulating vehicle performance over applicable test cycles for the vehicles being tested as referenced in the corresponding standard-setting part, including operation at the combination of inertial and road-load forces corresponding to maximum road-load conditions and maximum simulated inertia at the highest acceleration rate experienced during testing.

(d) *Component requirements.* The following specifications apply:

(1) The nominal roll diameter must be 120 cm or greater. The dynamometer must have an independent drive roll for each drive axle as tested under § 1066.410(g), except that two drive axles may share a single drive roll. Use good engineering judgment to ensure that

the dynamometer roll diameter is large enough to provide sufficient tire-roll contact area to avoid tire overheating and power losses from tire-roll slippage.

(2) Measure and record force and speed at 10 Hz or faster. You may convert measured values to 1-Hz, 2-Hz, or 5-Hz values before your calculations, using good engineering judgment.

(3) The load applied by the dynamometer simulates forces acting on the vehicle during normal driving according to the following equation:

$$FR_i = A \cdot \frac{100}{\sqrt{100^2 + G_i^2}} + B \cdot v_i + C \cdot v_i^2 + M_e \cdot \frac{v_i - v_{i-1}}{t_i - t_{i-1}} + M \cdot a_g \cdot \frac{G_i}{\sqrt{100^2 + G_i^2}}$$

Eq. 1066.210-1

Where:

FR = total road-load force to be applied at the surface of the roll. The total force is the sum of the individual tractive forces applied at each roll surface.

i = a counter to indicate a point in time over the driving schedule. For a dynamometer operating at 10 Hz intervals over a 600 second driving schedule, the maximum value of i should be 6,000.

A = a vehicle-specific constant value representing the vehicle's frictional load in lbf or newtons. See subpart D of this part.

G_i = instantaneous road grade, in percent. If your duty cycle is not subject to road grade, set this value to 0.

B = a vehicle-specific coefficient representing load from drag and rolling resistance, which are a function of vehicle speed, in lbf/(mi/hr) or N·s/m. See subpart D of this part.

v = instantaneous linear speed at the roll surfaces as measured by the dynamometer, in mi/hr or m/s. Let $v_{i-1} = 0$ for $i = 0$.

C = a vehicle-specific coefficient representing aerodynamic effects, which are a function of vehicle speed squared, in lbf/(mi/hr)^2 or N·s^2/m^2. See subpart D of this part.

M_e = the vehicle's effective mass in lbm or kg, including the effect of rotating axles as specified in § 1066.310(b)(7).

t = elapsed time in the driving schedule as measured by the dynamometer, in seconds. Let $t_{i-1} = 0$ for $i = 0$.

M = the measured vehicle mass, in lbm or kg.

a_g = acceleration of Earth's gravity, as described in 40 CFR 1065.630.

(4) We recommend that a dynamometer capable of testing vehicles at or below 20,000 pounds GVWR be designed to apply an actual road-load force within ±1% or ±9.8 N (±2.2 lbf) of the reference value, whichever is greater. Note that slightly higher errors may be expected during highly transient operation for vehicles above 8,500 pounds GVWR.

(e) *Dynamometer manufacturer instructions*. This part specifies that you follow the dynamometer manufacturer's recommended procedures for things such as calibrations and general operation. If you perform testing with a dynamometer that you manufactured or if you otherwise do not have these recommended procedures, use good engineering judgment to establish the additional procedures and specifications we specify in this part, unless we specify otherwise. Keep records to describe these recommended procedures and how they are consistent with good engineering judgment, including any quantified error estimates.

[79 FR 23823, Apr. 28, 2014, as amended at 81 FR 74198, Oct. 25, 2016]

EFFECTIVE DATE NOTE: At 86 FR 34581, June 29, 2021, § 1066.210 was amended, effective July 29, 2021.

§ 1066.215 Summary of verification procedures for chassis dynamometers.

(a) *Overview*. This section describes the overall process for verifying and calibrating the performance of chassis dynamometers.

(b) *Scope and frequency*. The following table summarizes the required and recommended calibrations and verifications described in this subpart and indicates when they must occur:

TABLE 1 OF § 1066.215—SUMMARY OF REQUIRED DYNAMOMETER VERIFICATIONS

Type of verification	Minimum frequency [a]
§ 1066.220: Linearity verification	Speed: Upon initial installation, within 370 days before testing, and after major maintenance. Torque (load): Upon initial installation and after major maintenance.
§ 1066.225: Roll runout and diameter verification.	Upon initial installation and after major maintenance.
§ 1066.230: Time verification	Upon initial installation and after major maintenance.
§ 1066.235: Speed measurement verification.	Upon initial installation, within 370 days before testing, and after major maintenance.
§ 1066.240: Torque (load) transducer verification.	Upon initial installation, within 7 days of testing, and after major maintenance.
§ 1066.245: Response time verification	Upon initial installation, within 370 days before testing, and after major maintenance.
§ 1066.250: Base inertia verification	Upon initial installation and after major maintenance.
§ 1066.255: Parasitic loss verification	Upon initial installation, after major maintenance, and upon failure of a verification in § 1066.270 or § 1066.275.
§ 1066.260: Parasitic friction compensation verification.	Upon initial installation, after major maintenance, and upon failure of a verification in § 1066.270 or § 1066.275.
§ 1066.265: Acceleration and deceleration verification.	Upon initial installation and after major maintenance.
§ 1066.270: Unloaded coastdown verification.	Upon initial installation, within 7 days of testing, and after major maintenance.
§ 1066.275 Dynamometer readiness verification.	Upon initial installation, within 1 day before testing, and after major maintenance.

[a] Perform calibrations and verifications more frequently, according to measurement system manufacturer instructions and good engineering judgment.

(c) *Automated dynamometer verifications and calibrations*. In some cases, dynamometers are designed with internal diagnostic and control features to accomplish the verifications and calibrations specified in this subpart. You may use these automated functions instead of following the procedures we specify in this subpart to demonstrate compliance with applicable requirements, consistent with good engineering judgment.

(d) *Sequence of verifications and calibrations*. Upon initial installation and after major maintenance, perform the verifications and calibrations in the same sequence as noted in Table 1 of this section, except that you may perform speed linearity verification after the verifications in §§ 1066.225 and 1066.230. At other times, you may need to perform specific verifications or calibrations in a certain sequence, as noted in this subpart. If you perform major maintenance on a specific component, you are required to perform verifications and calibrations only on components or parameters that are affected by the maintenance.

(e) *Corrections*. Unless the regulation directs otherwise, if the dynamometer fails to meet any specified calibration or verification, make any necessary adjustments or repairs such that the dynamometer meets the specification before running a test. Repairs required to meet specifications are generally considered major maintenance under this part.

§ 1066.220 Linearity verification for chassis dynamometer systems.

(a) *Scope and frequency*. Perform linearity verification for dynamometer speed and torque at least as frequently as indicated in Table 1 of § 1066.215. The intent of linearity verification is to determine that the system responds accurately and proportionally over the measurement range of interest. Linearity verification generally consists of introducing a series of at least 10 reference values to a measurement system. The measurement system quantifies each reference value. The measured values are then collectively compared to the reference values by using a least-squares linear regression and the linearity criteria specified in Table 1 of this section.

(b) *Performance requirements*. If a measurement system does not meet the applicable linearity criteria in Table 1 of this section, correct the deficiency by re-calibrating, servicing, or replacing components as needed. Repeat the linearity verification after correcting

the deficiency to ensure that the measurement system meets the linearity criteria. Before you may use a measurement system that does not meet linearity criteria, you must demonstrate to us that the deficiency does not adversely affect your ability to demonstrate compliance with the applicable standards.

(c) *Procedure*. Use the following linearity verification protocol, or use good engineering judgment to develop a different protocol that satisfies the intent of this section, as described in paragraph (a) of this section:

(1) In this paragraph (c), the letter ''y'' denotes a generic measured quantity, the superscript over-bar denotes an arithmetic mean (such as $\bar{y}$), and the subscript ''$_{ref}$'' denotes the known or reference quantity being measured.

(2) Operate the dynamometer system at the specified operating conditions. This may include any specified adjustment or periodic calibration of the dynamometer system.

(3) Set dynamometer speed and torque to zero.

(4) Verify the dynamometer speed or torque signal based on the dynamometer manufacturer's recommendations.

(5) After verification, check for zero speed and torque. Use good engineering judgment to determine whether or not to rezero or re-verify speed and torque before continuing.

(6) For both speed and torque, use the dynamometer manufacturer's recommendations and good engineering judgment to select reference values, y_{refi}, that cover a range of values that you expect would prevent extrapolation beyond these values during emission testing. We recommend selecting zero speed and zero torque as reference values for the linearity verification.

(7) Use the dynamometer manufacturer's recommendations and good engineering judgment to select the order in which you will introduce the series of reference values. For example, you may select the reference values randomly to avoid correlation with previous measurements and to avoid the influence of hysteresis; you may select reference values in ascending or descending order to avoid long settling times of reference signals; or you may select values to ascend and then descend to incorporate the effects of any instrument hysteresis into the linearity verification.

(8) Set the dynamometer to operate at a reference condition.

(9) Allow time for the dynamometer to stabilize while it measures the reference values.

(10) At a recording frequency of at least 1 Hz, measure speed and torque values for 30 seconds and record the arithmetic mean of the recorded values,. Refer to 40 CFR 1065.602 for an example of calculating an arithmetic mean.

(11) Repeat the steps in paragraphs (c)(8) though (10) of this section until you measure speeds and torques at each of the reference settings.

(12) Use the arithmetic means, $\bar{y}_i$, and reference values, y_{refi}, to calculate least-squares linear regression parameters and statistical values to compare to the minimum performance criteria specified in Table 1 of this section. Use the calculations described in 40 CFR 1065.602. Using good engineering judgment, you may weight the results of individual data pairs (i.e., (y_{refi},$\bar{y}_i$)), in the linear regression calculations. Table 1 follows:

TABLE 1 OF § 1066.220—DYNAMOMETER MEASUREMENT SYSTEMS THAT REQUIRE LINEARITY VERIFICATIONS

Measurement system	Quantity	Linearity criteria			
		$\lvert y_{min} \cdot (a_1 - 1) + a_0 \rvert$	a_1	*SEE*	r^2
Speed	v	≤0.05% · v_{max}	0.98–1.02	≤2% · v_{max}	≥0.990
Torque (load)	T	≤1% · T_{max}	0.99–1.01	≤1% · T_{max}	≥0.990

(d) *Reference signals*. Generate reference values for the linearity-verification protocol in paragraph (c)

of this section as described for speed and torque in 40 CFR 1065.307(d).

§ 1066.225 Roll runout and diameter verification procedure.

(a) *Overview.* This section describes the verification procedure for roll runout and roll diameter. Roll runout is a measure of the variation in roll radius around the circumference of the roll.

(b) *Scope and frequency.* Perform these verifications upon initial installation and after major maintenance that could affect roll surface finish or dimensions (such as resurfacing or polishing).

(c) *Roll runout procedure.* Verify roll runout based on the following procedure, or an equivalent procedure based on good engineering judgment:

(1) Perform this verification with laboratory and dynamometer temperatures stable and at equilibrium. Release the roll brake and shut off power to the dynamometer. Remove any dirt, rubber, rust, and debris from the roll surface. Mark measurement locations on the roll surface using a marker. Mark the roll at a minimum of four equally spaced locations across the roll width; we recommend taking measurements every 150 mm across the roll. Secure the marker to the deck plate adjacent to the roll surface and slowly rotate the roll to mark a clear line around the roll circumference. Repeat this process for all measurement locations.

(2) Measure roll runout using an indicator with a probe that allows for measuring the position of the roll surface relative to the roll centerline as it turns through a complete revolution. The indicator must have some means of being securely mounted adjacent to the roll. The indicator must have sufficient range to measure roll runout at all points, with a minimum accuracy of ±0.025 mm. Calibrate the indicator according to the instrument manufacturer's instructions.

(3) Position the indicator adjacent to the roll surface at the desired measurement location. Position the shaft of the indicator perpendicular to the roll such that the point of the indicator is slightly touching the surface of the roll and can move freely through a full rotation of the roll. Zero the indicator according to the instrument manufacturer's instructions. Avoid distortion of the runout measurement from the weight of a person standing on or near the mounted dial indicator.

(4) Slowly turn the roll through a complete rotation and record the maximum and minimum values from the indicator. Calculate runout as the difference between these maximum and minimum values.

(5) Repeat the steps in paragraphs (c)(3) and (4) of this section for all measurement locations.

(6) The roll runout must be less than 0.254 mm (0.0100 inches) at all measurement locations.

(d) *Diameter procedure.* Verify roll diameter based on the following procedure, or an equivalent procedure based on good engineering judgment:

(1) Prepare the laboratory and the dynamometer as specified in paragraph (c)(1) of this section.

(2) Measure roll diameter using a Pi Tape®. Orient the Pi Tape® to the marker line at the desired measurement location with the Pi Tape® hook pointed outward. Temporarily secure the Pi Tape® to the roll near the hook end with adhesive tape. Slowly turn the roll, wrapping the Pi Tape® around the roll surface. Ensure that the Pi Tape® is flat and adjacent to the marker line around the full circumference of the roll. Attach a 2.26-kg weight to the hook of the Pi Tape® and position the roll so that the weight dangles freely. Remove the adhesive tape without disturbing the orientation or alignment of the Pi Tape®.

(3) Overlap the gage member and the vernier scale ends of the Pi Tape® to read the diameter measurement to the nearest 0.01 mm. Follow the manufacturer's recommendation to correct the measurement to 20 °C, if applicable.

(4) Repeat the steps in paragraphs (d)(2) and (3) of this section for all measurement locations.

(5) The measured roll diameter must be within ±0.254 mm of the specified nominal value at all measurement locations. You may revise the nominal value to meet this specification, as long as you use the corrected nominal value for all calculations in this subpart.

§ 1066.230 Time verification procedure.

(a) *Overview*. This section describes how to verify the accuracy of the dynamometer's timing device.

(b) *Scope and frequency*. Perform this verification upon initial installation and after major maintenance.

(c) *Procedure*. Perform this verification using one of the following procedures:

(1) *WWV method*. You may use the time and frequency signal broadcast by NIST from radio station WWV as the time standard if the trigger for the dynamometer timing circuit has a frequency decoder circuit, as follows:

(i) Contact station WWV by telephone by dialing (303) 499–7111 and listen for the time announcement. Verify that the trigger started the dynamometer timer. Use good engineering judgment to minimize error in receiving the time and frequency signal.

(ii) After at least 1000 seconds, re-dial station WWV and listen for the time announcement. Verify that the trigger stopped the dynamometer timer.

(iii) Compare the measured elapsed time, y_{act}, to the corresponding time standard, y_{ref}, to determine the time error, y_{error}, using the following equation:

$$y_{error} = \frac{y_{act} - y_{ref}}{y_{ref}} \cdot 100\ \%$$

Eq. 1066.230-1

(2) *Ramping method*. You may use an operator-defined ramp function to serve as the time standard as follows:

(i) Set up a signal generator to output a marker voltage at the peak of each ramp to trigger the dynamometer timing circuit. Output the designated marker voltage to start the verification period.

(ii) After at least 1000 seconds, output the designated marker voltage to end the verification period.

(iii) Compare the measured elapsed time between marker signals, y_{act}, to the corresponding time standard, y_{ref}, to determine the time error, y_{error}, using Eq. 1066.230–1.

(3) *Dynamometer coastdown method*. You may use a signal generator to output a known speed ramp signal to the dynamometer controller to serve as the time standard as follows:

(i) Generate upper and lower speed values to trigger the start and stop functions of the coastdown timer circuit. Use the signal generator to start the verification period.

(ii) After at least 1000 seconds, use the signal generator to end the verification period.

(iii) Compare the measured elapsed time between trigger signals, y_{act}, to the corresponding time standard, y_{ref}, to determine the time error, y_{error}, using Eq. 1066.230–1.

(d) *Performance evaluation*. The time error determined in paragraph (c) of this section may not exceed ±0.001%.

§ 1066.235 Speed verification procedure.

(a) *Overview*. This section describes how to verify the accuracy of the dynamometer speed determination. When performing this verification, you must also ensure the dynamometer speed at any devices used to display or record vehicle speed (such as a driver's aid) is representative of the speed input from the dynamometer speed determination.

(b) *Scope and frequency*. Perform this verification upon initial installation, within 370 days before testing, and after major maintenance.

(c) *Procedure*. Use one of the following procedures to verify the accuracy and resolution of the dynamometer speed simulation:

(1) *Pulse method*. Connect a universal frequency counter to the output of the dynamometer's speed-sensing device in

parallel with the signal to the dynamometer controller. The universal frequency counter must be calibrated according to the counter manufacturer's instructions and be capable of measuring with enough accuracy to perform the procedure as specified in this paragraph (c)(1). Make sure the instrumentation does not affect the signal to the dynamometer control circuits. Determine the speed error as follows:

(i) Set the dynamometer to speed-control mode. Set the dynamometer speed to a value of approximately 4.5 m/s (10 mi/hr); record the output of the frequency counter after 10 seconds. Determine the roll speed, v_{act}, using the following equation:

$$v_{act} = \frac{f \cdot d_{roll} \cdot \pi}{n}$$

Eq. 1066.235-1

Where:

f = frequency of the dynamometer speed sensing device, accurate to at least four significant figures.

d_{roll} = nominal roll diameter, accurate to the nearest 1.0 mm, consistent with §1066.225(d).

n = the number of pulses per revolution from the dynamometer roll speed sensor.

Example:

f = 2.9231 Hz = 2.9231 s^{-1}

d_{roll} = 904.40 mm = 0.90440 m

$$v_{act} = \frac{2.9231 \cdot 0.90440 \cdot \pi}{1}$$

v_{act} = 8.3053 m/s

(ii) Repeat the steps in paragraph (c)(1)(i) of this section for the maximum speed expected during testing and at least two additional evenly spaced speed points between the starting speed and the maximum speed point.

(iii) Compare the calculated roll speed, v_{act}, to each corresponding speed set point, v_{ref}, to determine values for speed error at each set point, v_{error}, using the following equation:

$$v_{error} = v_{act} - v_{ref}$$

Eq. 1066.235-2

Example:

v_{act} = 8.3053 m/s

v_{ref} = 8.3000 m/s

v_{error} = 8.3053 − 8.3000 = 0.0053 m/s

(2) *Frequency method.* Install a piece of tape in the shape of an arrowhead on the surface of the dynamometer roll near the outer edge. Put a reference mark on the deck plate in line with the tape. Install a stroboscope or photo tachometer on the deck plate and direct the flash toward the tape on the roll. The stroboscope or photo tachometer must be calibrated according to the instrument manufacturer's instructions and be capable of measuring with enough accuracy to perform the procedure as specified in this paragraph (c)(2). Determine the speed error as follows:

(i) Set the dynamometer to speed-control mode. Set the dynamometer speed to a speed value of approximately 4.5 m/s (10 mi/hr). Tune the stroboscope or photo tachometer until the signal matches the dynamometer roll speed. Record the frequency. Determine the roll speed, y_{act}, using Eq. 1066.235–1, using the stroboscope or photo tachometer's frequency for f.

(ii) Repeat the steps in paragraph (c)(2)(i) of this section for the maximum speed expected during testing and at least two additional evenly spaced speed points between the starting speed and the maximum speed point.

(iii) Compare the calculated roll speed, v_{act}, to each corresponding speed set point, v_{ref}, to determine values for speed error at each set point, y_{error}, using Eq. 1066.235–2.

(d) *Performance evaluation*. The speed error determined in paragraph (c) of this section may not exceed ±0.02 m/s at any speed set point.

[79 FR 23823, Apr. 28, 2014, as amended at 80 FR 9120, Feb. 19, 2015; 81 FR 74199, Oct. 25, 2016]

§ 1066.240 Torque transducer verification.

Verify torque-measurement systems by performing the verifications described in §§ 1066.270 and 1066.275.

§ 1066.245 Response time verification.

(a) *Overview*. This section describes how to verify the dynamometer's response time to a step change in tractive force.

(b) *Scope and frequency*. Perform this verification upon initial installation, within 370 days before testing (i.e., annually), and after major maintenance.

(c) *Procedure*. Use the dynamometer's automated process to verify response time. You may perform this test either at two different inertia settings corresponding approximately to the minimum and maximum vehicle weights you expect to test or using base inertia and two acceleration rates that cover the range of acceleration rates experienced during testing (such as 0.5 and 8 (mi/hr)/s). Use good engineering judgment to select road-load coefficients representing vehicles of the appropriate weight. Determine the dynamometer's settling response time, t_s, based on the point at which there are no measured results more than 10% above or below the final equilibrium value, as illustrated in Figure 1 of this section. The observed settling response time must be less than 100 milliseconds for each inertia setting. Figure 1 follows:

Figure 1 of § 1066.245—Example of a settling response time diagram

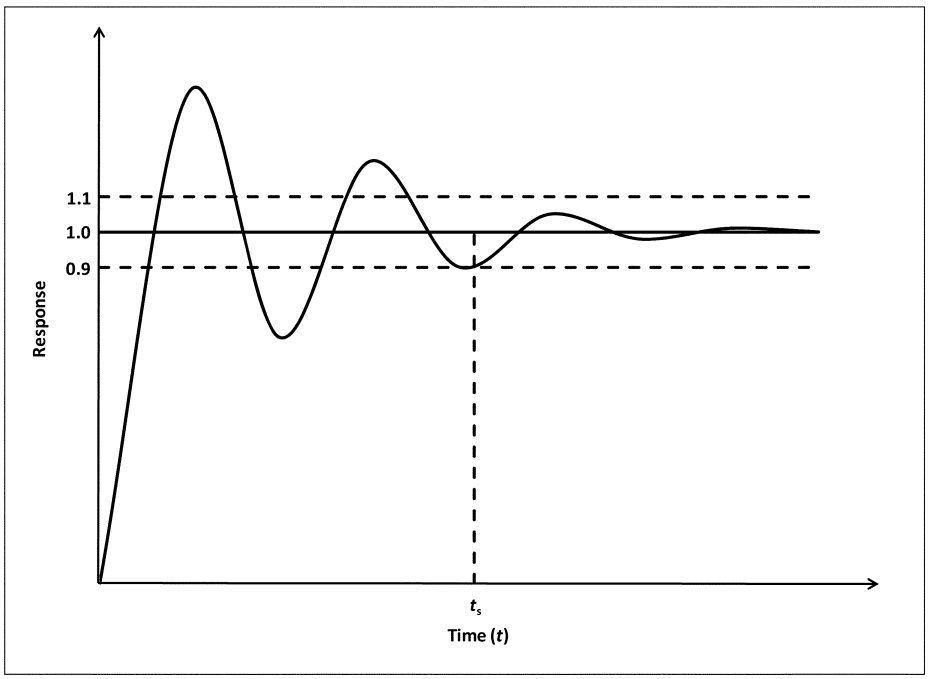

[79 FR 23823, Apr. 28, 2014, as amended at 81 FR 74199, Oct. 25, 2016]

§ 1066.250 Base inertia verification.

(a) *Overview*. This section describes how to verify the dynamometer's base inertia.

(b) *Scope and frequency*. Perform this verification upon initial installation and after major maintenance, such as maintenance that could affect roll inertia.

(c) *Procedure*. Verify the base inertia using the following procedure:

(1) Warm up the dynamometer according to the dynamometer manufacturer's instructions. Set the dynamometer's road-load inertia to zero, turning off any electrical simulation of road load and inertia so that the base inertia of the dynamometer is the only inertia present. Motor the rolls to 5 mi/hr. Apply a constant force to accelerate the roll at a nominal rate of 1 (mi/hr)/s. Measure the elapsed time to accelerate from 10 to 40 mi/hr, noting the corresponding speed and time points to the nearest 0.01 mi/hr and 0.01 s. Also determine mean force over the measurement interval.

(2) Starting from a steady roll speed of 45 mi/hr, apply a constant force to the roll to decelerate the roll at a nominal rate of 1 mi/hr/s. Measure the elapsed time to decelerate from 40 to 10 mi/hr, noting the corresponding speed and time points to the nearest 0.01 mi/hr and 0.01 s. Also determine mean force over the measurement interval.

(3) Repeat the steps in paragraphs (c)(1) and (2) of this section for a total of five sets of results at the nominal acceleration rate and the nominal deceleration rate.

(4) Use good engineering judgment to select two additional acceleration and deceleration rate pairs that cover the middle and upper rates expected during testing. Repeat the steps in paragraphs (c)(1) through (3) of this section at each of these additional acceleration and deceleration rates.

(5) Determine the base inertia, I_b, for each measurement interval using the following equation:

$$I_b = \frac{\bar{F}}{\left|\frac{v_{final} - v_{init}}{\Delta t}\right|}$$

Eq. 1066.250-1

Where:

$\bar{F}$ = mean dynamometer force over the measurement interval as measured by the dynamometer.

v_{final} = roll surface speed at the end of the measurement interval to the nearest 0.01 mi/hr.

v_{init} = roll surface speed at the start of the measurement interval to the nearest 0.01 mi/hr.

Δt = elapsed time during the measurement interval to the nearest 0.01 s.

Example:

$\bar{F}$ = 1.500 lbf = 48.26 ft·lbm/s^2

v_{final} = 40.00 mi/hr = 58.67 ft/s

v_{init} = 10.00 mi/hr = 14.67 ft/s

Δt = 30.00 s

$$I_b = \frac{48.26}{\left|\frac{58.67 - 14.67}{30.00}\right|}$$

I_b = 32.90 lbm

(6) Calculate the base inertia error, I_{berror}, for each of the thirty measured base inertia values, I_b, by comparing it to the manufacturer's stated base inertia, I_{bref}, using the following equation:

$$I_{berror} = \frac{I_{bref} - I_{bact}}{I_{bref}} \cdot 100\ \%$$

Eq. 1066.250-2

Example:

I_{bref} = 32.96 lbm

I_{bact} = 32.90 lbm (from paragraph (c)(5) of this section)

$$I_{\text{berror}} = \frac{32.96 - 32.90}{32.96} \cdot 100\ \%$$

$$I_{\text{berror}} = 0.18\ \%$$

(7) Determine the base inertia mean value $\bar{I}_b$, from the ten acceleration and deceleration interval base inertia values for each of the three acceleration/deceleration rates. Then determine the base inertia mean value, $\bar{I}_b$, from the base inertia values corresponding to acceleration/deceleration rates. Calculate base inertia mean values as described in 40 CFR 1065.602(b)

(8) Calculate the inertia error for the final base inertia mean value from paragraph (c)(7) of this section. Use Eq. 1066.250–2, substituting the final base inertia mean value from paragraph (c)(7) of this section for the individual base inertia.

(d) *Performance evaluation*. The dynamometer must meet the following specifications to be used for testing under this part:

(1) All base inertia errors determined under paragraph (c)(6) of this section may not exceed ±1.0%.

(2) The inertia error for the final base inertia mean value determined under paragraph (c)(8) of this section may not exceed ±0.20%.

[79 FR 23823, Apr. 28, 2014, as amended at 81 FR 74199, Oct. 25, 2016]

§ 1066.255 Parasitic loss verification.

(a) *Overview*. Verify the dynamometer's parasitic loss as described in this section, and correct as necessary. This procedure determines the dynamometer's internal losses that it must overcome to simulate road load. Characterize these losses in a parasitic loss curve that the dynamometer uses to apply compensating forces to maintain the desired road-load force at the roll surface.

(b) *Scope and frequency*. Perform this verification upon initial installation, after major maintenance, and upon failure of a verification in either § 1066.270 or § 1066.275.

(c) *Procedure*. Perform this verification by following the dynamometer manufacturer's specifications to establish a parasitic loss curve, taking data at fixed speed intervals to cover the range of vehicle speeds that will occur during testing. You may zero the load cell at a selected speed if that improves your ability to determine the parasitic loss. Parasitic loss forces may never be negative. Note that the torque transducers must be zeroed and spanned prior to performing this procedure.

(d) *Performance evaluation*. Some dynamometers automatically update the parasitic loss curve for further testing. If this is not the case, compare the new parasitic loss curve to the original parasitic loss curve from the dynamometer manufacturer or the most recent parasitic loss curve you programmed into the dynamometer. You may reprogram the dynamometer to accept the new curve in all cases, and you must reprogram the dynamometer if any point on the new curve departs from the earlier curve by more than ±9.0 N (±2.0 lbf) for dynamometers capable of testing vehicles at or below 20,000 pounds GVWR, or ±36.0 N (±8.0 lbf) for dynamometers not capable of testing vehicles at or below 20,000 pounds GVWR.

[79 FR 23823, Apr. 28, 2014, as amended at 80 FR 9120, Feb. 19, 2015]

EFFECTIVE DATE NOTE: At 86 FR 34581, June 29, 2021, § 1066.255 was amended, effective July 29, 2021.

§ 1066.260 Parasitic friction compensation evaluation.

(a) *Overview*. This section describes how to verify the accuracy of the dynamometer's friction compensation.

(b) *Scope and frequency*. Perform this verification upon initial installation, after major maintenance, and upon failure of a verification in either § 1066.270 or § 1066.275. Note that this procedure relies on proper verification of speed and torque, as described in

§§ 1066.235 and 1066.240. You must also first verify the dynamometer's parasitic loss curve as specified in § 1066.255.

(c) *Procedure.* Use the following procedure to verify the accuracy of the dynamometer's friction compensation:

(1) Warm up the dynamometer as specified by the dynamometer manufacturer.

(2) Perform a torque verification as specified by the dynamometer manufacturer. For torque verifications relying on shunt procedures, if the results do not conform to specifications, recalibrate the dynamometer using NIST-traceable standards as appropriate until the dynamometer passes the torque verification. Do not change the dynamometer's base inertia to pass the torque verification.

(3) Set the dynamometer inertia to the base inertia with the road-load coefficients A, B, and C set to 0. Set the dynamometer to speed-control mode with a target speed of 50 mi/hr or a higher speed recommended by the dynamometer manufacturer. Once the speed stabilizes at the target speed, switch the dynamometer from speed-control to torque-control and allow the roll to coast for 60 seconds. Record the initial and final speeds and the corresponding start and stop times. If friction compensation is executed perfectly, there will be no change in speed during the measurement interval.

(4) Calculate the power equivalent of friction compensation error, FC_{error}, using the following equation:

$$FC_{error} = \frac{I}{2 \cdot t} \cdot \left(v_{init}^2 - v_{final}^2\right)$$

Eq. 1066.260-1

Where:

I = dynamometer inertia setting.

t = duration of the measurement interval, accurate to at least 0.01 s.

v_{init} = the roll speed corresponding to the start of the measurement interval, accurate to at least 0.05 mi/hr.

v_{final} = the roll speed corresponding to the end of the measurement interval, accurate to at least 0.05 mi/hr.

Example:

I = 2000 lbm = 62.16 lbf·s²/ft

t = 60.0 s

v_{init} = 9.2 mi/hr = 13.5 ft/s

v_{final} = 10.0 mi/hr = 14.7 ft/s

$$FC_{error} = \frac{62.16}{2 \cdot 60.00} \cdot \left(13.5^2 - 14.7^2\right)$$

FC_{error} = −16.5 ft·lbf/s = −0.031 hp

(5) The friction compensation error may not exceed ±0.15 hp for dynamometers capable of testing vehicles at or below 20,000 pounds GVWR, or ±0.6 hp for dynamometers not capable of testing vehicles at or below 20,000 pounds GVWR.

[79 FR 23823, Apr. 28, 2014, as amended at 81 FR 74200, Oct. 25, 2016]

EFFECTIVE DATE NOTE: At 86 FR 34581, June 29, 2021, § 1066.260 was amended, effective July 29, 2021.

§ 1066.265 Acceleration and deceleration verification.

(a) *Overview.* This section describes how to verify the dynamometer's ability to achieve targeted acceleration and deceleration rates. Paragraph (c) of this section describes how this verification applies when the dynamometer is programmed directly for a specific acceleration or deceleration rate. Paragraph (d) of this section describes how this verification applies when the dynamometer is programmed

with a calculated force to achieve a targeted acceleration or deceleration rate.

(b) *Scope and frequency*. Perform this verification or an equivalent procedure upon initial installation and after major maintenance that could affect acceleration and deceleration accuracy. Note that this procedure relies on proper verification of speed as described in § 1066.235.

(c) *Verification of acceleration and deceleration rates*. Activate the dynamometer's function generator for measuring roll revolution frequency. If the dynamometer has no such function generator, set up a properly calibrated external function generator consistent with the verification described in this paragraph (c). Use the function generator to determine actual acceleration and deceleration rates as the dynamometer traverses speeds between 10 and 40 mi/hr at various nominal acceleration and deceleration rates. Verify the dynamometer's acceleration and deceleration rates as follows:

(1) Set up start and stop frequencies specific to your dynamometer by identifying the roll-revolution frequency, f, in revolutions per second (or Hz) corresponding to 10 mi/hr and 40 mi/hr vehicle speeds, accurate to at least four significant figures, using the following equation:

$$f = \frac{v \cdot n}{d_{\text{roll}} \cdot \pi}$$

Eq. 1066.265-1

Where:

v = the target roll speed, in inches per second (corresponding to drive speeds of 10 mi/hr or 40 mi/hr).

n = the number of pulses from the dynamometer's roll-speed sensor per roll revolution.

d_{roll} = roll diameter, in inches.

(2) Program the dynamometer to accelerate the roll at a nominal rate of 1 mi/hr/s from 10 mi/hr to 40 mi/hr. Measure the elapsed time to reach the target speed, to the nearest 0.01 s. Repeat this measurement for a total of five runs. Determine the actual acceleration rate for each run, a_{act}, using the following equation:

$$a_{\text{act}} = \frac{v_{\text{final}} - v_{\text{init}}}{t}$$

Eq. 1066.265-2

Where:

a_{act} = acceleration rate (decelerations have negative values).

v_{final} = the target value for the final roll speed.

v_{init} = the setpoint value for the initial roll speed.

t = time to accelerate from v_{init} to v_{final}.

Example:

v_{final} = 40 mi/hr

v_{init} = 10 mi/hr

t = 30.003 s

$$a_{\text{act}} = \frac{40.00 - 10.00}{30.03}$$

a_{act} = 0.999 (mi/hr)/s

(3) Program the dynamometer to decelerate the roll at a nominal rate of 1 (mi/hr)/s from 40 mi/hr to 10 mi/hr. Measure the elapsed time to reach the target speed, to the nearest 0.01 s. Repeat this measurement for a total of five runs. Determine the actual acceleration rate, $a_{act,}$ using Eq. 1066.265–2.

(4) Repeat the steps in paragraphs (c)(2) and (3) of this section for additional acceleration and deceleration rates in 1 (mi/hr)/s increments up to and including one increment above the maximum acceleration rate expected during testing. Average the five repeat runs to calculate a mean acceleration rate, $\bar{a}_{act}$, at each setting.

(5) Compare each mean acceleration rate, $\bar{a}_{act}$, to the corresponding nominal acceleration rate, a_{ref}, to determine values for acceleration error, a_{error}, using the following equation:

$$a_{error} = \frac{\bar{a}_{act} - a_{ref}}{a_{ref}} \cdot 100\ \%$$

Eq. 1066.265-3

Example:

$\bar{a}_{act}$ = 0.999 (mi/hr)/s

a_{ref} = 1 (mi/hr)/s

$$a_{error} = \frac{0.999 - 1}{1} \cdot 100\ \%$$

a_{error} = −0.100%

(d) *Verification of forces for controlling acceleration and deceleration.* Program the dynamometer with a calculated force value and determine actual acceleration and deceleration rates as the dynamometer traverses speeds between 10 and 40 mi/hr at various nominal acceleration and deceleration rates. Verify the dynamometer's ability to achieve certain acceleration and deceleration rates with a given force as follows:

(1) Calculate the force setting, F, using the following equation:

$$F = I_b \cdot |a|$$

Eq. 1066.265-4

Where:

I_b = the dynamometer manufacturer's stated base inertia, in lbf·s²/ft.

a = nominal acceleration rate, in ft/s².

Example:

I_b = 2967 lbm = 92.217 lbf·s²/ft

a = 1 (mi/hr)/s = 1.4667 ft/s²

F = 92.217 − 1.4667

F = 135.25 lbf

(2) Set the dynamometer to road-load mode and program it with a calculated force to accelerate the roll at a nominal rate of 1 (mi/hr)/s from 10 mi/hr to 40 mi/hr. Measure the elapsed time to reach the target speed, to the nearest

0.01 s. Repeat this measurement for a total of five runs. Determine the actual acceleration rate, a_{act}, for each run using Eq. 1066.265–2. Repeat this step to determine measured ''negative acceleration'' rates using a calculated force to decelerate the roll at a nominal rate of 1 (mi/hr)/s from 40 mi/hr to 10 mi/hr. Average the five repeat runs to calculate a mean acceleration rate, $\overline{a}_{act}$, at each setting.

(3) Repeat the steps in paragraph (d)(2) of this section for additional acceleration and deceleration rates as specified in paragraph (c)(4) of this section.

(4) Compare each mean acceleration rate, $\overline{a}_{act}$, to the corresponding nominal acceleration rate, $\overline{a}_{ref}$, to determine values for acceleration error, $\overline{a}_{error}$, using Eq. 1066.265–3.

(e) *Performance evaluation*. The acceleration error from paragraphs (c)(5) and (d)(4) of this section may not exceed ±1.0%.

[79 FR 23823, Apr. 28, 2014, as amended at 81 FR 74200, Oct. 25, 2016]

EFFECTIVE DATE NOTE: At 86 FR 34581, June 29, 2021, § 1066.265 was amended, effective July 29, 2021.

§ 1066.270 Unloaded coastdown verification.

(a) *Overview*. Use force measurements to verify the dynamometer's settings based on coastdown procedures.

(b) *Scope and frequency*. Perform this verification upon initial installation, within 7 days of testing, and after major maintenance.

(c) *Procedure*. This procedure verifies the dynamometer's settings derived from coastdown testing. For dynamometers that have an automated process for this procedure, perform this evaluation by setting the initial speed, final speed, inertial coefficients, and road-load coefficients as required for each test, using good engineering judgment to ensure that these values properly represent in-use operation. Use the following procedure if your dynamometer does not perform this verification with an automated process:

(1) Warm up the dynamometer as specified by the dynamometer manufacturer.

(2) With the dynamometer in coastdown mode, set the dynamometer inertia for the smallest vehicle weight that you expect to test and set A, B, and C road-load coefficients to values typical of those used during testing. Program the dynamometer to coast down over the dynamometer operational speed range (typically from a speed of 80 mi/hr through a minimum speed at or below 10 mi/hr). Perform at least one coastdown run over this speed range, collecting data over each 10 mi/hr interval.

(3) Repeat the steps in paragraph (c)(2) of this section with the dynamometer inertia and road-load coefficients set for the largest vehicle weight that you expect to test.

(4) Determine the average coastdown force, $\overline{F}$, for each speed and inertia setting for each of the coastdowns performed using the following equation:

$$\overline{F} = \frac{I \cdot \left(v_{init} - v_{final}\right)}{t}$$

Eq. 1066.270-1

Where:

$\overline{F}$ = the mean force measured during the coastdown for each speed interval and inertia setting, expressed in lbf·s²/ft and rounded to four significant figures.

I = the dynamometer's inertia setting, in lbf·s²/ft.

v_{init} = the speed at the start of the coastdown interval, expressed in ft/s to at least four significant figures.

v_{final} = the speed at the end of the coastdown interval, expressed in ft/s to at least four significant figures.

t = coastdown time for each speed interval and inertia setting, accurate to at least 0.01 s.

Example:

I = 2000 lbm = 62.16 lbf·s²/ft
v_{init} = 25 mi/hr = 36.66 ft/s
v_{final} = 15 mi/hr = 22.0 ft/s
t = 5.00 s

$$\overline{F} = \frac{62.16 \cdot (36.66 - 22.0)}{5.00}$$

$\overline{F}$ = 182.2 lbf

(5) Calculate the target value of coastdown force, F_{ref}, based on the applicable dynamometer parameters for each speed interval and inertia setting.

(6) Compare the mean value of the coastdown force measured for each speed interval and inertia setting, $\overline{F}_{act}$, to the corresponding F_{ref} to determine values for coastdown force error, F_{error}, using the following equation:

$$F_{error} = \left| \frac{\overline{F}_{act} - F_{ref}}{F_{ref}} \right| \cdot 100$$

Eq. 1066.270-2

Example:
F_{ref} = 192 lbf

$\overline{F}_{act}$ = 191 lbf

$$F_{error} = \left| \frac{191 - 192}{192} \right| \cdot 100$$

F_{error} = 0.5%

(d) *Performance evaluation.* The coastdown force error determined in paragraph (c) of this section may not exceed the following:

(1) For vehicles at or below 20,000 pounds GVWR, the maximum allowable error, $F_{errormax}$, for all speed intervals and inertia settings is 1.0% or the value determined from Eq. 1066.270–3, whichever is greater.

$$F_{errormax} = \frac{2.2 \text{ lbf}}{F_{ref}} \cdot 100$$

Eq. 1066.270-3

Example:
F_{ref} = 192 lbf

$$F_{\text{errormax}} = \frac{2.2\ \text{lbf}}{192} \cdot 100$$

F_{errormax} = 1.14%

(2) For vehicles above 20,000 pounds GVWR, the maximum allowable error, F_{errormax}, for all speed intervals and inertia settings is ±1.0% or ±39.2 N, whichever is greater.

(e) *Remedy for nonconforming dynamometers*. If the dynamometer is not able to meet this requirement, diagnose and repair the dynamometer before continuing with emission testing. Diagnosis should include performing the verifications in § 1066.255 and § 1066.260.

[79 FR 23823, Apr. 28, 2014, as amended at 80 FR 9120, Feb. 19, 2015; 81 FR 74201, Oct. 25, 2016]

EFFECTIVE DATE NOTE: At 86 FR 34582, June 29, 2021, § 1066.270 was amended, effective July 29, 2021.

§ 1066.275 Daily dynamometer readiness verification.

(a) *Overview*. This section describes how to verify that the dynamometer is ready for emission testing.

(b) *Scope and frequency*. Perform this verification upon initial installation, within 1 day before testing, and after major maintenance.

(c) *Procedure*. For dynamometers that have an automated process for this verification procedure, perform this evaluation by setting the initial speed and final speed and the inertial and road-load coefficients as required for the test, using good engineering judgment to ensure that these values properly represent in-use operation. Use the following procedure if your dynamometer does not perform this verification with an automated process:

(1) With the dynamometer in coastdown mode, set the dynamometer inertia to the base inertia with the road-load coefficient A set to 20 lbf (or a force that results in a coastdown time of less than 10 minutes) and coefficients B and C set to 0. Program the dynamometer to coast down for one 10 mi/hr interval from 55 mi/hr down to 45 mi/hr. If your dynamometer is not capable of performing one discrete coastdown, then coast down with preset 10 mi/hr intervals that include a 55 mi/hr to 45 mi/hr interval.

(2) Perform the coastdown.

(3) Determine the coastdown force and coastdown force error using Eqs. 1066.270–1 and 1066.270–2.

(d) *Performance evaluation*. The coastdown force error determined in paragraph (c) of this section may not exceed the following:

(1) For vehicles at or below 20,000 pounds GVWR, ±1.0% or ±9.8 N (±2.2 lbf), whichever is greater.

(2) For vehicles above 20,000 pounds GVWR, ±1.0% or ±39.2 N (±8.8 lbf), whichever is greater.

(e) *Remedy for nonconforming dynamometers*. If the verification results fail to meet the performance criteria in paragraph (d) of this section, perform the procedure up to two additional times. If the dynamometer is consistently unable to meet the performance criteria, diagnose and repair the dynamometer before continuing with emission testing. Diagnosis should include performing the verifications in § 1066.255 and § 1066.260.

[79 FR 23823, Apr. 28, 2014, as amended at 81 FR 74201, Oct. 25, 2016]

EFFECTIVE DATE NOTE: At 86 FR 34582, June 29, 2021, § 1066.275 was amended, effective July 29, 2021.

§ 1066.290 Verification of speed accuracy for the driver's aid.

Use good engineering judgment to provide a driver's aid that facilitates compliance with the requirements of § 1066.425. Verify the speed accuracy of the driver's aid as described in § 1066.235.

Subpart D—Coastdown

§ 1066.301 Overview of road-load determination procedures.

Vehicle testing on a chassis dynamometer involves simulating the road-load force, which is the sum of forces acting on a vehicle from aerodynamic drag, tire rolling resistance, driveline

losses, and other effects of friction. Determine dynamometer settings to simulate road-load force in two stages. First, perform a road-load force specification by characterizing on-road operation. Second, perform a road-load derivation to determine the appropriate dynamometer load settings to simulate the road-load force specification from the on-road test.

(a) The procedures described in this subpart are used to determine the road-load target coefficients (A, B, and C) for the simulated road-load equation in § 1066.210(d)(3).

(b) The general procedure for determining road-load force is performing coastdown tests and calculating road-load coefficients. This procedure is described in SAE J1263 and SAE J2263 (incorporated by reference in § 1066.1010). This subpart specifies certain deviations from those procedures for certain applications.

(c) Use good engineering judgment for all aspects of road-load determination. For example, minimize the effects of grade by performing coastdown testing on reasonably level surfaces and determining coefficients based on average values from vehicle operation in opposite directions over the course.

[80 FR 9121, Feb. 19, 2015, as amended at 81 FR 74201, Oct. 25, 2016]

§ 1066.305 Procedures for specifying road-load forces for motor vehicles at or below 14,000 pounds GVWR.

(a) For motor vehicles at or below 14,000 pounds GVWR, develop representative road-load coefficients to characterize each vehicle covered by a certificate of conformity. Calculate road-load coefficients by performing coastdown tests using the provisions of SAE J1263 and SAE J2263 (incorporated by reference in § 1066.1010). This protocol establishes a procedure for determination of vehicle road load force for speeds between 115 and 15 km/hr (71.5 and 9.3 mi/hr); the final result is a model of road-load force (as a function of speed) during operation on a dry, level road under reference conditions of 20 °C, 98.21 kPa, no wind, no precipitation, and the transmission in neutral. You may use other methods that are equivalent to SAE J2263, such as equivalent test procedures or analytical modeling, to characterize road load using good engineering judgment. Determine dynamometer settings to simulate the road-load profile represented by these road-load target coefficients as described in § 1066.315. Supply representative road-load forces for each vehicle at speeds above 15 km/hr (9.3 mi/hr), and up to 115 km/hr (71.5 mi/hr), or the highest speed from the range of applicable duty cycles.

(b) For cold temperature testing described in subpart H of this part, determine road-load target coefficients using one of the following methods:

(1) You may perform coastdown tests or use other methods to characterize road load as described in paragraph (a) of this section based on vehicle operation at a nominal ambient temperature of −7 °C (20 °F).

(2) You may multiply each of the road-load target coefficients determined using the procedures described in paragraph (a) of this section by 1.1 to approximate a 10 percent decrease in coastdown time for the test vehicle.

[80 FR 9121, Feb. 19, 2015, as amended at 81 FR 74202, Oct. 25, 2016]

§ 1066.310 Coastdown procedures for vehicles above 14,000 pounds GVWR.

This section describes coastdown procedures that are unique to vehicles above 14,000 pounds GVWR. These procedures are valid for calculating road-load coefficients for chassis and post-transmission powerpack testing. These procedures are also valid for calculating drag area (C_dA) to demonstrate compliance with Phase 1 greenhouse gas emission standards under 40 CFR part 1037.

(a) Determine road-load coefficients by performing a minimum of 16 valid coastdown runs (8 in each direction).

(b) Follow the provisions of Sections 1 through 9 of SAE J1263 and SAE J2263 (incorporated by reference in § 1066.1010), except as described in this paragraph (b). The terms and variables identified in this paragraph (b) have the meaning given in SAE J1263 or J2263 unless specified otherwise.

(1) The test condition specifications of SAE J1263 apply except as follows for wind and road conditions:

(i) We recommend that you do not perform coastdown testing on days for which winds are forecast to exceed 6.0 mi/hr.

(ii) The grade of the test track or road must not be excessive (considering factors such as road safety standards and effects on the coastdown results). Road conditions should follow Section 7.4 of SAE J1263, except that road grade may exceed 0.5%. If road grade is greater than 0.02% over the length of the test surface, you must incorporate into the analysis road grade as a function of distance along the length of the test surface. Use Section 11.5 of SAE J2263 to calculate the force due to grade.

(2) Operate the vehicle at a top speed above 70 mi/hr, or at its maximum achievable speed if it cannot reach 70 mi/hr. If a vehicle is equipped with a vehicle speed limiter that is set for a maximum speed below 70 mi/hr, you must disable the vehicle speed limiter. Start the test at or above 70 mi/hr, or at the vehicle's maximum achievable speed if it cannot reach 70 mi/hr. Collect data through a minimum speed at or below 15 mi/hr. Data analysis for valid coastdown runs must include the range of vehicle speeds specified in this paragraph (b)(2).

(3) Gather data regarding wind speed and direction, in coordination with time-of-day data, using at least one stationary electro-mechanical anemometer and suitable data loggers meeting the specifications of SAE J1263, as well as the following additional specifications for the anemometer placed adjacent to the test surface:

(i) Calibrate the equipment by running the zero-wind and zero-angle calibrations within 24 hours before conducting the coastdown procedures. If the coastdown procedures are not complete 24 hours after calibrating the equipment, repeat the calibration for another 24 hours of data collection.

(ii) Record the location of the anemometer using a GPS measurement device adjacent to the test surface (approximately) at the midway distance along the test surface used for coastdowns.

(iii) Position the anemometer such that it will be at least 2.5 but not more than 3.0 vehicle widths from the test vehicle's centerline as the test vehicle passes the anemometer.

(iv) Mount the anemometer at a height that is within 6 inches of half the test vehicle's maximum height.

(v) Place the anemometer at least 50 feet from the nearest tree and at least 25 feet from the nearest bush (or equivalent roadside features).

(vi) The height of the grass surrounding the stationary anemometer may not exceed 10% of the anemometer's mounted height, within a radius equal to the anemometer's mounted height.

(4) You may split runs as per Section 9.3.1 of SAE J2263, but we recommend whole runs. If you split a run, analyze each portion separately, but count the split runs as one run with respect to the minimum number of runs required.

(5) You may perform consecutive runs in a single direction, followed by consecutive runs in the opposite direction, consistent with good engineering judgment. Harmonize starting and stopping points to the extent practicable to allow runs to be paired.

(6) All valid coastdown run times in each direction must be within 2.0 standard deviations of the mean of the valid coastdown run times (from the specified maximum speed down to 15 mi/hr) in that direction. Eliminate runs outside this range. After eliminating these runs you must have at least eight valid runs in each direction. You may use coastdown run times that do not meet these standard deviation requirements if we approve it in advance. In your request, describe why the vehicle is not able to meet the specified standard deviation requirements and propose an alternative set of requirements.

(7) Analyze data for chassis and post-transmission powerpack testing or for use in the GEM simulation tool as follows:

(i) Follow the procedures specified in Section 10 of SAE J1263 or Section 11 of SAE J2263 to calculate coefficients for chassis and post-transmission powerpack testing.

(ii) Determine drag area, C_dA, as follows instead of using the procedure specified in Section 10 of SAE J1263:

(A) Measure vehicle speed at fixed intervals over the coastdown run (generally at 10 Hz), including speeds at or above 15 mi/hr and at or below the specified maximum speed. Establish the elevation corresponding to each interval as described in SAE J2263 if you need to incorporate the effects of road grade.

(B) Calculate the vehicle's effective mass, M_e, in kg by adding 56.7 kg to the measured vehicle mass, M, for each tire making road contact. This accounts for the rotational inertia of the wheels and tires.

(C) Calculate the road-load force for each measurement interval, F_i, using the following equation:

$$F_i = -M_e \cdot \frac{v_i - v_{i-1}}{\Delta t}$$

Eq. 1066.310-1

Where:

i = an interval counter, starting with i = 1 for the first interval. The designation (i-1) corresponds to the end of the previous interval or, for the first interval, to the start of the test run.

M_e = the vehicle's effective mass, expressed to at least the nearest 0.1 kg.

v = vehicle speed at the beginning and end of the measurement interval.

Δt = elapsed time over the measurement interval, in seconds.

(D) Plot the data from all the coastdown runs on a single plot of F_i vs. v_i^2 to determine the slope correlation, D, based on the following equation:

$$F_i - M \cdot a_g \cdot \frac{\Delta h}{\Delta s} = A_m + D \cdot v_i^2$$

Eq. 1066.310-2

Where:

M = the measured vehicle mass, expressed to at least the nearest 0.1 kg.

a_g = acceleration of Earth's gravity, as described in 40 CFR 1065.630.

Δh = change in elevation over the measurement interval, in m. Assume Δh = 0 if you are not correcting for grade.

Δs = distance the vehicle travels down the road during the measurement interval, in m.

A_m = the calculated value of the y-intercept based on the curve-fit.

(E) Calculate drag area, C_dA, in m² using the following equation:

$$C_d A = \frac{2 \cdot D_{adj}}{\rho}$$

Eq. 1066.310-3

Where:

ρ = air density at reference conditions = 1.17 kg/m^3.

$$D_{adj} = D \cdot \left(\frac{\overline{T}}{293} \right) \cdot \left(\frac{98.21}{\overline{p}_{act}} \right)$$

Eq. 1066.310-4

$\bar{T}$ = mean ambient absolute temperature during testing, in K.

$\bar{P}$ = mean ambient pressuring during the test, in kPa.

(8) Determine the A, B, and C coefficients identified in § 1066.210 as follows:

(i) For chassis and post-transmission powerpack testing, follow the procedures specified in Section 10 of SAE J1263 or Section 12 of SAE J2263.

(ii) For the GEM simulation tool, use the following values:

A = A_m

B = 0

C = D_{adj}

[79 FR 23823, Apr. 28, 2016, as amended at 81 FR 74202, Oct. 25, 2016]

§ 1066.315 Dynamometer road-load setting.

Determine dynamometer road-load settings for chassis testing by following SAE J2264 (incorporated by reference in § 1066.1010).

Subpart E—Preparing Vehicles and Running an Exhaust Emission Test

§ 1066.401 Overview.

(a) Use the procedures detailed in this subpart to measure vehicle emissions over a specified drive schedule. Different procedures may apply for criteria pollutants and greenhouse gas emissions as described in the standard-setting part. This subpart describes how to—

(1) Determine road-load power, test weight, and inertia class.

(2) Prepare the vehicle, equipment, and measurement instruments for an emission test.

(3) Perform pre-test procedures to verify proper operation of certain equipment and analyzers and to prepare them for testing.

(4) Record pre-test data.

(5) Sample emissions.

(6) Record post-test data.

(7) Perform post-test procedures to verify proper operation of certain equipment and analyzers.

(8) Weigh PM samples.

(b) The overall test generally consists of prescribed sequences of fueling, parking, and driving at specified test conditions. An exhaust emission test generally consists of measuring emissions and other parameters while a vehicle follows the drive schedules specified in the standard-setting part. There are two general types of test cycles:

(1) *Transient cycles*. Transient test cycles are typically specified in the standard-setting part as a second-by-second sequence of vehicle speed commands. Operate a vehicle over a transient cycle such that the speed follows the target values. Proportionally sample emissions and other parameters and calculate emission rates as specified in subpart G of this part to calculate emissions. The standard-setting part may specify three types of transient testing based on the approach to starting the measurement, as follows:

(i) A cold-start transient cycle where you start to measure emissions just before starting an engine that has not been warmed up.

(ii) A hot-start transient cycle where you start to measure emissions just before starting a warmed-up engine.

(iii) A hot-running transient cycle where you start to measure emissions after an engine is started, warmed up, and running.

(2) *Cruise cycles.* Cruise test cycles are typically specified in the standard-setting part as a discrete operating point that has a single speed command.

(i) Start a cruise cycle as a hot-running test, where you start to measure emissions after the engine is started and warmed up and the vehicle is running at the target test speed.

(ii) Sample emissions and other parameters for the cruise cycle in the same manner as a transient cycle, with the exception that the reference speed value is constant. Record instantaneous and mean speed values over the cycle.

§ 1066.405 Vehicle preparation and preconditioning.

Prepare the vehicle for testing (including measurement of evaporative and refueling emissions if appropriate), as described in the standard-setting part.

EFFECTIVE DATE NOTE: At 86 FR 34582, June 29, 2021, § 1065.405 was revised, effective July 29, 2021.

§ 1066.410 Dynamometer test procedure.

(a) Dynamometer testing may consist of multiple drive cycles with both cold-start and hot-start portions, including prescribed soak times before each test interval. The standard-setting part identifies the driving schedules and the associated sample intervals, soak periods, engine startup and shutdown procedures, and operation of accessories, as applicable. Not every test interval includes all these elements.

(b) Place the vehicle onto the dynamometer without starting the engine (for any test cycles) or drive the vehicle onto the dynamometer (for hot-start and hot-running cycles only) and position a fan that directs cooling air to the vehicle during dynamometer operation as described in this paragraph (b). This generally requires squarely positioning the fan in front of the vehicle and directing the airflow to the vehicle's radiator. Use good engineering judgment to design and configure fans to cool the test vehicle in a way that properly simulates in-use operation, consistent with the specifications of § 1066.105. Except for the following special cases, use a road-speed modulated fan meeting the requirements of § 1066.105(c)(2) that is placed within 90 cm of the front of the vehicle and ensure that the engine compartment cover (*i.e.*, hood) is closed:

(1) For vehicles above 14,000 pounds GVWR, use a fan meeting the requirements of § 1066.105(d) that is placed within 90 cm of the front of the vehicle and ensure that the engine compartment cover is closed.

(2) For FTP, LA–92, US06, or HFET testing of vehicles at or below 14,000 pounds GVWR, you may use a fixed-speed fan as specified in the following table, with the engine compartment cover open:

TABLE 1 OF § 1066.410—FIXED-SPEED FAN CAPACITY AND POSITION SPECIFICATIONS FOR VEHICLES AT OR BELOW 14,000 POUNDS GVWR

Test cycle	Maximum fan capacity	Approximate distance from the front of the vehicle
FTP	Up to 2.50 m^3/s	0 to 30 cm.
US06	Up to 7.10 m^3/s	0 to 60 cm.
LA–92	Up to 7.10 m^3/s	0 to 60 cm.
HFET	Up to 2.50 m^3/s	0 to 30 cm.

(3) For SC03 and AC17 testing, use a road-speed modulated fan meeting the requirements of § 1066.105(c)(5) that is placed within 60 to 90 cm of the front of the vehicle and ensure that the engine compartment cover is closed. Position the discharge nozzle such that its lowest point is not more than 16 cm above the floor of the test cell.

(c) Record the vehicle's speed trace based on the time and speed data from the dynamometer at the recording frequencies given in Table 1 of § 1066.125. Record speed to at least the nearest 0.01 mi/hr and time to at least the nearest 0.1 s.

(d) You may perform practice runs for operating the vehicle and the dynamometer controls to meet the driving tolerances specified in § 1066.425 or adjust the emission sampling equipment. Verify that the accelerator pedal allows for enough control to closely follow the prescribed driving schedule. We recommend that you verify your ability to meet the minimum dilution factor requirements of

§ 1066.110(b)(2)(iii)(B) during these practice runs.

(e) Inflate tires on drive wheels according to the vehicle manufacturer's specifications. The tire pressure for drive wheels must be the same for dynamometer operation and for dynamometer coastdown procedures used for determining road-load coefficients. Report these measured tire pressure values with the test results.

(f) Tie down or load the test vehicle as needed to provide a normal force at the tire and dynamometer roll interface to prevent wheel slip. For vehicles above 14,000 pounds GVWR, report this measured force with the test results.

(g) Use good engineering judgment when testing vehicles in four-wheel drive or all-wheel drive mode. (For purposes of this paragraph (g), the term four-wheel drive includes other multiple drive-axle configurations.) This may involve testing on a dynamometer with a separate dynamometer roll for each drive axle; or two drive axles may use a single roll, as described in § 1066.210(d)(1); or you may deactivate the second set of drive wheels and operate the vehicle on a single roll. For all vehicles at or below 14,000 GVWR, we will test your vehicle using the same dynamometer roll arrangement that you used. We may also test your vehicle using another dynamometer roll arrangement for information-gathering purposes. If we choose to perform additional testing that requires vehicle modifications, we will ask you to configure the vehicle appropriately.

(h) Determine equivalent test weight as follows:

(1) For vehicles at or below 14,000 pounds GVWR, determine ETW as described in § 1066.805. Set dynamometer vehicle inertia, I, based on dynamometer type, as follows:

(i) For two-wheel drive dynamometers, set I = ETW.

(ii) For four-wheel drive dynamometers, set $I = 0.985 \cdot \text{ETW}$.

(2) For vehicles above 14,000 pounds GVWR, determine the vehicle's effective mass as described in § 1066.310 and use this as the test weight.

(i) Warm up the dynamometer as recommended by the dynamometer manufacturer.

(j) Following the test, determine the actual driving distance by counting the number of dynamometer roll or shaft revolutions, or by integrating speed over the course of testing from a high-resolution encoder system.

[79 FR 23823, Apr. 28, 2014, as amended at 80 FR 9121, Feb. 19, 2015; 81 FR 74202, Oct. 25, 2016]

§ 1066.415 Vehicle operation.

This section describes how to test a conventionally configured vehicle (vehicles with transmission shifters, foot pedal accelerators, etc). You may ask us to modify these procedures for vehicles that do not have these control features.

(a) Start the vehicle as follows:

(1) At the beginning of the test cycle, start the vehicle according to the procedure described in the owners manual. In the case of HEVs, this would generally involve activating vehicle systems such that the engine will start when the vehicle's control algorithms determine that the engine should provide power instead of or in addition to power from the rechargeable energy storage system (RESS). Unless we specify otherwise, engine starting throughout this part generally refers to this step of activating the system on HEVs, whether or not that causes the engine to start running.

(2) Place the transmission in gear as described by the test cycle in the standard-setting part. During idle operation, apply the brakes if necessary to keep the drive wheels from turning.

(b) If the vehicle does not start after your recommended maximum cranking time, wait and restart cranking according to your recommended practice. If you do not recommend such a cranking procedure, stop cranking after 10 seconds, wait for 10 seconds, then start cranking again for up to 10 seconds. You may repeat this for up to three start attempts. If the vehicle does not start after three attempts, you must determine and record the reason for failure to start. Shut off sampling systems and either turn the CVS off or disconnect the laboratory exhaust tubing from the tailpipe during the diagnostic period to prevent flow through

the exhaust system. Reschedule the vehicle for testing. This may require performing vehicle preparation and preconditioning if the testing needs to be rerun from a cold start. If failure to start occurs during a hot-start test, you may reschedule the hot-start test without repeating the cold-start test, as long as you bring the vehicle to a hot-start condition before starting the hot-start test.

(c) Repeat the recommended starting procedure if the engine has a false start (i.e., an incomplete start).

(d) Take the following steps if the engine stalls:

(1) If the engine stalls during an idle period, restart the engine immediately and continue the test. If you cannot restart the engine soon enough to allow the vehicle to follow the next acceleration, stop the driving schedule indicator and reactivate it when the vehicle restarts.

(2) Void the test if the vehicle stalls during vehicle operation. If this happens, remove the vehicle from the dynamometer, take corrective action, and reschedule the vehicle for testing. Record the reason for the malfunction (if determined) and any corrective action. See the standard-setting part for instructions about reporting these malfunctions.

(e) Operate vehicles during testing as follows:

(1) Where we do not give specific instructions, operate the vehicle according to the recommendations in the owners manual, unless those recommendations are unrepresentative of what may reasonably be expected for in-use operation.

(2) If vehicles have features that preclude dynamometer testing, you may modify these features as necessary to allow testing, consistent with good engineering judgment, as long as it does not affect your ability to demonstrate that your vehicles comply with the applicable standards. Send us written notification describing these changes along with supporting rationale.

(3) Operate vehicles during idle as follows:

(i) For vehicles with automatic transmission, operate at idle with the transmission in ''Drive'' with the wheels braked, except that you may shift to ''Neutral'' for the first idle period and for any idle period longer than one minute. If you put the vehicle in ''Neutral'' during an idle, you must shift the vehicle into ''Drive'' with the wheels braked at least 5 seconds before the end of the idle period. Note that this does not preclude vehicle designs involving engine shutdown during idle.

(ii) For vehicles with manual transmission, operate at idle with the transmission in gear with the clutch disengaged, except that you may shift to ''Neutral'' with the clutch engaged for the first idle period and for any idle period longer than one minute. If you put the vehicle in ''Neutral'' during idle, you must shift to first gear with the clutch disengaged at least 5 seconds before the end of the idle period. Note that this does not preclude vehicle designs involving engine operation with shutdown during idle.

(4) Operate the vehicle with the appropriate accelerator pedal movement necessary to follow the scheduled speeds in the driving schedule. Avoid smoothing speed variations and unnecessary movement of the accelerator pedal.

(5) Operate the vehicle smoothly, following representative shift speeds and procedures. For manual transmissions, the operator shall release the accelerator pedal during each shift and accomplish the shift without delay. If the vehicle cannot accelerate at the specified rate, operate it at maximum available power until the vehicle speed reaches the value prescribed in the driving schedule.

(6) Decelerate as follows:

(i) For vehicles with automatic transmission, use the brakes or accelerator pedal as necessary, without manually changing gears, to maintain the desired speed.

(ii) For vehicles with manual transmission, shift gears in a way that represents reasonable shift patterns for in-use operation, considering vehicle speed, engine speed, and any other relevant variables. Disengage the clutch when the speed drops below 15 mi/hr, when engine roughness is evident, or when good engineering judgment indicates the engine is likely to stall. Manufacturers may recommend shift guidance in the owners manual that differs

from the shift schedule used during testing, as long as both shift schedules are described in the application for certification; in this case, we may shift during testing as described in the owners manual.

[79 FR 23823, Apr. 28, 2016, as amended at 81 FR 74202, Oct. 25, 2016]

§ 1066.420 Test preparation.

(a) Follow the procedures for PM sample preconditioning and tare weighing as described in 40 CFR 1065.590 if you need to measure PM emissions.

(b) For vehicles above 14,000 pounds GVWR with compression-ignition engines, verify the amount of nonmethane hydrocarbon contamination as described in 40 CFR 1065.520(f).

(c) Unless the standard-setting part specifies different tolerances, verify at some point before the test that ambient conditions are within the tolerances specified in this paragraph (c). For purposes of this paragraph (c), ''before the test'' means any time from a point just prior to engine starting (excluding engine restarts) to the point at which emission sampling begins.

(1) Ambient temperature must be (20 to 30) °C. See § 1066.425(h) for circumstances under which ambient temperatures must remain within this range during the test.

(2) Dilution air conditions must meet the specifications in § 1066.110(b)(2). We recommend verifying dilution air conditions just before starting each test interval.

(d) Control test cell ambient air humidity as follows:

(1) For vehicles at or below 14,000 pounds GVWR, follow the humidity requirements in Table 1 of this section, unless the standard-setting part specifies otherwise. When complying with humidity requirements in the table, where no tolerance is specified, use good engineering judgment to maintain the humidity level near the specified value within the limitations of your test facility.

(2) For vehicles above 14,000 pounds GVWR, you may test vehicles at any humidity.

TABLE 1 OF § 1066.420—TEST CELL HUMIDITY REQUIREMENTS

Test cycle	Humidity requirement (grains H_2O per pound dry air)	Tolerance (grains H_2O per pound dry air)
AC17	69	±5 average, ±10 instantaneous.
FTP [1] and LA–92	50	
HFET	50	
SC03	100	±5.
US06	50	

[1] FTP humidity requirement does not apply for cold (−7 °C), intermediate (10 °C), and hot (35 °C) temperature testing.

(e) You may perform a final calibration of proportional-flow control systems, which may include performing practice runs.

(f) You may perform the following procedure to precondition sampling systems:

(1) Operate the vehicle over the test cycle.

(2) Operate any dilution systems at their expected flow rates. Prevent aqueous condensation in the dilution systems as described in 40 CFR 1065.140(c)(6), taking into account allowances given in § 1066.110(b)(2)(iv).

(3) Operate any PM sampling systems at their expected flow rates.

(4) Sample PM using any sample media. You may change sample media during preconditioning. You must discard preconditioning samples without weighing them.

(5) You may purge any gaseous sampling systems during preconditioning.

(6) You may conduct calibrations or verifications on any idle equipment or analyzers during preconditioning.

(g) Take the following steps before emission sampling begins:

(1) For batch sampling, connect clean storage media, such as evacuated bags or tare-weighed filters.

(2) Start all measurement instruments according to the instrument

manufacturer's instructions and using good engineering judgment.

(3) Start dilution systems, sample pumps, and the data-collection system.

(4) Pre-heat or pre-cool heat exchangers in the sampling system to within their operating temperature tolerances for a test.

(5) Allow heated or cooled components such as sample lines, filters, chillers, and pumps to stabilize at their operating temperatures.

(6) Adjust the sample flow rates to desired levels using bypass flow, if desired.

(7) Zero or re-zero any electronic integrating devices before the start of any test interval.

(8) Select gas analyzer ranges. You may not switch the gain of an analyzer's analog operational amplifier(s) during a test. However, you may switch (automatically or manually) gas analyzer ranges during a test if such switching changes only the range over which the digital resolution of the instrument is applied. For batch analyzers, select ranges before final bag analysis.

(9) Zero and span all continuous gas analyzers using gases that meet the specifications of 40 CFR 1065.750. For FID analyzers, you may account for the carbon number of your span gas either during the calibration process or when calculating your final emission value. For example, if you use a C_3H_8 span gas of concentration 200 ppm (μmol/mol), you may span the FID to respond with a value of 600 ppm (μmol/mol) of carbon or 200 ppm of propane. However, if your FID response is equivalent to propane, include a factor of three to make the final calculated hydrocarbon mass consistent with a molar mass of 13.875389. When utilizing an NMC–FID, span the FID analyzer consistent with the determination of their respective response factors, *RF*, and penetration fractions, *PF*, according to 40 CFR 1065.365.

(10) We recommend that you verify gas analyzer responses after zeroing and spanning by sampling a calibration gas that has a concentration near one-half of the span gas concentration. Based on the results, use good engineering judgment to decide whether or not to re-zero, re-span, or re-calibrate a gas analyzer before starting a test.

(11) If you correct for dilution air background concentrations of associated engine exhaust constituents, start sampling and recording background concentrations at the same time you start sampling exhaust gases.

(12) Turn on cooling fans immediately before starting the test.

(h) Proceed with the test sequence described in § 1066.425.

[79 FR 23823, Apr. 28, 2014, as amended at 80 FR 9121, Feb. 19, 2015]

EFFECTIVE DATE NOTE: At 86 FR 34582, June 29, 2021, § 1066.420 was amended, effective July 29, 2021.

§ 1066.425 Performing emission tests.

(a) See the standard-setting part for drive schedules. These are defined by a smooth fit of a specified speed vs. time sequence.

(b) The driver must attempt to follow the target schedule as closely as possible, consistent with the specifications in paragraph (b) of this section. Instantaneous speeds must stay within the following tolerances:

(1) The upper limit is 2.0 mi/hr higher than the highest point on the trace within 1.0 s of the given point in time.

(2) The lower limit is 2.0 mi/hr lower than the lowest point on the trace within 1.0 s of the given time.

(3) The same limits apply for vehicle operation without exhaust measurements, such as vehicle preconditioning and warm-up, except that the upper and lower limits for speed values are ±4.0 mi/hr. In addition, up to three occurrences of speed variations greater than the tolerance are acceptable for vehicle operation in which no exhaust emission standards apply, as long as they occur for less than 15 seconds on any occasion and are clearly documented as to the time and speed at that point of the driving schedule.

(4) Void the test if you do not maintain speed values as specified in this paragraph (b), except as allowed by this paragraph (b)(4). Speed variations (such as may occur during gear changes or braking spikes) may occur as follows, as long as such variations are clearly documented, including the time and speed values and the reason for the deviation:

(i) Speed variations greater than the specified limits are acceptable for up to 2.0 seconds on any occasion.

(ii) For vehicles that are not able to maintain acceleration as specified in §1066.415(e)(5), do not count the insufficient acceleration as being outside the specified limits.

(5) We may approve an alternate test cycle and cycle-validation criteria for vehicles that do not have enough power to follow the specified driving trace. The alternate driving specifications must be based on making best efforts to maintain acceleration and speed to follow the specified test cycle. We must approve these alternate driving specifications before you perform this testing.

(c) Figure 1 and Figure 2 of this section show the range of acceptable speed tolerances for typical points during testing. Figure 1 of this section is typical of portions of the speed curve that are increasing or decreasing throughout the 2-second time interval. Figure 2 of this section is typical of portions of the speed curve that include a maximum or minimum value.

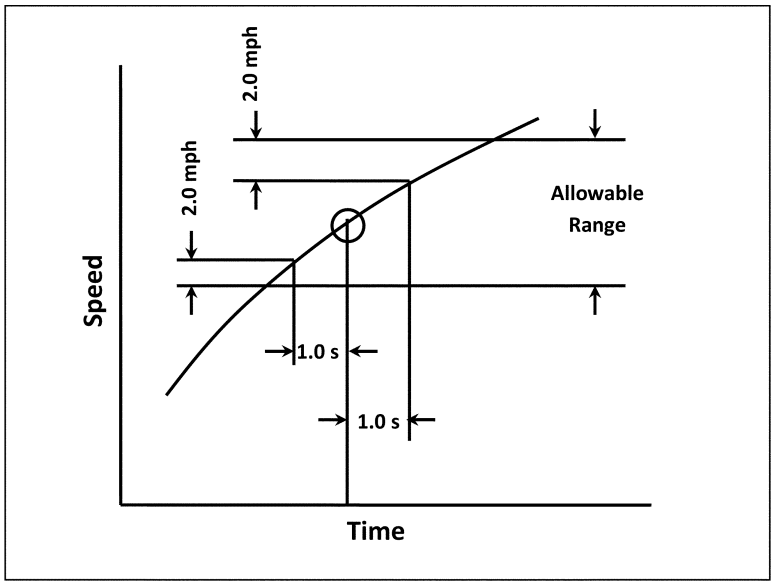

Figure 1 of § 1066.425—Example of the allowable ranges for the driver's trace

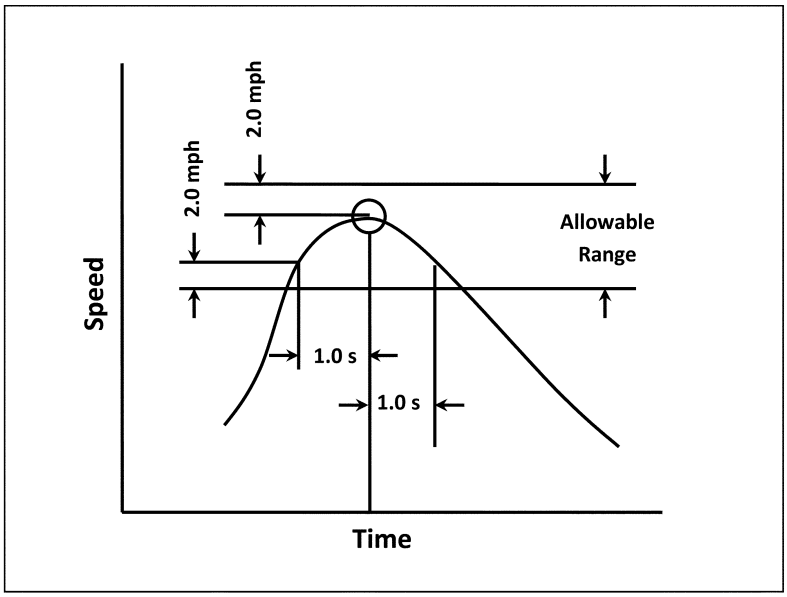

Figure 2 of § 1066.425—Example of the allowable ranges for the driver's trace

(d) Start testing as follows:

(1) If a vehicle is already running and warmed up, and starting is not part of the test cycle, operate the vehicle as follows:

(i) For transient test cycles, control vehicle speeds to follow a drive schedule consisting of a series of idles, accelerations, cruises, and decelerations.

(ii) For cruise test cycles, control the vehicle operation to match the speed of the first interval of the test cycle. Follow the instructions in the standard-setting part to determine how long to stabilize the vehicle during each interval, how long to sample emissions at each interval, and how to transition between intervals.

(2) If engine starting is part of the test cycle, start recording continuous data, turn on any electronic integrating devices, and start batch sampling before starting the engine. Initiate the driver's trace when the engine starts.

(e) Perform the following at the end of each test interval, except as specified in standard-setting part:

(1) Shut down the vehicle if it is part of the test cycle or if testing is complete.

(2) Continue to operate all sampling and dilution systems to allow the response times to elapse. Then stop all sampling and recording, including background sampling. Finally, stop any integrating devices and indicate the end of the duty cycle in the recorded data.

(f) If testing involves engine shutdown followed by another test interval, start a timer for the vehicle soak when the engine shuts down. Turn off cooling fans, close the engine compartment cover (if applicable), and turn off the CVS or disconnect the exhaust tube from the vehicle's tailpipe(s) unless otherwise instructed in the standard-setting part. If testing is complete, disconnect the laboratory exhaust tubing from the vehicle's tailpipe(s) and drive the vehicle from the dynamometer.

(g) Take the following steps after emission sampling is complete:

(1) For any proportional batch sample, such as a bag sample or PM sample, verify that proportional sampling was maintained according to 40 CFR

1065.545. Void any samples that did not maintain proportional sampling according to those specifications.

(2) Place any used PM samples into covered or sealed containers and return them to the PM-stabilization environment. Follow the PM sample post-conditioning and total weighing procedures in 40 CFR 1065.595.

(3) As soon as practical after the interval or test cycle is complete, or optionally during the soak period if practical, perform the following:

(i) Begin drift check for all continuous gas analyzers as described in paragraph (g)(5) of this section and zero and span all batch gas analyzers as soon as practical before any batch sample analysis. You may perform this batch analyzer zero and span before the end of the test interval.

(ii) Analyze any conventional gaseous batch samples (HC, CH_4, CO, NO_X, and CO_2) no later than 30 minutes after a test interval is complete, or during the soak period if practical. Analyze background samples no later than 60 minutes after the test interval is complete.

(iii) Analyze nonconventional gaseous batch samples (including background), such as NMHCE, N_2O, or NMOG sampling with ethanol, as soon as practicable using good engineering judgment.

(4) If an analyzer operated above 100% of its range at any time during the test, perform the following steps:

(i) For batch sampling, re-analyze the sample using the lowest analyzer range that results in a maximum instrument response below 100%. Report the result from the lowest range from which the analyzer operates below 100% of its range.

(ii) For continuous sampling, repeat the entire test using the next higher analyzer range. If the analyzer again operates above 100% of its range, repeat the test using the next higher range. Continue to repeat the test until the analyzer consistently operates at less than 100% of its range. Keep records of any tests where the analyzer exceeds its range. We may consider these results to determine that the test vehicle exceeded an emission standard, consistent with good engineering judgment.

(5) After quantifying exhaust gases, verify drift as follows:

(i) For batch and continuous gas analyzers, record the mean analyzer value after stabilizing a zero gas to the analyzer. Stabilization may include time to purge the analyzer of any sample gas, plus any additional time to account for analyzer response.

(ii) Record the mean analyzer value after stabilizing the span gas to the analyzer. Stabilization may include time to purge the analyzer of any sample gas, plus any additional time to account for analyzer response.

(iii) Use these data to verify that analyzer drift does not exceed 2.0% of the analyzer full scale.

(h) Measure and record ambient pressure. Measure and record ambient temperature continuously to verify that it remains within the temperature range specified in § 1066.420(c)(1) throughout the test. Also measure humidity if required, such as for correcting NO_X emissions, or meeting the requirements of § 1066.420(d).

(i) [Reserved]

(j) For vehicles at or below 14,000 pounds GVWR, determine overall driver accuracy as follows:

(1) Compare the following drive-cycle metrics, based on measured vehicle speeds, to a reference value based on the target cycle that would have been generated by driving exactly to the target trace as described in SAE J2951 (incorporated by reference in § 1066.1010):

(i) Determine the Energy Economy Rating as described in Section 5.4 of SAE J2951.

(ii) Determine the Absolute Speed Change Rating as described in Section 5.5 of SAE J2951.

(iii) Determine the Inertia Work Rating as described in Section 5.6 of SAE J2951.

(iv) Determine the phase-weighted composite Energy Based Drive Metrics for the criteria specified in this paragraph (j)(1) as described in Section 5.7 of SAE J2951.

(2) The standard-setting part may require you to give us 10 Hz data to characterize both target and actual values

for cycle energy. Calculate target values based on the vehicles speeds from the specified test cycle.

[79 FR 23823, Apr. 28, 2016, as amended at 81 FR 74203, Oct. 25, 2016]

Subpart F—Electric Vehicles and Hybrid Electric Vehicles

§ 1066.501 Overview.

Use the following procedures to test EVs and HEVs (including PHEVs):

(a) Correct the results for Net Energy Change of the RESS as follows:

(1) For all sizes of EVs, follow SAE J1634 (incorporated by reference in § 1066.1010).

(2) For HEVs at or below 14,000 pounds GVWR, follow SAE J1711 (incorporated by reference in § 1066.1010) except as described in this paragraph (a). Disregard provisions of SAE J1711 that differ from this part or the standard-setting part if they are not specific to HEVs. Apply the following adjustments and clarifications to SAE J1711:

(i) If the procedure calls for charge-sustaining operation, start the drive with a State of Charge that is appropriate to ensure charge-sustaining operation for the duration of the drive. Take steps other than emission measurements to confirm that vehicles are in charge-sustaining mode for the duration of the drive.

(ii) We may approve the use of the alternate End-of-Test criterion in Section 3.9.1 of SAE J1711 for charge-depleting tests and the Net Energy Change correction in Appendix C of SAE J1711 for charge-sustaining tests if the specified criterion and correction are insufficient or inappropriate.

(iii) For charge-sustaining tests Appendix C of SAE J1711 may be used to correct final fuel economy values, CO_2 emissions, and carbon-related exhaust emissions, but may not be used to correct measured values for criteria pollutant emissions.

(iv) You may test subject to a measurement accuracy of ±0.3% of full scale in place of the measurement accuracy specified in Section 4.2a of SAE J1711.

(3) For HEVs above 14,000 pounds GVWR, follow SAE J2711 (incorporated by reference in § 1066.1010) for requirements related to charge-sustaining operation.

(4) Use an integration frequency of 1 to 20 Hz for power analyzers to verify compliance with current and voltage specifications.

(b) This paragraph (b) applies for vehicles that include an engine-powered generator or other auxiliary power unit that provides motive power. For example, this would include a vehicle that has a small gasoline engine that generates electricity to charge batteries. Unless we approve otherwise, measure emissions for all test cycles when such an engine is operating. For each test cycle for which emissions are not measured, you must validate that such engines are not operating at any time during the test cycle.

(c) You may stop emission sampling anytime the engine is turned off, consistent with good engineering judgment. This is intended to allow for higher concentrations of dilute exhaust gases and more accurate measurements. Take steps to account for exhaust transport delay in the sampling system, and be sure to integrate over the actual sampling duration when determining V_{mix}.

[79 FR 23823, Apr. 28, 2014, as amended at 80 FR 9121, Feb. 19, 2015]

Subpart G—Calculations

§ 1066.601 Overview.

(a) This subpart describes calculations used to determine emission rates. See the standard-setting part and the other provisions of this part to determine which equations apply for your testing. This subpart describes how to—

(1) Use the signals recorded before, during, and after an emission test to calculate distance-specific emissions of each regulated pollutant.

(2) Perform calculations for calibrations and performance checks.

(3) Determine statistical values.

(b) You may use data from multiple systems to calculate test results for a single emission test, consistent with good engineering judgment. You may also make multiple measurements from a single batch sample, such as multiple weighing of a PM filter or multiple readings from a bag sample.

Although you may use an average of multiple measurements from a single test, you may not use test results from multiple emission tests to report emissions. We allow weighted means where appropriate, such as for sampling onto a PM filter over the FTP. You may discard statistical outliers, but you must report all results.

§ 1066.605 Mass-based and molar-based exhaust emission calculations.

(a) Calculate your total mass of emissions over a test cycle as specified in paragraph (c) of this section or in 40 CFR part 1065, subpart G, as applicable.

(b) See the standard-setting part for composite emission calculations over multiple test intervals and the corresponding weighting factors.

(c) Perform the following sequence of preliminary calculations to correct recorded concentration measurements before calculating mass emissions in paragraphs (e) and (f) of this section:

(1) For vehicles above 14,000 pounds GVWR, correct all THC and CH_4 concentrations for initial contamination as described in 40 CFR 1065.660(a), including continuous readings, sample bag readings, and dilution air background readings. This correction is optional for vehicles at or below 14,000 pounds GVWR.

(2) Correct all concentrations measured on a ''dry'' basis to a ''wet'' basis, including dilution air background concentrations.

(3) Calculate all NMHC and CH_4 concentrations, including dilution air background concentrations, as described in 40 CFR 1065.660.

(4) For vehicles at or below 14,000 pounds GVWR, calculate HC concentrations, including dilution air background concentrations, as described in this section, and as described in § 1066.635 for NMOG. For emission testing of vehicles above 14,000 pounds GVWR, with fuels that contain 25% or more oxygenated compounds by volume, calculate THCE and NMHC concentrations, including dilution air background concentrations, as described in 40 CFR part 1065, subpart I.

(5) Correct all gaseous concentrations for dilution air background as described in § 1066.610.

(6) Correct NO_X emission values for intake-air humidity as described in § 1066.615.

(7) Correct all PM filter masses for sample media buoyancy as described in 40 CFR 1065.690.

(d) Calculate g/mile emission rates using the following equation unless the standard-setting part specifies otherwise:

$$e_{[\text{emission}]} = \frac{m_{[\text{emission}]}}{D}$$

Eq. 1066.605-1

Where:

$e_{[\text{emission}]}$ = emission rate over the test interval.

$m_{[\text{emission}]}$ = emission mass over the test interval.

D = the measured driving distance over the test interval.

Example:

m_{NOx} = 0.3177 g

D_{HFET} = 10.19 miles

$$e_{NOx} = \frac{0.3177}{10.19} = 0.0312 \text{ g/mi}$$

(e) Calculate the emission mass of each gaseous pollutant using the following equation:

$$m_{[\text{emission}]} = V_{\text{mix}} \cdot \rho_{[\text{emission}]} \cdot x_{[\text{emission}]} \cdot c$$

Eq. 1066.605-2

Where:

$m_{[\text{emission}]}$ = emission mass over the test interval.

V_{mix} = total dilute exhaust volume over the test interval, corrected to standard reference conditions, and corrected for any volume removed for emission sampling and for any volume change from adding secondary dilution air.

$p_{[\text{emission}]}$ = density of the appropriate chemical species as given in § 1066.1005(f).

$x_{[\text{emission}]}$ = measured emission concentration in the sample, after dry-to-wet and background corrections.

c = 10^{-2} for emission concentrations in %, and 10^{-6} for emission concentrations in ppm.

Example:

V_{mix} = 170.878 m³ (from paragraph (f) of this section)

ρ_{NOx} = 1913 g/m³

x_{NOx} = 0.9721 ppm

$c = 10^{-6}$

$m_{\text{NOx}} = 170.878 \cdot 1913 \cdot 0.9721 \cdot 10^{-6} = 0.3177$ g

(f) Calculation of the emission mass of PM, m_{PM}, is dependent on how many PM filters you use, as follows:

(1) Except as otherwise specified in this paragraph (f), calculate m_{PM} using the following equation:

$$m_{\text{PM}} = \left(\frac{V_{\text{mix}}}{V_{\text{PMstd}} - V_{\text{sdastd}}} \right) \cdot \left(m_{\text{PMfil}} - m_{\text{PMbkgnd}} \right)$$

Eq. 1066.605-3

Where:

m_{PM} = mass of particulate matter emissions over the test interval, as described in § 1066.815(b)(1), (2), and (3).

V_{mix} = total dilute exhaust volume over the test interval, corrected to standard reference conditions, and corrected for any volume removed for emission sampling and for any volume change from adding secondary dilution air. For partial-flow dilution systems, set V_{mix} equal to the total exhaust volume over the test interval, corrected to standard reference conditions.

V_{PMstd} = total volume of dilute exhaust sampled through the filter over the test interval, corrected to standard reference conditions.

V_{sdastd} = total volume of secondary dilution air sampled through the filter over the test interval, corrected to standard reference conditions. For partial-flow dilution systems, set V_{sdastd} equal to total dilution air volume over the test interval, corrected to standard reference conditions.

m_{PMfil} = mass of particulate matter emissions on the filter over the test interval.

m_{PMbkgnd} = mass of particulate matter on the background filter.

Example:

V_{mix} = 170.878 m³ (from paragraph (g) of this section)

V_{PMstd} = 0.925 m³ (from paragraph (g) of this section)

V_{sdastd} = 0.527 m³ (from paragraph (g) of this section)

m_{PMfil} = 0.0000045 g

m_{PMbkgnd} = 0.0000014 g

$$m_{PM} = \left(\frac{170.878}{0.925 - 0.527}\right) \cdot \left(0.0000045 - 0.0000014\right) = 0.00133 \text{ g}$$

(2) If you sample PM onto a single filter as described in §1066.815(b)(4)(i) or (b)(4)(ii) (for constant volume samplers), calculate m_{PM} using the following equation:

$$m_{PM} = \left(\frac{V_{mix}}{\frac{\left(V_{ct\text{-}PMstd} - V_{ct\text{-}sdastd}\right)}{0.43} + \left(V_{s\text{-}PMstd} - V_{s\text{-}sdastd}\right) + \frac{\left(V_{ht\text{-}PMstd} - V_{ht\text{-}sdastd}\right)}{0.57}}\right) \cdot \left(m_{PMfil} - m_{PMbkgnd}\right)$$

Eq. 1066.605-4

Where:

m_{PM} = mass of particulate matter emissions over the entire FTP.

V_{mix} = total dilute exhaust volume over the test interval, corrected to standard reference conditions, and corrected for any volume removed for emission sampling and for any volume change from adding secondary dilution air.

$V_{[interval]\text{-}PMstd}$ = total volume of dilute exhaust sampled through the filter over the test interval (ct = cold transient, s = stabilized, ht = hot transient), corrected to standard reference conditions.

$V_{[interval]\text{-}sdastd}$ = total volume of secondary dilution air sampled through the filter over the test interval (ct = cold transient, s = stabilized, ht = hot transient), corrected to standard reference conditions.

m_{PMfil} = mass of particulate matter emissions on the filter over the test interval.

$m_{PMbkgnd}$ = mass of particulate matter on the background filter over the test interval.

Example:

V_{mix} = 633.691 m^3

$V_{ct\text{-}PMstd}$ = 0.925 m^3

$V_{ct\text{-}sdastd}$ = 0.527 m^3

$V_{s\text{-}PMstd}$ = 1.967 m^3

$V_{s\text{-}sdastd}$ = 1.121 m^3

$V_{ht\text{-}PMstd}$ = 1.122 m^3

$V_{ht\text{-}sdastd}$ = 0.639 m^3

m_{PMfil} = 0.0000106 g

$m_{PMbkgnd}$ = 0.0000014 g

$$m_{PM} = \left(\frac{633.691}{\frac{\left(0.925 - 0.527\right)}{0.43} + \left(1.967 - 1.121\right) + \frac{\left(1.122 - 0.639\right)}{0.57}}\right) \cdot \left(0.0000106 - 0.0000014\right)$$

m_{PM} = 0.00222 g

(3) If you sample PM onto a single filter as described in §1066.815(b)(4)(ii) (for partial flow dilution systems), calculate m_{PM} using the following equation:

$$m_{PM} = \left(\frac{\frac{0.43 \cdot V_{ct\text{-}exhstd}}{V_{ct\text{-}PMstd} - V_{ct\text{-}dilstd}} + \frac{V_{s\text{-}exhstd}}{V_{s\text{-}PMstd} - V_{s\text{-}dilstd}} + \frac{0.57 \cdot V_{ht\text{-}exhstd}}{V_{ht\text{-}PMstd} - V_{ht\text{-}dilstd}}}{3} \right) \cdot \left(m_{PMfil} - m_{PMbkgnd} \right)$$

Eq. 1066.605-5

Where:

m_{PM} = mass of particulate matter emissions over the entire FTP.

$V_{[interval]\text{-}exhstd}$ = total engine exhaust volume over the test interval (ct = cold transient, s = stabilized, ht = hot transient), corrected to standard reference conditions, and corrected for any volume removed for emission sampling.

$V_{[interval]\text{-}PMstd}$ = total volume of dilute exhaust sampled through the filter over the test interval (ct = cold transient, s = stabilized, ht = hot transient), corrected to standard reference conditions.

$V_{[interval]\text{-}dilstd}$ = total volume of dilution air over the test interval (ct = cold transient, s = stabilized, ht = hot transient), corrected to standard reference conditions and for any volume removed for emission sampling.

m_{PMfil} = mass of particulate matter emissions on the filter over the test interval.

$m_{PMbkgnd}$ = mass of particulate matter on the background filter over the test interval.

Example:

$V_{ct\text{-}exhstd}$ = 5.55 m^3
$V_{ct\text{-}PMstd}$ = 0.526 m^3
$V_{ct\text{-}dilstd}$ = 0.481 m^3
$V_{s\text{-}exhstd}$ = 9.53 m^3
$V_{s\text{-}PMstd}$ = 0.903 m^3
$V_{s\text{-}dilstd}$ = 0.857 m^3
$V_{ht\text{-}exhstd}$ = 5.54 m^3
$V_{ht\text{-}PMstd}$ = 0.527 m^3
$V_{ht\text{-}dilstd}$ = 0.489 m^3
m_{PMfil} = 0.0000106 g
$m_{PMbkgnd}$ = 0.0000014 g

$$m_{PM} = \left(\frac{\frac{0.43 \cdot 5.55}{0.526 - 0.481} + \frac{9.53}{0.903 - 0.857} + \frac{0.57 \cdot 5.54}{0.527 - 0.489}}{3} \right) \cdot \left(0.0000106 - 0.0000014 \right)$$

m_{PM} = 0.00269 g

(4) If you sample PM onto a single filter as described in §1066.815(b)(5)(i) or (b)(5)(ii) (for constant volume samplers), calculate m_{PM} using the following equation:

$$m_{PM} = \left(\frac{V_{mix}}{\frac{\left(V_{ct\text{-}PMstd} - V_{ct\text{-}sdastd}\right) + \left(V_{cs\text{-}PMstd} - V_{cs\text{-}sdastd}\right)}{0.43} + \frac{\left(V_{ht\text{-}PMstd} - V_{ht\text{-}sdastd}\right) + \left(V_{hs\text{-}PMstd} - V_{hs\text{-}sdastd}\right)}{0.57}} \right) \cdot \left(m_{PMfil} - m_{PMbkgnd} \right)$$

Eq. 1066.605-6

Where:

m_{PM} = mass of particulate matter emissions over the entire FTP.

V_{mix} = total dilute exhaust volume over the test interval, corrected to standard reference conditions, and corrected for any volume removed for emission sampling

and for any volume change from secondary dilution air.

$V_{[interval]\text{-}PMstd}$ = total volume of dilute exhaust sampled through the filter over the test interval (ct = cold transient, cs = cold stabilized, ht = hot transient, hs = hot stabilized), corrected to standard reference conditions.

$V_{[interval]\text{-}sdastd}$ = total volume of secondary dilution air sampled through the filter over the test interval (ct = cold transient, cs = cold stabilized, ht = hot transient, hs = hot stabilized), corrected to standard reference conditions.

m_{PMfil} = mass of particulate matter emissions on the filter over the test interval.

$m_{PMbkgnd}$ = mass of particulate matter on the background filter over the test interval.

Example:

V_{mix} = 972.121 m³
$V_{ct\text{-}PMstd}$ = 0.925 m³
$V_{ct\text{-}sdastd}$ = 0.529 m³
$V_{cs\text{-}PMstd}$ = 1.968 m³
$V_{cs\text{-}sdastd}$ = 1.123 m³
$V_{ht\text{-}PMstd}$ = 1.122 m³
$V_{ht\text{-}sdastd}$ = 0.641 m³
$V_{hs\text{-}PMstd}$ = 1.967 m³
$V_{hs\text{-}sdastd}$ = 1.121 m³
m_{PMfil} = 0.0000229 g
$m_{PMbkgnd}$ = 0.0000014 g

$$m_{PM} = \left(\frac{972.121}{\frac{(0.925-0.529)+(1.968-1.123)}{0.43} + \frac{(1.122-0.641)+(1.967-1.121)}{0.57}} \right) \cdot (0.0000229 - 0.0000014)$$

m_{PM} = 0.00401 g

(5) If you sample PM onto a single filter as described in § 1066.815(b)(5)(ii) (for partial flow dilution systems), calculate m_{PM} using the following equation:

$$m_{PM} = \left(\frac{0.43 \cdot \left(\frac{V_{ct\text{-}exhstd} + V_{cs\text{-}exhstd}}{V_{ct\text{-}PMstd} - V_{ct\text{-}dilstd} + V_{cs\text{-}PMstd} - V_{cs\text{-}dilstd}} \right) + 0.57 \cdot \left(\frac{V_{ht\text{-}exhstd} + V_{hs\text{-}exhstd}}{V_{ht\text{-}PMstd} - V_{ht\text{-}dilstd} + V_{hs\text{-}PMstd} - V_{hs\text{-}dilstd}} \right)}{2} \right) \cdot (m_{PMfil} - m_{PMbkgnd})$$

Eq. 1066.605-7

Where:

m_{PM} = mass of particulate matter emissions over the entire FTP.

$V_{[interval]\text{-}exhstd}$ = total engine exhaust volume over the test interval (ct = cold transient, cs = cold stabilized, ht = hot transient, hs = hot stabilized), corrected to standard reference conditions, and corrected for any volume removed for emission sampling.

$V_{[interval]\text{-}PMstd}$ = total volume of dilute exhaust sampled through the filter over the test interval (ct = cold transient, cs = cold stabilized, ht = hot transient, hs = hot stabilized), corrected to standard reference conditions.

$V_{[interval]\text{-}dilstd}$ = total volume of dilution air over the test interval (ct = cold transient, cs = cold stabilized, ht = hot transient, hs = hot stabilized), corrected to standard reference conditions and for any volume removed for emission sampling.

m_{PMfil} = mass of particulate matter emissions on the filter over the test interval.

$m_{PMbkgnd}$ = mass of particulate matter on the background filter over the test interval.

Example:

$V_{ct\text{-}exhstd}$ = 5.55 m³
$V_{ct\text{-}PMstd}$ = 0.526 m³
$V_{ct\text{-}dilstd}$ = 0.481 m³
$V_{cs\text{-}exhstd}$ = 9.53 m³
$V_{cs\text{-}PMstd}$ = 0.903 m³
$V_{cs\text{-}dilstd}$ = 0.857 m³
$V_{ht\text{-}exhstd}$ = 5.54 m³
$V_{ht\text{-}PMstd}$ = 0.527 m³
$V_{ht\text{-}dilstd}$ = 0.489 m³
$V_{hs\text{-}exhstd}$ = 9.54 m³
$V_{hs\text{-}PMstd}$ = 0.902 m³
$V_{hs\text{-}dilstd}$ = 0.856 m³
m_{PMfil} = 0.0000229 g
$m_{PMbkgnd}$ = 0.0000014 g

$$m_{PM} = \left(\frac{0.43 \cdot \left(\frac{5.55 + 9.53}{0.526 - 0.481 + 0.903 - 0.857} \right) + 0.57 \cdot \left(\frac{5.54 + 9.54}{0.527 - 0.489 + 0.902 - 0.856} \right)}{2} \right) \cdot (0.0000229 - 0.0000014)$$

m_{PM} = 0.00266 g

(g) This paragraph (g) describes how to correct flow and flow rates to standard reference conditions and provides an example for determining V_{mix} based on CVS total flow and the removal of sample flow from the dilute exhaust gas. You may use predetermined nominal values for removed sample volumes, except for flows used for batch sampling.

(1) Correct flow and flow rates to standard reference conditions as needed using the following equation:

$$V_{[flow]std} = \frac{V_{[flow]act} \cdot p_{in} \cdot T_{std}}{p_{std} \cdot T_{in}}$$

Eq. 1066.605-8

Where:

$V_{[flow]std}$ = total flow volume at the flow meter, corrected to standard reference conditions.

$V_{[flow]act}$ = total flow volume at the flow meter at test conditions.

p_{in} = absolute static pressure at the flow meter inlet, measured directly or calculated as the sum of atmospheric pressure plus a differential pressure referenced to atmospheric pressure.

T_{std} = standard temperature.

p_{std} = standard pressure.

T_{in} = temperature of the dilute exhaust sample at the flow meter inlet.

Example:

V_{PMact} = 1.071 m^3

p_{in} = 101.7 kPa

T_{std} = 293.15 K

p_{std} = 101.325 kPa

T_{in} = 340.5 K

$$V_{PMstd} = \frac{1.071 \cdot 101.7 \cdot 293.15}{101.325 \cdot 340.5} = 0.925 \text{ m}^3$$

(2) The following example provides a determination of V_{mix} based on CVS total flow and the removal of sample flow from one dilute exhaust gas analyzer and one PM sampling system that is utilizing secondary dilution. Note that your V_{mix} determination may vary from Eq. 1066.605–7 based on the number of flows that are removed from your dilute exhaust gas and whether your PM sampling system is using secondary dilution. For this example, V_{mix} is governed by the following equation:

$$V_{mix} = V_{CVSstd} + V_{gasstd} + V_{PMstd} - V_{sdastd}$$

Eq. 1066.605-9

Where:

V_{CVSstd} = total dilute exhaust volume over the test interval at the flow meter, corrected to standard reference conditions.

V_{gasstd} = total volume of sample flow through the gaseous emission bench over the test interval, corrected to standard reference conditions.

V_{PMstd} = total volume of dilute exhaust sampled through the filter over the test interval, corrected to standard reference conditions.

V_{sdastd} = total volume of secondary dilution air flow sampled through the filter over the test interval, corrected to standard reference conditions.

Example:

Using Eq. 1066.605–8:

V_{CVSstd} = 170.451 m³, where V_{CVSact} = 170.721 m³, p_{in} = 101.7 kPa, and T_{in} = 294.7 K

Using Eq. 1066.605–8:

V_{gasstd} = 0.028 m³, where V_{gasact} = 0.033 m³, p_{in} = 101.7 kPa, and T_{in} = 340.5 K

Using Eq. 1066.605–8:

V_{PMstd} = 0.925 m³, where V_{PMact} = 1.071 m³, p_{in} = 101.7 kPa, and T_{in} = 340.5 K

Using Eq. 1066.605–8:

V_{sdastd} = 0.527 m³, where V_{sdaact} = 0.531 m³, p_{in} = 101.7 kPa, and T_{in} = 296.3 K

V_{mix} = 170.451 + 0.028 + 0.925 − 0.527 = 170.878 m³

(h) Calculate total flow volume over a test interval, $V_{[flow]}$, for a CVS or exhaust gas sampler as follows:

(1) *Varying versus constant flow rates.* The calculation methods depend on differentiating varying and constant flow, as follows:

(i) We consider the following to be examples of varying flows that require a continuous multiplication of concentration times flow rate: raw exhaust, exhaust diluted with a constant flow rate of dilution air, and CVS dilution with a CVS flow meter that does not have an upstream heat exchanger or electronic flow control.

(ii) We consider the following to be examples of constant exhaust flows: CVS diluted exhaust with a CVS flow meter that has an upstream heat exchanger, an electronic flow control, or both.

(2) *Continuous sampling.* For continuous sampling, you must frequently record a continuously updated flow signal. This recording requirement applies for both varying and constant flow rates.

(i) *Varying flow rate.* If you continuously sample from a varying exhaust flow rate, calculate $V_{[flow]}$ using the following equation:

$$V_{[flow]} = \sum_{i=1}^{N} \dot{Q}_i \cdot \Delta t$$

Eq. 1066.605-10

Where:

$$\Delta t = 1/f_{record}$$

Eq. 1066.605-11

Example:

N = 505

$\dot{Q}_{CVS1}$ = 0.276 m³/s

$\dot{Q}_{CVS2}$ = 0.294 m³/s

f_{record} = 1 Hz

Using Eq. 1066.605–11,

Δt = 1/1 = 1 s

$V_{CVS} = (0.276 + 0.294 + \ldots + \dot{Q}_{CVS505}) \cdot 1$

V_{CVS} = 170.721 m³

(ii) *Constant flow rate.* If you continuously sample from a constant exhaust flow rate, use the same calculation described in paragraph (h)(2)(i) of this section or calculate the mean flow recorded over the test interval and treat

the mean as a batch sample, as described in paragraph (h)(3)(ii) of this section.

(3) *Batch sampling*. For batch sampling, calculate total flow by integrating a varying flow rate or by determining the mean of a constant flow rate, as follows:

(i) *Varying flow rate*. If you proportionally collect a batch sample from a varying exhaust flow rate, integrate the flow rate over the test interval to determine the total flow from which you extracted the proportional sample, as described in paragraph (h)(2)(i) of this section.

(ii) *Constant flow rate*. If you batch sample from a constant exhaust flow rate, extract a sample at a proportional or constant flow rate and calculate $V_{[flow]}$ from the flow from which you extract the sample by multiplying the mean flow rate by the time of the test interval using the following equation:

$$V_{[flow]} = \overline{\dot{Q}} \cdot \Delta t$$

Eq. 1066.605-12

Example:

$\overline{\dot{Q}}_{CVS}$ = 0.338 m³/s
Δt = 505 s
V_{CVS} = 0.338·505
V_{CVS} = 170.69 m³

[79 FR 23823, Apr. 28, 2014, as amended at 80 FR 9121, Feb. 19, 2015; 81 FR 74203, Oct. 25, 2016]

EFFECTIVE DATE NOTE: At 86 FR 34583, June 29, 2021, § 1066.605 was amended, effective July 29, 2021.

§ 1066.610 Dilution air background correction.

(a) Correct the emissions in a gaseous sample for background using the following equation:

$$x_{[emission]} = x_{[emission]dexh} - x_{[emission]bkgnd} \cdot \left(1 - \left(\frac{1}{DF}\right)\right)$$

Eq. 1066.610-1

Where:

$x_{[emission]dexh}$ = measured emission concentration in dilute exhaust (after dry-to-wet correction, if applicable).

$x_{[emission]bkgnd}$ = measured emission concentration in the dilution air (after dry-to-wet correction, if applicable).

DF = dilution factor, as determined in paragraph (b) of this section.

Example:

$x_{NOxdexh}$ = 1.08305 ppm

$x_{NOxbkgnd}$ = 0.12456 ppm

DF = 9.14506

$$x_{NOx} = 1.08305 - 0.12456 \cdot \left(1 - \left(\frac{1}{9.14506}\right)\right) = 0.97211 \text{ ppm}$$

(b) Except as specified in paragraph (c) of this section, determine the dilution factor, DF, over the test interval using the following equation:

$$DF = \frac{1}{\left(1 + \frac{\alpha}{2} + 3.76 \cdot \left(1 + \frac{\alpha}{4} - \frac{\beta}{2}\right)\right) \cdot (x_{CO2} + x_{NMHC} + x_{CH4} + x_{CO})}$$

Eq. 1066.610-2

Where:

x_{CO2} = amount of CO_2 measured in the sample over the test interval.

x_{NMHC} = amount of C_1-equivalent NMHC measured in the sample over the test interval.

x_{CH4} = amount of CH_4 measured in the sample over the test interval.

x_{CO} = amount of CO measured in the sample over the test interval.

α = atomic hydrogen-to-carbon ratio of the test fuel. You may measure α or use default values from Table 1 of 40 CFR 1065.655.

β = atomic oxygen-to-carbon ratio of the test fuel. You may measure β or use default values from Table 1 of 40 CFR 1065.655.

Example:

x_{CO2} = 1.456 % = 0.01456

x_{NMHC} = 0.84 ppm = 0.00000084

x_{CH4} = 0.26 ppm = 0.00000026

x_{CO} = 80.4 ppm = 0.0000804

$\alpha = 1.92$

$\beta = 0.03$

$$DF = \frac{1}{\left(1+\frac{1.92}{2}+3.76\cdot\left(1+\frac{1.92}{4}-\frac{0.03}{2}\right)\right)\cdot\left(0.01456+0.00000084+0.00000026+0.0000804\right)} = 9.14506$$

(c) Determine the dilution factor, DF, over the test interval for partial-flow dilution sample systems using the following equation:

$$DF = \frac{V_{\text{dexhstd}}}{V_{\text{exhstd}}}$$

Eq. 1066.610-3

Where:

V_{dexhstd} = total dilute exhaust volume sampled over the test interval, corrected to standard reference conditions.

V_{exhstd} = total exhaust volume sampled from the vehicle, corrected to standard reference conditions.

Example:

V_{dexhstd} = 170.9 m^3

V_{exhstd} = 15.9 m^3

$$DF = \frac{170.9}{15.4} = 11.1$$

(d) Determine the time-weighted dilution factor, DF_w, over the duty cycle using the following equation:

$$DF_w = \frac{\sum_{i=1}^{N} t_i}{\sum_{i=1}^{N} \frac{1}{DF_i} \cdot t_i}$$

Eq. 1066.610-4

Where:

N = number of test intervals.

i = test interval number

t = duration of the test interval.

DF = dilution factor over the test interval.

Example:

$$N = 3$$

$$DF_1 = 14.40$$

$$t_1 = 505 \text{ s}$$

$$DF_2 = 24.48$$

$$t_2 = 867 \text{ s}$$

$$DF_3 = 17.28$$

$$t_3 = 505 \text{ s}$$

$$DF_w = \frac{505 + 867 + 505}{\left(\frac{1}{14.40} \cdot 505\right) + \left(\frac{1}{24.48} \cdot 867\right) + \left(\frac{1}{17.28} \cdot 505\right)} = 18.82$$

EFFECTIVE DATE NOTE: At 86 FR 34583, June 29, 2021, § 1066.610 was amended, effective July 29, 2021.

§ 1066.615 NO_X intake-air humidity correction.

You may correct NO_X emissions for intake-air humidity as described in this section if the standard-setting part allows it. See § 1066.605(c) for the

proper sequence for applying the NO_X intake-air humidity correction.

(a) For vehicles at or below 14,000 pounds GVWR, apply a correction for vehicles with reciprocating engines operating over specific test cycles as follows:

(1) Calculate a humidity correction using a time-weighted mean value for ambient humidity over the test interval. Calculate absolute ambient humidity, H, using the following equation:

$$H = \frac{1000 \cdot M_{\mathrm{H2O}} \cdot p_{\mathrm{d}} \cdot RH}{M_{\mathrm{air}} \cdot \left(p_{\mathrm{atmos}} - p_{\mathrm{d}} \cdot RH\right)}$$

Eq. 1066.615-1

Where:

M_{H2O} = molar mass of H_2O.

p_{d} = saturated vapor pressure at the ambient dry bulb temperature.

RH = relative humidity of ambient air

M_{air} = molar mass of air.

p_{atmos} = atmospheric pressure.

Example:

M_{H2O} = 18.01528 g/mol

p_{d} = 2.93 kPa

RH = 37.5% = 0.375

M_{air} = 28.96559 g/mol

p_{atmos} = 96.71 kPa

$$H = \frac{1000 \cdot 18.01528 \cdot 2.93 \cdot 0.375}{28.96559 \cdot \left(96.71 - 2.93 \cdot 0.375\right)} = 7.14741 \text{ g } H_2O \text{ vapor/kg dry air}$$

(2) Use the following equation to correct measured concentrations to a reference condition of 10.71 grams H_2O vapor per kilogram of dry air for the FTP, US06, LA–92, SC03, and HFET test cycles:

$$x_{\mathrm{NOxcor}} = x_{\mathrm{NOx}} \cdot \frac{H_{\mathrm{s}}}{1 - 0.0329 \cdot \left(H - 10.71\right)}$$

Eq. 1066.615-2

Where:

χ_{NOx} = measured NO_X emission concentration in the sample, after dry-to-wet and background corrections.

H_{s} = humidity scale. Set = 1 for FTP, US06, LA–92, and HFET test cycles. Set = 0.8825 for the SC03 test cycle.

H = ambient humidity, as determined in paragraph (a)(1) of this section.

Example:

H = 7.14741 g H_2O vapor/kg dry air time weighted over the FTP test cycle

χ_{NOx} = 1.21 ppm

$$x_{\mathrm{NOxcor}} = 1.21 \cdot \frac{1}{1 - 0.0329 \cdot \left(7.14741 - 10.71\right)} = 1.08305 \text{ ppm}$$

(b) For vehicles above 14,000 pounds GVWR, apply correction factors as described in 40 CFR 1065.670.

[80 FR 9121, Feb. 19, 2015, as amended at 81 FR 74207, Oct. 25, 2016]

§ 1066.620 Removed water correction.

Correct for removed water if water removal occurs upstream of a concentration measurement and downstream of a flow meter used to determine mass emissions over a test interval. Perform this correction based on the amount of water at the concentration measurement and on the amount of water at the flow meter.

§ 1066.625 Flow meter calibration calculations.

This section describes the calculations for calibrating various flow meters based on mass flow rates. Calibrate your flow meter according to 40 CFR 1065.640 instead if you calculate emissions based on molar flow rates.

(a) *PDP calibration*. Perform the following steps to calibrate a PDP flow meter:

(1) Calculate PDP volume pumped per revolution, V_{rev}, for each restrictor position from the mean values determined in § 1066.140:

$$V_{rev} = \frac{\overline{\dot{V}}_{ref} \cdot \overline{T}_{in} \cdot p_{std}}{\overline{f}_{nPDP} \cdot \overline{p}_{in} \cdot T_{std}}$$

Eq. 1066.625-1

Where:

$\overline{\dot{V}}_{ref}$ = mean flow rate of the reference flow meter.

$\overline{T}_{in}$ = mean temperature at the PDP inlet.

p_{std} = standard pressure = 101.325 kPa.

$\overline{f}_{nPDP}$ = mean PDP speed.

$\overline{P}_{in}$ = mean static absolute pressure at the PDP inlet.

T_{std} = standard temperature = 293.15 K.

Example:

$\overline{\dot{V}}_{ref}$ = 0.1651 m³/s

$\overline{T}_{in}$ = 299.5 K

p_{std} = 101.325 kPa

$\overline{f}_{nPDP}$ = 1205.1 r/min = 20.085 r/s

$\overline{P}_{in}$ = 98.290 kPa

T_{std} = 293.15 K

$$V_{rev} = \frac{0.1651 \cdot 299.5 \cdot 101.3}{20.085 \cdot 98.290 \cdot 293.15}$$

V_{rev} = 0.00866 m³/r

(2) Calculate a PDP slip correction factor, K_s for each restrictor position from the mean values determined in § 1066.140:

$$K_s = \frac{1}{\overline{f}_{nPDP}} \cdot \sqrt{\frac{\overline{p}_{out} - \overline{p}_{in}}{\overline{p}_{out}}}$$

Eq. 1066.625-2

Where:

$\overline{f}_{nPDP}$ = mean PDP speed.

$\overline{p}_{out}$ = mean static absolute pressure at the PDP outlet.

$\bar{p}_{in}$ = mean static absolute pressure at the PDP inlet.

Example:

$$\bar{f}_{nPDP} = 1205.1 \text{ r/min} = 20.085 \text{ r/s}$$

$$\bar{p}_{out} = 100.103 \text{ kPa}$$

$$\bar{p}_{in} = 98.290 \text{ kPa}$$

$$K_s = \frac{1}{20.085} \cdot \sqrt{\frac{100.103 - 98.290}{100.103}}$$

$$K_s = 0.006700 \text{ s/r}$$

(3) Perform a least-squares regression of V_{rev}, versus K_s, by calculating slope, a_1, and intercept, a_0, as described in 40 CFR 1065.602.

(4) Repeat the procedure in paragraphs (a)(1) through (3) of this section for every speed that you run your PDP.

(5) The following example illustrates a range of typical values for different PDP speeds:

TABLE 1 OF § 1066.625—EXAMPLE OF PDP CALIBRATION DATA

$\bar{f}_{nPDP}$ (revolution/s)	a_1 (m^3/s)	a_0 (m^3/revolution)
12.6	0.841	0.056
16.5	0.831	−0.013
20.9	0.809	0.028
23.4	0.788	−0.061

(6) For each speed at which you operate the PDP, use the appropriate regression equation from this paragraph (a) to calculate flow rate during emission testing as described in § 1066.630.

(b) *SSV calibration.* The equations governing SSV flow assume one-dimensional isentropic inviscid flow of an ideal gas. Paragraph (b)(2)(iv) of this section describes other assumptions that may apply. If good engineering judgment dictates that you account for gas compressibility, you may either use an appropriate equation of state to determine values of Z as a function of measured pressure and temperature, or you may develop your own calibration equations based on good engineering judgment. Note that the equation for the flow coefficient, C_f, is based on the ideal gas assumption that the isentropic exponent, γ, is equal to the ratio of specific heats, C_p/C_v. If good engineering judgment dictates using a real gas isentropic exponent, you may either use an appropriate equation of state to determine values of γ as a function of measured pressure and temperature, or you may develop your own calibration equations based on good engineering judgment.

(1) Calculate volume flow rate at standard reference conditions, $\dot{V}_{std}$, as follows

$$\dot{V}_{\mathrm{std}} = C_{\mathrm{d}} \cdot C_{\mathrm{f}} \cdot \frac{A_{\mathrm{t}} \cdot R \cdot p_{\mathrm{in}} \cdot T_{\mathrm{std}}}{p_{\mathrm{std}} \cdot \sqrt{Z \cdot M_{\mathrm{mix}} \cdot R \cdot T_{\mathrm{in}}}}$$

Eq. 1066.625-3

Where:

C_{d} = discharge coefficient, as determined in paragraph (b)(2)(i) of this section.

C_{f} = flow coefficient, as determined in paragraph (b)(2)(ii) of this section.

A_{t} = cross-sectional area at the venturi throat.

R = molar gas constant.

p_{in} = static absolute pressure at the venturi inlet.

T_{std} = standard temperature.

p_{std} = standard pressure.

Z = compressibility factor.

M_{mix} = molar mass of gas mixture.

T_{in} = absolute temperature at the venturi inlet.

(2) Perform the following steps to calibrate an SSV flow meter:

(i) Using the data collected in §1066.140, calculate C_{d} for each flow rate using the following equation:

$$C_{\mathrm{d}} = \dot{V}_{\mathrm{ref}} \cdot \frac{p_{\mathrm{std}} \cdot \sqrt{Z \cdot M_{\mathrm{mix}} \cdot R \cdot T_{\mathrm{in}}}}{C_{\mathrm{f}} \cdot A_{\mathrm{t}} \cdot R \cdot p_{\mathrm{in}} \cdot T_{\mathrm{std}}}$$

Eq. 1066.625-4

Where:

$\dot{V}_{\mathrm{ref}}$ = measured volume flow rate from the reference flow meter.

(ii) Use the following equation to calculate C_{f} for each flow rate:

$$C_{\mathrm{f}} = \left[\frac{2 \cdot \gamma \cdot \left(r^{\frac{\gamma-1}{\gamma}} - 1 \right)}{(\gamma - 1) \cdot \left(\beta^4 - r^{\frac{-2}{\gamma}} \right)} \right]^{\frac{1}{2}}$$

Where:

γ = isentropic exponent. For an ideal gas, this is the ratio of specific heats of the gas mixture, $C_{\mathrm{p}}/C_{\mathrm{v}}$.

r = pressure ratio, as determined in paragraph (b)(2)(iii) of this section.

β = ratio of venturi throat diameter to inlet diameter.

(iii) Calculate r using the following equation:

$$r = 1 - \frac{\Delta p}{p_{in}}$$

Eq. 1066.625-6

Where:

Δp = differential static pressure, calculated as venturi inlet pressure minus venturi throat pressure.

(iv) You may apply any of the following simplifying assumptions or develop other values as appropriate for your test configuration, consistent with good engineering judgment:

(A) For raw exhaust, diluted exhaust, and dilution air, you may assume that the gas mixture behaves as an ideal gas ($Z = 1$).

(B) For raw exhaust, you may assume $\gamma = 1.385$.

(C) For diluted exhaust and dilution air, you may assume $\gamma = 1.399$.

(D) For diluted exhaust and dilution air, you may assume the molar mass of the mixture, M_{mix}, is a function only of the amount of water in the dilution air or calibration air, as follows:

$$M_{mix} = M_{air} \cdot \left(1 - x_{H2O}\right) + M_{H_2O} \cdot x_{H2O}$$

Eq. 1066.625-7

Where:

M_{air} = molar mass of dry air.x_{H2O} = amount of H_2O in the dilution air or calibration air, determined as described in 40 CFR 1065.645.

M_{H2O} = molar mass of water.

Example:

M_{air} = 28.96559 g/mol

x_{H2O} = 0.0169 mol/mol

M_{H2O} = 18.01528 g/mol

M_{mix} = 28.96559 · (1 − 0.0169) + 18.01528 · 0.0169

M_{mix} = 28.7805 g/mol

(E) For diluted exhaust and dilution air, you may assume a constant molar mass of the mixture, M_{mix}, for all calibration and all testing if you control the amount of water in dilution air and in calibration air, as illustrated in the following table:

TABLE 2 OF § 1066.625—EXAMPLES OF DILUTION AIR AND CALIBRATION AIR DEWPOINTS AT WHICH YOU MAY ASSUME A CONSTANT M_{mix}

If calibration T_{dew} (°C) is . . .	assume the following constant M_{mix} (g/mol) . . .	for the following ranges of T_{dew} (°C) during emission tests [a]
≤0	28.96559	≤18
0	28.89263	≤21
5	28.86148	≤22
10	28.81911	≤24
15	28.76224	≤26
20	28.68685	−8 to 28
25	28.58806	12 to 31
30	28.46005	23 to 34

[a] The specified ranges are valid for all calibration and emission testing over the atmospheric pressure range (80.000 to 103.325) kPa.

(v) The following example illustrates the use of the governing equations to calculate C_d of an SSV flow meter at one reference flow meter value:

$\overline{V}_{ref}$ = 2.395 m³/s

$Z = 1$

M_{mix} = 28.7805 g/mol = 0.0287805 kg/mol

R = 8.314472 J/(mol·K) = 8.314472 (m²·kg)/(s²·mol·K)
T_{in} = 298.15 K
A_t = 0.01824 m²
p_{in} = 99.132 kPa = 99132 Pa = 99132 kg/(m·s²)
γ = 1.399
β = 0.8
Δp = 7.653 kPa

$$r = 1 - \frac{2.312}{99.132} = 0.922$$

$$C_f = \left[\frac{2 \cdot 1.399 \cdot \left(0.922^{\frac{1.399-1}{1.399}} - 1\right)}{(1.399-1) \cdot \left(0.8^4 - 0.922^{\frac{-2}{1.399}}\right)} \right]^{\frac{1}{2}}$$

C_f = 0.472

$$C_d = 2.395 \cdot \frac{101325 \cdot \sqrt{1 \cdot 0.0287805 \cdot 8.314472 \cdot 298.15}}{0.472 \cdot 0.01824 \cdot 8.314472 \cdot 99132 \cdot 293.15}$$

C_d = 0.985

(vi) Calculate the Reynolds number, $Re^{\#}$, for each reference flow rate at standard conditions, $\dot{V}_{refstd}$, using the throat diameter of the venturi, d_t, and the air density at standard conditions, ρ_{std}. Because the dynamic viscosity, μ, is needed to compute $Re^{\#}$, you may use your own fluid viscosity model to determine μ for your calibration gas (usually air), using good engineering judgment. Alternatively, you may use the Sutherland three-coefficient viscosity model to approximate μ, as shown in the following sample calculation for $Re^{\#}$:

$$Re^{\#} = \frac{4 \cdot \rho_{std} \cdot \dot{V}_{refstd}}{\pi \cdot d_t \cdot \mu}$$

Eq. 1066.625-8

Where, using the Sutherland three-coefficient viscosity model:

$$\mu = \mu_0 \cdot \left(\frac{T_{in}}{T_0}\right)^{\frac{3}{2}} \cdot \left(\frac{T_0 + S}{T_{in} + S}\right)$$

Eq. 1066.625-9

Where:

μ_0 = Sutherland reference viscosity.

T_0 = Sutherland reference temperature.

S = Sutherland constant.

TABLE 3 OF § 1066.625—SUTHERLAND THREE-COEFFICIENT VISCOSITY MODEL PARAMETERS

Gas [1]	μ_0	T_0	S	Temperature range within ±2% error [2]	Pressure limit [2]
	kg/(m·s)	K	K	K	kPa
Air	$1.716 \cdot 10^{-5}$	273	111	170 to 1900	≤1800.
CO_2	$1.370 \cdot 10^{-5}$	273	222	190 to 1700	≤3600.
H_2O	$1.12 \cdot 10^{-5}$	350	1064	360 to 1500	≤10000.
O_2	$1.919 \cdot 10^{-5}$	273	139	190 to 2000	≤2500.
N_2	$1.663 \cdot 10^{-5}$	273	107	100 to 1500	≤1600.

[1] Use tabulated parameters only for the pure gases, as listed. Do not combine parameters in calculations to calculate viscosities of gas mixtures.

[2] The model results are valid only for ambient conditions in the specified ranges.

Example:

$\mu_0 = 1.716 \cdot 10^{-5}$ kg/(m·s)

T_0 = 273 K

S = 111 K

$$\mu = 1.716 \cdot 10^{-5} \cdot \left(\frac{298.15}{273}\right)^{\frac{3}{2}} \cdot \left(\frac{273 + 111}{298.15 + 111}\right) \quad \mu = 1.838 \cdot 10^{-5} \text{ kg/(m·s)}$$

T_{in} = 298.15 K

d_t = 152.4 mm = 0.1524 m

ρ_{std} = 1.1509 kg/m³

$$Re^{\#} = \frac{4 \cdot 1.1964 \cdot 2.395}{3.14159 \cdot 0.1524 \cdot 1.838 \cdot 10^{-5}}$$

$Re^{\#} = 1.3027 \cdot 10^6$

(vii) Calculate ρ using the following equation:

$$\rho_{std} = \frac{p_{std} \cdot MW_{mix}}{R \cdot T_{std}}$$

Eq. 1066.625-10

Example:

$$\rho_{\text{std}} = \frac{101325 \cdot 0.0287805}{8.314472 \cdot 293.15}$$

ρ_{std} = 1.1964 kg/m^3

(viii) Create an equation for C_d as a function of $Re^{\#}$, using paired values of the two quantities. The equation may involve any mathematical expression, including a polynomial or a power series. The following equation is an example of a commonly used mathematical expression for relating C_d and $Re^{\#}$:

$$C_{\text{d}} = a_0 - a_1 \cdot \sqrt{\frac{10^6}{Re^{\#}}}$$

Eq. 1066.625-11

(ix) Perform a least-squares regression analysis to determine the best-fit coefficients for the equation and calculate *SEE* as described in 40 CFR 1065.602.

(x) If the equation meets the criterion of $SEE \leq 0.5\% \cdot C_{\text{dmax}}$, you may use the equation for the corresponding range of $Re^{\#}$, as described in §1066.630(b).

(xi) If the equation does not meet the specified statistical criteria, you may use good engineering judgment to omit calibration data points; however, you must use at least seven calibration data points to demonstrate that you meet the criterion. For example, this may involve narrowing the range of flow rates for a better curve fit.

(xii) Take corrective action if the equation does not meet the specified statistical criterion even after omitting calibration data points. For example, select another mathematical expression for the C_d versus $Re^{\#}$ equation, check for leaks, or repeat the calibration process. If you must repeat the calibration process, we recommend applying tighter tolerances to measurements and allowing more time for flows to stabilize.

(xiii) Once you have an equation that meets the specified statistical criterion, you may use the equation only for the corresponding range of $Re^{\#}$.

(c) *CFV calibration*. Some CFV flow meters consist of a single venturi and some consist of multiple venturis where different combinations of venturis are used to meter different flow rates. For CFV flow meters that consist of multiple venturis, either calibrate each venturi independently to determine a separate calibration coefficient, K_v, for each venturi, or calibrate each combination of venturis as one venturi by determining K_v for the system.

(1) To determine K_v for a single venturi or a combination of venturis, perform the following steps:

(i) Calculate an individual K_v for each calibration set point for each restrictor position using the following equation:

$$K_v = \frac{\overline{\dot{V}}_{refstd} \cdot \sqrt{\overline{T}_{in}}}{\overline{p}_{in}}$$

Eq. 1066.625-12

Where:

$\overline{\dot{V}}_{refstd}$= mean flow rate from the reference flow meter, corrected to standard reference conditions.

$\overline{T}_{in}$= mean temperature at the venturi inlet.

$\overline{P}_{in}$= mean static absolute pressure at the venturi inlet.

(ii) Calculate the mean and standard deviation of all the K_v values (see 40 CFR 1065.602). Verify choked flow by plotting K_v as a function of p_{in}. K_v will have a relatively constant value for choked flow; as vacuum pressure increases, the venturi will become unchoked and K_v will decrease. Paragraphs (c)(1)(iii) through (viii) of this section describe how to verify your range of choked flow.

(iii) If the standard deviation of all the K_v values is less than or equal to 0.3% of the mean K_v, use the mean K_v in Eq. 1066.630–7, and use the CFV only up to the highest venturi pressure ratio, r, measured during calibration using the following equation:

$$r = 1 - \frac{\Delta p_{CFV}}{p_{in}}$$

Eq. 1066.625-13

Where:

Δp_{CFV} = differential static pressure; venturi inlet minus venturi outlet.

p_{in} = mean static absolute pressure at the venturi inlet.

(iv) If the standard deviation of all the K_v values exceeds 0.3% of the mean K_v, omit the K_v value corresponding to the data point collected at the highest r measured during calibration.

(v) If the number of remaining data points is less than seven, take corrective action by checking your calibration data or repeating the calibration process. If you repeat the calibration process, we recommend checking for leaks, applying tighter tolerances to measurements and allowing more time for flows to stabilize.

(vi) If the number of remaining K_v values is seven or greater, recalculate the mean and standard deviation of the remaining K_v values.

(vii) If the standard deviation of the remaining K_v values is less than or equal to 0.3% of the mean of the remaining K_v, use that mean K_v in Eq 1066.630–7, and use the CFV values only up to the highest r associated with the remaining K_v.

(viii) If the standard deviation of the remaining K_v still exceeds 0.3% of the mean of the remaining K_v values, repeat the steps in paragraph (c)(1)(iv) through (vii) of this section.

(2) During exhaust emission tests, monitor sonic flow in the CFV by monitoring r. Based on the calibration data selected to meet the standard deviation criterion in paragraphs (c)(1)(iv) and (vii) of this section, in which K_v is constant, select the data values associated with the calibration point with the lowest absolute venturi inlet pressure to determine the r limit. Calculate r during the exhaust emission test using Eq. 1066.625–8 to demonstrate that the value of r during all emission tests is

less than or equal to the r limit derived from the CFV calibration data.

[79 FR 23823, Apr. 28, 2016, as amended at 81 FR 74208, Oct. 25, 2016]

§ 1066.630 PDP, SSV, and CFV flow rate calculations.

This section describes the equations for calculating flow rates from various flow meters. After you calibrate a flow meter according to § 1066.625, use the calculations described in this section to calculate flow during an emission test. Calculate flow according to 40 CFR 1065.642 instead if you calculate emissions based on molar flow rates.

(a) *PDP*. (1) Based on the speed at which you operate the PDP for a test interval, select the corresponding slope, a_1, and intercept, a_0, as determined in § 1066.625(a), to calculate PDP flow rate, $\dot{v}$, as follows:

$$\dot{V} = f_{\mathrm{nPDP}} \cdot \frac{V_{\mathrm{rev}} \cdot T_{\mathrm{std}} \cdot p_{\mathrm{in}}}{T_{\mathrm{in}} \cdot p_{\mathrm{std}}}$$

Eq. 1066.630-1

Where:

f_{nPDP} = pump speed.

V_{rev} = PDP volume pumped per revolution, as determined in paragraph (a)(2) of this section.

T_{std} = standard temperature = 293.15 K.

p_{in} = static absolute pressure at the PDP inlet.

T_{in} = absolute temperature at the PDP inlet.

p_{std} = standard pressure = 101.325 kPa.

(2) Calculate V_{rev} using the following equation:

$$V_{\mathrm{rev}} = \frac{a_1}{f_{\mathrm{nPDP}}} \cdot \sqrt{\frac{p_{\mathrm{out}} - p_{\mathrm{in}}}{p_{\mathrm{out}}}} + a_0$$

Eq. 1066.630-2

p_{out} = static absolute pressure at the PDP outlet.

Example:

a_1 = 0.8405 m^3/s

f_{nPDP} = 12.58 r/s

p_{out} = 99.950 kPa

p_{in} = 98.575 kPa

a_0 = 0.056 m^3/r

T_{in} = 323.5 K

$$V_{\mathrm{rev}} = \frac{0.8405}{12.58} \cdot \sqrt{\frac{99.950 - 98.575}{99.950}} + 0.056$$

V_{rev} = 0.063 m^3/r

$$\dot{V} = 12.58 \cdot \frac{0.06383 \cdot 293.15 \cdot 98.575}{323.5 \cdot 101.3}$$

$\dot{v}$= 0.7079 m³/s

(b) *SSV*. Calculate SSV flow rate, $\dot{v}$, as follows:

$$\dot{V} = C_d \cdot C_f \cdot \frac{A_t \cdot R \cdot p_{in} \cdot T_{std}}{p_{std} \cdot \sqrt{Z \cdot M_{mix} \cdot R \cdot T_{in}}}$$

Eq. 1066.630-3

Where:

C_d = discharge coefficient, as determined based on the C_d versus $Re^{\#}$ equation in §1066.625(b)(2)(viii).

C_f = flow coefficient, as determined in §1066.625(b)(2)(ii).

A_t = venturi throat cross-sectional area.

R = molar gas constant.

p_{in} = static absolute pressure at the venturi inlet.

T_{std} = standard temperature.

p_{std} = standard pressure.

Z = compressibility factor.

M_{mix} = molar mass of gas mixture.

T_{in} = absolute temperature at the venturi inlet.

Example:

C_d = 0.890

C_f = 0.472

A_t = 0.01824 m²

R = 8.314472 J/(mol·K) = 8.314472 (m²·kg)/(s²·mol·K)

p_{in} = 98.496 kPa

T_{std} = 293.15 K

p_{std} = 101.325 kPa

Z = 1

M_{mix} = 28.7789 g/mol = 0.0287789 kg/mol

T_{in} = 296.85 K

$$\dot{V} = 0.89 \cdot 0.472 \cdot \frac{0.01824 \cdot 8.314472 \cdot 98.496 \cdot 293.15}{101.325 \cdot \sqrt{1 \cdot 0.0287805 \cdot 8.314472 \cdot 296.85}}$$

$\dot{V}$ = 2.155 m³/s

(c) *CFV*. If you use multiple venturis and you calibrated each venturi independently to determine a separate calibration coefficient, K_v, for each venturi, calculate the individual volume flow rates through each venturi and sum all their flow rates to determine CFV flow rate, $\dot{V}$. If you use multiple venturis and you calibrated venturis in combination, calculate $\dot{V}$ using the K_v that was determined for that combination of venturis.

(1) To calculate $\dot{V}$ through one venturi or a combination of venturis, use the mean K_v you determined in §1066.625(c) and calculate $\dot{V}$ as follows:

$$\dot{V} = \frac{K_v \cdot p_{in}}{\sqrt{T_{in}}}$$

Eq. 1066.630-4

Where:

K_v = flow meter calibration coefficient.

T_{in} = temperature at the venturi inlet.

p_{in} = absolute static pressure at the venturi inlet.

Example:

K_v = 0.074954 m³·K^0.5/(kPa·s)

p_{in} = 99.654 kPa
T_{in} = 353.15 K

$$\dot{V} = \frac{0.074954 \cdot 99.654}{\sqrt{353.15}}$$

$\dot{V}$= 0.39748 m³/s

(2) [Reserved]

[81 FR 74211, Oct. 25, 2016]

§ 1066.635 NMOG determination.

For vehicles subject to an NMOG standard, determine NMOG as described in paragraph (a) of this section. Except as specified in the standard-setting part, you may alternatively calculate NMOG results based on measured NMHC emissions as described in paragraphs (c) through (f) of this section.

(a) Determine NMOG by independently measuring alcohols and carbonyls as described in 40 CFR 1065.805 and 1065.845. Use good engineering judgment to determine which alcohols and carbonyls you need to measure. This would typically require you to measure all alcohols and carbonyls that you expect to contribute 1% or more of total NMOG. Calculate the mass of NMOG in the exhaust, m_{NMOG}, with the following equation, using density values specified in § 1066.1005(f):

$$m_{NMOG} = m_{NMHC} - \rho_{NMHC} \cdot \sum_{i=1}^{N} \frac{m_{OHCi}}{\rho_{OHCi}} \cdot RF_{OHCi[THC\text{-}FID]} + \sum_{i=1}^{N} m_{OHCi}$$

Eq. 1066.635-1

Where:

m_{NMHC} = the mass of NMHC and all oxygenated hydrocarbon (OHC) in the exhaust, as determined using Eq. 1066.605–2. Calculate NMHC mass based on ρ_{NMHC}.

ρ_{NMHC} = the effective C_1-equivalent density of NMHC as specified in § 1066.1005(f).

m_{OHCi} = the mass of oxygenated species i in the exhaust calculated using Eq. 1066.605–2.

ρ_{OCHi} = the C_1-equivalent density of oxygenated species i.

$RF_{OHCi[THC\text{-}FID]}$ = the response factor of a THC-FID to oxygenated species i relative to propane on a C_1-equivalent basis as determined in 40 CFR 1065.845.

(b) The following example shows how to determine NMOG as described in paragraph (a) of this section for (OHC) compounds including ethanol (C_2H_5OH), methanol (CH_3OH), acetaldehyde (C_2H_4O), and formaldehyde (CH_2O) as C_1-equivalent concentrations:

m_{NMHC} = 0.0125 g
m_{CH3OH} = 0.0002 g
m_{C2H5OH} = 0.0009 g
m_{CH2O} = 0.0001 g
m_{C2H4O} = 0.00005 g
$RF_{CH3OH[THC\text{-}FID]}$ = 0.63
$RF_{C2H5OH[THC\text{-}FID]}$ = 0.75
$RF_{CH2O[THC\text{-}FID]}$ = 0.00
$RF_{C2H4O[THC\text{-}FID]}$ = 0.50
$\rho_{NMHC\text{-}liq}$ = 576.816 g/m³
ρ_{CH3OH} = 1332.02 g/m³
ρ_{C2H5OH} = 957.559 g/m³
ρ_{CH2O} = 1248.21 g/m³
ρ_{C2H4O} = 915.658 g/m³

$$m_{\mathrm{NMOG}} = 0.0125 - 576.816 \cdot \left(\frac{0.0002}{1332.02} \cdot 0.63 + \frac{0.0009}{957.559} \cdot 0.75 + \frac{0.0001}{1248.21} \cdot 0.00 + \frac{0.00005}{915.658} \cdot 0.5 \right) +$$

$$0.0002 + 0.0009 + 0.0001 + 0.00005$$

$$m_{\mathrm{NMOG}} = 0.013273$$

(c) For gasoline containing less than 25% ethanol by volume, you may calculate NMOG from measured NMHC emissions as follows:

(1) For hot-start and hot-running test cycles or intervals other than the FTP, you may determine NMOG based on the NMHC emission rate using the following equation:

$$e_{\mathrm{NMOGh}} = e_{\mathrm{NMHCh}} \cdot 1.03$$

Eq. 1066.635-2

Where:

e_{NMOGh} = mass emission rate of NMOG from the hot-running test cycle.

e_{NMHCh} = mass emission rate of NMHC from the hot-running test cycle, calculated using $\rho_{\mathrm{NMHC\text{-}liq}}$.

Example:

e_{NMHCh} = 0.025 g/mi

e_{NMOGh} = 0.025 · 1.03 = 0.026 g/mi

(2) You may determine weighted composite NMOG for FTP testing based on the weighted composite NMHC emission rate and the volume percent of ethanol in the fuel using the following equation:

$$e_{\mathrm{NMOGcomp}} = e_{\mathrm{NMHCcomp}} \cdot \left(1.0302 + 0.0071 \cdot VP_{\mathrm{EtOH}}\right)$$

Eq. 1066.635-3

Where:

e_{NMOGcomp} = weighted FTP composite mass emission rate of NMOG.

e_{NMHCcomp} = weighted FTP composite mass emission rate of NMHC, calculated using $\rho_{\mathrm{NMHC\text{-}liq}}$.

VP_{EtOH} = volume percentage of ethanol in the test fuel. Use good engineering judgment to determine this value either as specified in 40 CFR 1065.710 or based on blending volumes, taking into account any denaturant.

Example:

e_{NMHCcomp} = 0.025 g/mi

VP_{EtOH} = 10.1%

e_{NMOGcomp} = 0.025 · (1.0302 + 0.0071 · 10.1) = 0.0275 g/mi

(3) You may determine NMOG for the transient portion of the FTP cold-start test for use in fuel economy and CREE calculations based on the NMHC emission rate for the test interval and the volume percent of ethanol in the fuel using the following equation:

$$e_{\text{NMOG-FTPct}} = e_{\text{NMHC-FTPct}} \cdot \left(1.0246 + 0.0079 \cdot VP_{\text{EtOH}}\right)$$

Eq. 1066.635-4

Where:

$e_{\text{NMOG–FTPct}}$ = mass emission rate of NMOG from the transient portion of the FTP cold-start test (generally known as bag 1).

$e_{\text{NMHC–FTPct}}$ = mass emission rate of NMHC from the transient portion of the FTP cold-start test (bag 1), calculated using $\rho_{\text{NMHC-liq}}$.

Example:

$e_{\text{NMHC–FTPct}}$ = 0.052 g/mi

VP_{EtOH} = 10.1%

$e_{\text{NMOG–FTPct}}$ = 0.052 · (1.0246 + 0.0079 · 10.1) = 0.0574 g/mi

(4) You may determine NMOG for the stabilized portion of the FTP test for either the cold-start test or the hot-start test (bag 2 or bag 4) for use in fuel economy and CREE calculations based on the corresponding NMHC emission rate and the volume percent of ethanol in the fuel using the following equation:

$$e_{\text{NMOG-FTPcs-hs}} = e_{\text{NMHC-FTPcs-hs}} \cdot \left(1.1135 + 0.001 \cdot VP_{\text{EtOH}}\right)$$

Eq. 1066.635-5

Where:

$e_{\text{NMOG–FTPcs-hs}}$ = mass emission rate of NMOG from the stabilized portion of the FTP test (bag 2 or bag 4).

$e_{\text{NMHC–FTPcs-hs}}$ = mass emission rate of NMHC from the stabilized portion of the FTP test (bag 2 or bag 4), calculated using $\rho_{\text{NMHC-liq}}$.

(5) You may determine NMOG for the transient portion of the FTP hot-start test for use in fuel economy and CREE calculations based on the NMHC emission rate for the test interval and the volume percent of ethanol in the fuel using the following equation:

$$e_{\text{NMOG-FTPht}} = e_{\text{NMHC-FTPht}} \cdot \left(1.0195 + 0.0031 \cdot VP_{\text{EtOH}}\right)$$

Eq. 1066.635-6

Where:

$e_{\text{NMOG–FTPht}}$ = mass emission rate of NMOG from the transient portion of the FTP hot-start test (bag 3).

$e_{\text{NMHC–FTPht}}$ = mass emission rate of NMHC from the transient portion of the FTP hot-start test (bag 3), calculated using $\rho_{\text{NMHC-liq}}$.

(6) For PHEVs, you may determine NMOG based on testing over one full UDDS using Eq. 1066.635–3.

(d) You may take the following alternative steps when determining fuel economy and CREE under 40 CFR part 600 for testing with ethanol-gasoline blends that have up to 25% ethanol by volume:

(1) Calculate NMOG by test interval using Eq. 1066.635–3 for individual bag measurements from the FTP.

(2) For HEVs, calculate NMOG for two-bag FTPs using Eq. 1066.635–3 as described in 40 CFR 600.114.

(e) We consider NMOG values for diesel-fueled vehicles, CNG-fueled vehicles, LNG-fueled vehicles, and LPG-fueled vehicles to be equivalent to

NMHC emission values for all test cycles.

(f) For all fuels not covered by paragraphs (c) and (e) of this section, manufacturers may propose a methodology to calculate NMOG results from measured NMHC emissions. We will approve adjustments based on comparative testing that demonstrates how to properly represent NMOG based on measured NMHC emissions.

[79 FR 23823, Apr. 28, 2014, as amended at 80 FR 9122, Feb. 19, 2015; 81 FR 74212, Oct. 25, 2016]

§ 1066.695 Data requirements.

Record information for each test as follows:

(a) Test number.

(b) A brief description of the test vehicle (or other system/device tested).

(c) Date and time of day for each part of the test sequence.

(d) Test results. Also include a validation of driver accuracy as described in § 1066.425(j).

(e) Driver and equipment operators.

(f) Vehicle information as applicable, including identification number, model year, applicable emission standards (including bin standards or family emission limits, as applicable), vehicle model, vehicle class, test group, durability group, engine family, evaporative/refueling emission family, basic engine description (including displacement, number of cylinders, turbocharger/supercharger used, and catalyst type), fuel system (type of fuel injection and fuel tank capacity and location), engine code, GVWR, applicable test weight, inertia weight class, actual curb weight at zero miles, actual road load at 50 mi/hr, transmission class and configuration, axle ratio, odometer reading, idle rpm, and measured drive wheel tire pressure.

(g) Dynamometer identification, inertia weight setting, indicated power absorption setting, and records to verify compliance with the driving distance and cycle-validation criteria as calculated from measured roll or shaft revolutions.

(h) Analyzer bench identification, analyzer ranges, recordings of analyzer output during zero, span, and sample readings.

(i) Associate the following information with the test record: test number, date, vehicle identification, vehicle and equipment operators, and identification of the measurements recorded.

(j) Test cell barometric pressure and humidity. You may use a central laboratory barometer if the barometric pressure in each test cell is shown to be within ±0.1% of the barometric pressure at the central barometer location.

(k) Records to verify compliance with the ambient temperature requirements throughout the test procedure and records of fuel temperatures during the running loss test.

(l) [Reserved]

(m) For CVS systems, record dilution factor for each test interval and the following additional information:

(1) For CFV and SSV testing, V_{mix} for each interval of the exhaust test.

(2) For PDP testing, test measurements required to calculate V_{mix} for each test interval.

(n) The humidity of the dilution air, if you remove H_2O from an emission sample before measurement.

(o) Temperature of the dilute exhaust mixture and secondary dilution air (in the case of a double-dilution system) at the inlet to the respective gas meter or flow instrumentation used for PM sampling. Determine minimum values, maximum values, mean values, and percent of time outside of the tolerance over each test interval.

(p) The maximum exhaust gas temperature over the course of the test interval within 20 cm upstream or downstream of PM sample media.

(q) If applicable, the temperatures of the heated FID, the gas in the heated sample line, and the heated filter. Determine minimum values, maximum values, average values, and percent of time outside of the tolerance over each test interval.

(r) Gas meter or flow measurement instrumentation readings used for batch sampling over each test interval. Determine minimum, maximum, and average values over each test interval.

(s) The stabilized pre-test weight and post-test weight of each particulate sample media (e.g., filter).

(t) Continuous temperature and humidity of the ambient air in which the

PM sample media are stabilized. Determine minimum values, maximum values, average values, and percent of time outside of the tolerance over each test interval.

(u) For vehicles fueled by natural gas, the test fuel composition, including all carbon-containing compounds (including CO_2, but excluding CO). Record C_1 and C_2 compounds individually. You may record C_3 through C_5 hydrocarbons together, and you may record C_6 and heavier hydrocarbon compounds together.

(v) For vehicles fueled by liquefied petroleum gas, the test fuel composition, including all carbon-containing compounds (including CO_2, but excluding CO). Record C_1 through C_4 compounds individually. You may record C_5 and heavier hydrocarbons together.

(w) For the AC17 test in § 1066.845, interior volume, climate control system type and characteristics, refrigerant used, compressor type, and evaporator/condenser characteristics.

(x) Additional information related to evaporative emissions. [Reserved]

(y) Additional information related to refueling emissions. [Reserved]

[[79 FR 23823, Apr. 28, 2016, as amended at 81 FR 74213, Oct. 25, 2016]

Subpart H—Cold Temperature Test Procedures

§ 1066.701 Applicability and general provisions.

(a) The procedures of this part 1066 may be used for testing at any ambient temperature. Section 1066.710 describes the provisions that apply for testing vehicles at a nominal temperature of −7 °C (20 °F); these procedures apply for motor vehicles as described in 40 CFR part 86, subpart S, and 40 CFR part 600. For other vehicles, see the standard-setting part to determine if your vehicle is required to meet emission standards outside the normal (20 to 30) °C ((68 to 86) °F) temperature range.

(b) Do not apply the humidity correction factor in § 1066.615(a) for cold temperature testing.

[79 FR 23823, Apr. 28, 2014, as amended at 80 FR 9122, Feb. 19, 2015]

§ 1066.710 Cold temperature testing procedures for measuring CO and NMHC emissions and determining fuel economy.

This section describes procedures for measuring carbon monoxide (CO) and nonmethane hydrocarbon (NMHC) emissions and determining fuel economy on a cold day using the FTP test cycle (see § 1066.801). The following figure illustrates the test procedure:

Figure 1 of § 1066.710—Cold temperature testing sequence for measuring CO and NMHC emissions and determining fuel economy

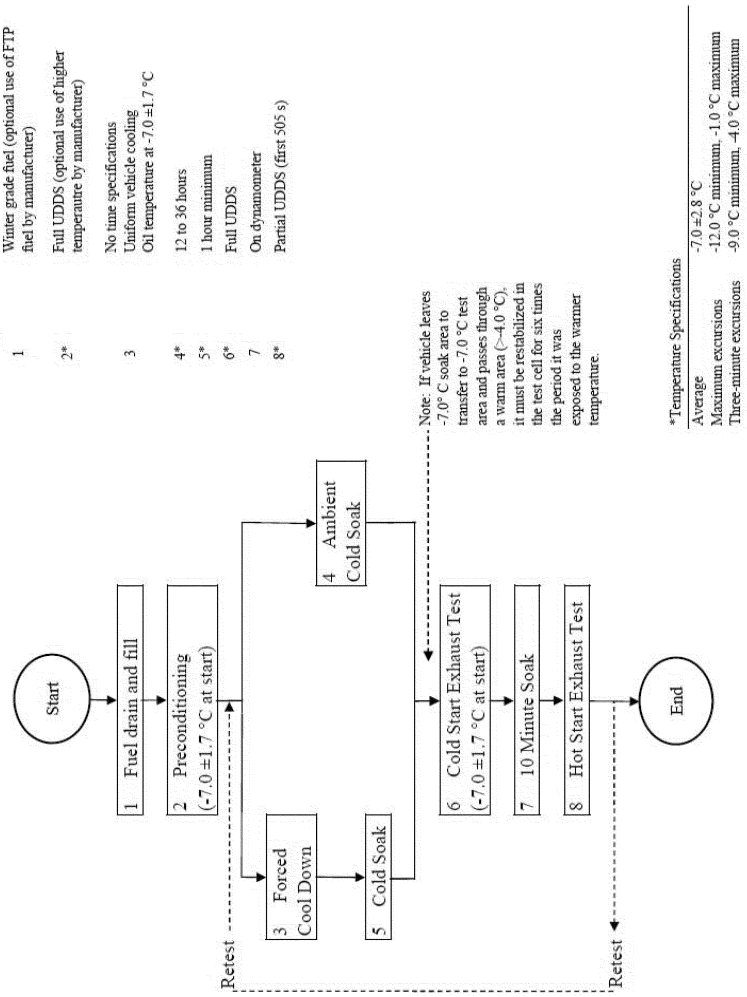

(a) Follow the exhaust emission measurement procedures specified in §§ 1066.410 through 1066.425 and § 1066.815(d), subject to the following exceptions and additional provisions:

(1) Measure and control ambient conditions as specified in paragraph (b) of this section.

(2) Use the vehicle's heater and defroster as specified in paragraph (c) of this section.

(3) Precondition and stabilize the vehicle as specified in paragraphs (d) and (e) of this section. Ensure that there is no precipitation or dew on the vehicle before the emission test.

(4) For dynamometers that have independently heated bearings, start the emission test within 20 minutes after warming up the dynamometer; for other types of dynamometers, start the emission test within 10 minutes after warming up the dynamometer.

(5) Adjust the dynamometer to simulate vehicle operation on the road at −7 °C as described in § 1066.305(b).

(6) Analyze samples for NMHC, CO, and CO_2. You do not need to analyze samples for other pollutants.

(b) Maintain ambient conditions as follows instead of following the specifications in subpart E of this part:

(1) *Ambient temperature for emission tests*. Measure and record ambient temperature in the test cell at least once every 60 seconds during the sampling period. The temperature must be (−7.0 ±1.7) °C at the start of the test and average temperature must be (−7.0 ±2.8) °C during the test. Instantaneous temperature values may be above −4.0 °C or below −9.0 °C, but not for more than 3 minutes at a time during the test.

(2) *Ambient temperature for preconditioning*. Instantaneous ambient temperature values may be above −4.0 °C or below −9.0 °C but not for more than 3 minutes at a time during the preconditioning period. At no time may the ambient temperatures be below −12.0 °C or above −1.0 °C. The average ambient temperature during preconditioning must be (−7.0 ±2.8) °C. You may precondition vehicles at temperatures above −7.0 °C or with a temperature tolerance greater than that described in this section (or both) if you determine that this will not cause NMHC, CO, or CO_2 emissions to decrease; if you modify the temperature specifications for vehicle preconditioning, adjust the procedures described in this section appropriately for your testing.

(3) *Ambient humidity*. Maintain humidity low enough to prevent condensation on the dynamometer rolls during testing.

(c) *Heater and defroster*. During the test, operate the vehicle's interior climate control system with the heat on and set to primarily defrost the front window. Turn air conditioning off. You may not use any supplemental auxiliary heat during this testing. You may set the heater to any temperature and fan setting during vehicle preconditioning.

(1) *Manual control*. Unless you rely on automatic control as specified in paragraph (c)(2) of this section, take the following steps to control heater settings:

(i) Set the climate control system as follows before the first acceleration (t = 20 s), or before starting the vehicle if the climate control system allows it:

(A) *Temperature*. Set controls to maximum heat. For automatic control systems running in manual mode, set the heater control to 72 °F or higher.

(B) *Fan speed*. Set the fan speed to full off or the lowest available speed if a full off position is not available.

(C) *Airflow direction*. Direct airflow to the front window (window defrost mode).

(D) *Air source*. If independently controllable, set the system to draw in outside air.

(ii) At the second idle of the test cycle, which occurs 125 seconds after the start of the test, set the fan speed to maximum. Complete by 130 seconds after the start of the test. Leave temperature and air source settings unchanged.

(iii) At the sixth idle of the test interval, which occurs at the deceleration to zero miles per hour 505 seconds after the start of the test, set the fan speed to the lowest setting that maintains air flow. Complete these changes by 510 seconds after the start of the test. You may use different vent and fan speed settings for the remainder of the test. Leave the temperature and air source settings unchanged.

(2) *Automatic control.* For vehicles with automatic control systems running in automatic mode, set the temperature to 72 °F and the air flow control to the front window defrost mode for the whole test.

(3) *Multiple-zone systems.* For vehicles that have separate driver and passenger controls or separate front and rear controls, you must set all temperature and fan controls as described in paragraphs (c)(1) and (2) of this section, except that rear controls need not be set to defrost the front window.

(4) *Alternative test procedures.* We may approve the use of other settings under 40 CFR 86.1840 if a vehicle's climate control system is not compatible with the provisions of this section.

(d) Take the following steps to prepare and precondition vehicles for testing under this section:

(1) Prepare the vehicle as described in § 1066.810(a).

(2) Fill the fuel tank to approximately 40% of the manufacturer's nominal fuel tank capacity with the appropriate test fuel for cold temperature testing as specified 40 CFR Part 1065, subpart H. The temperature of the dispensed test fuel must be at or below 15.5 °C. If the leftover fuel in the fuel tank before the refueling event does not meet these specifications, drain the fuel tank before refueling. You may operate the vehicle prior to the preconditioning drive to eliminate fuel effects on adaptive memory systems.

(3) You may start the preconditioning drive once the fuel in the fuel tank reaches (−12.6 to −1.4) °C. Precondition the vehicle as follows:

(i) Push or drive the vehicle onto the dynamometer.

(ii) Operate the vehicle over one UDDS. You may perform additional vehicle preconditioning with repeated driving over the UDDS, subject to our advance approval.

(iii) Turn off the test vehicle and any cooling fans within 5 minutes after completing the preconditioning drive. Ambient temperature must be between (−12.0 and −1.0) °C in the 5 minutes following the preconditioning drive.

(iv) Do not manually purge or load the evaporative canister.

(e) Soak the vehicle for (12 to 36) hours to stabilize it at test temperatures before starting the emission test as described in this paragraph (e). If you move a stabilized vehicle through a warm area when transporting it to the dynamometer for testing, you must restabilize the vehicle by holding it at an ambient temperature within the range specified in paragraph (b)(1) of this section for at least six times as long as the vehicle was exposed to warmer temperatures. Use one of the following methods to reach a stabilized condition:

(1) *Cold storage.* Measure and record ambient temperature in the test cell at least once every 60 seconds during the ambient cold soak period. These ambient temperatures may be above −4.0 °C or below −9.0 °C, but not for more than 3 minutes at a time. Use measured values to calculate an hourly average temperature. Each hourly average temperature must be (−7.0 °C ±2.8) °C.

(2) *Forced-cooling or warming.* Position fans to blow temperature-controlled air onto the vehicle to stabilize the vehicle at the specified temperatures for emission testing. Position fans to target the vehicle's drive train, engine block, and radiator rather than the oil pan. You may not place fans under the vehicle. You may consider the vehicle to be stabilized at the test temperature when the bulk oil temperature reaches (−8.7 to −5.3) °C; measure oil temperature at one or more points away from the side or bottom surfaces of the oil pan. Each oil temperature measurement must be within the specified range before stabilization is complete. Once the vehicle reaches this stabilized condition, cold soak the vehicle within the stabilized temperature range for at least one hour before starting the emission test. During this time, keep the ambient temperature within the range specified in paragraph (b)(1) of this section.

[79 FR 23823, Apr. 28, 2014, as amended at 80 FR 9122, Feb. 19, 2015; 81 FR 74213, Oct. 25, 2016]

EFFECTIVE DATE NOTE: At 86 FR 34583, June 29, 2021, § 1066.710 was amended, effective July 29, 2021.

Subpart I—Exhaust Emission Test Procedures for Motor Vehicles

§ 1066.801 Applicability and general provisions.

This subpart I specifies how to apply the test procedures of this part for light-duty vehicles, light-duty trucks, and heavy-duty vehicles at or below 14,000 pounds GVWR that are subject to chassis testing for exhaust emissions under 40 CFR Part 86, subpart S. For these vehicles, references in this part 1066 to the standard-setting part include this subpart I.

(a) Use the procedures detailed in this subpart to measure vehicle emissions over a specified drive schedule in conjunction with subpart E of this part. Where the procedures of subpart E of this part differ from this subpart I, the provisions in this subpart I take precedence.

(b) Collect samples of every pollutant for which an emission standard applies, unless specified otherwise.

(c) This subpart covers the following test procedures:

(1) The Federal Test Procedure (FTP), which includes the general driving cycle. This procedure is also used for measuring evaporative emissions. This may be called the conventional test since it was adopted with the earliest emission standards.

(i) The FTP consists of one Urban Dynamometer Driving Schedule (UDDS) as specified in paragraph (a) of Appendix I of 40 CFR Part 86, followed by a 10-minute soak with the engine off and repeat driving through the first 505 seconds of the UDDS. Note that the UDDS represents about 7.5 miles of driving in an urban area. Engine start-up (with all accessories turned off), operation over the initial UDDS, and engine shutdown make a complete cold-start test. The hot-start test consists of the first 505 seconds of the UDDS following the 10-minute soak and a hot-running portion of the UDDS after the first 505 seconds. The first 505 seconds of the UDDS is considered the transient portion; the remainder of the UDDS is considered the stabilized (or hot-stabilized) portion. The hot-stabilized portion for the hot-start test is generally measured during the cold-start test; however, in certain cases, the hot-start test may involve a second full UDDS following the 10-minute soak, rather than repeating only the first 505 seconds. See §§ 1066.815 and 1066.820.

(ii) Evaporative emission testing includes a preconditioning drive with the UDDS and a full FTP cycle, including exhaust measurement, followed by evaporative emission measurements. In the three-day diurnal test sequence, the exhaust test is followed by a running loss test consisting of a UDDS, then two New York City Cycles as specified in paragraph (e) of Appendix I of 40 CFR Part 86, followed by another UDDS; see 40 CFR 86.134. Note that the New York City Cycle represents about 1.18 miles of driving in a city center. The running loss test is followed by a high-temperature hot soak test as described in 40 CFR 86.138 and a three-day diurnal emission test as described in 40 CFR 86.133. In the two-day diurnal test sequence, the exhaust test is followed by a low-temperature hot soak test as described in 40 CFR 86.138–96(k) and a two-day diurnal emission test as described in 40 CFR 86.133–96(p).

(iii) Refueling emission tests for vehicles that rely on integrated control of diurnal and refueling emissions includes vehicle operation over the full FTP test cycle corresponding to the three-day diurnal test sequence to precondition and purge the evaporative canister. For non-integrated systems, there is a preconditioning drive over the UDDS and a refueling event, followed by repeated UDDS driving to purge the evaporative canister. The refueling emission test procedures are described in 40 CFR 86.150 through 86.157.

(2) The Supplemental Federal Test Procedure (SFTP) measures the emission effects from aggressive driving and operation with the vehicle's air conditioner. The SFTP is based on a composite of three different test elements. In addition to the FTP, vehicles generally operate over the US06 and SC03 driving schedules as specified in paragraphs (g) and (h) of Appendix I of 40 CFR part 86, respectively. In the case of heavy-duty vehicles above 10,000 pounds GVWR and at or below 14,000 pounds GVWR, SFTP testing involves additional driving over the Hot LA–92

driving schedule as specified in paragraph (c) of 40 CFR part 86, Appendix I, instead of the US06 driving schedule. Note that the US06 driving schedule represents about 8.0 miles of relatively aggressive driving; the SC03 driving schedule represents about 3.6 miles of urban driving with the air conditioner operating; and the hot portion of the LA–92 driving schedule represents about 9.8 miles of relatively aggressive driving for commercial trucks. See § 1066.830.

(3) The Highway Fuel Economy Test (HFET) is specified in Appendix I of 40 CFR part 600. Note that the HFET represents about 10.2 miles of rural and freeway driving with an average speed of 48.6 mi/hr and a maximum speed of 60.0 mi/hr. See § 1066.840.

(4) Cold temperature standards apply for CO and NMHC emissions when vehicles operate over the FTP at a nominal temperature of −7 °C. See 40 CFR Part 86, subpart C, and subpart H of this part.

(5) Emission measurement to determine air conditioning credits for greenhouse gas standards. In this optional procedure, manufacturers operate vehicles over repeat runs of the AC17 test sequence to allow for calculating credits as part of demonstrating compliance with CO_2 emission standards. The AC17 test sequence consists of a UDDS preconditioning drive, followed by emission measurements over the SC03 and HFET driving schedules. See § 1066.845.

(d) The following provisions apply for all testing:

(1) Ambient temperatures encountered by the test vehicle must be (20 to 30) °C, unless otherwise specified. Where ambient temperature specifications apply before or between test measurements, the vehicle may be exposed to temperatures outside of the specified range for up to 10 minutes to account for vehicle transport or other actions to prepare for testing. The temperatures monitored during testing must be representative of those experienced by the test vehicle. For example, do not measure ambient temperatures near a heat source.

(2) Do not operate or store the vehicle at an incline if good engineering judgment indicates that it would affect emissions.

(3) If a test is void after collecting emission data from previous test segments, the test may be repeated to collect only those data points needed to complete emission measurements. You may combine emission measurements from different test runs to demonstrate compliance with emission standards.

(4) Prepare vehicles for testing as described in § 1066.810.

(e) The following figure illustrates the FTP test sequence for measuring exhaust and evaporative emissions:

Figure 1 of §1066.801 —FTP test sequence

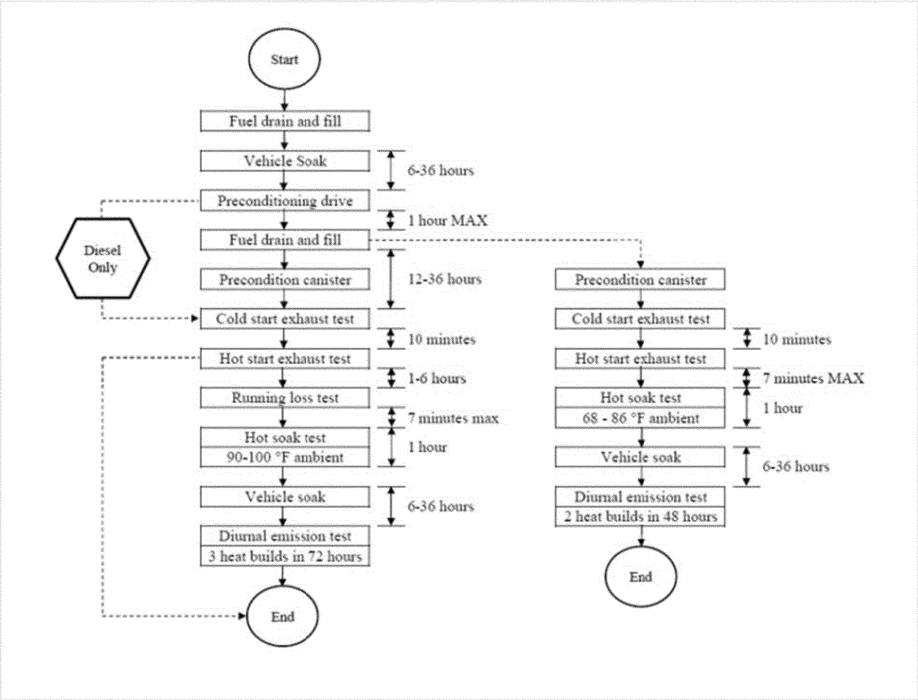

[79 FR 23823, Apr. 28, 2014, as amended at 80 FR 9123, Feb. 19, 2015; 81 FR 74213, Oct. 25, 2016]

EFFECTIVE DATE NOTE: At 86 FR 34583, June 29, 2021, §1066.801 was amended, effective July 29, 2021.

§ 1066.805 Road-load power, test weight, and inertia weight class determination.

(a) Simulate a vehicle's test weight on the dynamometer using the appropriate equivalent test weight shown in Table 1 of this section. Equivalent test weights are established according to each vehicle's test weight basis, as described in paragraph (b) of this section. Table 1 also specifies the inertia weight class corresponding to each equivalent test weight; the inertia weight class allows for grouping vehicles with a range of equivalent test weights. Table 1 follows:

TABLE 1 OF § 1066.805—EQUIVALENT TEST WEIGHTS (POUNDS)

Test weight	Equivalent test	Inertia weight
Up to 1062	1000	1000
1063 to 1187	1125	1000
1188 to 1312	1250	1250
1313 to 1437	1375	1250
1438 to 1562	1500	1500
1563 to 1687	1625	1500
1688 to 1812	1750	1750
1813 to 1937	1875	1750
1938 to 2062	2000	2000
2063 to 2187	2125	2000
2188 to 2312	2250	2250
2313 to 2437	2375	2250
2438 to 2562	2500	2500
2563 to 2687	2625	2500
2688 to 2812	2750	2750
2813 to 2937	2875	2750
2938 to 3062	3000	3000
3063 to 3187	3125	3000
3188 to 3312	3250	3000
3313 to 3437	3375	3500
3438 to 3562	3500	3500
3563 to 3687	3625	3500
3688 to 3812	3750	3500
3813 to 3937	3875	4000
3938 to 4125	4000	4000
4126 to 4375	4250	4000

TABLE 1 OF § 1066.805—EQUIVALENT TEST WEIGHTS (POUNDS)—Continued

Test weight	Equivalent test	Inertia weight
4376 to 4625	4500	4500
4626 to 4875	4750	4500
4876 to 5125	5000	5000
5126 to 5375	5250	5000
5376 to 5750	5500	5500
5751 to 6250	6000	6000
6251 to 6750	6500	6500
6751 to 7250	7000	7000
7251 to 7750	7500	7500
7751 to 8250	8000	8000
8251 to 8750	8500	8500
8751 to 9250	9000	9000
9251 to 9750	9500	9500
9751 to 10250	10000	10000
10251 to 10750	10500	10500
10751 to 11250	11000	11000
11251 to 11750	11500	11500
11751 to 12250	12000	12000
12251 to 12750	12500	12500
12751 to 13250	13000	13000
13251 to 13750	13500	13500
13751 to 14000	14000	14000

(b) The test weight basis for non-MDPV heavy-duty vehicles is ''adjusted loaded vehicle weight''. For all other vehicles, the test weight basis for establishing equivalent test weight is ''loaded vehicle weight''. These load terms are defined in 40 CFR 86.1803.

(c) For FTP, SFTP, New York City Cycle, HFET, and LA–92 testing, determine road-load forces for each test vehicle at speeds between 9.3 and 71.5 miles per hour. The road-load force must represent vehicle operation on a smooth, level road with no wind or calm winds, no precipitation, an ambient temperature of approximately 20 °C, and atmospheric pressure of 98.21 kPa. You may extrapolate road-load force for speeds below 9.3 mi/hr.

[79 FR 23823, Apr. 28, 2016, as amended at 81 FR 74213, Oct. 25, 2016]

§ 1066.810 Vehicle preparation.

(a) Include additional fittings and adapters as required to accommodate a fuel drain at the lowest point possible in the tank(s) as installed on the vehicle.

(b) For preconditioning that involves loading an evaporative emission canister with butane, provide valving or other means to allow for purging and loading the canister.

(c) For vehicles to be tested for running loss emissions (40 CFR 86.134), prepare the fuel tank for measuring temperature and pressure as specified in 40 CFR 86.107–98(e) and (f) and 40 CFR 86.134. Vapor temperature measurement is optional during the running loss test.

(d) For vehicles to be tested for running loss emissions, prepare the exhaust system by sealing or plugging all detectable sources of exhaust gas leaks. Inspect or test the exhaust system to ensure that there are no leaks that would cause exhaust hydrocarbon emissions to be detected as running losses.

(e) The following provisions apply for preconditioning steps to reduce nonfuel emissions to normal vehicle background levels for vehicles subject to Tier 3 evaporative emission standards under 40 CFR 86.1813:

(1) You must notify us in advance if you plan to perform such preconditioning. This notice must include a detailed description of the intended procedures and any measurements or thresholds for determining when stabilization is complete. You need not repeat this notification for additional vehicle testing in the same or later model years as long as your preconditioning practice conforms to these procedures.

(2) You may precondition a vehicle as described in paragraph (e)(1) of this section only within 12 months after the vehicle's original date of manufacture, except that you may ask us to approve further preconditioning steps for any testing to address identifiable sources of nonfuel emissions beyond what would generally occur with an appropriately aged in-use vehicle. For example, you may clean up fluid leaks and you may perform further off-vehicle preconditioning for tires or other replacement parts that are less than 12 months old. You may also replace the spare tire with an aged spare tire, and you may replace the windshield washer fluid with water.

§ 1066.815 Exhaust emission test procedures for FTP testing.

(a) *General.* The FTP exhaust emission test sequence consists of a cold-start test and a hot-start test as described in § 1066.801.

(b) *PM sampling options.* Collect PM using any of the procedures specified in paragraphs (b)(1) through (5) of this

section and use the corresponding equation in §1066.820 to calculate FTP composite emissions. Testing must meet the requirements related to filter face velocity as described in §1066.110(b)(2)(iii)(C), except as specified in paragraphs (b)(4) and (5) of this section. For procedures involving flow weighting, set the filter face velocity to a weighting target of 1.0 to meet the requirements of §1066.110(b)(2)(iii)(C). Allow filter face velocity to decrease as a percentage of the weighting factor if the weighting factor is less than 1.0 and do not change the nominal CVS flowrates or secondary dilution ratios between FTP or UDDS test intervals. Use the appropriate equations in §1066.610 to show that you meet the dilution factor requirements of §1066.110(b)(2)(iii)(B). If you collect PM using the procedures specified in paragraph (b)(4) or (5) of this section, the residence time requirements in 40 CFR 1065.140(e)(3) apply, except that you may exceed an overall residence time of 5.5 s for sample flow rates below the highest expected sample flow rate.

(1) You may collect a separate PM sample for transient and stabilized portions of the cold-start UDDS and the hot-start UDDS. This may either be done by sampling with three bags or four bags. You may omit the stabilized portion of the hot-start test (bag 4) and use the stabilized portion of the cold-start test (bag 2) in its place.

(2) You may collect PM on one filter over the cold-start UDDS and on a separate filter over the hot-start UDDS.

(3) You may collect PM on one filter over the cold-start UDDS (bag 1 and bag 2) and on a separate filter over the 867 seconds of the stabilized portion of the cold-start UDDS and the first 505 seconds of the hot-start UDDS (bag 2 and bag 3). Note that this option involves duplicate measurements during the stabilized portion of the cold-start UDDS.

(4) You may collect PM on a single filter over the cold-start UDDS and the first 505 seconds of the hot-start UDDS using one of the following methods:

(i) Adjust your sampling system flow rate over the filter to weight the filter face velocity over the three intervals of the FTP based on weighting targets of 0.43 for bag 1, 1.0 for bag 2, and 0.57 for bag 3.

(ii) Maintain a constant sampling system flow rate over the filter for all three intervals of the FTP by increasing overall dilution ratios for bag 1 and bag 3. To do this, reduce the sample flow rate from the exhaust (or diluted exhaust) such that the value is reduced to 43% and 57%, respectively, of the bag 2 values. For constant-volume samplers, this requires that you decrease the dilute exhaust sampling rate from the CVS and compensate for that by increasing the amount of secondary dilution air.

(5) You may collect PM on a single filter over the cold-start UDDS and the full hot-start UDDS using one of the following methods:

(i) Adjust your sampling system flow rate over the filter to weight the filter face velocity based on weighting targets of 0.75 for the cold-start UDDS and 1.0 for the hot-start UDDS.

(ii) Maintain a constant sampling system flow rate over the filter for both the cold-start and hot-start UDDS by increasing the overall dilution ratio for the cold-start UDDS. To do this, reduce the sample flow rate from the exhaust (or diluted exhaust) such that the value is reduced to 75% of the hot-start UDDS value. For constant-volume samplers, this requires that you decrease the dilute exhaust sampling rate from the CVS and compensate for that by increasing the amount of secondary dilution air.

(c) *Gaseous sampling options.* Collect gaseous samples using any of the following procedures:

(1) You may collect a single sample for a full UDDS (cold-start or hot-start).

(2) You may sample emissions separately for transient and stabilized portions of any UDDS.

(3) You may omit the stabilized portion of the hot-start test (bag 4) and use the stabilized portion of the cold-start test (bag 2) in its place.

(d) *Test sequence.* Follow the exhaust emission measurement procedures specified in §§1066.410 through 1066.425, subject to the following exceptions and additional provisions:

(1) Take the following steps for the cold-start test:

(i) Precondition the vehicle as described in § 1066.816. Initiate the cold-start test following the 12 to 36 hour soak period.

(ii) Start sampling and recording simultaneously with starting the vehicle. Place the vehicle in gear 15 seconds after engine starting, which is 5 seconds before the first acceleration.

(iii) At the end of the deceleration scheduled to occur 505 seconds into the cold-start UDDS, simultaneously switch all the sample flows from the cold-start transient interval to the stabilized interval, stopping all cold-start transient interval sampling and recording, including background sampling. Reset integrating devices for the stabilized interval and indicate the end of the cold-start interval in the recorded data. Operate the vehicle over the remainder of the UDDS. Turn the engine off 2 seconds after the end of the last deceleration in the stabilized interval (1,369 seconds after the start of the driving schedule).

(iv) Five seconds after the engine stops running, stop all stabilized interval sampling and recording, including background sampling. Stop any integrating devices for the stabilized interval and indicate the end of the stabilized interval in the recorded data. Note that the 5 second delay is intended to account for sampling system transport.

(2) Take the following steps for the hot-start test:

(i) Initiate the hot-start test (9 to 11) minutes after the end of the sample period for the cold-start UDDS.

(ii) Repeat the steps in paragraph (d)(1)(ii) of this section. Operate the vehicle over the first 505 seconds of the UDDS. For tests that do not include bag 4 operation, turn off the engine and simultaneously stop all hot-start sampling and recording, including background sampling, and any integrating devices at the end of the deceleration scheduled to occur 505 seconds into the hot-start UDDS.

(iii) To include bag 4 measurement, operate the vehicles over the remainder of the UDDS and conclude the testing as described in paragraphs (d)(1)(iii) and (iv) of this section.

(3) This completes the procedure for measuring FTP exhaust emissions. See § 1066.801 and subpart J of this part for continuing the test sequence to measure evaporative or refueling emissions.

[79 FR 23823, Apr. 28, 2014, as amended at 80 FR 9124, Feb. 19, 2015; 81 FR 74213, Oct. 25, 2016]

§ 1066.816 Vehicle preconditioning for FTP testing.

Precondition the test vehicle before the FTP exhaust measurement as described in 40 CFR 86.132.

§ 1066.820 Composite calculations for FTP exhaust emissions.

(a) Determine the mass of exhaust emissions of each pollutant for each FTP test interval as described in § 1066.605.

(b) Calculate the final composite gaseous test results as a mass-weighted value, $e_{[\text{emission}]-\text{FTPcomp}}$, in grams per mile using the following equation:

$$e_{[\text{emission}]\text{-FTPcomp}} = 0.43 \cdot \left(\frac{m_{\text{c}}}{D_{\text{ct}} + D_{\text{cs}}} \right) + 0.57 \cdot \left(\frac{m_{\text{h}}}{D_{\text{ht}} + D_{\text{hs}}} \right)$$

Eq. 1066.820-1

Where:

m_c = the combined mass emissions determined from the cold-start UDDS test interval (generally known as bag 1 and bag 2), in grams.

D_{ct} = the measured driving distance from the transient portion of the cold-start test (bag 1), in miles.

D_{cs} = the measured driving distance from the stabilized portion of the cold-start test (bag 2), in miles.

m_h = the combined mass emissions determined from the hot-start UDDS test interval in grams. This is the hot-stabilized portion from either the first or second UDDS (bag 2, unless you measure bag 4), in addition to the hot transient portion (bag 3).

D_{ht} = the measured driving distance from the transient portion of the hot-start test (bag 3), in miles.

D_{hs} = the measured driving distance from the stabilized portion of the hot-start test (bag 4), in miles. Set $D_{hs} = D_{cs}$ for testing where the hot-stabilized portion of the UDDS is not run.

(c) Calculate the final composite PM test results as a mass-weighted value, $e_{PM-FTPcomp}$, in grams per mile as follows:

(1) Use the following equation for PM measured as described in §1066.815(b)(1), (2), or (3):

$$e_{\text{PM-FTPcomp}} = 0.43 \cdot \left(\frac{m_{\text{PM-cUDDS}}}{D_{\text{ct}} + D_{\text{cs}}} \right) + 0.57 \cdot \left(\frac{m_{\text{PM-hUDDS}}}{D_{\text{ht}} + D_{\text{hs}}} \right)$$

Eq. 1066.820-2

Where:

$m_{PM-cUDDS}$ = the combined PM mass emissions determined from the cold-start UDDS test interval (bag 1 and bag 2), in grams, as calculated using Eq. 1066.605–3.

$m_{PM-hUDDS}$ = the combined PM mass emissions determined from the hot-start UDDS test interval (bag 3 and bag 4), in grams, as calculated using Eq. 1066.605–3. This is the hot-stabilized portion from either the first or second UDDS (bag 2, unless you measure bag 4), in addition to the hot transient portion (bag 3).

(2) Use the following equation for PM measured as described in §1066.815(b)(4):

$$e_{\text{PM-FTPcomp}} = \frac{m_{\text{PM}}}{\left(0.43 \cdot D_{\text{ct}}\right) + D_{\text{cs}} + \left(0.57 \cdot D_{\text{ht}}\right)}$$

Eq. 1066.820-3

Where:

m_{PM} = the combined PM mass emissions determined from the cold-start UDDS test interval and the first 505 seconds of the hot-start UDDS test interval (bag 1, bag 2, and bag 3), in grams, as calculated using Eqs. 1066.605–4 and 1066.605–5.

(3) Use the following equation for PM measured as described in §1066.815(b)(5):

$$e_{\text{PM-FTPcomp}} = \frac{m_{\text{PM}}}{0.43 \cdot \left(D_{\text{ct}} + D_{\text{cs}}\right) + 0.57 \cdot \left(D_{\text{ht}} + D_{\text{hs}}\right)}$$

Eq. 1066.820-4

Where:

m_{PM} = the combined PM mass emissions determined from the cold-start UDDS test interval and the hot-start UDDS test interval (bag 1, bag 2, bag 3, and bag 4), in

grams, as calculated using Eqs. 1066.605–6 and 1066.605–7.

[79 FR 23823, Apr. 28, 2016, as amended at 81 FR 74214, Oct. 25, 2016]

§ 1066.830 Supplemental Federal Test Procedures; overview.

Sections 1066.831 and 1066.835 describe the detailed procedures for the Supplemental Federal Test Procedure (SFTP). This testing applies for all vehicles subject to the SFTP standards in 40 CFR part 86, subpart S. The SFTP test procedure consists of FTP testing and two additional test elements—a sequence of vehicle operation with more aggressive driving and a sequence of vehicle operation that accounts for the impact of the vehicle's air conditioner.

(a) The SFTP standard applies as a composite representing the three test elements. The emission results from the aggressive driving test element (§ 1066.831), the air conditioning test element (§ 1066.835), and the FTP test element (§ 1066.820) are analyzed according to the calculation methodology and compared to the applicable SFTP emission standards as described in 40 CFR part 86, subpart S.

(b) The test elements of the SFTP may be run in any sequence that includes the specified preconditioning steps.

§ 1066.831 Exhaust emission test procedures for aggressive driving.

(a) This section describes how to test using the US06 or LA–92 driving schedule. The US06 driving schedule can be divided into two test intervals—the US06 City cycle comprises the combined portions of the cycle from 1 to 130 seconds and from 495 to 596 seconds, and the US06 Highway cycle comprises the portion of the cycle between 130 and 495 seconds. See § 1066.801 for further information on the driving schedules.

(b) Take the following steps to precondition vehicles for testing under this section:

(1) Drain and refill the vehicle's fuel tank(s) in any of the following cases:

(i) For aggressive-driving tests that do not follow FTP or HFET testing.

(ii) For a test element that starts more than 72 hours after the most recent FTP or HFET measurement (with or without evaporative emission measurements).

(iii) For testing in which the test vehicle has not remained in an area where ambient temperatures were within the range specified for testing since the previous FTP or HFET.

(2) Keep ambient temperatures within the ranges specified for test measurements throughout the preconditioning sequence.

(3) Warm up the vehicle to a stabilized condition as follows:

(i) Push or drive the vehicle onto the dynamometer.

(ii) Operate the vehicle one time over one of the driving schedules specified in this paragraph (b)(3)(ii). You may ask us to use a particular preconditioning driving schedule if that is related to fuel effects on adaptive memory systems. For our testing, we will generally operate the vehicle over the same preconditioning cycle that will be used for testing in this section. You may exercise your sampling equipment, but you may not determine emissions results during preconditioning. Choose from the following driving schedules:

(A) The first 505 seconds of the UDDS (bag 1).

(B) The last 867 seconds of the UDDS (bag 2).

(C) The HFET driving schedule.

(D) US06 driving schedule or, for heavy-duty vehicles at or below 10,000 pounds GVWR with a power-to-weight ratio at or below 0.024 hp/lbm, just the highway portion of the US06 driving schedule.

(E) The SC03 driving schedule.

(F) The LA–92 driving schedule.

(G) The Hot LA–92 driving schedule.

(4) Allow the vehicle to idle for (1 to 2) minutes. This leads directly into the test measurements described in paragraph (c) of this section.

(c) For testing involving the full US06 driving schedule, you may collect emissions from separate city and highway test intervals (see 40 CFR part 600), or you may collect emissions over the full US06 driving schedule as a single test interval. Take the following steps to measure emissions over separate city and highway test intervals:

(1) At 130 seconds, simultaneously stop all US06 City, and start all US06

Highway sampling, recording, and integrating (including background sampling). At 136 seconds (before the acceleration), record the measured dynamometer roll revolutions.

(2) At 495 seconds, simultaneously stop all US06 Highway, and start all US06 City sampling, recording, and integrating (including background sampling). At 500 seconds (before the acceleration), record the measured dynamometer roll revolutions.

(3) Except as specified in paragraph (c)(4) of this section, treat the emissions from the first and second portions of the US06 City test interval as a single sample.

(4) If you collect gaseous emissions over separate city and highway test intervals, you may still collect PM over the full US06 driving schedule as a single test interval. If you do this, calculate a composite dilution factor based on city and highway emissions using Eq. 1066.610–4 to show that you meet the dilution factor requirements of § 1066.110(b)(2)(iii)(B).

(d) For diesel-fueled vehicles, measure THC emissions on a continuous basis as described in 40 CFR part 1065. For separate measurement of the city and highway test intervals as described in paragraph (c) of this section, perform separate calculations for each portion of the test cycle.

(e) Follow the exhaust emission measurement procedures specified in §§ 1066.410 through 1066.425, subject to the following exceptions and additional provisions:

(1) Following the preconditioning specified in paragraph (b) of this section, place the vehicle in gear and simultaneously start sampling and recording. Begin the first acceleration 5 seconds after placing the vehicle in gear.

(2) Operate the vehicle over the full US06 driving schedule, except as follows:

(i) For heavy-duty vehicles above 10,000 pounds GVWR, operate the vehicle over the Hot LA–92 driving schedule.

(ii) Heavy-duty vehicles at or below 10,000 pounds GVWR with a power-to-weight ratio at or below 0.024 hp/lbm may be certified using only the highway portion of the US06 driving schedule as described in 40 CFR 86.1816.

(iii) Non-MDPV heavy-duty vehicles shall be tested at their adjusted loaded vehicle weight as described in 40 CFR 86.1816.

(3) Turn the engine off 2 seconds after the end of the last deceleration. Five seconds after the engine stops running, stop all sampling and recording, including background sampling. Stop any integrating devices and indicate the end of the test cycle in the recorded data. Note that the 5 second delay is intended to account for sampling system transport.

(4) Correct calculated NO_X emissions as described in § 1066.615(a)(1).

[79 FR 23823, Apr. 28, 2014, as amended at 80 FR 9124, Feb. 19, 2015]

§ 1066.835 Exhaust emission test procedure for SC03 emissions.

This section describes how to test using the SC03 driving schedule (see § 1066.801). This procedure is designed to determine gaseous exhaust emissions while simulating an urban trip on a hot summer day. The provisions of 40 CFR part 86 and 40 CFR part 600 waive SC03 testing for some vehicles; in those cases, calculate SFTP composite emissions by adjusting the weighting calculation as specified in 40 CFR part 86, subpart S.

(a) Drain and refill the vehicle's fuel tank(s) if testing starts more than 72 hours after the last drain and fill operation.

(b) Keep the vehicle in an environment meeting the conditions described in paragraph (f) of this section throughout the preconditioning sequence.

(c) Warm up the vehicle to a stabilized condition as follows:

(1) Push or drive the test vehicle onto the dynamometer.

(2) Close the vehicle's windows before testing.

(3) The test cell and equipment must meet the specifications in paragraph (e) of this section. Measure and control ambient conditions as specified in paragraph (f) of this section.

(4) Set the vehicle's air conditioning controls by selecting A/C mode and ''maximum'', setting airflow to ''recirculate'' (if so equipped), selecting the

highest fan setting, and turning the A/C temperature to full cold (or 72 °F for automatic systems). Turn the control to the ''on'' position before testing so the air conditioning system is active whenever the engine is running.

(5) Perform a preconditioning drive by operating the test vehicle one time over the first 505 seconds of the UDDS (bag 1), the last 867 seconds of the UDDS (bag 2), or the SC03 driving schedule. If the air conditioning test sequence starts more than 2 hours after a different exhaust emission test, you may instead operate the vehicle one time over the full UDDS.

(6) Following the preconditioning drive, turn off the test vehicle and the vehicle cooling fan(s) and allow the vehicle to soak for (9 to 11) minutes.

(d) Follow the exhaust emission measurement procedures specified in §§ 1066.410 through 1066.425, subject to the following exceptions and additional provisions:

(1) Place the vehicle in gear 15 seconds after engine starting, which is 3 seconds before the first acceleration. Follow the SC03 driving schedule.

(2) Turn the engine off 2 seconds after the end of the last deceleration. Five seconds after the engine stops running, stop all sampling and recording, including background sampling. Stop any integrating devices any indicate the end of the test cycle in the recorded data. Note that the 5 second delay is intended to account for sampling system transport.

(3) Correct calculated NO_X emissions as described in § 1066.615(a)(2).

(e) The following requirements apply for the test cell and cooling fan configuration:

(1) *Minimum test cell size*. The test cell must be at least 20 feet wide, 40 feet long, and 10 feet high, unless we approve the use of a smaller test cell. We will approve this only if you demonstrate that the smaller test cell is capable of meeting all the requirements of this section.

(2) *Vehicle frontal air flow*. Verify that the fan configuration meets the requirements of § 1066.105(c)(5).

(f) Maintain ambient conditions as follows:

(1) *Ambient temperature and humidity*. Measure and record ambient temperature and humidity in the test cell at least once every 30 seconds during the sampling period. Alternatively, if you collect data of at least once every 12 seconds, you may use a moving average of up to 30 second intervals to measure and record ambient temperature and humidity. Control ambient temperature throughout the test sequence to 35.0 ±3.0 °C. Control ambient temperature during emission sampling to (33.6 to 36.4) °C on average. Control ambient humidity during emission sampling as described in § 1066.420(d).

(2) *Conditions before and after testing*. Use good engineering judgment to demonstrate that you meet the specified instantaneous temperature and humidity tolerances in paragraphs (f)(1) of this section at all times before and between emission measurements.

(3) *Solar heat load*. Simulate solar heating as follows:

(i) You may use a metal halide lamp, a sodium lamp, or a quartz halogen lamp with dichroic mirrors as a radiant energy emitter. We may also approve the use of a different type of radiant energy emitter if you demonstrate that it meets the requirements of this section.

(ii) We recommend achieving radiant heating with spectral distribution characteristics as described in the following table:

TABLE 1 OF § 1066.835—RECOMMENDED SPECTRAL DISTRIBUTION

Band width (nm)	Percent of total spectrum	
	Lower limit (%)	Upper limit (%)
<320 [a]	.....	0
320–400	0	7
400–780	45	55
>780	35	53

[a] Note that you may need to filter the UV region between 280 and 320 nm.

(iii) Determine radiant energy intensity experienced by the vehicle as the average value between two measurements along the vehicle's centerline, one at the base of the windshield and the other at the bottom of the rear window (or equivalent location for vehicles without a rear window). This value must be 850 ±45 W/m^2. Instruments for measuring radiant energy intensity must meet the following minimum specifications:

(A) Sensitivity of 9 microvolts per W/m^2.

(B) Response time of 5 seconds. For purposes of this requirement, ''response time'' means the time for the instrument to reach 95 percent of its equilibrium response after a step change in radiant intensity.

(C) Cosine response error of no more than ±1% for 0–70 degree zenith angles. The cosine response error is the percentage difference between the intensity measured at a given angle and a reference value, where the reference value is the intensity predicted from the zero-degree intensity and the cosine of the incident angle.

(D) When comparing measured values for radiant energy to reference values, each measured value over the full range of measurement may not deviate from the corresponding reference value by more than ±0.5% of the analyzer range's maximum value.

(iv) Check the uniformity of radiant energy intensity at least every 500 hours of emitter usage or every 6 months, whichever is sooner, and after any major modifications affecting the solar simulation. Determine uniformity by measuring radiant energy intensity using instruments that meet the specifications described in paragraph (f)(3)(iii) of this section at each point of a 0.5 m grid over the vehicle's full footprint, including the edges of the footprint, at an elevation 1 m above the floor. Measured values of radiant energy intensity must be between (722 and 978) W/m^2 at all points.

[79 FR 23823, Apr. 28, 2014, as amended at 80 FR 9124, Feb. 19, 2015; 81 FR 74214, Oct. 25, 2016]

EFFECTIVE DATE NOTE: At 86 FR 34584, June 29, 2021, § 1066.835 was amended, effective July 29, 2021.

§ 1066.840 Highway fuel economy test procedure.

This section describes the procedure for the highway fuel economy test (HFET). This test involves emission sampling and fuel economy measurement for certain vehicles as described in 40 CFR part 86, subpart S, and in 40 CFR part 600. See § 1066.801 for further information on the driving schedules. Follow the exhaust emission measurement procedures specified in §§ 1066.410 through 1066.425, subject to the following exceptions and additional provisions:

(a) Perform the HFET immediately following the FTP when this is practical. If the HFET procedure starts more than 3 hours after an FTP (including evaporative emission measurements, if applicable), operate it over one UDDS to precondition the vehicle. We may approve additional preconditioning in unusual circumstances.

(b) Operate the vehicle over the HFET driving schedule for preconditioning. Allow the vehicle to idle for 15 seconds (with the vehicle in gear), then start a repeat run of the HFET driving schedule and simultaneously start sampling and recording.

(c) Turn the engine off at the end of the HFET driving schedule and stop all sampling and recording, including background. Stop any integrating devices and indicate the end of the test cycle in the recorded data.

§ 1066.845 AC17 air conditioning efficiency test procedure.

(a) *Overview*. This section describes a voluntary procedure for measuring the net impact of air conditioner operation on CO_2 emissions. See 40 CFR 86.1868 for provisions describing how to use these procedures to calculate credits and otherwise comply with emission standards.

(b) *Test cell*. Operate the vehicle in a test cell meeting the specifications described in § 1066.835(e). You may add airflow up to a maximum of 4 miles per hour during engine idling and when the engine is off if that is needed to meet ambient temperature or humidity requirements.

(c) *Ambient conditions*. Measure and control ambient conditions as specified in § 1066.835(f), except that you must control ambient temperature during emission sampling to (22.0 to 28.0) °C throughout the test and (23.5 to 26.5) °C on average. These tolerances apply to the combined SC03 and HFET drive cycles during emission sampling. Note that you must set the same ambient temperature target for both the air conditioning on and off portions of emission sampling. Control ambient temperature during the preconditioning cycle and 30 minute soak to

25.0 ±5.0 °C. For these same modes with no emission sampling, target the specified ambient humidity levels, but you do not need to meet the humidity tolerances. Note that solar heating is disabled for certain test intervals as described in this section.

(d) *Interior air temperature measurement.* Measure and record the vehicle's interior air temperature at least once every 5 seconds during the sampling period. Measure temperature at the outlet of the center-most duct on the dashboard, and approximately 30 mm behind the driver's headrest and passenger's headrest.

(e) *Air conditioning system settings.* For testing that requires the air conditioning to be operating, set the vehicle's air conditioning controls as follows:

(1) For automatic systems, set the temperature control to 72 °F (22 °C).

(2) For manual systems, select A/C mode, set the temperature to full cold and ''maximum'', set airflow to ''recirculate'' (if so equipped), and select the highest fan setting. During the first idle period of the SC03 driving schedule (between 186 and 204 seconds), reduce the fan speed setting to nominally 50% of maximum fan speed, set airflow to ''fresh air'' (if so equipped), and adjust the temperature setting to target a temperature of 55 °F (13 °C) at the dashboard air outlet. Maintain these settings for the remainder of the test. You may rely on prior temperature measurements to determine the temperature setting; however, if the system is unable to meet the 55 °F (13 °C) target, you may instead set airflow to ''fresh air'' and temperature to full cold. If the vehicle is equipped with technology that defaults to recirculated air at ambient temperatures above 75 °F (22 °C), that technology should remain enabled throughout the test; this may mean not setting the airflow to ''recirculate'' at the start and not setting the airflow to ''fresh air'' during the first idle period of the SC03 driving schedule. Except as specified in paragraph (e)(3) of this section, use good engineering judgment to apply the settings described in this paragraph (e)(2) equally throughout the vehicle if there are separate controls for different zones (such as rear air conditioning).

(3) If the air conditioning system is designed with parameters that switch back to a default setting at key-off, perform testing in that default condition. If the air conditioning system includes any optional equipment or user controls not addressed in this paragraph (e), the manufacturer should ask us for preliminary approval to determine the appropriate settings for testing.

(f) *Test procedure.* Follow the exhaust emission measurement procedures specified in §§1066.410 through 1066.425, subject to the following exceptions and additional provisions:

(1) Prepare each test vehicle for a series of tests according to 40 CFR 86.132–00(a) through (g). If the vehicle has been tested within the last 36 hours concluding with a 12 to 36 hour soak, continue to paragraph (f)(2) of this section; otherwise perform an additional UDDS preconditioning cycle that concludes with a 12 to 36 hour soak. You may use a forced cooldown system to bring critical vehicle temperatures to within soak temperature limits. Critical temperatures include transmission oil, engine oil, engine coolant, and cabin air temperatures.

(2) Open the vehicle's windows and operate the vehicle over a preconditioning UDDS with no solar heating and with the air conditioning off. At the end of the preconditioning drive, turn off the test vehicle and all cooling fans.

(3) Turn on solar heating within one minute after turning off the engine. Once the solar energy intensity reaches 805 W/m^2, let the vehicle soak for 30 ±1 minutes. You may alternatively rely on prior measurements to start the soak period after a defined period of warming up to the specified solar heat load. Close the vehicle's windows at the start of the soak period; ensure that the windows are adequately closed where instrumentation and wiring pass through to the interior.

(4) Turn the air conditioning control to the ''on'' position before testing so the air conditioning system is active whenever the engine is running. Place the vehicle in gear 15 seconds after engine starting, which is 3 seconds before the first acceleration. At the end of the driving schedule, simultaneously

switch all the sampling, recording, and integrating from SC03 to HFET, including background sampling. Indicate the end of the test cycle in the recorded data. Record the measured dynamometer roll revolutions corresponding to the SC03 driving schedule.

(5) Directly following the SC03 driving schedule, operate the vehicle over the HFET driving schedule. Turn the vehicle off at the end of the driving schedule and simultaneously stop all sampling, recording, and integrating, including background sampling. Indicate the end of the test cycle in the recorded data. Record the measured dynamometer roll revolutions corresponding to the HFET drive schedule. Turn off the solar heating.

(6) Allow the vehicle to remain on the dynamometer for (10 to 15) minutes after emission sampling has concluded. Repeat the testing described in paragraphs (f)(1) through (5) of this section and turn off the vehicle's air conditioner and the solar heating throughout the test run. The windows may be open or closed.

(g) *Calculations.* (1) Determine the mass of CO_2 emissions for each of the two test intervals as described in § 1066.605.

(2) Calculate the composite mass-weighted emissions of CO_2, $e_{CO2\text{-}AC17comp}$, representing the average of the SC03 and HFET emissions, in grams per mile using the following equation:

$$e_{\text{CO2-AC17comp}} = 0.5 \cdot \left(\frac{m_{\text{SC03}}}{D_{\text{SC03}}} \right) + 0.5 \cdot \left(\frac{m_{\text{HFET}}}{D_{\text{HFET}}} \right)$$

Where:

m_{SC03} = mass emissions from the SC03 test interval, in grams.

D_{SC03} = measured driving distance during the SC03 test interval, in miles.

m_{HFET} = mass emissions from the HFET test interval, in grams.

D_{HFET} = measured driving distance during the HFET test interval, in miles.

[79 FR 23823,Apr. 28, 2014, as amended at 79 FR 36658, June 30, 2014; 80 FR 9124, Feb. 19, 2015]

Subpart J—Evaporative Emission Test Procedures

§ 1066.901 Applicability and general provisions.

This subpart describes how to measure evaporative and refueling emissions from test vehicles. The provisions of §§ 1066.910 through 1066.930 include general provisions for equipment and calculations related to evaporative and refueling emissions. The provisions of §§ 1066.950 through 1066.985 describe provisions that apply specifically to motor vehicles subject to standards under 40 CFR part 86, subpart S, or 40 CFR part 1037.

TEST EQUIPMENT AND CALCULATIONS FOR EVAPORATIVE AND REFUELING EMISSIONS

§ 1066.910 SHED enclosure specifications.

Enclosures for evaporative and refueling emissions must meet the specifications described in 40 CFR 86.106–96, 86.107–96(a), and 86.107–98(a).

§ 1066.915 Enclosures; auxiliary systems and equipment.

Enclosures for evaporative and refueling emissions must be equipped with fans, blowers, and measurement and data recording equipment as described in 40 CFR 86.107–98(b) through (h) and (j).

§ 1066.920 Enclosure calibrations.

Enclosures for evaporative and refueling emissions must meet the calibration specifications described in 40 CFR 86.116–94 and 86.117–96.

§ 1066.925 Enclosure calculations for evaporative and refueling emissions.

Calculate emissions for evaporative emissions as described in 40 CFR 86.143–96. Calculate emissions for refueling

emissions as described in 40 CFR 86.143–96 and 86.156–98.

§ 1066.930 Equipment for point-source measurement of running losses.

For point-source measurement of running loss emissions, use equipment meeting the specifications in 40 CFR 86.107–96(i)

EFFECTIVE DATE NOTE: At 86 FR 34585, June 29, 2021, § 1066.930 was revised, effective July 29, 2021.

EVAPORATIVE AND REFUELING EMISSION TEST PROCEDURES FOR MOTOR VEHICLES

§ 1066.950 Fuel temperature profile.

Develop fuel temperature profiles for running loss testing as described in 40 CFR 86.129–94(d).

§ 1066.955 Diurnal emission test.

Test vehicles for diurnal emissions as described in 40 CFR 86.133–96.

§ 1066.960 Running loss test.

Test vehicles for running loss emissions as described in 40 CFR 86.134–96.

§ 1066.965 Hot soak test.

Test vehicles for hot soak emissions as described in 40 CFR 86.138–96.

§ 1066.970 Refueling test for liquid fuels.

Except as described in § 1066.975, test vehicles for refueling emissions as described in 40 CFR 86.150–98, 86.151–98, 86.152–98, and 86.154–98. Keep records as described in 40 CFR 86.155–98.

§ 1066.971 Vehicle and canister preconditioning for the refueling test.

Precondition vehicles for the refueling emission test as described in 40 CFR 86.153–98.

§ 1066.975 Refueling test for LPG.

For vehicles designed to operate on liquefied petroleum gas, measure refueling emissions as described in 40 CFR 86.157–98.

§ 1066.980 Fuel dispensing spitback procedure.

Test vehicles for spitback emissions as described in 40 CFR 86.146–96.

§ 1066.985 Fuel storage system leak test procedure.

(a) *Scope.* Perform this test as required in the standard-setting part to verify that there are no significant leaks in your fuel storage system.

(b) *Measurement principles.* Leaks are detected by measuring pressure, temperature, and flow to calculate an equivalent orifice diameter for the system. Use good engineering judgment to develop and implement leak test equipment. You may not tighten fittings or connections in the vehicle's fuel system to prepare the vehicle for testing.

(c) *Measurement equipment.* Your leak test equipment must meet the following requirements:

(1) Pressure, temperature, and flow sensors must be calibrated with NIST-traceable standards.

(2) Correct flow measurements to standard reference conditions.

(3) Leak test equipment must have the ability to pressurize fuel storage systems to at least 4.1 kPa and have an internal leak rate of less than 0.20 standard liters per minute.

(4) You must be able to attach the test equipment to the vehicle without permanent alteration of the fuel storage or evaporative emission control systems. For any testing that involves pressurizing the fuel system and detecting leaks at access points away from the fuel fill pipe, the gas cap must be installed in the production configuration. For the test point at or near the fuel fill pipe, attaching the test equipment may involve adding an extension to the fuel fill pipe that incorporates the access point to the fuel system. If the extension apparatus has a fixed cap, the vehicle's gas cap must be tested separately as described in paragraph (d)(9) of this section. This separate testing is not required if the extension apparatus incorporates the vehicle's gas cap.

(5) The point of attachment to the fuel storage system must allow pressurization to test system integrity of the fuel tank and of fuel lines and vapor lines reaching up to and including the gas cap and the evaporative canister. The evaporative system test port available on some vehicles is an example of an effective attachment point.

(d) *Leak test procedure.* Test a vehicle's fuel storage system for leaks as follows:

(1) Refuel vehicle to 40% of its nominal fuel tank capacity.

(2) Soak the vehicle for 6 to 24 hours at a temperature between (20 and 30) °C; record this setpoint temperature and maintain temperatures throughout the leak test at this setpoint temperature within a tolerance ±2 °C.

(3) Before performing the test, purge the fuel storage system of any residual pressure, bringing the system into equilibrium with ambient pressure.

(4) Seal the evaporative canister's vent to atmosphere and ensure that the vehicle's purge valve is closed.

(5) Attach the leak test equipment to the vehicle.

(6) Pressurize the fuel storage system with N_2 or another inert gas 9392.....to at least 2.4 kPa. Use good engineering judgment to avoid overpressurizing the system.

(7) Maintain gas flow through the system for at least 180 seconds, ensuring that the flow reading is stable for an effective leak diameter of ±0.002 inches.

(8) Use the following equation, or a different equation you develop based on good engineering judgment, to calculate the effective leak diameter, d_{eff}:

$$d_{eff} = 7.844 \cdot \left(\frac{\dot{Q}_{N2}}{\sqrt{\frac{(p_{in} - p_{atmos}) \cdot (p_{in} + p_{atmos})}{SG_{N_2} \cdot T}}} \right)^{0.5057}$$

Eq. 1066.985-1

Where:

d_{eff} = effective leak diameter, in inches, expressed to at least two decimal places.

$\dot{Q}_{N2}$= volumetric flow of nitrogen, in m³/s.

p_{in} = inlet pressure to orifice, in kPa.

p_{atmos} = atmospheric pressure, in kPa.

SG_{N2} = specific gravity of N_2 relative to air at 101.325 kPa and 15.5 °C = 0.967.

T = temperature of flowing medium, in K.

Example:

$\dot{Q}_{N2}$= $0.8 \cdot 10^{-5}$ m³/s

p_{in} = 104.294 kPa

p_{atmos} = 101.332 kPa

SG_{N2} = 0.967

T = 298.15 K

$$d_{eff} = 7.844 \cdot \left(\frac{0.8 \cdot 10^{-5}}{\sqrt{\frac{(104.294 - 101.332) \cdot (104.294 + 101.332)}{0.967 \cdot 298.15}}} \right)^{0.5057}$$

d_{eff} = 0.017 inches

(9) Repeat the test described in this paragraph (d) for each access point described in the application for certification. Use each test result (without averaging) to determine whether the vehicle passes the leak standard.

(10) Gas caps may need to be tested separately for leaks as described in paragraph (c)(4) of this section. Test

the gas caps using commercially available flow equipment such as that used for inspection-and-maintenance programs for motor vehicles to determine a leak rate in cubic centimeters per minute resulting from a sustained tank pressure of 7.5 kPa. Correct the leak rate to standard reference conditions, based on the measured leak rate corresponding to atmospheric pressure. The corrected leak value may not exceed 60 cubic centimeters per minute.

(11) You may use special or alternative test procedures as described in 40 CFR 1065.10(c).

(e) *Equipment calibration*. Use good engineering judgment to calibrate the leak check device.

[79 FR 23823, Apr. 28, 2014, as amended at 80 FR 9124, Feb. 19, 2015; 81 FR 74215, Oct. 25, 2016]

Subpart K—Definitions and Other Reference Material

§ 1066.1001 Definitions.

The definitions in this section apply to this part. The definitions apply to all subparts unless we note otherwise. Other terms have the meaning given in 40 CFR part 1065. The definitions follow:

Average means the arithmetic mean of a sample.

Bag 1 means relating to the first 505 seconds of the FTP cold-start test interval. Note that the term bag 1 may also apply to measurement of constituents that are not collected in a bag, such as PM and continuously measured THC.

Bag 2 means relating to the last 867 seconds of the FTP cold-start test interval.

Bag 3 means relating to the first 505 seconds of the FTP hot-start test interval.

Bag 4 means relating to the last 867 seconds of the FTP hot-start test interval, if run. Note that bag 2 is generally used in place of bag 4.

Base inertia means a value expressed in mass units to represent the rotational inertia of the rotating dynamometer components between the vehicle driving tires and the dynamometer torque-measuring device, as specified in § 1066.250.

C_1-equivalent means a convention of expressing HC concentrations based on the total number of carbon atoms present, such that the C_1-equivalent of an HC concentration equals the concentration multiplied by the mean number of carbon atoms in each HC molecule. For example, the C_1-equivalent of 10 ppm of propane (C_3H_8) is 30 ppm. C_1-equivalent concentration values may be denoted as ''ppmC'' in the standard-setting part. Densities may also be expressed on a C_1 basis. Note that calculating HC masses from concentrations and densities is only valid where they are each expressed on the same carbon basis.

Driving schedule means a series of vehicle speeds that a vehicle must follow during a test. Driving schedules are specified in the standard-setting part. A driving schedule may consist of multiple test intervals.

Duty cycle means a set of weighting factors and the corresponding test cycles, where the weighting factors are used to combine the results of multiple test intervals into a composite result.

FTP means one of the following:

(1) The test cycle consisting of one UDDS as specified in paragraph (a) of Appendix I of 40 CFR part 86, followed by a 10-minute soak with the engine off and repeat driving through the first 505 seconds of the UDDS. See § 1066.801(c)(1).

(2) The entire test procedure for measuring exhaust and/or evaporative emissions as described in § 1066.801(c).

Footprint has the meaning given in the standard-setting part.

HFET means the test cycle specified in Appendix I of 40 CFR part 600.

Hot LA–92 means the first 1435 seconds of the LA–92 driving schedule.

LA–92 means the test cycle specified in Appendix I, paragraph (c), of 40 CFR part 86.

Nonmethane organic gas (NMOG) means the combination of organic gases other than methane as calculated in § 1066.635. Note that for this part, the organic gases are summed on a mass basis without any adjustment for photochemical reactivity.

Parts-per-million (ppm) means ppm on a molar basis. For hydrocarbon concentrations including HC, THC, NMHC,

and NMOG, ppm means ppm on a C_1-equivalent molar basis.

Road-load coefficients means sets of A, B, and C road-load force coefficients that are used in the dynamometer road-load simulation, where road-load force at speed v equals $A + B \cdot v + C \cdot v^2$.

SC03 means the test cycle specified in Appendix I, paragraph (h), of 40 CFR part 86.

SFTP means the collection of test cycles as given in 1066.801(c)(2).

Standard reference conditions means the following:

(1) *Standard pressure* is 101.325 kPa.

(2) *Standard temperature* is 293.15 K.

Test interval means a period over which a vehicle's emission rates are determined separately. For many standards, compliance with the standard is based on a weighted average of the mass emissions from multiple test intervals. For example, the standard-setting part may specify a complete duty cycle as a cold-start test interval and a hot-start test interval. In cases where multiple test intervals occur over a duty cycle, the standard-setting part may specify additional calculations that weight and combine results to arrive at composite values for comparison against the applicable standards.

Test weight has the meaning given in §§ 1066.410(b) or 1066.805.

UDDS means the test cycle specified in Appendix I, paragraph (a), of 40 CFR part 86.

US06 means the test cycle specified in Appendix I, paragraph (g), of 40 CFR part 86.

Unloaded coastdown means a dynamometer coastdown run with the vehicle wheels removed from the roll surface.

We (us, our) means the Administrator of the Environmental Protection Agency and any authorized representatives.

[79 FR 23823, Apr. 28, 2014, as amended at 80 FR 9124, Feb. 19, 2015]

§ 1066.1005 Symbols, abbreviations, acronyms, and units of measure.

The procedures in this part generally follow either the International System of Units (SI) or the United States customary units, as detailed in NIST Special Publication 811, which we incorporate by reference in § 1066.1010. See 40 CFR 1065.20 for specific provisions related to these conventions. This section summarizes the way we use symbols, units of measure, and other abbreviations.

(a) *Symbols for quantities*. This part uses the following symbols and units of measure for various quantities:

Symbol	Quantity	Unit	Unit symbol	Unit in terms of SI base units
α	atomic hydrogen to carbon ratio.	mole per mole	mol/mol	1.
A	area	square meter	m^2	m^2.
A	vehicle frictional load	pound force or newton	lbf or N	$m \cdot kg \cdot s^{-2}$.
a_g	acceleration of Earth's gravity.	meters per second squared	m/s^2	$m \cdot s^{-2}$.
A_m	calculated vehicle frictional load.	pound force or newton	lbf or N	$m \cdot kg \cdot s^{-2}$.
a_0	intercept of least squares regression.			
a_1	slope of least squares regression.			
a	acceleration	feet per second squared or meters per second squared.	ft/s^2 or m/s^2	$m \cdot s^{-2}$.
B	vehicle load from drag and rolling resistance.	pound force per mile per hour or newton second per meter.	lbf/(mi/hr) or N·s/m.	$kg \cdot s^{-1}$.
β	ratio of diameters	meter per meter	m/m	1.
β	atomic oxygen to carbon ratio.	mole per mole	mol/mol	1.
c	conversion factor			
C	vehicle-specific aerodynamic effects.	pound force per mile per hour squared or newton-second squared per meter squared.	$lbf/(mi/hr)^2$ or $N \cdot s^2/m^2$.	$m^{-1} \cdot kg$.

Symbol	Quantity	Unit	Unit symbol	Unit in terms of SI base units
$C_{\#}$	number of carbon atoms in a molecule.	$C_{\#}$	number of carbon atoms in a molecule.	$C_{\#}$.
C_d	discharge coefficient			
C_dA	drag area	meter squared	m^2	m^2.
C_f	flow coefficient			
C_p	heat capacity at constant pressure.	joule per kelvin	J/K	$m^2 \cdot kg \cdot s^{-2} \cdot K^{-1}$.
C_v	heat capacity at constant volume.	joule per kelvin	J/K	$m^2 \cdot kg \cdot s^{-2} \cdot K^{-1}$.
d	diameter	meters	m	m.
D	distance	miles or meters	mi or m	m.
D	slope correlation	pound force per mile per hour squared or newton second squared per meter squared.	$lbf/(mi/hr)^2$ or $N \cdot s^2/m^2$.	$m^{-2} \cdot kg$.
DF	dilution factor			1.
e	mass weighted emission result.	grams/mile	g/mi	
F	force	pound force or newton	lbf or N	$kg \cdot s^{-2}$.
f	frequency	hertz	Hz	s^{-1}.
f_n	angular speed (shaft)	revolutions per minute	r/min	$\pi \cdot 30 \cdot s^{-1}$.
FC	friction compensation error	horsepower or watt	W	$m^2 \cdot kg \cdot s^{-3}$.
FR	road-load force	pound force or newton	lbf or N	$kg \cdot s^{-2}$.
γ	ratio of specific heats	(joule per kilogram kelvin) per (joule per kilogram kelvin).	(J/(kg·K))/(J/(kg·K)).	1.
H	ambient humidity	grams water vapor per kilogram dry air.	g H_2O vapor/kg dry air.	g H_2O vapor/kg dry air.
Δh	change in height	meters	m	m.
I	inertia	pound mass or kilogram	lbm or kg	kg.
I	current	ampere	A	A.
i	indexing variable			
IR	inertia work rating			
K	correction factor			1.
K_v	calibration coefficient		$m^4 \cdot s \cdot K^{0.5}/kg$	$m^4 \cdot kg^{-1} \cdot s \cdot K^{0.5}$.
μ	viscosity, dynamic	pascal second	Pa·s	$m^{-1} \cdot kg \cdot s^{-1}$.
M	molar mass	gram per mole	g/mol	$10^{-3} \cdot kg \cdot mol^{-1}$.
M_e	effective mass	kilogram	kg	kg.
m	mass	pound mass or kilogram	lbm or kg	kg.
N	total number in series			
n	total number of pulses in a series.			
p	pressure	pascal	Pa	$m^{-1} \cdot kg \cdot s^{-2}$.
Δp	differential static pressure	pascal	Pa	$m^{-1} \cdot kg \cdot s^{-2}$.
p_d	saturated vapor pressure at ambient dry bulb temperature.	kilopascal	kPa	$m^{-1} \cdot kg \cdot s^{-2}$.
PF	penetration fraction			
ρ	mass density	kilogram per cubic meter	kg/m^3	$m^{-3} \cdot kg$.
R	dynamometer roll revolutions.	revolutions per minute	rpm	$\pi \cdot 30^{-1} \cdot s^{-1}$.
r	ratio of pressures	pascal per pascal	Pa/Pa	1.
r^2	coefficient of determination			
$Re^{\#}$	Reynolds number			
RF	response factor			
RH	relative humidity			
S	Sutherland constant	kelvin	K	K.
SEE	standard estimate of error			
SG	specific gravity			
Δs	distance traveled during measurement interval.	meters	m	m.
T	absolute temperature	kelvin	K	K.
T	Celsius temperature	degree Celsius	°C	$K - 273.15$.
T	torque (moment of force)	newton meter	N·m	$m^2 \cdot kg \cdot s^{-2}$.
t	time	hour or second	hr or s	s.
Δt	time interval, period, 1/frequency.	second	s	s.
U	voltage	volt	V	$m^2 \cdot kg \cdot s^{-3} \cdot A^{-1}$.
v	speed	miles per hour or meters per second.	mi/hr or m/s	$m \cdot s^{-1}$.
V	volume	cubic meter	m^3	m^3.
$\dot{V}$	flow volume rate	cubic feet per minute or cubic meter per second.	ft^3min or ms^3	$m^3 \cdot s^1$.

Symbol	Quantity	Unit	Unit symbol	Unit in terms of SI base units
VP	volume percent			
x	concentration of emission over a test interval.	part per million	ppm	
y	generic variable			
Z	compressibility factor			

(b) *Symbols for chemical species*. This part uses the following symbols for chemical species and exhaust constituents:

Symbol	Species
CH_4	methane.
CH_3OH	methanol.
CH_2O	formaldehyde.
C_2H_4O	acetaldehyde.
C_2H_5OH	ethanol.
C_2H_6	ethane.
C_3H_7OH	propanol.
C_3H_8	propane.
C_4H_{10}	butane.
C_5H_{12}	pentane.
CO	carbon monoxide.
CO_2	carbon dioxide.
H_2O	water.
HC	hydrocarbon.
N_2	molecular nitrogen.
NMHC	nonmethane hydrocarbon.
NMHCE	nonmethane hydrocarbon equivalent.
NMOG	nonmethane organic gas.
NO	nitric oxide.
NO_2	nitrogen dioxide.
NO_X	oxides of nitrogen.
N_2O	nitrous oxide.
O_2	molecular oxygen.
OHC	oxygenated hydrocarbon.
PM	particulate matter.
THC	total hydrocarbon.
THCE	total hydrocarbon equivalent.

(c) *Superscripts*. This part uses the following superscripts to define a quantity:

Superscript	Quantity
overbar (such as $\bar{y}$)	arithmetic mean.
overdot (such as $\dot{y}$)	quantity per unit time.

(d) *Subscripts*. This part uses the following subscripts to define a quantity:

Subscript	Quantity
0	reference.
abs	absolute quantity.
AC17	air conditioning 2017 test interval.
act	actual or measured condition.
actint	actual or measured condition over the speed interval.
adj	adjusted.
air	air, dry.
atmos	atmospheric.
b	base.
bkgnd	background.
c	cold.
comp	composite.
cor	corrected.
cs	cold stabilized.
ct	cold transient.
cUDDS	cold-start UDDS.
D	driven.
dew	dewpoint.
dexh	dilute exhaust quantity.
dil	dilute.
e	effective.
emission	emission specie.
error	error.
EtOH	ethanol.
exh	raw exhaust quantity.
exp	expected quantity.
fil	filter.
final	final.
flow	flow measurement device type.
gas	gaseous.
h	hot.
HFET	highway fuel economy test.
hs	hot stabilized.
ht	hot transient.
hUDDS	hot-start UDDS.
i	an individual of a series.
ID	driven inertia.
in	inlet.
int	intake.
init	initial quantity, typically before an emission test.
IT	target inertia.
liq	liquid.
max	the maximum (i.e. peak) value expected at the standard over a test interval; not the maximum of an instrument range.
meas	measured quantity.
mix	dilute exhaust gas mixture.
out	outlet.
PM	particulate matter.
record	record.
ref	reference quantity.
rev	revolution.
roll	dynamometer roll.
s	settling.
s	slip.
s	stabilized.
sat	saturated condition.
SC03	air conditioning driving schedule.
span	span quantity.
sda	secondary dilution air.
std	standard conditions.
T	target.
t	throat.
test	test quantity.
uncor	uncorrected quantity.
w	weighted.
zero	zero quantity.

(e) *Other acronyms and abbreviations*. This part uses the following additional abbreviations and acronyms:

A/C	air conditioning.
AC17	air conditioning 2017 test interval.

ALVW	adjusted loaded vehicle weight.
ASME	American Society of Mechanical Engineers.
CFR	Code of Federal Regulations.
CFV	critical-flow venturi.
CNG	compressed natural gas.
CVS	constant-volume sampler.
EPA	Environmental Protection Agency.
ETW	equivalent test weight.
EV	electric vehicle.
FID	flame-ionization detector.
FTP	Federal test procedure.
GC	gas chromatograph.
GEM	greenhouse gas emissions model.
GHG	greenhouse gas (including CO_2, N_2O, and CH_4).
GPS	global positioning system.
GVWR	gross vehicle weight rating.
HEV	hybrid electric vehicle, including plug-in hybrid electric vehicles.
HFET	highway fuel economy test.
HLDT	heavy light-duty truck.
HPLC	high pressure liquid chromatography.
IBR	incorporated by reference.
LA–92	Los Angeles 1992 driving schedule.
MDPV	medium-duty passenger vehicle.
NIST	National Institute for Standards and Technology.
NMC	nonmethane cutter.
PDP	positive-displacement pump.
PHEV	plug-in hybrid electric vehicle.
PM	particulate matter.
RESS	rechargeable energy storage system.
ppm	parts per million.
SAE	Society of Automotive Engineers.
SC03	air conditioning driving schedule.
SEA	selective enforcement audit.
SFTP	supplemental federal test procedure.
SI	International System of Units.
SSV	subsonic venturi.
UDDS	urban dynamometer driving schedule.
US06	aggressive driving schedule.
U.S.C.	United States Code.
WWV	NIST radio station call sign.

(f) This part uses the following densities of chemical species:

Symbol	Quantity [1] [2]	g/m³	g/ft³
ρ_{CH4}	density of methane	666.905	18.8847
ρ_{CH3OH}	density of methanol	1332.02	37.7185
ρ_{C2H5OH}	C_1-equivalent density of ethanol	957.559	27.1151
ρ_{C2H4O}	C_1-equivalent density of acetaldehyde	915.658	25.9285
ρ_{C3H8}	density of propane	611.035	17.3026
ρ_{C3H7OH}	C_1-equivalent density of propanol	832.74	23.5806
ρ_{CO}	density of carbon monoxide	1164.41	32.9725
ρ_{CO2}	density of carbon dioxide	1829.53	51.8064
$\rho_{HC\text{-}gas}$	effective density of hydrocarbon—gaseous fuel [3]	(see 3)	(see 3)
ρ_{CH2O}	density of formaldehyde	1248.21	35.3455
$\rho_{HC\text{-}liq}$	effective density of hydrocarbon—liquid fuel [4]	576.816	16.3336
$\rho_{NMHC\text{-}gas}$	effective density of nonmethane hydrocarbon—gaseous fuel [3]	(see 3)	(see 3)
$\rho_{NMHC\text{-}liq}$	effective density of nonmethane hydrocarbon—liquid fuel [4]	576.816	16.3336
$\rho_{NMHCE\text{-}gas}$	effective density of nonmethane equivalent hydrocarbon—gaseous fuel [3].	(see 3)	(see 3)
$\rho_{NMHCE\text{-}liq}$	effective density of nonmethane equivalent hydrocarbon—liquid fuel [4].	576.816	16.3336
ρ_{NOx}	effective density of oxides of nitrogen [5]	1912.5	54.156
ρ_{N2O}	density of nitrous oxide	1829.66	51.8103
$\rho_{THC\text{-}liq}$	effective density of total hydrocarbon—liquid fuel [4]	576.816	16.3336
$\rho_{THCE\text{-}liq}$	effective density of total equivalent hydrocarbon—liquid fuel [4]	576.816	16.3336

[1] Densities are given at 20 °C and 101.325 kPa.
[2] Densities for all hydrocarbon containing quantities are given in g/m³-carbon atom and g/ft³-carbon atom.
[3] The effective density for natural gas fuel and liquefied petroleum gas fuel are defined by an atomic hydrogen-to-carbon ratio, α, of the hydrocarbon components of the test fuel. $\rho_{HCgas} = 41.57 \cdot (12.011 + (\alpha \cdot 1.008))$.
[4] The effective density for gasoline and diesel fuel are defined by an atomic hydrogen-to-carbon ratio, α, of 1.85.
[5] The effective density of NO_X is defined by the molar mass of nitrogen dioxide, NO_2.

(g) *Constants.* (1) This part uses the following constants for the composition of dry air:

Symbol	Quantity	mol/mol
x_{Arair}	amount of argon in dry air	0.00934
x_{CO2air}	amount of carbon dioxide in dry air	0.000375
x_{N2air}	amount of nitrogen in dry air	0.78084
x_{O2air}	amount of oxygen in dry air	0.209445

(2) This part uses the following molar masses or effective molar masses of chemical species:

Symbol	Quantity	g/mol ($10^{-3} \cdot kg \cdot mol^{-1}$)
M_{air}	molar mass of dry air [1]	28.96559

Symbol	Quantity	g/mol ($10^{-3} \cdot kg \cdot mol^{-1}$)
M_{H2O}	molar mass of water	18.01528

[1] See paragraph (g)(1) of this section for the composition of dry air.

(3) This part uses the following molar gas constant for ideal gases:

Symbol	Quantity	J/(mol · K) ($m^2 \cdot kg \cdot s^{-2} \cdot mol^{-1} \cdot K^{-1}$)
R	molar gas constant	8.314472

(h) *Prefixes*. This part uses the following prefixes to define a quantity:

Symbol	Quantity	Value
n	nano	10^{-9}
µ	micro	10^{-6}
m	milli	10^{-3}
c	centi	10^{-2}
k	kilo	10^{3}
M	mega	10^{6}

[79 FR 23823, Apr. 28, 2014, as amended at 80 FR 9124, Feb. 19, 2015; 81 FR 74215, Oct. 25, 2016]

EFFECTIVE DATE NOTE: At 86 FR 34585, June 29, 2021, § 1066.1005 was amended, effective July 29, 2021.

§ 1066.1010 Incorporation by reference.

(a) Certain material is incorporated by reference into this part with the approval of the Director of the Federal Register under 5 U.S.C. 552(a) and 1 CFR part 51. To enforce any edition other than that specified in this section, a document must be published in the FEDERAL REGISTER and the material must be available to the public. All approved material is available for inspection at U.S. EPA, Air and Radiation Docket and Information Center, 1301 Constitution Ave. NW., Room B102, EPA West Building, Washington, DC 20460, (202) 202–1744, and is available from the sources listed below. It is also available for inspection at the National Archives and Records Administration (NARA). For information on the availability of this material at NARA, call 202–741–6030, or go to *http://www.archives.gov/federal_register/code_of_federal_regulations/ibr_locations.html*.

(b) *SAE International material*. The following standards are available from SAE International, 400 Commonwealth Dr., Warrendale, PA 15096–0001, (877) 606–7323 (U.S. and Canada) or (724) 776–4970 (outside the U.S. and Canada), or *http://www.sae.org:*

(1) SAE J1263, Road Load Measurement and Dynamometer Simulation Using Coastdown Techniques, revised March 2010, IBR approved for §§ 1066.301(b), 1066.305(a), and 1066.310(b).

(2) SAE J1634, Battery Electric Vehicle Energy Consumption and Range Test Procedure, revised October 2012, IBR approved for § 1066.501(a).

(3) SAE J1711, Recommended Practice for Measuring the Exhaust Emissions and Fuel Economy of Hybrid-Electric Vehicles, Including Plug-In Hybrid Vehicles, revised June 2010, IBR approved for § 1066.501(a).

(4) SAE J2263, Road Load Measurement Using Onboard Anemometry and Coastdown Techniques, revised December 2008, IBR approved for §§ 1066.301(b), 1066.305, and 1066.310(b).

(5) SAE J2264, Chassis Dynamometer Simulation of Road Load Using Coastdown Techniques, revised January 2014, IBR approved for § 1066.315.

(6) SAE J2711, Recommended Practice for Measuring Fuel Economy and Emissions of Hybrid-Electric and Conventional Heavy-Duty Vehicles, issued September 2002, IBR approved for § 1066.501(a).

(7) SAE J2951, Drive Quality Evaluation for Chassis Dynamometer Testing, revised January 2014, IBR approved for § 1066.425(j).

(c) National Institute of Standards and Technology material. The following documents are available from National Institute of Standards and Technology, 100 Bureau Drive, Stop 1070, Gaithersburg, MD 20899–1070, (301) 975–6478, or *www.nist.gov:*

(1) NIST Special Publication 811, 2008 Edition, Guide for the Use of the International System of Units (SI), Physics Laboratory, March 2008, IBR approved for §§1066.20(a) and 1066.1005.

(2) [Reserved]

[79 FR 23823, Apr. 28, 2014, as amended at 80 FR 9124, Feb. 19, 2015; 81 FR 74217, Oct. 25, 2016]

PART 1068—GENERAL COMPLIANCE PROVISIONS FOR HIGHWAY, STATIONARY, AND NONROAD PROGRAMS

Subpart A—Applicability and Miscellaneous Provisions

Sec.
1068.1 Does this part apply to me?
1068.2 How does this part apply for engines and how does it apply for equipment?
1068.5 How must manufacturers apply good engineering judgment?
1068.10 Confidential information.
1068.15 General provisions for EPA decision-making.
1068.20 May EPA enter my facilities for inspections?
1068.25 What information must I give to EPA?
§1068.27 May EPA conduct testing with my engines/equipment?
1068.30 What definitions apply to this part?
1068.31 Changing the status of nonroad or stationary engines under the definition of ''nonroad engine''.
1068.32 Explanatory terms.
1068.35 Symbols, acronyms, and abbreviations.
1068.40 Special provisions for implementing changes in the regulations in this part.
1068.45 General labeling provisions.
1068.95 What materials does this part reference?

Subpart B—Prohibited Actions and Related Requirements

1068.101 What general actions does this regulation prohibit?
1068.103 Provisions related to the duration and applicability of certificates of conformity.
1068.105 What other provisions apply to me specifically if I manufacture equipment needing certified engines?
1068.110 Other provisions for engines/equipment in service.
1068.115 What are manufacturers' emission-related warranty requirements?
1068.120 Requirements for rebuilding engines.
1068.125 What happens if I violate the regulations?

Subpart C—Exemptions and Exclusions

1068.201 General exemption and exclusion provisions.
1068.210 Exempting text engines/equipment.
1068.215 Exempting manufacturer-owned engines/equipment.
1068.220 Exempting display engines/equipment.
1068.225 Exempting engines/equipment for national security.
1068.230 Exempting engines/equipment for export.
1068.235 Exempting nonroad engines/equipment used solely for competition.
1068.240 Exempting new replacement engines.
1068.245 Temporary provisions addressing hardship due to unusual circumstances.
1068.250 Extending compliance deadlines for small businesses under hardship.
1068.255 Exempting engines and fuel-system components for hardship for equipment manufacturers and secondary engine manufacturers.
1068.260 General provisions for selling or shipping engines that are not yet in their certified configuration.
1068.261 Delegated assembly and other provisions related to engines not yet in the certified configuration.
1068.262 Shipment of engines to secondary engine manufacturers.
1068.265 Provisions for engines/equipment conditionally exempted from certification.

Subpart D—Imports

1068.301 General provisions for importing engines/equipment.
1068.305 How do I get an exemption or exclusion for imported engines/equipment?
1068.310 Exclusions for imported engines/equipment.
1068.315 Permanent exemptions for imported engines/equipment.
1068.325 Temporary exemptions for imported engines/equipment.
1068.335 Penalties for violations.
1068.360 Restrictions for assigning a model year to imported engines and equipment.

Subpart E—Selective Enforcement Auditing

1068.401 What is a selective enforcement audit?
1068.405 What is in a test order?
1068.410 How must I select and prepare my engines/equipment?
1068.415 How do I test my engines/equipment?
1068.420 How do I know when my engine family fails an SEA?

1068.425 What happens if one of my production-line engines/equipment exceeds the emission standards?
1068.430 What happens if a family fails an SEA?
1068.435 May I sell engines/equipment from a family with a suspended certificate of conformity?
1068.440 How do I ask EPA to reinstate my suspended certificate?
1068.445 When may EPA revoke my certificate under this subpart and how may I sell these engines/equipment again?
1068.450 What records must I send to EPA?
1068.455 What records must I keep?
APPENDIX A TO SUBPART E OF PART 1068—PLANS FOR SELECTIVE ENFORCEMENT AUDITING

Subpart F—Reporting Defects and Recalling Engines/Equipment

1068.501 How do I report emission-related defects?
1068.505 How does the recall program work?
1068.510 How do I prepare and apply my remedial plan?
1068.515 How do I mark or label repaired engines/equipment?
1068.520 How do I notify affected owners?
1068.525 What records must I send to EPA?
1068.530 What records must I keep?
1068.535 How can I do a voluntary recall for emission-related problems?

Subpart G—Hearings

1068.601 Overview.
1068.610 Request for hearing—suspending, revoking, or voiding a certificate of conformity.
1068.615 Request for hearing—denied application for certification, automatically suspended certificate, and determinations related to certification.
1068.620 Request for hearing—recall.
1068.625 Request for hearing—nonconformance penalties.
1068.650 Procedures for informal hearings.
APPENDIX I TO PART 1068—EMISSION-RELATED COMPONENTS
APPENDIX II TO PART 1068—EMISSION-RELATED PARAMETERS AND SPECIFICATIONS
APPENDIX III TO PART 1068—HIGH-ALTITUDE COUNTIES

AUTHORITY: 42 U.S.C. 7401–7671q.

SOURCE: 73 FR 59344, Oct. 8, 2008, unless otherwise noted.

Subpart A—Applicability and Miscellaneous Provisions

§ 1068.1 Does this part apply to me?

(a) The provisions of this part apply to everyone with respect to the engine and equipment categories as described in this paragraph (a). They apply to everyone, including owners, operators, parts manufacturers, and persons performing maintenance. Where we identify an engine category, the provisions of this part also apply with respect to the equipment using such engines. This part 1068 applies to different engine and equipment categories as follows:

(1) This part 1068 applies to motor vehicles we regulate under 40 CFR part 86, subpart S, to the extent and in the manner specified in 40 CFR parts 85 and 86.

(2) This part 1068 applies for heavy-duty motor vehicles we regulate under 40 CFR part 1037, subject to the provisions of 40 CFR parts 85 and 1037. This includes trailers. This part 1068 applies to other heavy-duty motor vehicles and motor vehicle engines to the extent and in the manner specified in 40 CFR parts 85, 86, and 1036.

(3) This part 1068 applies to highway motorcycles we regulate under 40 CFR part 86, subparts E and F, to the extent and in the manner specified in 40 CFR parts 85 and 86.

(4) This part 1068 applies to aircraft we regulate under 40 CFR part 87 to the extent and in the manner specified in 40 CFR part 87.

(5) This part 1068 applies for locomotives that are subject to the provisions of 40 CFR part 1033. This part 1068 does not apply for locomotives or locomotive engines that were originally manufactured before July 7, 2008, and that have not been remanufactured on or after July 7, 2008.

(6) This part 1068 applies for land-based nonroad compression-ignition engines that are subject to the provisions of 40 CFR part 1039. This part 1068 does not apply for engines certified under 40 CFR part 89.

(7) This part 1068 applies for stationary compression-ignition engines certified using the provisions of 40 CFR parts 89, 94, 1039, and 1042 as described in 40 CFR part 60, subpart IIII.

(8) This part 1068 applies for marine compression-ignition engines that are subject to the provisions of 40 CFR part 1042. This part 1068 does not apply for marine compression-ignition engines certified under 40 CFR part 94.

(9) This part 1068 applies for marine spark-ignition engines that are subject to the provisions of 40 CFR part 1045. This part 1068 does not apply for marine spark-ignition engines certified under 40 CFR part 91.

(10) This part 1068 applies for large nonroad spark-ignition engines that are subject to the provisions of 40 CFR part 1048.

(11) This part 1068 applies for stationary spark-ignition engines certified using the provisions of 40 CFR part 1048 or part 1054, as described in 40 CFR part 60, subpart JJJJ.

(12) This part 1068 applies for recreational engines and vehicles, including snowmobiles, off-highway motorcycles, and all-terrain vehicles that are subject to the provisions of 40 CFR part 1051.

(13) This part applies for small nonroad spark-ignition engines that are subject to the provisions of 40 CFR part 1054. This part 1068 does not apply for nonroad spark-ignition engines certified under 40 CFR part 90.

(14) This part applies for fuel-system components installed in nonroad equipment powered by volatile liquid fuels that are subject to the provisions of 40 CFR part 1060.

(b) [Reserved]

(c) Paragraph (a) of this section identifies the parts of the CFR that define emission standards and other requirements for particular types of engines and equipment. This part 1068 refers to each of these other parts generically as the ''standard-setting part.'' For example, 40 CFR part 1051 is always the standard-setting part for snowmobiles. Follow the provisions of the standard-setting part if they are different than any of the provisions in this part.

(d) Specific provisions in this part 1068 start to apply separate from the schedule for certifying engines/equipment to new emission standards, as follows:

(1) The provisions of §§1068.30 and 1068.310 apply for stationary spark-ignition engines built on or after January 1, 2004, and for stationary compression-ignition engines built on or after January 1, 2006.

(2) The provisions of §§1068.30 and 1068.235 apply for the types of nonroad engines/equipment listed in paragraph (a) of this section beginning January 1, 2004, if they are used solely for competition.

(3) The standard-setting part may specify how the provisions of this part 1068 apply for uncertified engines/equipment.

[81 FR 74217, Oct. 25, 2016]

EFFECTIVE DATE NOTE: At 86 FR 34588, June 29, 2021, §1068.1 was amended, effective July 29, 2021.

§1068.2 How does this part apply for engines and how does it apply for equipment?

(a) See the standard-setting part to determine if engine-based and/or equipment-based standards apply. (Note: Some equipment is subject to engine-based standards for exhaust emission and equipment-based standards for evaporative emissions.)

(b) The provisions of this part apply differently depending on whether the engine or equipment is required to be certified.

(1) Subpart A and subpart B of this part apply to engines and equipment, without regard to which is subject to certification requirements in the standard-setting part.

(2) Subparts C, D, and E of this part apply to the engines or to the equipment, whichever is subject to certification requirements in the standard-setting part.

(3) Subpart F of this part generally applies to the engines or to the equipment, whichever is subject to standards under the standard-setting part. However, since subpart F of this part addresses in-use engines and equipment (in which the engine is installed in the equipment), the requirements do not always distinguish between engines and equipment.

(c) For issues related to testing, read the term ''engines/equipment'' to mean engines for engines subject to engine-based testing and equipment for equipment subject to equipment-based testing; otherwise, read the term ''engines/equipment'' to mean engines for

sources subject to engine-based standards and equipment for sources subject to equipment-based standards.

(d) When we use the term engines (rather than engines/equipment), read it to mean engines without regard to whether the source is subject to engine-based standards or testing. When we use the term equipment (rather than engines/equipment), read it to mean equipment without regard to whether the source is subject to equipment-based standards or testing. (Note: The definition of ''equipment'' in § 1068.30 includes the engine.)

(e) The terminology convention described in this section is not intended to limit our authority or your obligations under the Clean Air Act.

§ 1068.5 How must manufacturers apply good engineering judgment?

(a) You must use good engineering judgment for decisions related to any requirements under this chapter. This includes your applications for certification, any testing you do to show that your certification, production-line, and in-use engines/equipment comply with requirements that apply to them, and how you select, categorize, determine, and apply these requirements.

(b) If we send you a written request, you must give us a written description of the engineering judgment in question. Respond within 15 working days of receiving our request unless we allow more time.

(c) We may reject your decision if it is not based on good engineering judgment or is otherwise inconsistent with the requirements that apply, based on the following provisions:

(1) We may suspend, revoke, or void a certificate of conformity if we determine you deliberately used incorrect information or overlooked important information, that you did not decide in good faith, or that your decision was not rational.

(2) If we believe a different decision would better reflect good engineering judgment, but none of the provisions of paragraph (c)(1) of this section apply, we will tell you of our concern (and its basis). You will have 30 days to respond to our concerns, or more time if we agree that you need it to generate more information. After considering your information, we will give you a final ruling. If we conclude that you did not use good engineering judgment, we may reject your decision and apply the new ruling to similar situations as soon as possible.

(d) We will tell you in writing of the conclusions we reach under paragraph (c) of this section and explain our reasons for them.

(e) If you disagree with our conclusions, you may file a request for a hearing with the Designated Compliance Officer as described in subpart G of this part. In your request, specify your objections, include data or supporting analysis, and get your authorized representative's signature. If we agree that your request raises a substantial factual issue, we will hold the hearing according to subpart F of this part.

§ 1068.10 Confidential information.

(a) Clearly show what you consider confidential by marking, circling, bracketing, stamping, or some other method.

(b) We will store your confidential information as described in 40 CFR part 2. Also, we will disclose it only as specified in 40 CFR part 2. This applies both to any information you send us and to any information we collect from inspections, audits, or other site visits.

(c) If you send us a second copy without the confidential information, we will assume it contains nothing confidential whenever we need to release information from it.

(d) If you send us information without claiming it is confidential, we may make it available to the public without further notice to you, as described in 40 CFR 2.204.

EFFECTIVE DATE NOTE: At 86 FR 34589, June 29, 2021, § 1068.10 was amended, effective July 29, 2021.

§ 1068.15 General provisions for EPA decision-making.

(a) Not all EPA employees may represent the Agency with respect to EPA decisions under this part or the standard-setting part. Only the Administrator of the Environmental Protection Agency or an official to whom the Administrator has delegated specific authority may represent the Agency. For

more information, ask for a copy of the relevant sections of the EPA Delegations Manual from the Designated Compliance Officer.

(b) The regulations in this part and in the standard-setting part have specific requirements describing how to get EPA approval before you take specific actions. These regulations also allow us to waive some specific requirements. For provisions or flexibilities that we address frequently, we may choose to provide detailed guidance in supplemental compliance instructions for manufacturers. Such instructions will generally state how they relate to the need for pre-approval. Unless we explicitly state so, you should not consider full compliance with the instructions to be equivalent to EPA approval.

[73 FR 59344, Oct. 8, 2008, as amended at 81 FR 74217, Oct. 25, 2016]

§ 1068.20 May EPA enter my facilities for inspections?

(a) We may inspect your testing, manufacturing processes, storage facilities (including port facilities for imported engines and equipment or other relevant facilities), or records, as authorized by the Clean Air Act, to enforce the provisions of this chapter. Inspectors will have authorizing credentials and will limit inspections to reasonable times—usually, normal operating hours.

(b) We may select any facility to do any of the following:

(1) Inspect and monitor any aspect of engine or equipment manufacturing, assembly, storage, or other procedures, and any facilities where you do them.

(2) Inspect and monitor any aspect of engine or equipment test procedures or test-related activities, including test engine/equipment selection, preparation, service accumulation, emission duty cycles, and maintenance and verification of your test equipment's calibration.

(3) Inspect and copy records or documents related to assembling, storing, selecting, and testing an engine or piece of equipment.

(4) Inspect and photograph any part or aspect of engines or equipment and components you use for assembly.

(c) You must give us reasonable help without charge during an inspection authorized by the Clean Air Act. For example, you may need to help us arrange an inspection with the facility's managers, including clerical support, copying, and translation. You may also need to show us how the facility operates and answer other questions. If we ask in writing to see a particular employee at the inspection, you must ensure that he or she is present (legal counsel may accompany the employee).

(d) If you have facilities in other countries, we expect you to locate them in places where local law does not keep us from inspecting as described in this section. We will not try to inspect if we learn that local law prohibits it, but we may suspend your certificate if we are not allowed to inspect.

[73 FR 59344, Oct. 8, 2008, as amended at 81 FR 74217, Oct. 25, 2016]

§ 1068.25 What information must I give to EPA?

If you are subject to the requirements of this part, we may require you to give us information to evaluate your compliance with any regulations that apply, as authorized by the Clean Air Act. This includes the following things:

(a) You must provide the information we require in this chapter. We may require an authorized representative of your company to approve and sign any submission of information to us, and to certify that the information is accurate and complete.

(b) You must establish and maintain records, perform tests, make reports and provide additional information that we may reasonably require under section 208 of the Clean Air Act (42 U.S.C. 7542). This also applies to engines/equipment we exempt from emission standards or prohibited acts. Unless we specify otherwise, you must keep required records for eight years.

(c) You are responsible for statements and information in your applications for certification or any other requests or reports. If you provide statements or information to someone for submission to EPA, you are responsible for these statements and information as if you had submitted them to EPA yourself. For example, knowingly submitting false information to someone

else for inclusion in an application for certification would be deemed to be a submission of false information to the U.S. government in violation of 18 U.S.C. 1001.

[73 FR 59344, Oct. 8, 2008, as amended at 75 FR 23058, Apr. 30, 2010]

§ 1068.27 May EPA conduct testing with my engines/equipment?

(a) As described in the standard-setting part, we may perform testing on your engines/equipment before we issue a certificate of conformity. This is generally known as confirmatory testing.

(b) If we request it, you must make a reasonable number of production-line engines or pieces of production-line equipment available for a reasonable time so we can test or inspect them for compliance with the requirements of this chapter.

(c) If your emission-data engine/equipment or production engine/equipment requires special components for proper testing, you must promptly provide any such components to us if we ask for them.

[81 FR 74217, Oct. 25, 2016]

§ 1068.30 Definitions.

The following definitions apply to this part. The definitions apply to all subparts unless we note otherwise. All undefined terms have the meaning the Clean Air Act gives to them. The definitions follow:

Affiliated companies or *affiliates* means one of the following:

(1) For determinations related to small manufacturer allowances or other small business provisions, these terms mean all entities considered to be affiliates with your entity under the Small Business Administration's regulations in 13 CFR 121.103.

(2) For all other provisions, these terms mean all of the following:

(i) Parent companies (as defined in this section).

(ii) Subsidiaries (as defined in this section).

(iii) Subsidiaries of your parent company.

Aftertreatment means relating to a catalytic converter, particulate filter, or any other system, component, or technology mounted downstream of the exhaust valve (or exhaust port) whose design function is to reduce emissions in the engine exhaust before it is exhausted to the environment. Exhaust gas recirculation (EGR) is not aftertreatment.

Aircraft means any vehicle capable of sustained air travel more than 100 feet above the ground.

Certificate holder means a manufacturer (including importers) with a valid certificate of conformity for at least one family in a given model year, or the preceding model year. Note that only manufacturers may hold certificates. Your applying for or accepting a certificate is deemed to be your agreement that you are a manufacturer.

Clean Air Act means the Clean Air Act, as amended, 42 U.S.C. 7401– 7671q.

Date of manufacture means one of the following:

(1) For engines, the date on which the crankshaft is installed in an engine block, with the following exceptions:

(i) For engines produced by secondary engine manufacturers under § 1068.262, date of manufacture means the date the engine is received from the original engine manufacturer. You may assign an earlier date up to 30 days before you received the engine, but not before the crankshaft was installed. You may not assign an earlier date if you cannot demonstrate the date the crankshaft was installed.

(ii) Manufacturers may assign a date of manufacture at a point in the assembly process later than the date otherwise specified under this definition. For example, a manufacturer may use the build date printed on the label or stamped on the engine as the date of manufacture.

(2) For equipment, the date on which the engine is installed, unless otherwise specified in the standard-setting part. Manufacturers may alternatively assign a date of manufacture later in the assembly process.

Days means calendar days, including weekends and holidays.

Defeat device has the meaning given in the standard-setting part.

Designated Compliance Officer means one of the following:

(1) For motor vehicles regulated under 40 CFR part 86, subpart S: Director, Light-Duty Vehicle Center, U.S.

Environmental Protection Agency, 2000 Traverwood Drive, Ann Arbor, MI 48105; *complianceinfo@epa.gov*; *epa.gov/otaq/verify*.

(2) For compression-ignition engines used in heavy-duty highway vehicles regulated under 40 CFR part 86, subpart A, and 40 CFR parts 1036 and 1037, and for nonroad and stationary compression-ignition engines or equipment regulated under 40 CFR parts 60, 1033, 1039, and 1042: Director, Diesel Engine Compliance Center, U.S. Environmental Protection Agency, 2000 Traverwood Drive, Ann Arbor, MI 48105; *complianceinfo@epa.gov; epa.gov/otaq/verify*.

(3) Director, Gasoline Engine Compliance Center, U.S. Environmental Protection Agency, 2000 Traverwood Drive, Ann Arbor, MI 48105; *nonroad-sicert@epa.gov*; *epa.gov/otaq/verify*, for all the following engines and vehicles:

(i) For spark-ignition engines used in heavy-duty highway vehicles regulated under 40 CFR part 86, subpart A, and 40 CFR parts 1036 and 1037,

(ii) For highway motorcycles regulated under 40 CFR part 86, subpart E.

(iii) For nonroad and stationary spark-ignition engines or equipment regulated under 40 CFR parts 60, 1045, 1048, 1051, 1054, and 1060.

Engine means an engine block with an installed crankshaft, or a gas turbine engine. The term engine does not include engine blocks without an installed crankshaft, nor does it include any assembly of reciprocating engine components that does not include the engine block. (NOTE: For purposes of this definition, any component that is the primary means of converting an engine's energy into usable work is considered a crankshaft, whether or not it is known commercially as a crankshaft.) This includes complete and partially complete engines as follows:

(1) A complete engine is a fully assembled engine in its final configuration. In the case of equipment-based standards, an engine is not considered complete until it is installed in the equipment, even if the engine itself is fully assembled.

(2) A partially complete engine is an engine that is not fully assembled or is not in its final configuration. Except where we specify otherwise in this part or the standard-setting part, partially complete engines are subject to the same standards and requirements as complete engines. The following would be considered examples of partially complete engines:

(i) An engine that is missing certain emission-related components.

(ii) A new engine that was originally assembled as a motor-vehicle engine that will be recalibrated for use as a nonroad engine.

(iii) A new engine that was originally assembled as a land-based engine that will be modified for use as a marine propulsion engine.

(iv) A short block consisting of a crankshaft and other engine components connected to the engine block, but missing the head assembly.

(v) A long block consisting of all engine components except the fuel system and an intake manifold.

(vi) In the case of equipment-based standards, a fully functioning engine that is not yet installed in the equipment. For example, a fully functioning engine that will be installed in an off-highway motorcycle or a locomotive is considered partially complete until it is installed in the equipment.

Engine-based standard means an emission standard expressed in units of grams of pollutant per kilowatt-hour (or grams of pollutant per horsepower-hour) that applies to the engine. Emission standards are either engine-based or equipment-based. Note that engines may be subject to additional standards such as smoke standards.

Engine-based test means an emission test intended to measure emissions in units of grams of pollutant per kilowatt-hour (or grams of pollutant per horsepower-hour), without regard to whether the standard applies to the engine or equipment. Note that some products that are subject to engine-based testing are subject to additional test requirements such as for smoke.

Engine configuration means a unique combination of engine hardware and calibration within an engine family. Engines within a single engine configuration differ only with respect to normal production variability or factors unrelated to emissions.

Engine/equipment and *engines/equipment* mean engine(s) and/or equipment

depending on the context. Specifically these terms mean the following:

(1) Engine(s) when only engine-based standards apply.

(2) Engine(s) for testing issues when engine-based testing applies.

(3) Engine(s) and equipment when both engine-based and equipment-based standards apply.

(4) Equipment when only equipment-based standards apply.

(5) Equipment for testing issues when equipment-based testing applies.

Equipment means one of the following things:

(1) Any vehicle, vessel, or other type of equipment that is subject to the requirements of this part or that uses an engine that is subject to the requirements of this part. An installed engine is part of the equipment. Motor vehicle trailers are a type of equipment that is subject to the requirements of this part.

(2) Fuel-system components that are subject to an equipment-based standard under this chapter. Installed fuel-system components are also considered part of the engine/equipment to which they are attached.

Equipment-based standard means an emission standard that applies to the equipment in which an engine is used or to fuel-system components associated with an engine, without regard to how the emissions are measured. If equipment-based standards apply, we require that the equipment or fuel-system components be certified rather than just the engine. Emission standards are either engine-based or equipment-based. For example, recreational vehicles we regulate under 40 CFR part 1051 are subject to equipment-based standards even if emission measurements are based on engine operation alone.

Excluded means relating to engines/equipment that are not subject to emission standards or other requirements because they do not meet the definitions or other regulatory provisions that define applicability. For example, a non-stationary engine that is used solely for off-highway competition is excluded from the requirements of this part because it meets neither the definition of ''motor vehicle engine'' nor ''nonroad engine'' under section 216 of the Clean Air Act.

Exempted means relating to engines/equipment that are subject to certain standards or other requirements, but are not required to meet those standards or requirements, subject to one or more qualifying conditions. Exempted engines/equipment must conform to regulatory conditions specified for an exemption in this part 1068 or in the standard-setting part. Engines/equipment exempted with respect to a certain tier of standards may be required to comply with an earlier tier of standards as a condition of the exemption; for example, engines exempted with respect to Tier 3 standards may be required to comply with Tier 1 or Tier 2 standards.

Family means engine family or emission family, as applicable, under the standard-setting part.

Final deteriorated test result has the meaning given in the standard-setting part. If it is not defined in the standard-setting part, it means the emission level that results from applying all appropriate adjustments (such as deterioration factors) to the measured emission result of the emission-data engine.

Gas turbine engine means anything commercially known as a gas turbine engine or any collection of assembled engine components that is substantially similar to engines commercially known as gas turbine engines. For example, a jet engine is a gas turbine engine. Gas turbine engines may be complete or partially complete. Turbines that rely on external combustion such as steam engines are not gas turbine engines.

Good engineering judgment means judgments made consistent with generally accepted scientific and engineering principles and all available relevant information. See § 1068.5.

Manufacturer has the meaning given in section 216(1) of the Clean Air Act (42 U.S.C. 7550(1)). In general, this term includes any person who manufactures or assembles an engine or piece of equipment for sale in the United States or otherwise introduces a new engine or piece of equipment into U.S. commerce. This includes importers that import new engines or new equipment into the United States for resale. It

also includes secondary engine manufacturers.

Model year has the meaning given in the standard-setting part. Unless the standard-setting part specifies otherwise, model year for individual engines/equipment is based on the date of manufacture or a later stage in the assembly process determined by the manufacturer, subject to the limitations described in §§1068.103 and 1068.360. The model year of a new engine that is neither certified nor exempt is deemed to be the calendar year in which it is sold, offered for sale, imported, or delivered or otherwise introduced into U.S. commerce.

Motor vehicle has the meaning given in 40 CFR 85.1703.

New has the meaning we give it in the standard-setting part. Note that in certain cases, used and remanufactured engines/equipment may be ''new'' engines/equipment.

Nonroad engine means:

(1) Except as discussed in paragraph (2) of this definition, a nonroad engine is an internal combustion engine that meets any of the following criteria:

(i) It is (or will be) used in or on a piece of equipment that is self-propelled or serves a dual purpose by both propelling itself and performing another function (such as garden tractors, off-highway mobile cranes and bulldozers).

(ii) It is (or will be) used in or on a piece of equipment that is intended to be propelled while performing its function (such as lawnmowers and string trimmers).

(iii) By itself or in or on a piece of equipment, it is portable or transportable, meaning designed to be and capable of being carried or moved from one location to another. Indicia of transportability include, but are not limited to, wheels, skids, carrying handles, dolly, trailer, or platform.

(2) An internal combustion engine is not a nonroad engine if it meets any of the following criteria:

(i) The engine is used to propel a motor vehicle, an aircraft, or equipment used solely for competition.

(ii) The engine is regulated under 40 CFR part 60, (or otherwise regulated by a federal New Source Performance Standard promulgated under section 111 of the Clean Air Act (42 U.S.C. 7411)). Note that this criterion does not apply for engines meeting any of the criteria of paragraph (1) of this definition that are voluntarily certified under 40 CFR part 60.

(iii) The engine otherwise included in paragraph (1)(iii) of this definition remains or will remain at a location for more than 12 consecutive months or a shorter period of time for an engine located at a seasonal source. A location is any single site at a building, structure, facility, or installation. For any engine (or engines) that replaces an engine at a location and that is intended to perform the same or similar function as the engine replaced, include the time period of both engines in calculating the consecutive time period. An engine located at a seasonal source is an engine that remains at a seasonal source during the full annual operating period of the seasonal source. A seasonal source is a stationary source that remains in a single location on a permanent basis (*i.e.*, at least two years) and that operates at that single location approximately three months (or more) each year. See §1068.31 for provisions that apply if the engine is removed from the location.

Operating hours means:

(1) For engine and equipment storage areas or facilities, times during which people other than custodians and security personnel are at work near, and can access, a storage area or facility.

(2) For other areas or facilities, times during which an assembly line operates or any of the following activities occurs:

(i) Testing, maintenance, or service accumulation.

(ii) Production or compilation of records.

(iii) Certification testing.

(iv) Translation of designs from the test stage to the production stage.

(v) Engine or equipment manufacture or assembly.

Parent company means any entity that has a controlling ownership of another company. Note that the standard-setting part may treat a partial owner as a parent company even if it does not have controlling ownership of a company.

Piece of equipment means any vehicle, vessel, locomotive, aircraft, or other type of equipment equipped with engines to which this part applies.

Placed into service means used for its intended purpose. Engines/equipment do not qualify as being ''placed into service'' based on incidental use by a manufacturer or dealer.

Reasonable technical basis means information that would lead a person familiar with engine design and function to reasonably believe a conclusion related to compliance with the requirements of this part. For example, it would be reasonable to believe that parts performing the same function as the original parts (and to the same degree) would control emissions to the same degree as the original parts. Note that what is a reasonable basis for a person without technical training might not qualify as a reasonable technical basis.

Relating to as used in this section means relating to something in a specific, direct manner. This expression is used in this section only to define terms as adjectives and not to broaden the meaning of the terms. Note that ''relating to'' is used in the same manner as in the standard-setting parts.

Replacement engine means an engine exempted as a replacement engine under § 1068.240.

Revoke means to terminate the certificate or an exemption for a family. If we revoke a certificate or exemption, you must apply for a new certificate or exemption before continuing to introduce the affected engines/equipment into U.S. commerce. This does not apply to engines/equipment you no longer possess.

Secondary engine manufacturer means anyone who produces a new engine by modifying a complete or partially complete engine that was made by a different company. For the purpose of this definition, ''modifying'' does not include making changes that do not remove an engine from its original certified configuration. Secondary engine manufacturing includes, for example, converting automotive engines for use in industrial applications, or land-based engines for use in marine applications. This applies whether it involves a complete or partially complete engine and whether the engine was previously certified to emission standards or not.

(1) Manufacturers controlled by the manufacturer of the base engine (or by an entity that also controls the manufacturer of the base engine) are not secondary engine manufacturers; rather, both entities are considered to be one manufacturer for purposes of this part.

(2) This definition applies equally to equipment manufacturers that modify engines. Also, equipment manufacturers that certify to equipment-based standards using engines produced by another company are deemed to be secondary engine manufacturers.

(3) Except as specified in paragraph (2) of this definition, companies importing complete engines into the United States are not secondary engine manufacturers regardless of the procedures and relationships between companies for assembling the engines.

Small business means either of the following:

(1) A company that qualifies under the standard-setting part for special provisions for small businesses or small-volume manufacturers.

(2) A company that qualifies as a small business under the regulations adopted by the Small Business Administration at 13 CFR 121.201 if the standard-setting part does not establish such qualifying criteria.

Standard-setting part means a part in the Code of Federal Regulations that defines emission standards for a particular engine and/or piece of equipment (see § 1068.1(a)). For example, the standard-setting part for marine spark-ignition engines is 40 CFR part 1045. For provisions related to evaporative emissions, the standard-setting part may be 40 CFR part 1060, as specified in 40 CFR 1060.1.

Subsidiary means an entity that is owned or controlled by a parent company.

Sulfur-sensitive technology means an emission control technology that experiences a significant drop in emission control performance or emission-system durability when an engine is operated on low-sulfur diesel fuel (*i.e.*, fuel with a sulfur concentration of 300 to 500 ppm) as compared to when it is operated on ultra low-sulfur diesel fuel (*i.e.*,

fuel with a sulfur concentration less than 15 ppm). Exhaust gas recirculation is not a sulfur-sensitive technology.

Suspend means to temporarily discontinue the certificate or an exemption for a family. If we suspend a certificate, you may not sell, offer for sale, or introduce or deliver into commerce in the United States or import into the United States engines/equipment from that family unless we reinstate the certificate or approve a new one. This also applies if we suspend an exemption, unless we reinstate the exemption.

Ultimate purchaser means the first person who in good faith purchases a new engine or new piece of equipment for purposes other than resale.

United States, in a geographic sense, means the States, the District of Columbia, the Commonwealth of Puerto Rico, the Commonwealth of the Northern Mariana Islands, Guam, American Samoa, and the U.S. Virgin Islands.

U.S.-directed production volume has the meaning given in the standard-setting part.

Void means to invalidate a certificate or an exemption *ab initio* (''from the beginning''). If we void a certificate, all the engines/equipment introduced into U.S. commerce under that family for that model year are considered uncertified (or nonconforming) and are therefore not covered by a certificate of conformity, and you are liable for all engines/equipment introduced into U.S. commerce under the certificate and may face civil or criminal penalties or both. This applies equally to all engines/equipment in the family, including engines/equipment introduced into U.S. commerce before we voided the certificate. If we void an exemption, all the engines/equipment introduced into U.S. commerce under that exemption are considered uncertified (or nonconforming), and you are liable for engines/equipment introduced into U.S. commerce under the exemption and may face civil or criminal penalties or both. You may not sell, offer for sale, or introduce or deliver into commerce in the United States or import into the United States any additional engines/equipment using the voided exemption.

Voluntary emission recall means a repair, adjustment, or modification program voluntarily initiated and conducted by a manufacturer to remedy any emission-related defect for which engine owners have been notified.

We (us, our) means the Administrator of the Environmental Protection Agency and any authorized representatives.

[81 FR 74218, Oct. 25, 2016]

§ 1068.31 Changing the status of nonroad or stationary engines under the definition of "nonroad engine".

This section specifies the provisions that apply when an engine previously used in a nonroad application is subsequently used in an application other than a nonroad application, or when an engine previously used in a stationary application (*i.e.*, an engine that was not used as a nonroad engine and that was not used to propel a motor vehicle, an aircraft, or equipment used solely for competition) is moved.

(a) Changing the status of a stationary engine to be a new nonroad engine as described in paragraph (b) of this section is a violation of § 1068.101(a)(1) or (b)(3) unless the engine has been certified to be compliant with all requirements of this chapter that apply to new nonroad engines of the same type (for example, a compression-ignition engine rated at 40 kW) and model year, and is in its certified configuration. Note that the definitions of ''model year'' in the standard-setting parts generally identify the engine's original date of manufacture as the basis for determining which standards apply if it becomes a nonroad engine after it is no longer new. For example, see 40 CFR 1039.801 and 1048.801.

(b) A stationary engine becomes a new nonroad engine if—

(1) It is used in an application that meets the criteria specified in paragraphs (1)(i) or (ii) in the definition of ''nonroad engine'' in § 1068.30.

(2) It meets the criteria specified in paragraph (1)(iii) of the definition of ''nonroad engine'' in § 1068.30 and is moved so that it fails to meet (or no longer meets) the criteria specified in paragraph (2)(iii) in the definition of ''nonroad engine'' in § 1068.30.

(c) A stationary engine does not become a new nonroad engine if it is moved but continues to meet the criteria specified in paragraph (2)(iii) in the definition of ''nonroad engine'' in § 1068.30 in its new location. For example, a transportable engine that is used in a single specific location for 18 months and is later moved to a second specific location where it will remain for at least 12 months is considered to be a stationary engine in both locations. Note that for stationary engines that are neither portable nor transportable in actual use, the residence-time restrictions in the definition of ''nonroad engine'' generally do not apply.

(d) Changing the status of a nonroad engine to be a new stationary engine as described in paragraph (e) of this section is a violation of § 1068.101(a)(1) unless the engine complies with all the requirements of this chapter for new stationary engines of the same type (for example, a compression-ignition engine rated at 40 kW) and model year. For a new stationary engine that is required to be certified under 40 CFR part 60, the engine must have been certified to be compliant with all the requirements that apply to new stationary engines of the same type and model year, and must be in its certified configuration. Note that the definitions of ''model year'' in the standard-setting parts generally identify the engine's original date of manufacture as the basis for determining which standards apply if it becomes a stationary engine after it is no longer new. For example, *see* 40 CFR 60.4219 and 60.4248.

(e) A nonroad engine ceases to be a nonroad engine and becomes a new stationary engine if—

(1) At any time, it meets the criteria specified in paragraph (2)(iii) in the definition of ''nonroad engine'' in § 1068.30. For example, a portable generator engine ceases to be a nonroad engine if it is used or will be used in a single specific location for 12 months or longer. If we determine that an engine will be or has been used in a single specific location for 12 months or longer, it ceased to be a nonroad engine when it was placed in that location.

(2) It is otherwise regulated by a federal New Source Performance Standard promulgated under section 111 of the Clean Air Act (42 U.S.C. 7411).

(f) A nonroad engine ceases to be a nonroad engine if it is used to propel a motor vehicle, an aircraft, or equipment used solely for competition. See 40 CFR part 86 for requirements applicable to motor vehicles and motor vehicle engines. See 40 CFR part 87 for requirements applicable to aircraft and aircraft engines. See § 1068.235 for requirements applicable to equipment used solely for competition.

[73 FR 59344, Oct. 8, 2008, as amended at 75 FR 23059, Apr. 30, 2010; 81 FR 74221, Oct. 25, 2016]

§ 1068.32 Explanatory terms.

This section explains how certain phrases and terms are used in 40 CFR parts 1000 through 1099, especially those used to clarify and explain regulatory provisions.

(a) *Types of provisions.* The term ''provision'' includes all aspects of the regulations in this subchapter U. As described in this section, regulatory provisions include standards, requirements, prohibitions, and allowances, along with a variety of other types of provisions. In certain cases, we may use these terms to apply to some but not all of the provisions of a part or section. For example, we may apply the allowances of a section for certain engines, but not the requirements. We may also apply all provisions except the requirements and prohibitions.

(1) A standard is a requirement established by regulation that limits the emissions of air pollutants. Examples of standards include numerical emission standards (such as 0.01 g/kW-hr) and design standards (such as a closed crankcase standard). Compliance with or conformance to a standard is a specific type of requirement, and in some cases a standard may be discussed as a requirement. Thus, a statement about the requirements of a part or section also applies with respect to the standards of the part or section.

(2) The regulations in subchapter U of this chapter apply other requirements in addition to standards. For example, manufacturers are required to keep records and provide reports to EPA.

(3) While requirements state what someone must do, prohibitions state

what someone may not do. Prohibitions are often referred to as prohibited acts or prohibited actions. Most penalties apply for violations of prohibitions. A list of prohibitions may therefore include the failure to meet a requirement as a prohibited action.

(4) Allowances provide some form of relief from requirements. This may include provisions delaying implementation, establishing exemptions or test waivers, or creating alternative compliance options. Allowances may be conditional. For example, we may exempt you from certain requirements on the condition that you meet certain other requirements.

(5) The regulations in subchapter U of this chapter also include important provisions that are not standards, requirements, prohibitions, or allowances, such as definitions.

(6) Engines/equipment are generally considered ''*subject to*'' a specific provision if that provision applies, or if it does not apply because of an exemption authorized under the regulation. For example, locomotives are subject to the provisions of 40 CFR part 1033 even if they are exempted from the standards of part 1033.

(b) *Singular and plural.* Unless stated otherwise or unless it is clear from the regulatory context, provisions written in singular form include the plural form and provisions written in plural form include the singular form. For example, the statement ''The manufacturer must keep this report for three years'' is equivalent to ''The manufacturers must keep these reports for three years.''

(c) *Inclusive lists.* Lists in the regulations in subchapter U of this chapter prefaced by ''including'' or ''this includes'' are not exhaustive. The terms ''including'' and ''this includes'' should be read to mean ''including but not limited to'' and ''this includes but is not limited to''. For example, the phrase ''including small manufacturers'' does not exclude large manufacturers. However, prescriptive statements to ''include'' specific items (such as those related to recordkeeping and reporting requirements) may be exhaustive.

(d) *Notes.* Statements that begin with ''Note:'' or ''Note that'' are intended to clarify specific regulatory provisions stated elsewhere in the regulations in subchapter U of this chapter. By themselves, such statements are not intended to specify regulatory requirements. Such statements are typically used for regulatory text that, while legally sufficient to specify a requirement, may be misunderstood by some readers. For example, the regulations might note that a word is defined elsewhere in the regulations to have a specific meaning that may be either narrower or broader than some readers might assume.

(e) *Examples.* Examples provided in the regulations in subchapter U of this chapter are typically introduced by either ''for example'' or ''such as''. Specific examples given in the regulations do not necessarily represent the most common examples. The regulations may specify examples conditionally (that is, specifying that they are applicable only if certain criteria or conditions are met). Lists of examples cannot be presumed to be exhaustive lists.

(f) *Generally and typically.* Statements that begin with ''generally'', ''in general'', or ''typically'' should not be read to apply universally or absolutely. Rather they are intended to apply for the most common circumstances. ''Generally'' and ''typically'' statements may be identified as notes as described in paragraph (d) of this section.

(g) *Unusual circumstances.* The regulations in subchapter U of this chapter specify certain allowances that apply ''in unusual circumstances''. While it is difficult to precisely define what ''unusual circumstances'' means, this generally refers to specific circumstances that are both rare and unforeseeable. For example, a severe hurricane in the northeastern United States may be considered to be an unusual circumstance, while a less severe hurricane in the southeastern United States may not be. Where the regulations limit an allowance to unusual circumstances, manufacturers and others should not presume that such an allowance will be available to them. Provisions related to unusual circumstances may be described using the phrase ''normal circumstances'', which are those circumstances that are not unusual circumstances.

(h) *Exceptions and other specifications.* Regulatory provisions may be expressed as a general prohibition, requirement, or allowance that is modified by other regulatory text. Such provisions may include phrases such as ''unless specified otherwise'', ''except as specified'', or ''as specified in this section''. It is important that the exceptions and the more general statement be considered together. This regulatory construct is intended to allow the core requirement or allowance to be stated in simple, clear sentences, rather than more precise and comprehensive sentences that may be misread. For example, where an action is prohibited in most but not all circumstances, the provision may state that you may not take the action, ''except as specified in this section.'' The exceptions could then be stated in subsequent regulatory text.

[81 FR 74221, Oct. 25, 2016]

1068.35 Symbols, acronyms, and abbreviations.

The following symbols, acronyms, and abbreviations apply to this part:

$ U.S. dollars.
CFR Code of Federal Regulations.
disp engine displacement.
EPA Environmental Protection Agency.
kW kilowatt.
L/cyl liters per cylinder.
NARA National Archives and Records Administration.
NO_X Oxides of nitrogen.
SAE Society of Automotive Engineers.
SEA selective enforcement audit.
U.S. United States.
U.S.C. United States Code.

§ 1068.40 Special provisions for implementing changes in the regulations in this part.

(a) During the 12 months following the effective date of any change in the provisions of this part, you may ask to apply the previously applicable provisions. Note that the effective date is generally 30 or 60 days after publication in the FEDERAL REGISTER, as noted in the final rule. We will generally approve your request if you can demonstrate that it would be impractical to comply with the new requirements. We may consider the potential for adverse environmental impacts in our decision. Similarly, in unusual circumstances, you may ask for relief under this paragraph (a) from new requirements that apply under the standard-setting part.

(b) During the 60 days following the effective date of any change in the provisions of this part, you may use the previously applicable provisions without request if they meet either of the following criteria:

(1) The new provisions require you to redesign your engines/equipment, modify your engine/equipment labels, or change your production procedures.

(2) The new provisions change what you must include in an application for certification that you submit before the end of this 60-day period. You are not required to amend such applications to comply with the new provisions for that model year; however, this allowance does not apply for later model years, even if you certify an engine family using carryover emission data. This allowance does not affect your obligation to provide information that we request separate from an application for certification.

[75 FR 23059, Apr. 30, 2010, as amended at 81 FR 74222, Oct. 25, 2016]

§ 1068.45 General labeling provisions.

The provisions of this part and the standard-setting part include a variety of labeling requirements. The following general provisions apply:

(a) *Permanent labels.* Where we specify that you apply a permanent label, you must meet the following requirements unless the standard-setting part includes other specific label requirements:

(1) Attach the label so no one can remove it without destroying or defacing it.

(2) Make sure it is durable and readable for the engine/equipment's entire life.

(3) Secure it to a part of the engine/equipment needed for normal operation and not normally requiring replacement.

(4) Write it in English.

(5) Make the labels readily visible to the average person after all installation and assembly are complete.

(b) *Removable labels*. Where we specify that you apply a removable label, it must meet the following conditions:

(1) You must attach the label in a way that does not allow it to be separated from the engine/equipment without a deliberate effort. Note that for exemptions requiring removable labels, the exemption no longer applies once the label is separated from the engine/equipment.

(2) The label must be durable and readable throughout the period of its intended purpose. This period generally includes all distribution in U.S. commerce during which the exemption applies.

(3) Except as specified in paragraph (c) of this section, the label must be attached directly to the engine/equipment in a visible location. We consider a tag that meets the specified requirements to be an attached label.

(c) *Labels on packaging*. Unless we specify otherwise, where we require engine/equipment labels that may be removable, you may instead label the packaging if the engines/equipment are packaged together as described in this paragraph (c). For example, this may involve packaging engines together by attaching them to a rack, binding them together on a pallet, or enclosing them in a box. The provisions of this paragraph (c) also apply for engines/equipment boxed individually where you do not apply labels directly to the engines/equipment. The following provisions apply if you label the packaging instead of labeling engines/equipment individually:

(1) You may use the provisions of this paragraph (c) only if all the engines/equipment packaged together need the same label.

(2) You must place the label on the package in a readily visible location. This may require labeling the package in multiple locations.

(3) You must package the engines/equipment such that the labels will not be separated from the engines/equipment or otherwise become unreadable throughout the period that the label applies. For example, labels required for shipping engines to a secondary engine manufacturer under § 1068.262 must remain attached and readable until they reach the secondary engine manufacturer. Similarly, removable labels specified in § 1068.240 for replacement engines must remain attached and readable until they reach the point of final installation.

(4) You are in violation of § 1068.101(a)(1) if such engines/equipment are removed from the package or are otherwise separated from the label before reaching the point at which the label is no longer needed.

(d) *Temporary consumer labels*. Where we specify that you apply temporary consumer labels (including tags), each label must meet the following conditions:

(1) You must attach the label in a way that does not allow it to be separated from the engine/equipment without a deliberate effort.

(2) The label must be sufficiently durable to be readable until it reaches the ultimate purchaser.

(3) The label must be attached directly to the engine/equipment in a visible location.

(e) *Prohibitions against removing labels*. As specified in § 1068.101(b)(7), removing permanent labels is prohibited except for certain circumstances. Removing temporary or removable labels prematurely is also prohibited by § 1068.101(b)(7).

(f) *Identifying emission control systems*. If the standard-setting part specifies that you use standardized terms and abbreviations to identify emission control systems, use terms and abbreviations consistent with SAE J1930 (incorporated by reference in § 1068.95).

(g) *Date format*. If you use a coded approach to identify the engine/equipment's date of manufacture, describe or interpret the code in your application for certification.

(h) *Branding*. The following provisions apply if you identify the name and trademark of another company instead of your own on your emission control information label, as provided in the standard-setting part:

(1) You must have a contractual agreement with the other company that obligates that company to take the following steps:

(i) Meet the emission warranty requirements that apply under the standard-setting part. This may involve a

separate agreement involving reimbursement of warranty-related expenses.

(ii) Report all warranty-related information to the certificate holder.

(2) In your application for certification, identify the company whose trademark you will use.

(3) You remain responsible for meeting all the requirements of this chapter, including warranty and defect-reporting provisions.

[73 FR 59344, Oct. 8, 2008, as amended at 75 FR 23059, Apr. 30, 2010; 81 FR 74222, Oct. 25, 2016]

§ 1068.95 Incorporation by reference.

(a) Certain material is incorporated by reference into this part with the approval of the Director of the Federal Register under 5 U.S.C. 552(a) and 1 CFR part 51. To enforce any edition other than that specified in this section, the Environmental Protection Agency must publish a document in the FEDERAL REGISTER and the material must be available to the public. All approved materials are available for inspection at the Air and Radiation Docket and Information Center (Air Docket) in the EPA Docket Center (EPA/DC) at Rm. 3334, EPA West Bldg., 1301 Constitution Ave. NW., Washington, DC The EPA/DC Public Reading Room hours of operation are 8:30 a.m. to 4:30 p.m., Monday through Friday, excluding legal holidays. The telephone number of the EPA/DC Public Reading Room is (202) 566–1744, and the telephone number for the Air Docket is (202) 566–1742. These approved materials are also available for inspection at the National Archives and Records Administration (NARA). For information on the availability of this material at NARA, call (202) 741–6030 or go to *http://www.archives.gov/federal_register/code_of_federal_regulations/ibr_locations.html.\n*. In addition, these materials are available from the sources listed below.

(b) SAE International, 400 Commonwealth Dr., Warrendale, PA 15096–0001, (724) 776–4841, or *http://www.sae.org*:

(1) SAE J1930, Electrical/Electronic Systems Diagnostic Terms, Definitions, Abbreviations, and Acronyms, revised October 2008 (''SAE J1930''), IBR approved for § 1068.45(f).

(2) [Reserved]

[81 FR 74222, Oct. 25, 2016]

Subpart B—Prohibited Actions and Related Requirements

§ 1068.101 What general actions does this regulation prohibit?

This section specifies actions that are prohibited and the maximum civil penalties that we can assess for each violation in accordance with 42 U.S.C. 7522 and 7524. The maximum penalty values listed in paragraphs (a) and (b) of this section and in § 1068.125 apply as of August 1, 2016. As described in paragraph (h) of this section, these maximum penalty limits are different for earlier violations and they may be adjusted as set forth in 40 CFR part 19.

(a) The following prohibitions and requirements apply to manufacturers of new engines, manufacturers of equipment containing these engines, and manufacturers of new equipment, except as described in subparts C and D of this part:

(1) *Introduction into commerce.* You may not sell, offer for sale, or introduce or deliver into commerce in the United States or import into the United States any new engine/equipment after emission standards take effect for the engine/equipment, unless it is covered by a valid certificate of conformity for its model year and has the required label or tag. You also may not take any of the actions listed in the previous sentence with respect to any equipment containing an engine subject to this part's provisions unless the engine is covered by a valid certificate of conformity for its model year and has the required engine label or tag. We may assess a civil penalty up to $44,539 for each engine or piece of equipment in violation.

(i) For purposes of this paragraph (a)(1), a valid certificate of conformity is one that applies for the same model year as the model year of the equipment (except as allowed by § 1068.105(a)), covers the appropriate category or subcategory of engines/equipment (such as locomotive or sterndrive/inboard Marine SI or nonhandheld Small SI), and conforms

to all requirements specified for equipment in the standard-setting part. Engines/equipment are considered not covered by a certificate unless they are in a configuration described in the application for certification.

(ii) The prohibitions of this paragraph (a)(1) also apply for new engines you produce to replace an older engine in a piece of equipment, except that the engines may qualify for the replacement-engine exemption in § 1068.240.

(iii) The prohibitions of this paragraph (a)(1) also apply for new engines that will be installed in equipment subject to equipment-based standards, except that the engines may qualify for an exemption under § 1068.260(c) or § 1068.262.

(iv) Where the regulations specify that you are allowed to introduce engines/equipment into U.S. commerce without a certificate of conformity, you may take any of the otherwise prohibited actions specified in this paragraph (a)(1) with respect to those engines/equipment.

(2) *Reporting and recordkeeping.* This chapter requires you to record certain types of information to show that you meet our standards. You must comply with these requirements to make and maintain required records (including those described in § 1068.501). You may not deny us access to your records or the ability to copy your records if we have the authority to see or copy them. Also, you must give us complete and accurate reports and information without delay as required under this chapter. Failure to comply with the requirements of this paragraph is prohibited. We may assess a civil penalty up to $44,539 for each day you are in violation. In addition, knowingly submitting false information is a violation of 18 U.S.C. 1001, which may involve criminal penalties and up to five years imprisonment.

(3) *Testing and access to facilities.* You may not keep us from entering your facility to test engines/equipment or inspect if we are authorized to do so. Also, you must perform the tests we require (or have the tests done for you). Failure to perform this testing is prohibited. We may assess a civil penalty up to $44,539 for each day you are in violation.

(b) The following prohibitions apply to everyone with respect to the engines and equipment to which this part applies:

(1) *Tampering.* You may not remove or render inoperative any device or element of design installed on or in engines/equipment in compliance with the regulations prior to its sale and delivery to the ultimate purchaser. You also may not knowingly remove or render inoperative any such device or element of design after such sale and delivery to the ultimate purchaser. This includes, for example, operating an engine without a supply of appropriate quality urea if the emission control system relies on urea to reduce NO_X emissions or the use of incorrect fuel or engine oil that renders the emission control system inoperative. Section 1068.120 describes how this applies to rebuilding engines. See the standard-setting part, which may include additional provisions regarding actions prohibited by this requirement. For a manufacturer or dealer, we may assess a civil penalty up to $44,539 for each engine or piece of equipment in violation. For anyone else, we may assess a civil penalty up to $4,454 for each engine or piece of equipment in violation. This prohibition does not apply in any of the following situations:

(i) You need to repair the engine/equipment and you restore it to proper functioning when the repair is complete.

(ii) You need to modify the engine/equipment to respond to a temporary emergency and you restore it to proper functioning as soon as possible.

(iii) You modify new engines/equipment that another manufacturer has already certified to meet emission standards and recertify them under your own family. In this case you must tell the original manufacturer not to include the modified engines/equipment in the original family.

(2) *Defeat devices.* You may not knowingly manufacture, sell, offer to sell, or install, any component that bypasses, impairs, defeats, or disables the control of emissions of any regulated pollutant, except as explicitly allowed by the standard-setting part. We may assess a

civil penalty up to $4,454 for each component in violation.

(3) *Stationary engines.* For an engine that is excluded from any requirements of this chapter because it is a stationary engine, you may not move it or install it in any mobile equipment except as allowed by the provisions of this chapter. You may not circumvent or attempt to circumvent the residence-time requirements of paragraph (2)(iii) of the nonroad engine definition in § 1068.30. Anyone violating this paragraph (b)(3) is deemed to be a manufacturer in violation of paragraph (a)(1) of this section. We may assess a civil penalty up to $44,539 for each engine or piece of equipment in violation.

(4) *Competition engines/equipment.* (i) For uncertified engines/equipment that are excluded or exempted as new engines/equipment from any requirements of this chapter because they are to be used solely for competition, you may not use any of them in a manner that is inconsistent with use solely for competition. Anyone violating this paragraph (b)(4)(i) is deemed to be a manufacturer in violation of paragraph (a)(1) of this section. We may assess a civil penalty up to $44,539 for each engine or piece of equipment in violation.

(ii) For certified nonroad engines/equipment that qualify for exemption from the tampering prohibition as described in § 1068.235 because they are to be used solely for competition, you may not use any of them in a manner that is inconsistent with use solely for competition. Anyone violating this paragraph (b)(4)(ii) is in violation of paragraph (b)(1) or (2) of this section.

(5) *Importation.* You may not import an uncertified engine or piece of equipment if it is defined to be new in the standard-setting part with a model year for which emission standards applied. Anyone violating this paragraph (b)(5) is deemed to be a manufacturer in violation of paragraph (a)(1) of this section. We may assess a civil penalty up to $44,539 for each engine or piece of equipment in violation. Note the following:is excluded

(i) The definition of new is broad for imported engines/equipment; uncertified engines and equipment (including used engines and equipment) are generally considered to be new when imported.

(ii) Used engines/equipment that were originally manufactured before applicable EPA standards were in effect are generally not subject to emission standards.

(6) *Warranty, recall, and maintenance instructions.* You must meet your obligation to honor your emission-related warranty under § 1068.115, including any commitments you identify in your application for certification. You must also fulfill all applicable requirements under subpart F of this part related to emission-related defects and recalls. You must also provide emission-related installation and maintenance instructions as described in the standard-setting part. Failure to meet these obligations is prohibited. Also, except as specifically provided by regulation, you are prohibited from directly or indirectly communicating to the ultimate purchaser or a later purchaser that the emission-related warranty is valid only if the owner has service performed at authorized facilities or only if the owner uses authorized parts, components, or systems. We may assess a civil penalty up to $44,539 for each engine or piece of equipment in violation.

(7) *Labeling.* (i) You may not remove or alter an emission control information label or other required permanent label except as specified in this paragraph (b)(7) or otherwise allowed by this chapter. Removing or altering an emission control information label is a violation of paragraph (b)(1) of this section. However, it is not a violation to remove a label in the following circumstances:

(A) The engine is destroyed, is permanently disassembled, or otherwise loses its identity such that the original title to the engine is no longer valid.

(B) The regulations specifically direct you to remove the label. For example, *see* § 1068.235.

(C) The part on which the label is mounted needs to be replaced. In this case, you must have a replacement part with a duplicate of the original label installed by the certifying manufacturer or an authorized agent, except that the replacement label may omit the date of manufacture if applicable.

We generally require labels to be permanently attached to parts that will not normally be replaced, but this provision allows for replacements in unusual circumstances, such as damage in a collision or other accident.

(D) The original label is incorrect, provided that it is replaced with the correct label from the certifying manufacturer or an authorized agent. This allowance to replace incorrect labels does not affect whether the application of an incorrect original label is a violation.

(ii) Removing or altering a temporary or removable label contrary to the provisions of this paragraph (b)(7)(ii) is a violation of paragraph (b)(1) of this section.

(A) For labels identifying temporary exemptions, you may not remove or alter the label while the engine/equipment is in an exempt status. The exemption is automatically revoked for each engine/equipment for which the label has been removed.

(B) For temporary or removable consumer information labels, only the ultimate purchaser may remove the label.

(iii) You may not apply a false emission control information label. You also may not manufacture, sell, or offer to sell false labels. The application, manufacture, sale, or offer for sale of false labels is a violation of this section (such as paragraph (a)(1) or (b)(2) of this section). Note that applying an otherwise valid emission control information label to the wrong engine is considered to be applying a false label.

(c) If you cause someone to commit a prohibited act in paragraph (a) or (b) of this section, you are in violation of that prohibition.

(d) Exemptions from these prohibitions are described in subparts C and D of this part and in the standard-setting part.

(e) The standard-setting parts describe more requirements and prohibitions that apply to manufacturers (including importers) and others under this chapter.

(f) The specification of prohibitions and penalties in this part does not limit the prohibitions and penalties described in the Clean Air Act. Additionally, a single act may trigger multiple violations under this section and the Act. We may pursue all available administrative, civil, or criminal remedies for those violations even if the regulation references only a single prohibited act in this section.

(g) [Reserved]

(h) The maximum penalty values listed in paragraphs (a) and (b) of this section and in § 1068.125 apply as of August 1, 2016. Maximum penalty values for earlier violations are published in 40 CFR part 19. Maximum penalty limits may be adjusted after August 1, 2016 based on the Consumer Price Index. The specific regulatory provisions for changing the maximum penalties, published in 40 CFR part 19, reference the applicable U.S. Code citation on which the prohibited action is based. The following table is shown here for informational purposes:

TABLE 1 OF § 1068.101—LEGAL CITATION FOR SPECIFIC PROHIBITIONS FOR DETERMINING MAXIMUM PENALTY AMOUNTS

Part 1068 regulatory citation of prohibited action	General description of prohibition	U.S. Code citation for Clean Air Act authority
§ 1068.101(a)(1)	Introduction into U.S. commerce of an uncertified source.	42 U.S.C. 7522(a)(1) and (a)(4).
§ 1068.101(a)(2)	Failure to provide information	42 U.S.C. 7522(a)(2).
§ 1068.101(a)(3)	Denying access to facilities	42 U.S.C. 7522(a)(2).
§ 1068.101(b)(1)	Tampering with emission controls by a manufacturer or dealer.	42 U.S.C. 7522(a)(3).
	Tampering with emission controls by someone other than a manufacturer or dealer.	
§ 1068.101(b)(2)	Sale or use of a defeat device	42 U.S.C. 7522(a)(3).
§ 1068.101(b)(3)	Mobile use of a stationary engine	42 U.S.C. 7522(a)(1) and (a)(4).
§ 1068.101(b)(4)	Noncompetitive use of uncertified engines/equipment that is exempted for competition.	42 U.S.C. 7522(a)(1) and (a)(4).
§ 1068.101(b)(5)	Importation of an uncertified source	42 U.S.C. 7522(a)(1) and (a)(4).
§ 1068.101(b)(6)	Recall and warranty	42 U.S.C. 7522(a)(4).
§ 1068.101(b)(7)	Removing labels	42 U.S.C. 7522(a)(3).

[75 FR 23059, Apr. 30, 2010; 81 FR 74222, Oct. 25, 2016]

§ 1068.103 Provisions related to the duration and applicability of certificates of conformity.

(a) Engines/equipment covered by a certificate of conformity are limited to those that are produced during the period specified in the certificate and conform to the specifications described in the certificate and the associated application for certification. For the purposes of this paragraph (a), ''specifications'' includes the emission control information label and any conditions or limitations identified by the manufacturer or EPA. For example, if the application for certification specifies certain engine configurations, the certificate does not cover any configurations that are not specified. We may ignore any information provided in the application that we determine is not relevant to a demonstration of compliance with applicable regulations, such as your projected production volumes in many cases.

(b) Unless the standard-setting part specifies otherwise, determine the production period corresponding to each certificate of conformity as specified in this paragraph (b). In general, the production period is the manufacturer's annual production period identified as a model year.

(1) For engines/equipment subject to emission standards based on model years, the first day of the annual production period can be no earlier than January 2 of the calendar year preceding the year for which the model year is named, or the earliest date of manufacture for any engine/equipment in the engine family, whichever is later. The last day of the annual production period can be no later than December 31 of the calendar year for which the model year is named or the latest date of manufacture for any engine/equipment in the engine family, whichever is sooner. Note that this approach limits how you can designate a model year for your engines/equipment; however, it does not limit your ability to meet more stringent emission standards early where this is permitted in the regulation.

(2) For fuel-system components certified to evaporative emission standards based on production periods rather than model years, the production period is either the calendar year or a longer period we specify consistent with the manufacturer's normal production practices.

(c) A certificate of conformity will not cover engines/equipment you produce with a date of manufacture earlier than the date you submit the application for certification for the family. You may start to produce engines/equipment after you submit an application for certification and before the effective date of a certificate of conformity, subject to the following conditions:

(1) The engines/equipment must conform in all material respects to the engines/equipment described in your application. Note that if we require you to modify your application, you must ensure that all engines/equipment conform to the specifications of the modified application.

(2) The engines/equipment may not be sold, offered for sale, introduced into U.S. commerce, or delivered for introduction into U.S. commerce before the effective date of the certificate of conformity.

(3) You must notify us in your application for certification that you plan to use the provisions of this paragraph (c) and when you intend to start production. If the standard-setting part specifies mandatory testing for production-line engines, you must start testing as directed in the standard-setting part based on your actual start of production, even if that occurs before we approve your certification. You must also agree to give us full opportunity to inspect and/or test the engines/equipment during and after production. For example, we must have the opportunity to specify selective enforcement audits as allowed by the standard-setting part and the Clean Air Act as if the engines/equipment were produced after the effective date of the certificate.

(4) See § 1068.262 for special provisions that apply for secondary engine manufacturers receiving shipment of partially complete engines before the effective date of a certificate.

(d) The prohibition in §1068.101(a)(1) against offering to sell engines/equipment without a valid certificate of conformity generally does not apply for engines/equipment that have not yet been produced. You may contractually agree to produce engines/equipment before obtaining the required certificate of conformity. This is intended to allow manufacturers of low-volume products to establish a sufficient market for engines/equipment before going through the effort to certify.

(e) Engines/equipment with a date of manufacture after December 31 of the calendar year for which a model year is named are not covered by the certificate of conformity for that model year. You must submit an application for a new certificate of conformity demonstrating compliance with applicable standards even if the engines/equipment are identical to those with a date of manufacture before December 31.

(f) The flexible approach to naming the annual production period described in paragraph (b)(1) of this section is intended to allow you to introduce new products at any point during the year. This is based on the expectation that production periods generally run on consistent schedules from year to year. You may not use this flexibility to arrange your production periods such that you can avoid annual certification.

(g) An engine is generally assigned a model year based on its date of manufacture, which is typically based on the date the crankshaft is installed in the engine (see §1068.30). You may not circumvent the provisions of §1068.101(a)(1) by stockpiling engines with a date of manufacture before new or changed emission standards take effect by deviating from your normal production and inventory practices. (For purposes of this paragraph (g), normal production and inventory practices means those practices you typically use for similar families in years in which emission standards do not change. We may require you to provide us routine production and inventory records that document your normal practices for the preceding eight years.) For most engines you should plan to complete the assembly of an engine of a given model year into its certified configuration within the first week after the end of the model year if new emission standards start to apply in that model year. For special circumstances it may be appropriate for your normal business practice to involve more time. For engines with per-cylinder displacement below 2.5 liters, if new emission standards start to apply in a given year, we would consider an engine not to be covered by a certificate of conformity for the preceding model year if the engine is not assembled in a compliant configuration within 30 days after the end of the model year for that engine family. (NOTE: an engine is considered ''in a compliant configuration'' without being fully assembled if §1068.260(a) or (b) authorizes shipment of the engine without certain components.) For example, in the case where new standards apply in the 2010 model year, and your normal production period is based on the calendar year, you must complete the assembly of all your 2009 model year engines before January 31, 2010, or an earlier date consistent with your normal production and inventory practices. For engines with per-cylinder displacement at or above 2.5 liters, this time may not exceed 60 days. Note that for the purposes of this paragraph (g), an engine shipped under §1068.261 is deemed to be a complete engine. Note also that §1068.245 allows flexibility for additional time in unusual circumstances. Note finally that disassembly of complete engines and reassembly (such as for shipment) does not affect the determination of model year; the provisions of this paragraph (g) apply based on the date on which initial assembly is complete.

(h) This paragraph (h) describes the effect of suspending, revoking, or voiding a certificate of conformity. See the definitions of ''suspend,'' ''revoke,'' and ''void'' in §1068.30. Engines/equipment produced at a time when the otherwise applicable certificate of conformity has been suspended or revoked are not covered by a certificate of conformity. Where a certificate of conformity is void, all engines/equipment produced under that certificate of conformity

are not and were not covered by a certificate of conformity. In cases of suspension, engines/equipment will be covered by a certificate only if they are produced after the certificate is reinstated or a new certificate is issued. In cases of revocation and voiding, engines/equipment will be covered by a certificate only if they are produced after we issue a new certificate. 42 U.S.C. 7522(a)(1) and § 1068.101(a)(1) prohibit selling, offering for sale, introducing into commerce, delivering for introduction into commerce, and importing engines/equipment that are not covered by a certificate of conformity, and they prohibit anyone from causing another to violate these prohibitions.

(i) You may transfer a certificate to another entity only in the following cases:

(1) You may transfer a certificate to a parent company, including a parent company that purchases your company after we have issued your certificate.

(2) You may transfer a certificate to a subsidiary including a subsidiary you purchase after we have issued your certificate.

(3) You may transfer a certificate to a subsidiary of your parent company.

[81 FR 74224, Oct. 25, 2016]

§ 1068.105 What other provisions apply to me specifically if I manufacture equipment needing certified engines?

This section describes general provisions that apply to equipment manufacturers for sources subject to engine-based standards. See the standard-setting part for any requirements that apply for certain applications. See § 1068.101 for penalties associated with violations under this section and for other prohibitions related to your equipment.

(a) *Transitioning to new engine-based standards.* If new engine-based emission standards apply in a given model year, your equipment produced in that calendar year (or later) must have engines that are certified to the new standards, except that you may continue to use up normal inventories of engines that were built before the date of the new or changed standards. For purposes of this paragraph (a), normal inventory applies for engines you possess and engines from your engine supplier's normal inventory. (NOTE: this paragraph (a) does not apply in the case of new remanufacturing standards.) We may require you and your engine suppliers to provide us routine production and/or inventory records that document your normal practices for the preceding eight years. For example, if you have records documenting that your normal inventory practice is to keep on hand a one-month supply of engines based on your upcoming production schedules, and a new tier of standards starts to apply for the 2015 model year, you may order engines consistent with your normal inventory requirements late in the engine manufacturer's 2014 model year and install those engines in your equipment consistent with your normal production schedule. Also, if your model year starts before the end of the calendar year preceding new standards, you may use engines from the previous model year for those units you completely assemble before January 1 of the year that new standards apply. If emission standards for the engine do not change in a given model year, you may continue to install engines from the previous model year without restriction (or any earlier model year for which the same standards apply). You may not circumvent the provisions of § 1068.101(a)(1) by stockpiling engines that were built before new or changed standards take effect. Similarly, you may not circumvent the provisions of § 1068.101(a)(1) by knowingly installing engines that were stockpiled by engine suppliers in violation of § 1068.103(f). Note that this allowance does not apply for equipment subject to equipment-based standards. See 40 CFR 1060.601 for similar provisions that apply for equipment subject to evaporative emission standards. Note that the standard-setting part may impose further restrictions on using up inventories of engines from an earlier model year under this paragraph (a).

(b) *Installing engines or certified components.* The provisions in § 1068.101(a)(1) generally prohibit you from introducing into U.S. commerce any new equipment that includes engines not covered by a certificate of

conformity. In addition, you must follow the engine manufacturer's emission-related installation instructions. For example, you may need to constrain where you place an exhaust aftertreatment device or integrate into your equipment models a device for sending visual or audible signals to the operator. Similarly, you must follow the emission-related installation instructions from the manufacturer of a component that has been certified for controlling evaporative emissions under 40 CFR part 1060. Not meeting the manufacturer's emission-related installation instructions is a violation of one or more of the prohibitions of § 1068.101. See § 1068.261 for special provisions that apply when the engine manufacturer delegates final assembly of emission controls to you.

(c) *Attaching a duplicate label.* If you obscure the engine's label, you must do four things to avoid violating § 1068.101(a)(1):

(1) Send a request for duplicate labels in writing on your company's letterhead to the engine manufacturer. Include the following information in your request:

(i) Identify the type of equipment and the specific engine and equipment models needing duplicate labels.

(ii) Identify the family (from the original engine label).

(iii) State the reason that you need a duplicate label for each equipment model.

(iv) Identify the number of duplicate labels you will need.

(2) Permanently attach the duplicate label to your equipment by securing it to a part needed for normal operation and not normally requiring replacement. Make sure an average person can easily read it. Note that attaching an inaccurate duplicate label may be a violation of § 1068.101(b)(7).

(3) Destroy any unused duplicate labels if you find that you will not need them.

(4) Keep the following records for at least eight years after the end of the model year identified on the engine label:

(i) Keep a copy of your written request.

(ii) Keep drawings or descriptions that show how you apply the duplicate labels to your equipment.

(iii) Maintain a count of those duplicate labels you use and those you destroy.

[73 FR 59344, Oct. 8, 2008, as amended at 75 FR 23062, Apr. 30, 2010; 81 FR 74225, Oct. 25, 2016]

§ 1068.110 Other provisions for engines/equipment in service.

(a) *Aftermarket parts and service.* As the certifying manufacturer, you may not require anyone to use your parts or service to maintain or repair an engine or piece of equipment, unless we approve this in your application for certification. It is a violation of the Clean Air Act for anyone to manufacture any part if one of its main effects is to reduce the effectiveness of the emission controls. See § 1068.101(b)(2).

(b) *Certifying aftermarket parts.* As the manufacturer or rebuilder of an aftermarket engine or equipment part, you may—but are not required to—certify according to 40 CFR part 85, subpart V, that using the part will not cause engines/equipment to fail to meet emission standards. Whether you certify or not, you must keep any information showing how your parts or service affect emissions.

(c) *Compliance with standards.* We may test engines and equipment to investigate compliance with emission standards and other requirements. We may also require the manufacturer to do this testing.

(d) *Defeat devices.* We may test components, engines, and equipment to investigate potential defeat devices. We may also require the manufacturer to do this testing. If we choose to investigate one of your designs, we may require you to show us that a component is not a defeat device, and that an engine/equipment does not have a defeat device. To do this, you may have to share with us information regarding test programs, engineering evaluations, design specifications, calibrations, on-board computer algorithms, and design strategies. It is a violation of the Clean Air Act for anyone to make, install or use defeat devices as described in § 1068.101(b)(2) and the standard-setting part.

(e) *Warranty and maintenance.* Owners are responsible for properly maintaining their engines/equipment; however, owners may make warranty claims against the manufacturer for all expenses related to diagnosing and repairing or replacing emission-related parts, as described in § 1068.115. Manufacturers may ask to limit diagnosis and repair to authorized service facilities, provided this does not limit their ability to meet their warranty obligations under § 1068.115. The warranty period begins when the equipment is first placed into service. See the standard-setting part for specific requirements. It is a violation of the Clean Air Act for anyone to disable emission controls; see § 1068.101(b)(1) and the standard-setting part.

[73 FR 59344, Oct. 8, 2008, as amended at 81 FR 74225, Oct. 25, 2016]

§ 1068.115 What are manufacturers' emission-related warranty requirements?

Section 207(a) of the Clean Air Act (42 U.S.C. 7541(a)) requires certifying manufacturers to warrant to purchasers that their engines/equipment are designed, built, and equipped to conform at the time of sale to the applicable regulations for their full useful life, including a warranty that the engines/equipment are free from defects in materials and workmanship that would cause any engine/equipment to fail to conform to the applicable regulations during the specified warranty period. This section codifies the warranty requirements of section 207(a) without intending to limit these requirements.

(a) As a certifying manufacturer, you may deny warranty claims only for failures that have been caused by the owner's or operator's improper maintenance or use, by accidents for which you have no responsibility, or by acts of God. For example, you would not need to honor warranty claims for failures that have been directly caused by the operator's abuse of the engine/equipment or the operator's use of the engine/equipment in a manner for which it was not designed and are not attributable to you in any way.

(b) As a certifying manufacturer, you may not deny emission-related warranty claims based on any of the following:

(1) Maintenance or other service you or your authorized facilities performed.

(2) Engine/equipment repair work that an operator performed to correct an unsafe, emergency condition attributable to you as long as the operator tries to restore the engine/equipment to its proper configuration as soon as possible.

(3) Any action or inaction by the operator unrelated to the warranty claim.

(4) Maintenance that was performed more frequently than you specify.

(5) Anything that is your fault or responsibility.

(6) The use of any fuel that is commonly available where the equipment operates unless your written maintenance instructions state that this fuel would harm the equipment's emission control system and operators can readily find the proper fuel.

§ 1068.120 Requirements for rebuilding engines.

(a) This section describes the steps to take when rebuilding engines to avoid violating the tampering prohibition in § 1068.101(b)(1). These requirements apply to anyone rebuilding an engine subject to this part, but the recordkeeping requirements in paragraphs (j) and (k) of this section apply only to businesses. For maintenance or service that is not rebuilding, including any maintenance related to evaporative emission controls, you may not make changes that might increase emissions of any regulated pollutant, but you do not need to keep any records.

(b) The term ''rebuilding'' refers to a rebuild of an engine or engine system, including a major overhaul in which you replace the engine's pistons or power assemblies or make other changes that significantly increase the service life of the engine. It also includes replacing or rebuilding an engine's turbocharger or aftercooler or the engine's systems for fuel metering or electronic control so that it significantly increases the service life of the engine. For these provisions, rebuilding may or may not involve removing the engine from the equipment. Rebuilding

does not normally include the following:

(1) Scheduled emission-related maintenance that the standard-setting part allows during the useful life period (such as replacing fuel injectors).

(2) Unscheduled maintenance that occurs commonly within the useful life period. For example, replacing a water pump is not rebuilding an engine.

(c) [Reserved]

(d) If you rebuild an engine or engine system, you must have a reasonable technical basis for knowing that the rebuilt engine's emission control system performs as well as, or better than, it performs in its certified configuration. Identify the model year of the resulting engine configuration. You have a reasonable basis if you meet two main conditions:

(1) Install parts—new, used, or rebuilt—so a person familiar with engine design and function would reasonably believe that the engine with those parts will control emissions of all pollutants at least to the same degree as with the original parts. For example, it would be reasonable to believe that parts performing the same function as the original parts (and to the same degree) would control emissions to the same degree as the original parts.

(2) Adjust parameters or change design elements only according to the original engine manufacturer's instructions. Or, if you differ from these instructions, you must have data or some other technical basis to show you should not expect in-use emissions to increase.

(e) If the rebuilt engine remains installed or is reinstalled in the same piece of equipment, you must rebuild it to the original configuration, except as allowed by this paragraph (e). You may rebuild it to a different certified configuration of the same or later model year. You may also rebuild it to a certified configuration from an earlier model year as long as the earlier configuration is as clean or cleaner than the original configuration. For purposes of this paragraph (e), ''as clean or cleaner'' means one of the following:

(1) For engines not certified with a Family Emission Limit for calculating credits for a particular pollutant, this means that the same emission standard applied for both model years. This includes supplemental standards such as Not-to-Exceed standards.

(2) For engines certified with a Family Emission Limit for a particular pollutant, this means that the configuration to which the engine is being rebuilt has a Family Emission Limit for that pollutant that is at or below the standard that applied to the engine originally, and is at or below the original Family Emission Limit.

(f) A rebuilt engine or other used engine may replace a certified engine in a piece of equipment only if the engine was built and/or rebuilt to a certified configuration meeting equivalent or more stringent emission standards. Note that a certified configuration would generally include more than one model year. A rebuilt engine being installed that is from the same model year or a newer model year than the engine being replaced meets this requirement. The following examples illustrate the provisions of this paragraph (f):

(1) In most cases, you may use a rebuilt Tier 2 engine to replace a Tier 1 engine or another Tier 2 engine.

(2) You may use a rebuilt Tier 1 engine to replace a Tier 2 engine if the two engines differ only with respect to model year or other characteristics unrelated to emissions since such engines would be considered to be in the same configuration. This may occur if the Tier 1 engine had emission levels below the Tier 2 standards or if the Tier 2 engine was certified with a Family Emission Limit for calculating emission credits.

(3) You may use a rebuilt engine that originally met the Tier 1 standards without certification, as provided under §1068.265, to replace a certified Tier 1 engine. This may occur for engines produced under a Transition Program for Equipment Manufacturers such as that described in 40 CFR 1039.625.

(4) You may never replace a certified engine with an engine rebuilt to a configuration that does not meet EPA

emission standards. Note that, for purposes of this paragraph (f)(4), a configuration is considered to meet EPA emission standards if it was previously certified or was otherwise shown to meet emission standards (see § 1068.265).

(5) The standard-setting part may apply further restrictions to situations involving installation of used engines to repower equipment. For example, see 40 CFR part 1037 for provisions that apply for glider vehicles.

(g) Do not erase or reset emission-related codes or signals from onboard monitoring systems without diagnosing and responding appropriately to any diagnostic codes. This requirement applies regardless of the manufacturer's reason for installing the monitoring system and regardless of its form or interface. Clear any codes from diagnostic systems when you return the rebuilt engine to service. Do not disable a diagnostic signal without addressing its cause.

(h) When you rebuild an engine, check, clean, adjust, repair, or replace all emission-related components (listed in Appendix I of this part) as needed according to the original manufacturer's recommended practice. In particular, replace oxygen sensors, replace the catalyst if there is evidence of malfunction, clean gaseous fuel-system components, and replace fuel injectors (if applicable), unless you have a reasonable technical basis for believing any of these components do not need replacement.

(i) If you are installing an engine that someone else has rebuilt, check all emission-related components listed in Appendix I of this part as needed according to the original manufacturer's recommended practice.

(j) Keep at least the following records for all engines except spark-ignition engines with total displacement below 225 cc:

(1) Identify the hours of operation (or mileage, as appropriate) at the time of rebuild. These may be noted as approximate values if the engine has no hour meter (or odometer).

(2) Identify the work done on the engine or any emission-related control components, including a listing of parts and components you used.

(3) Describe any engine parameter adjustments.

(4) Identify any emission-related codes or signals you responded to and reset.

(k) You must show us or send us your records if we ask for them. Keep records for at least two years after rebuilding an engine. Keep them in any format that allows us to readily review them.

(1) You do not need to keep information that is not reasonably available through normal business practices. We do not expect you to have information that you cannot reasonably access.

(2) You do not need to keep records of what other companies do.

(3) You may keep records based on families rather than individual engines if that is the way you normally do business.

[73 FR 59344, Oct. 8, 2008, as amended at 75 FR 23062, Apr. 30, 2010; 81 FR 74225, Oct. 25, 2016]

§ 1068.125 What happens if I violate the regulations?

(a) *Civil penalties and injunctions.* We may bring a civil action to assess and recover civil penalties and/or enjoin and restrain violations in the United States District Court for the district where you allegedly violated a requirement, or the district where you live or have your main place of business. Actions to assess civil penalties or restrain violations of § 1068.101 must be brought by and in the name of the United States. The selected court has jurisdiction to restrain violations and assess civil penalties.

(1) To determine the amount of a civil penalty and reach a just conclusion, the court considers these factors:

(i) The seriousness of your violation.

(ii) How much you benefited or saved because of the violation.

(iii) The size of your business.

(iv) Your history of compliance with Title II of the Clean Air Act (42 U.S.C. 7401–7590).

(v) What you did to remedy the violation.

(vi) How the penalty will affect your ability to continue in business.

(vii) Such other matters as justice may require.

(2) Subpoenas for witnesses who must attend a district court in any district may apply to any other district.

(b) *Administrative penalties.* Instead of bringing a civil action, we may assess administrative penalties if the total is less than $356,312 against you individually. This maximum penalty may be greater if the Administrator and the Attorney General jointly determine that a greater administrative penalty assessment is appropriate, or if the limit is adjusted under 40 CFR part 19. No court may review this determination. Before we assess an administrative penalty, you may ask for a hearing as described in subpart G of this part. The Administrator may compromise or remit, with or without conditions, any administrative penalty that may be imposed under this section.

(1) To determine the amount of an administrative penalty, we will consider the factors described in paragraph (a)(1) of this section.

(2) An administrative order we issue under this paragraph (b) becomes final 30 days after we issue it unless you ask for judicial review by that time (see paragraph (c) of this section). You may ask for review by any of the district courts listed in paragraph (a) of this section. Send the Administrator a copy of the filing by certified mail.

(3) We will not pursue an administrative penalty for a particular violation if either of the following two conditions is true:

(i) We are separately prosecuting the violation under this subpart.

(ii) We have issued a final order for a violation, no longer subject to judicial review, for which you have already paid a penalty.

(c) *Judicial review.* If you ask a court to review a civil or administrative penalty, we will file in the appropriate court within 30 days of your request a certified copy or certified index of the record on which the court or the Administrator issued the order.

(1) The judge may set aside or remand any order issued under this section only if one of the following is true:

(i) Substantial evidence does not exist in the record, taken as a whole, to support finding a violation.

(ii) The Administrator's assessment of the penalty is an abuse of discretion.

(2) The judge may not add civil penalties unless our penalty is an abuse of discretion that favors you.

(d) *Effect of enforcement actions on other requirements.* Our pursuit of civil or administrative penalties does not affect or limit our authority to enforce any provisions of this chapter.

(e) *Penalties.* In any proceedings, the United States government may seek to collect civil penalties assessed under this section.

(1) Once a penalty assessment is final, if you do not pay it, the Administrator will ask the Attorney General to bring a civil action in an appropriate district court to recover the money. We may collect interest from the date of the final order or final judgment at rates established by the Internal Revenue Code of 1986 (26 U.S.C. 6621(a)(2)). In this action to collect overdue penalties, the court will not review the validity, amount, and appropriateness of the penalty.

(2) In addition, if you do not pay the full amount of a penalty on time, you must then pay more to cover interest, enforcement expenses (including attorney's fees and costs for collection), and a quarterly nonpayment penalty for each quarter you do not pay. The quarterly nonpayment penalty is 10 percent of your total penalties plus any unpaid nonpayment penalties from previous quarters.

[73 FR 59344, Oct. 8, 2008, as amended at 75 FR 23062, Apr. 30, 2010; 81 FR 74226, Oct. 25, 2016]

Subpart C—Exemptions and Exclusions

§ 1068.201 General exemption and exclusion provisions.

We may exempt new engines/equipment from some or all of the prohibited acts or requirements of this part under provisions described in this subpart. We may exempt nonroad engines/equipment already placed in service in the United States from the prohibition in § 1068.101(b)(1) if the exemption for nonroad engines/equipment used solely for competition applies (see § 1068.235). In addition, see § 1068.1 and the standard-setting parts to determine if other engines/equipment are excluded from some or all of the regulations in this chapter.

(a) This subpart identifies which engines/equipment qualify for exemptions and what information we need. We may require more information.

(b) If you violate any of the terms, conditions, instructions, or requirements to qualify for an exemption, we may void, revoke, or suspend the exemption.

(c) If you use an exemption under this subpart, we may require you to add a permanent or removable label to your exempted engines/equipment. You may ask us to modify these labeling requirements if it is appropriate for your engine/equipment.

(d) If you produce engines/equipment we exempt under this subpart, we may require you to make and keep records, perform tests, make reports and provide information as needed to reasonably evaluate the validity of the exemption.

(e) If you own or operate engines/equipment we exempt under this subpart, we may require you to provide information as needed to reasonably evaluate the validity of the exemption.

(f) Subpart D of this part describes how we apply these exemptions to engines/equipment you import (or intend to import).

(g) If you want to ask for an exemption or need more information, write to the Designated Compliance Officer.

(h) You may ask us to modify the administrative requirements for the exemptions described in this subpart or in subpart D of this part. We may approve your request if we determine that such approval is consistent with the intent of this part. For example, waivable administrative requirements might include some reporting requirements, but would not include any eligibility requirements or use restrictions.

(i) If you want to take an action with respect to an exempted or excluded engine/equipment that is prohibited by the exemption or exclusion, such as selling it, you need to certify the engine/equipment. We will issue a certificate of conformity if you send us an application for certification showing that you meet all the applicable requirements from the standard-setting part and pay the appropriate fee. Alternatively, we may allow you to include in an existing certified engine family those engines/equipment you modify (or otherwise demonstrate) to be identical to engines/equipment already covered by the certificate. We would base such an approval on our review of any appropriate documentation. These engines/equipment must have emission control information labels that accurately describe their status.

[73 FR 59344, Oct. 8, 2008, as amended at 74 FR 8428, Feb. 24, 2009; 81 FR 74226, Oct. 25, 2016]

§ 1068.210 Exempting test engines/equipment.

(a) We may exempt engines/equipment that you will use for research, investigations, studies, demonstrations, or training. Note that you are not required to get an exemption under this section for engines that are exempted under other provisions of this part, such as the manufacturer-owned exemption in § 1068.215.

(b) Anyone may ask for a testing exemption.

(c) If you are a certificate holder, you may request an exemption for engines/equipment you intend to include in test programs over a two-year period.

(1) In your request, tell us the maximum number of engines/equipment involved and describe how you will make sure exempted engines/equipment are used only for this testing. For example, if the exemption will involve other companies using your engines/equipment, describe your plans to track individual units so you can properly report on their final disposition.

(2) Give us the information described in paragraph (d) of this section if we ask for it.

(d) If you are not a certificate holder, do all the following things:

(1) Show that the proposed test program has a valid purpose under paragraph (a) of this section.

(2) Show you need an exemption to achieve the purpose of the test program (time constraints may be a basis for needing an exemption, but the cost of certification alone is not).

(3) Estimate the duration of the proposed test program and the number of engines/equipment involved.

(4) Allow us to monitor the testing.

(5) Describe how you will ensure that you stay within this exemption's purposes. Address at least the following things:

(i) The technical nature of the test.

(ii) The test site.

(iii) The duration and accumulated engine/equipment operation associated with the test.

(iv) Ownership and control of the engines/equipment involved in the test.

(v) The intended final disposition of the engines/equipment.

(vi) How you will identify, record, and make available the engine/equipment identification numbers.

(vii) The means or procedure for recording test results.

(e) If we approve your request for a testing exemption, we will send you a letter or a memorandum describing the basis and scope of the exemption. It will also include any necessary terms and conditions, which normally require you to do the following:

(1) Stay within the scope of the exemption.

(2) Create and maintain adequate records that we may inspect.

(3) Add a permanent label to all engines/equipment exempted under this section, consistent with § 1068.45, with at least the following items:

(i) The label heading ''EMISSION CONTROL INFORMATION''.

(ii) Your corporate name and trademark.

(iii) Engine displacement, family identification, and model year of the engine/equipment (as applicable), or whom to contact for further information.

(iv) The statement: ''THIS [engine, equipment, vehicle, etc.] IS EXEMPT UNDER 40 CFR 1068.210 OR 1068.215 FROM EMISSION STANDARDS AND RELATED REQUIREMENTS.''

(4) Tell us when the test program is finished.

(5) Tell us the final disposition of the engines/equipment.

[76 FR 57488, Sept. 15, 2011, as amended at 81 FR 74226, Oct. 25, 2016]

§ 1068.215 Exempting manufacturer-owned engines/equipment.

(a) You are eligible for this exemption for manufacturer-owned engines/equipment only if you are a certificate holder. Any engine for which you meet all applicable requirements under this section is exempt without request.

(b) Engines/equipment may be exempt without a request if they are nonconforming engines/equipment under your ownership, possession, and control and you do not operate them for purposes other than to develop products, assess production methods, or promote your engines/equipment in the marketplace, or other purposes we approve. You may not loan, lease, sell, or use the engine/equipment to generate revenue, either by itself or for an engine installed in a piece of equipment, except as allowed by § 1068.201(i). Note that this paragraph (b) does not prevent the sale or shipment of a partially complete engine to a secondary engine manufacturer that will meet the requirements of this paragraph (b). *See* § 1068.262 for provisions related to shipping partially complete engines to secondary engine manufacturers.

(c) To use this exemption, you must do three things:

(1) Establish, maintain, and keep adequately organized and indexed information on all exempted engines/equipment, including the engine/equipment identification number, the use of the engine/equipment on exempt status, and the final disposition of any engine/equipment removed from exempt status.

(2) Let us access these records, as described in § 1068.20.

(3) Add a permanent label to all engines/equipment exempted under this section, consistent with § 1068.45, with at least the following items:

(i) The label heading ''EMISSION CONTROL INFORMATION''.

(ii) Your corporate name and trademark.

(iii) Family identification and model year of the engine/equipment (as applicable), or whom to contact for further information.

(iv) The statement: ''THIS [engine, equipment, vehicle, etc.] IS EXEMPT UNDER 40 CFR 1068.210 OR 1068.215 FROM EMISSION STANDARDS AND RELATED REQUIREMENTS.''

[73 FR 59344, Oct. 8, 2008, as amended at 75 FR 23062, Apr. 30, 2010; 81 FR 74226, Oct. 25, 2016]

§ 1068.220 Exempting display engines/equipment.

(a) Anyone may request an exemption for display engines/equipment.

(b) Nonconforming display engines/equipment will be exempted if they are used only for displays in the interest of a business or the general public. This exemption does not apply to engines/equipment displayed for private use, private collections, or any other purpose we determine is inappropriate for a display exemption.

(c) You may operate the exempted engine/equipment, but only if we approve specific operation that is part of the display, or is necessary for the display (possibly including operation that is indirectly necessary for the display). We may consider any relevant factor in our approval process, including the extent of the operation, the overall emission impact, and whether the engine/equipment meets emission requirements of another country.

(d) You may sell or lease the exempted engine/equipment only with our advance approval.

(e) To use this exemption, you must add a permanent label to all engines/equipment exempted under this section, consistent with § 1068.45, with at least the following items:

(1) The label heading ''EMISSION CONTROL INFORMATION''.

(2) Your corporate name and trademark.

(3) Engine displacement, family identification, and model year of the engine/equipment (as applicable), or whom to contact for further information.

(4) The statement: ''THIS [engine, equipment, vehicle, etc.] IS EXEMPT UNDER 40 CFR 1068.220 FROM EMISSION STANDARDS AND RELATED REQUIREMENTS.''

(f) We may set other conditions for approval of this exemption.

[81 FR 74226, Oct. 25, 2016]

§ 1068.225 Exempting engines/equipment for national security.

The standards and requirements of the standard-setting part and the prohibitions in § 1068.101(a)(1) and (b) do not apply to engines exempted under this section.

(a) An engine/equipment is exempt without a request if it will be owned by an agency of the Federal Government responsible for national defense and it meets at least one of the following criteria:

(1) An engine is automatically exempt in cases where the equipment in which it will be installed has armor, permanently attached weaponry, or other substantial features typical of military combat. Similarly, equipment subject to equipment-based standards is automatically exempt if it has any of these same features.

(2) In the case of marine vessels with compression-ignition engines, an engine is automatically exempt if the vessel in which it will be installed has specialized electronic warfare systems, unique stealth performance requirements, or unique combat maneuverability requirements.

(3) Gas turbine engines installed in marine vessels are automatically exempt.

(4) An engine/equipment is automatically exempt if it would need sulfur-sensitive technology to comply with emission standards, and it is intended to be used in areas outside the United States where ultra low-sulfur fuel is unavailable.

(b) For the circumstances described in paragraphs (a)(1) and (2) of this section, an engine/equipment is also exempt without a request if it will be used, but not owned, by an agency of the Federal Government responsible for national defense.

(c) Manufacturers may produce and ship engines/equipment under an automatic exemption as described in paragraph (a) or (b) of this section if they receive a written request for such engines/equipment from the appropriate federal agency.

(d) Manufacturers may request a national security exemption for engines/equipment not meeting the conditions of paragraphs (a) and (b) of this section as long as the request is endorsed by an agency of the Federal Government responsible for national defense. In your request, explain why you need the exemption.

(e) Add a permanent label to all engines/equipment exempted under this

section, consistent with § 1068.45, with at least the following items:

(1) The label heading ''EMISSION CONTROL INFORMATION''.

(2) Your corporate name and trademark.

(3) Engine displacement, family identification, and model year of the engine/equipment (as applicable), or whom to contact for further information.

(4) The statement: ''THIS [engine, equipment, vehicle, etc.] HAS AN EXEMPTION FOR NATIONAL SECURITY UNDER 40 CFR 1068.225.''

[81 FR 74227, Oct. 25, 2016]

§ 1068.230 Exempting engines/equipment for export.

The provisions of this section apply differently depending on the country to which the engines/equipment are being exported.

(a) We will not exempt new engines/equipment if you export them to a country with emission standards identical to ours, in which case they must be covered by a certificate of conformity. Where we determine that such engines/equipment will not be placed into service in the United States, the following provisions apply for special export-only certification:

(1) The engines/equipment must be covered by a certificate of conformity or equivalent approval issued by the destination country.

(2) To get an export-only certificate of conformity, send the Designated Compliance Officer a request. We may require you to provide information such as documentation of the foreign certification and related test data.

(3) No fees apply for export-only certification.

(4) The engines/equipment must be labeled as specified in paragraph (d) of this section.

(5) This export-only certificate is not considered a valid certificate of conformity with respect to the prohibition in § 1068.101(a)(1) for sale to ultimate purchasers in the United States. These engines/equipment also may not reenter the United States unless the regulations of this chapter otherwise allow it.

(b) Engines/equipment exported to a country not covered by paragraph (a) of this section are exempt from the prohibited acts in this part without a request. If you produce exempt engines/equipment for export and any of them are sold or offered for sale to an ultimate purchaser in the United States, the exemption is automatically void for those engines/equipment, except as specified in § 1068.201(i). You may operate engines/equipment in the United States only as needed to prepare and deliver them for export.

(c) Except as specified in paragraph (d) of this section, label exempted engines/equipment (including shipping containers if the label on the engine/equipment will be obscured by the container) with a label showing that they are not certified for sale or use in the United States. This label may be permanent or removable. See § 1068.45 for provisions related to the use of removable labels and applying labels to containers without labeling individual engines/equipment. The label must include your corporate name and trademark and the following statement: ''THIS [engine, equipment, vehicle, etc.] IS SOLELY FOR EXPORT AND IS THEREFORE EXEMPT UNDER 40 CFR 1068.230 FROM U.S. EMISSION STANDARDS AND RELATED REQUIREMENTS.''

(d) You must apply a permanent label as specified in this paragraph (d) for engines/equipment certified under paragraph (a) of this section. You may apply a permanent label as specified in this paragraph (d) instead of the label specified in paragraph (c) of this section for exempted engines/equipment. Add a permanent label meeting the requirements of the destination country and include in the bill of lading a statement that the engines/equipment must be exported to avoid violating EPA regulations. We may modify applicable labeling requirements to align with the labeling requirements that apply for the destination country.

(e) We may set other reasonable conditions to ensure that engines/equipment exempted under this section are not placed into service in the United States.

(f) Exemptions under this section expire once engines are no longer in the United States. Therefore exemptions under this section do not allow engines

to be imported back into the United States.

[73 FR 59344, Oct. 8, 2008, as amended at 81 FR 74227, Oct. 25, 2016]

§ 1068.235 Exempting nonroad engines/equipment used solely for competition.

The following provisions apply for nonroad engines/equipment, but not for motor vehicles or for stationary applications:

(a) New nonroad engines/equipment you produce that are used solely for competition are excluded from emission standards. We may exempt (rather than exclude) new nonroad engines/equipment you produce that you intend to be used solely for competition, where we determine that such engines/equipment are unlikely to be used contrary to your intent. See the standard-setting parts for specific provisions where applicable. Note that the definitions in the standard-setting part may deem uncertified engines/equipment to be new upon importation.

(b) If you modify any nonroad engines/equipment after they have been placed into service in the United States so they will be used solely for competition, they are exempt without request. This exemption applies only to the prohibitions in § 1068.101(b)(1) and (2) and are valid only as long as the engine/equipment is used solely for competition. You may not use the provisions of this paragraph (b) to circumvent the requirements that apply to the sale of new competition engines under the standard-setting part.

(c) If you modify any nonroad engines/equipment under paragraph (b) of this section, you must destroy the original emission labels. If you loan, lease, sell, or give any of these engines/equipment to someone else, you must tell the new owner (or operator, if applicable) in writing that they may be used only for competition.

[81 FR 74227, Oct. 25, 2016]

§ 1068.240 Exempting new replacement engines.

The prohibitions in § 1068.101(a)(1) do not apply to a new engine if it is exempt under this section as a replacement engine. For purposes of this section, a replacement engine is a new engine that is used to replace an engine that has already been placed into service (whether the previous engine is replaced in whole or in part with a new engine).

(a) *General provisions.* You are eligible for the exemption for new replacement engines only if you are a certificate holder. Note that this exemption does not apply for locomotives (40 CFR 1033.601) and that unique provisions apply to marine compression-ignition engines (40 CFR 1042.615).

(1) Paragraphs (b), (c), and (d) of this section describe different approaches for exempting new replacement engines where the engines are specially built to correspond to an engine model from an earlier model year that was subject to less stringent standards than those that apply for current production (or is no longer covered by a certificate of conformity). You must comply with the requirements of paragraph (b) of this section for any number of replacement engines you produce in excess of what we allow under paragraph (c) of this section. You must designate engines you produce under this section as tracked engines under paragraph (b) of this section or untracked engines under paragraph (c) of this section by the deadline for the report specified in paragraph (c)(3) of this section.

(2) Paragraph (e) of this section describes a simpler approach for exempting partially complete new replacement engines that are built under a certificate of conformity that is valid for producing engines for the current model year.

(3) For all the different approaches described in paragraphs (b) through (e) of this section, the exemption applies only for equipment that is 40 years old or less at the time of installation.

(b) *Previous-tier replacement engines with tracking.* You may produce any number of new engines to replace an engine already placed into service in a piece of equipment, as follows:

(1) The engine being replaced must have been either not originally subject to emission standards or originally subject to less stringent emission standards than those that apply to a new engine meeting current standards. The provisions of this paragraph (b)

also apply for engines that were originally certified to the same standards that apply for the current model year if you no longer have a certificate of conformity to continue producing that engine configuration.

(2) The following requirements and conditions apply for engines exempted under this paragraph (b):

(i) You must determine that you do not produce an engine certified to meet current requirements that has the appropriate physical or performance characteristics to repower the equipment. If the engine being replaced was made by a different company, you must make this determination also for engines produced by this other company.

(ii) In the case of premature engine failure, if the old engine was subject to emission standards, you must make the new replacement engine in a configuration identical in all material respects to the old engine and meet the requirements of §1068.265. You may alternatively make the new replacement engine in a configuration identical in all material respects to another certified engine of the same or later model year as long as the engine is not certified with a family emission limit higher than that of the old engine.

(iii) For cases not involving premature engine failure, you must make a separate determination for your own product line addressing every tier of emission standards that is more stringent than the emission standards for the engine being replaced. For example, if the engine being replaced was built before the Tier 1 standards started to apply and engines of that power category are currently subject to Tier 3 standards, you must also consider whether any Tier 1 or Tier 2 engines that you produce have the appropriate physical and performance characteristics for replacing the old engine; if you produce a Tier 2 engine with the appropriate physical and performance characteristics, you must use it as the replacement engine.

(iv) You must keep records to document your basis for making the determinations in paragraphs (b)(2)(i) and (iii) of this section.

(3) An old engine block replaced by a new engine exempted under this paragraph (b) may be reintroduced into U.S. commerce as part of an engine that meets either the current standards for new engines, the provisions for new replacement engines in this section, or another valid exemption. Otherwise, you must destroy the old engine block (or confirm that it has been destroyed), or export the engine block without its emission label.

(4) If the old engine was subject to emission standards, the replacement engine must meet the appropriate emission standards as specified in §1068.265. This generally means you must make the new replacement engine in a previously certified configuration.

(5) Except as specified in paragraph (d) of this section, you must add a permanent label, consistent with §1068.45, with your corporate name and trademark and the following additional information:

(i) Add the following statement if the new engine may only be used to replace an engine that was not subject to any emission standards under this chapter:

THIS REPLACEMENT ENGINE IS EXEMPT UNDER 40 CFR 1068.240. SELLING OR INSTALLING THIS ENGINE FOR ANY PURPOSE OTHER THAN TO REPLACE AN UNREGULATED ENGINE MAY BE A VIOLATION OF FEDERAL LAW SUBJECT TO CIVIL PENALTY. THIS ENGINE MAY NOT BE INSTALLED IN EQUIPMENT THAT IS MORE THAN 40 YEARS OLD AT THE TIME OF INSTALLATION.

(ii) Add the following statement if the new engine may replace an engine that was subject to emission standards:

THIS ENGINE COMPLIES WITH U.S. EPA EMISSION REQUIREMENTS FOR [Identify the appropriate emission standards (by model year, tier, or emission levels) for the replaced engine] ENGINES UNDER 40 CFR 1068.240. SELLING OR INSTALLING THIS ENGINE FOR ANY PURPOSE OTHER THAN TO REPLACE A [Identify the appropriate emission standards for the replaced engine, by model year(s), tier(s), or emission levels)] ENGINE MAY BE A VIOLATION OF FEDERAL LAW SUBJECT TO CIVIL PENALTY. THIS ENGINE MAY NOT BE INSTALLED IN EQUIPMENT THAT IS MORE THAN 40 YEARS OLD AT THE TIME OF INSTALLATION.

(6) Engines exempt under this paragraph (b) may not be introduced into U.S. commerce before you make the determinations under paragraph (b)(2)

of this section, except as specified in this paragraph (b)(6). We may waive this restriction for engines excluded under paragraph (c)(5) of this section that you ship to a distributor. Where we waive this restriction, you must take steps to ensure that the engine is installed consistent with the requirements of this paragraph (b). For example, at a minimum you must report to us annually whether engines we allowed you to ship to a distributor under this paragraph (b)(6) have been placed into service or remain in inventory. After an engine is placed into service, your report must describe how the engine was installed consistent with the requirements of this paragraph (b). Send these reports to the Designated Compliance Officer by the deadlines we specify.

(c) *Previous-tier replacement engines without tracking*. You may produce a limited number of new replacement engines that are not from a currently certified engine family under the provisions of this paragraph (c). If you produce new engines under this paragraph (c) to replace engines subject to emission standards, the new replacement engine must be in a configuration identical in all material respects to the old engine and meet the requirements of § 1068.265. You may make the new replacement engine in a configuration identical in all material respects to another certified engine of the same or later model year as long as the engine is not certified with a family emission limit higher than that of the old engine. The provisions of this paragraph (c) also apply for engines that were originally certified to the same standards that apply for the current model year if you no longer have a certificate of conformity to continue producing that engine configuration. This would apply, for example, for engine configurations that were certified in an earlier model year but are no longer covered by a certificate of conformity. The following provisions apply to engines exempted under this paragraph (c):

(1) You may produce a limited number of replacement engines under this paragraph (c) representing 0.5 percent of your annual production volumes for each category and subcategory of engines identified in Table 1 to this section (1.0 percent through 2013). Calculate this number by multiplying your annual U.S.-directed production volume by 0.005 (or 0.01 through 2013) and rounding to the nearest whole number. Determine the appropriate production volume by identifying the highest total annual U.S.-directed production volume of engines from the previous three model years for all your certified engines from each category or subcategory identified in Table 1 to this section, as applicable. In unusual circumstances, you may ask us to base your production limits on U.S.-directed production volume for a model year more than three years prior. You may include stationary engines and exempted engines as part of your U.S.-directed production volume. Include U.S.-directed engines produced by any affiliated companies and those from any other companies you license to produce engines for you.

(2) Count every exempted new replacement engine from your total U.S.-directed production volume that you produce in a given calendar year under this paragraph (c), including partially complete engines, except for the following:

(i) Engines built to specifications for an earlier model year under paragraph (b) of this section.

(ii) Partially complete engines exempted under paragraph (e) of this section.

(3) Send the Designated Compliance Officer a report by September 30 of the year following any year in which you produced exempted replacement engines under this paragraph (c). In your report include the total number of replacement engines you produce under this paragraph (c) for each category or subcategory, as appropriate, and the corresponding total production volumes determined under paragraph (c)(1) of this section. If you send us a report under this paragraph (c)(3), you must also include the total number of replacement engines you produced under paragraphs (b), (d), and (e) of this section (including any replacement marine engines subject to reporting under 40 CFR 1042.615). Count exempt engines as tracked under paragraph (b) of this section only if you meet all the requirements and conditions that apply

under paragraph (b) of this section by the due date for the annual report. You may include the information required under this paragraph (c)(3) in production reports required under the standard-setting part.

(4) Add a permanent label as specified in paragraph (b)(5) of this section. For partially complete engines, you may alternatively add a permanent or removable label as specified in paragraph (d) of this section.

(5) You may not use the provisions of this paragraph (c) for any engines in the following engine categories or subcategories:

(i) Land-based nonroad compression-ignition engines we regulate under 40 CFR part 1039 with a per-cylinder displacement at or above 7.0 liters.

(ii) Marine compression-ignition engines we regulate under 40 CFR part 1042 with a per-cylinder displacement at or above 7.0 liters.

(iii) Locomotive engines we regulate under 40 CFR part 1033.

(d) *Partially complete engines.* The following requirements apply if you ship a partially complete replacement engine under this section:

(1) Provide instructions specifying how to complete the engine assembly such that the resulting engine conforms to the applicable certificate of conformity or the specifications of § 1068.265. Where a partially complete engine can be built into multiple different configurations, you must be able to identify all the engine models and model years for which the partially complete engine may properly be used for replacement purposes. Your instructions must make clear how the final assembler can determine which configurations are appropriate for the engine they receive.

(2) You must label the engine as follows:

(i) If you have a reasonable basis to believe that the fully assembled engine will include the original emission control information label, you may add a removable label to the engine with your corporate name and trademark and the statement: ''This replacement engine is exempt under 40 CFR 1068.240.'' This would generally apply if all the engine models that are compatible with the replacement engine were covered by a certificate of conformity and they were labeled in a position on the engine or equipment that is not included as part of the partially complete engine being shipped for replacement purposes. Removable labels must meet the requirements specified in § 1068.45.

(ii) If you do not qualify for using a removable label in paragraph (d)(2)(i) of this section, you must add a permanent label in a readily visible location, though it may be obscured after installation in a piece of equipment. Include on the permanent label your corporate name and trademark, the engine's part number (or other identifying information), and the statement: ''THIS REPLACEMENT ENGINE IS EXEMPT UNDER 40 CFR 1068.240. THIS ENGINE MAY NOT BE INSTALLED IN EQUIPMENT THAT IS MORE THAN 40 YEARS OLD AT THE TIME OF INSTALLATION.'' If there is not enough space for this statement, you may alternatively add: ''REPLACEMENT'' or ''SERVICE ENGINE.'' For purposes of this paragraph (d)(2), engine part numbers permanently stamped or engraved on the engine are considered to be included on the label.

(e) *Partially complete current-tier replacement engines.* The provisions of paragraph (d) of this section apply for engines you produce from a current line of certified engines or vehicles if you ship them as partially complete engines for replacement purposes. This applies for engine-based and equipment-based standards as follows:

(1) Where engine-based standards apply, you may introduce into U.S. commerce short blocks or other partially complete engines from a currently certified engine family as replacement components for in-use equipment powered by engines you originally produced. You must be able to identify all the engine models and model years for which the partially complete engine may properly be used for replacement purposes.

(2) Where equipment-based standards apply, you may introduce into U.S. commerce engines that are identical to engines covered by a current certificate of conformity by demonstrating compliance with currently applicable

standards where the engines will be installed as replacement engines. These engines might be fully assembled, but we would consider them to be partially complete engines because they are not yet installed in the equipment.

(f) *Emission credits.* Replacement engines exempted under this section may not generate or use emission credits under the standard-setting part nor be part of any associated credit calculations.

TABLE 1 TO § 1068.240—ENGINE CATEGORIES AND SUBCATEGORIES FOR NEW REPLACEMENT ENGINES EXEMPTED WITHOUT TRACKING

Engine category	Standard-setting part [1]	Engine subcategories
Highway CI	40 CFR part 86	disp. < 0.6 L/cyl. 0.6 ≤ disp. < 1.2 L/cyl. disp. ≥ 1.2 L/cyl.
Nonroad CI, Stationary CI, and Marine CI	40 CFR part 1039, or 40 CFR part 1042	disp. < 0.6 L/cyl. 0.6 ≤ disp. < 1.2 L/cyl. 1.2 ≤ disp. < 2.5 L/cyl. 2.5 ≤ disp. < 7.0 L/cyl.
Marine SI	40 CFR part 1045	outboard. personal watercraft.
Large SI, Stationary SI, and Marine SI (sterndrive/inboard only).	40 CFR part 1048 or 40 CFR part 1045	all engines.
Recreational vehicles	40 CFR part 1051	off-highway motorcycle. all-terrain vehicle. snowmobile.
Small SI and Stationary SI	40 CFR part 1054	handheld. Class I. Class II.

[1] Include an engine as being subject to the identified standard-setting part if it will eventually be subject to emission standards under that part. For example, if you certify marine compression-ignition engines under part 94, count those as if they were already subject to part 1042.

[79 FR 7085, Feb. 6, 2014, as amended at 81 FR 74227, Oct. 25, 2016]

EFFECTIVE DATE NOTE: At 86 FR 34589, June 29, 2021, § 1068.240 was amended, effective July 29, 2021.

§ 1068.245 Temporary provisions addressing hardship due to unusual circumstances.

(a) After considering the circumstances, we may permit you to introduce into U.S. commerce engines/equipment that do not comply with emission-related requirements for a limited time if all the following conditions apply:

(1) Unusual circumstances that are clearly outside your control prevent you from meeting requirements from this chapter.

(2) You exercised prudent planning and were not able to avoid the violation; you have taken all reasonable steps to minimize the extent of the nonconformity.

(3) No other allowances are available under the regulations in this chapter to avoid the impending violation, including the provisions of § 1068.250.

(4) Not having the exemption will jeopardize the solvency of your company.

(b) If your unusual circumstances are only related to compliance with the model-year provisions of § 1068.103(f), we may grant hardship under this section without a demonstration that the solvency of your company is in jeopardy as follows:

(1) You must demonstrate that the conditions specified in paragraphs (a)(1) through (3) of this section apply.

(2) Your engines/equipment must comply with standards and other requirements that would have applied if assembly were completed on schedule.

(3) You may generally request this exemption only for engines/equipment for which assembly has been substantially completed; you may not begin assembly of any additional engines/equipment under this exemption after the cause for delay has occurred. We may make an exception to this general restriction for secondary engine manufacturers.

(4) As an example, if your normal production process involves purchase of

partially complete engines and a supplier fails to deliver all the ordered engines in time for your assembly according to your previously established schedule as a result of a fire at its factory, you may request that we treat those engine as if they had been completed on the original schedule. Note that we would grant relief only for those engines where you had a reasonable basis for expecting the engines to be delivered on time based on past performance and terms of purchase.

(c) To apply for an exemption, you must send the Designated Compliance Officer a written request as soon as possible before you are in violation. In your request, show that you meet all the conditions and requirements in paragraph (a) of this section.

(d) Include in your request a plan showing how you will meet all the applicable requirements as quickly as possible.

(e) You must give us other relevant information if we ask for it.

(f) We may include reasonable additional conditions on an approval granted under this section, including provisions to recover or otherwise address the lost environmental benefit or paying fees to offset any economic gain resulting from the exemption. For example, in the case of multiple tiers of emission standards, we may require that you meet the standards from the previous tier whether or not your hardship is granted under paragraph (b) of this section.

(g) Add a permanent label to all engines/equipment exempted under this section, consistent with § 1068.45, with at least the following items:

(1) The label heading ''EMISSION CONTROL INFORMATION''.

(2) Your corporate name and trademark.

(3) Engine displacement (in liters or cubic centimeters), and model year of the engine/equipment, (as applicable); or whom to contact for further information. We may also require that you include maximum engine power.

(4) A statement describing the engine's status as an exempted engine:

(i) If the engine/equipment does not meet any emission standards, add the following statement: ''THIS [engine, equipment, vehicle, etc.] IS EXEMPT UNDER 40 CFR 1068.245 FROM EMISSION STANDARDS AND RELATED REQUIREMENTS.''

(ii) If the engines/equipment meet alternate emission standards as a condition of an exemption under this section, we may specify a different statement to identify the alternate emission standards.

[73 FR 59344, Oct. 8, 2008, as amended at 81 FR 74228, Oct. 25, 2016]

§ 1068.250 Extending compliance deadlines for small businesses under hardship.

(a) After considering the circumstances, we may extend the compliance deadline for you to meet new or revised emission standards as long as you meet all the conditions and requirements in this section.

(b) You must be a small business to be eligible for this exemption.

(c) Send the Designated Compliance Officer a written request for an extension as soon as possible before you are in violation. In your request, show that all the following conditions and requirements apply:

(1) You have taken all possible business, technical, and economic steps to comply.

(i) In the case of importers of engines/equipment produced by other companies, show that you attempted to find a manufacturer capable of supplying complying products as soon as you became aware of the applicable requirements but were unable to do so.

(ii) For all other manufacturers, show that the burden of compliance costs prevents you from meeting the requirements of this chapter.

(2) Not having the exemption will jeopardize the solvency of your company.

(3) No other allowances are available under the regulations in this chapter to avoid the impending violation.

(d) In describing the steps you have taken to comply under paragraph (c)(1) of this section, include at least the following information:

(1) Describe your business plan, showing the range of projects active or under consideration.

(2) Describe your current and projected financial status, with and without the burden of complying fully with

the applicable regulations in this chapter.

(3) Describe your efforts to raise capital to comply with regulations in this chapter (this may not apply for importers).

(4) Identify the engineering and technical steps you have taken or those you plan to take to comply with regulations in this chapter.

(5) Identify the level of compliance you can achieve. For example, you may be able to produce engines/equipment that meet a somewhat less stringent emission standard than the regulations in this chapter require.

(e) Include in your request a plan showing how you will meet all the applicable requirements as quickly as possible.

(f) You must give us other relevant information if we ask for it.

(g) An authorized representative of your company must sign the request and include the statement: ''All the information in this request is true and accurate to the best of my knowledge.''

(h) [Reserved]

(j) We may approve extensions of the compliance deadlines as reasonable under the circumstances up to one model year at a time, and up to three years total.

(k) Add a permanent label to all engines/equipment exempted under this section, consistent with §1068.45, with at least the following items:

(1) The label heading ''EMISSION CONTROL INFORMATION''.

(2) Your corporate name and trademark.

(3) Engine displacement (in liters or cubic centimeters), and model year of the engine/equipment (as applicable); or whom to contact for further information. We may also require that you include maximum engine power.

(4) A statement describing the engine's status as an exempted engine:

(i) If the engine/equipment does not meet any emission standards, add the following statement:''THIS [engine, equipment, vehicle, etc.] IS EXEMPT UNDER 40 CFR 1068.250 FROM EMISSION STANDARDS AND RELATED REQUIREMENTS.''

(ii) If the engine/equipment meets alternate emission standards as a condition of an exemption under this section, we may specify a different statement to identify the alternate emission standards.

[73 FR 59344, Oct. 8, 2008, as amended at 81 FR 74228, Oct. 25, 2016]

§ 1068.255 Exempting engines and fuel-system components for hardship for equipment manufacturers and secondary engine manufacturers.

This section describes how, in unusual circumstances, we may approve an exemption to prevent hardship to an equipment manufacturer or a secondary engine manufacturer. This section does not apply to products that are subject to equipment-based exhaust emission standards.

(a) *Equipment exemption*. As an equipment manufacturer, you may ask for approval to produce exempted equipment for up to 12 months. We will generally limit this to a single interval up to 12 months in the first year that new or revised emission standards apply. Exemptions under this section are not limited to small businesses. Send the Designated Compliance Officer a written request for an exemption before you are in violation. In your request, you must show you are not at fault for the impending violation and that you would face serious economic hardship if we do not grant the exemption. This exemption is not available under this paragraph (a) if you manufacture the engine or fuel-system components you need for your own equipment, or if complying engines or fuel-system components are available from other manufacturers that could be used in your equipment, unless we allow it elsewhere in this chapter. We may impose other conditions, including provisions to use products meeting less stringent emission standards or to recover the lost environmental benefit. In determining whether to grant the exemptions, we will consider all relevant factors, including the following:

(1) The number of engines or fuel-system components involved.

(2) The size of your company and your ability to endure the hardship.

(3) The amount of time you had to redesign your equipment to accommodate complying products.

(4) Whether there was any breach of contract by a supplier.

(5) The potential for market disruption.

(b) *Engine and fuel-system component exemption.* As an engine manufacturer or fuel-system component manufacturer, you may produce nonconforming products for the equipment we exempt in paragraph (a) of this section. You do not have to request this exemption but you must have written assurance from equipment manufacturers that they need a certain number of exempted products under this section. Label engines or fuel-system components as follows, consistent with § 1068.45:

(1) *Engines.* Add a permanent label to all engines/equipment exempted under this section with at least the following items:

(i) The label heading ''EMISSION CONTROL INFORMATION''.

(ii) Your corporate name and trademark.

(iii) Engine displacement (in liters or cubic centimeters) and model year of the engine, or whom to contact for further information. We may also require that you include maximum engine power.

(iv) If the engine does not meet any emission standards: ''THIS ENGINE IS EXEMPT UNDER 40 CFR 1068.255 FROM EMISSION STANDARDS AND RELATED REQUIREMENTS.'' If the engine meets alternate emission standards as a condition of an exemption under this section, we may specify a different statement to identify the alternate emission standards.

(2) *Fuel-system components.* Add a permanent label to all engines/equipment exempted under this section with at least the following items:

(i) Your corporate name and trademark.

(ii) The statement ''EXEMPT UNDER 40 CFR 1068.255''.

(c) *Secondary engine manufacturers.* As a secondary engine manufacturer, you may ask for approval to produce exempted engines under this section for up to 12 months. We may require you to certify your engines to compliance levels above the emission standards that apply. For example, in the case of multiple tiers of emission standards, we may require you to meet the standards from the previous tier.

(1) The provisions in paragraph (a) of this section that apply to equipment manufacturers requesting an exemption apply equally to you except that you may manufacture the engines. Before we approve an exemption under this section, we will generally require that you commit to a plan to make up the lost environmental benefit.

(i) If you produce uncertified engines under this exemption, we will calculate the lost environmental benefit based on our best estimate of uncontrolled emission rates for your engines.

(ii) If you produce engines under this exemption that are certified to a compliance level less stringent than the emission standards that would otherwise apply, we will calculate the lost environmental benefit based on the compliance level you select for your engines.

(2) The labeling requirements in paragraph (b) of this section apply to your exempted engines; however, if you certify engines to specific compliance levels, state on the label the compliance levels that apply to each engine.

[73 FR 59344, Oct. 8, 2008, as amended at 81 FR 74228, Oct. 25, 2016]

§ 1068.260 General provisions for selling or shipping engines that are not yet in their certified configuration.

Except as specified in paragraph (e) of this section, all new engines in the United States are presumed to be subject to the prohibitions of § 1068.101, which generally require that all new engines be in a certified configuration before being sold, offered for sale, or introduced or delivered into commerce in the United States or imported into the United States. All emission-related components generally need to be installed on an engine for such an engine to be in its certified configuration. This section specifies clarifications and exemptions related to these requirements for engines. Except for paragraph (c) of this section, the provisions of this section generally apply for engine-based standards but not for equipment-based exhaust emission standards.

(a) The provisions of this paragraph (a) apply for emission-related components that cannot practically be assembled before shipment because they

depend on equipment design parameters.

(1) You do not need an exemption to ship an engine that does not include installation or assembly of certain emission-related components if those components are shipped along with the engine. For example, you may generally ship aftertreatment devices along with engines rather than installing them on the engine before shipment. We may require you to describe how you plan to use this provision.

(2) You may ask us at the time of certification for an exemption to allow you to ship your engines without emission-related components. If we allow this, we may specify conditions that we determine are needed to ensure that shipping the engine without such components will not result in the engine being operated outside of its certified configuration. You must identify unshipped parts by specific part numbers if they cannot be properly characterized by performance specification. For example, electronic control units, turbochargers, and EGR coolers must generally be identified by part number. Parts that we believe can be properly characterized by performance specification include air filters, noncatalyzed mufflers, and charge air coolers. See paragraph (d) of this section for additional provisions that apply in certain circumstances.

(b) You do not need an exemption to ship engines without specific components if they are not emission-related components identified in Appendix I of this part. For example, you may generally ship engines without the following parts:

(1) Radiators needed to cool the engine.

(2) Exhaust piping between the engine and an aftertreatment device, between two aftertreatment devices, or downstream of the last aftertreatment device.

(c) If you are a certificate holder, partially complete engines/equipment shipped between two of your facilities are exempt, subject to the provisions of this paragraph (c), as long as you maintain ownership and control of the engines/equipment until they reach their destination. We may also allow this where you do not maintain actual ownership and control of the engines/equipment (such as hiring a shipping company to transport the engines) but only if you demonstrate that the engines/equipment will be transported only according to your specifications. See §1068.261(b) for the provisions that apply instead of this paragraph (c) for the special case of integrated manufacturers using the delegated-assembly exemption. Notify us of your intent to use this exemption in your application for certification, if applicable. Your exemption is effective when we grant your certificate. You may alternatively request an exemption in a separate submission; for example, this would be necessary if you will not be the certificate holder for the engines in question. We may require you to take specific steps to ensure that such engines/equipment are in a certified configuration before reaching the ultimate purchaser. Note that since this is a temporary exemption, it does not allow you to sell or otherwise distribute to ultimate purchasers an engine/equipment in an uncertified configuration with respect to exhaust emissions. Note also that the exempted engine/equipment remains new and subject to emission standards (see definition of ''exempted'' in §1068.30) until its title is transferred to the ultimate purchaser or it otherwise ceases to be new.

(d) See §1068.261 for delegated-assembly provisions in which certificate-holding manufacturers ship engines that are not yet equipped with certain emission-related components. See §1068.262 for provisions related to manufacturers shipping partially complete engines for which a secondary engine manufacturer holds the certificate of conformity.

(e) Engines used in hobby vehicles are not presumed to be engines subject to the prohibitions of §1068.101. Hobby vehicles are reduced-scale models of vehicles that are not capable of transporting a person. Some gas turbine engines are subject to the prohibitions of §1068.101, but we do not presume that all gas turbine engines are subject to these prohibitions. Other engines that do not have a valid certificate of conformity or exemption when sold, offered for sale, or introduced or delivered into commerce in the United

States or imported into the United States are presumed to be engines subject to the prohibitions of § 1068.101 unless we determine that such engines are excluded from the prohibitions of § 1068.101.

(f) While we presume that new nonhobby engines are subject to the prohibitions of § 1068.101, we may determine that a specific engine is not subject to these prohibitions based on information you provide or other information that is available to us. For example, the provisions of this part 1068 and the standard-setting parts provide for exemptions in certain circumstances. Also, some engines may be subject to separate prohibitions under subchapter C instead of the prohibitions of § 1068.101.

[81 FR 74228, Oct. 25, 2016]

§ 1068.261 Delegated assembly and other provisions related to engines not yet in the certified configuration.

This section describes an exemption that allows certificate holders to sell or ship engines that are missing certain emission-related components if those components will be installed by an equipment manufacturer. This section does not apply to equipment subject to equipment-based standards. See the standard-setting part to determine whether and how the provisions of this section apply. (Note: See § 1068.262 for provisions related to manufacturers introducing into U.S. commerce partially complete engines for which someone else holds the certificate of conformity.) This exemption is temporary as described in paragraph (f) of this section.

(a) Shipping an engine separately from an aftertreatment component that you have specified as part of its certified configuration will not be a violation of the prohibitions in § 1068.101(a)(1) subject to the provisions in this section. We may also require that you apply some or all of the provisions of this section for other components if we determine it is necessary to ensure that shipping the engine without such components will not result in the engine being operated outside of its certified configuration. In making this determination, we will consider the importance of the component for controlling emissions and the likelihood that equipment manufacturers will have an incentive to disregard your emission-related installation instructions based on any relevant factors, such as the cost of the component and any real or perceived expectation of a negative impact on engine or equipment performance.

(b) If you manufacture engines and install them in equipment you also produce, you must take steps to ensure that your facilities, procedures, and production records are set up to ensure that equipment and engines are assembled in their proper certified configurations. For example, you may demonstrate compliance with the requirements of this section by maintaining a database showing how you pair aftertreatment components with the appropriate engines such that the final product is in its certified configuration.

(c) If you include the price of all aftertreatment components in the price of the engine and ship the aftertreatment components directly to the equipment manufacturer, or arrange for separate shipment by the component manufacturer to the equipment manufacturer, all the following conditions apply:

(1) Apply for and receive a certificate of conformity for the engine and its emission control system before shipment as described in the standard-setting part. For an existing certificate of conformity, amend the application for certification by describing your plans to use the provisions of this section as described in paragraph (c)(8) of this section.

(2) Provide installation instructions in enough detail to ensure that the engine will be in its certified configuration if someone follows these instructions. Provide the installation instructions in a timely manner, generally directly after you receive an order for shipping engines or earlier. If you apply removable labels as described in paragraph (c)(7)(i) of this section, include an instruction for the equipment manufacturer to remove the label after installing the appropriate aftertreatment component.

(3) Have a contractual agreement with the equipment manufacturer obligating the equipment manufacturer to complete the final assembly of the engine so it is in its certified configuration when final assembly is complete. This agreement must also obligate the equipment manufacturer to provide the affidavits required under paragraph (c)(4) of this section.

(4) Take appropriate additional steps to ensure that all engines will be in a certified configuration when installed by the equipment manufacturer. At a minimum, you must obtain annual affidavits from every equipment manufacturer to which you sell engines under this section. Include engines that you sell to distributors or dealers. The affidavits must list the part numbers of the aftertreatment devices that equipment manufacturers install on each engine they purchase from you under this section and include confirmation that the number of aftertreatment devices received were sufficient for the number of engines involved.

(5) [Reserved]

(6) Keep records to document how many engines you produce under this exemption. Also, keep records to document your contractual agreements under paragraph (c)(3) of this section. Keep all these records for five years after the end of the applicable model year and make them available to us upon request.

(7) Make sure the engine has the emission control information label we require under the standard-setting part. Include additional labeling using one of the following approaches:

(i) Apply an additional removable label in a way that makes it unlikely that the engine will be installed in equipment other than in its certified configuration. The label must identify the engine as incomplete and include a clear statement that failing to install the aftertreatment device, or otherwise failing to bring the engine into its certified configuration, is a violation of federal law subject to civil penalty.

(ii) Add the statement ''DELEGATED ASSEMBLY'' to the permanent emission control information label. You may alternatively add the abbreviated statement ''DEL ASSY'' if there is not enough room on the label.

(8) Describe the following things in your application for certification:

(i) How you plan to use the provisions of this section.

(ii) A detailed plan for auditing equipment manufacturers, as described in paragraph (d)(3) of this section, if applicable.

(iii) All other steps you plan to take under paragraph (c)(4) of this section.

(9) If one of your engines produced under this section is selected for production-line testing or a selective enforcement audit, you must arrange to get a randomly selected aftertreatment component from either the equipment manufacturer or the equipment manufacturer's supplier. You may keep an inventory of these randomly selected parts, consistent with good engineering judgment and the intent of this section. You may obtain such aftertreatment components from any point in the normal distribution from the aftertreatment component manufacturer to the equipment manufacturer. Keep records describing how you randomly selected these aftertreatment components, consistent with the requirements specified in the standard-setting part.

(10) Note that for purposes of importation, you may itemize your invoice to identify separate costs for engines and aftertreatment components that will be shipped separately. A copy of your invoice from the aftertreatment manufacturer may be needed to avoid payment of importation duties for the engine that also include the value of aftertreatment components.

(d) If you do not include the price of all aftertreatment components in the price of the engine, you must meet all the conditions described in paragraphs (c)(1) through (9) of this section, with the following additional provisions:

(1) The contractual agreement described in paragraph (c)(3) of this section must include a commitment that the equipment manufacturer will do the following things:

(i) Purchase the aftertreatment components you have specified in your application for certification and keep records to document these purchases.

(ii) Cooperate with the audits described in paragraph (d)(3) of this section.

(2) You must have written confirmation that the equipment manufacturer has ordered the appropriate type of aftertreatment components for an initial shipment of engines under this section. For the purpose of this paragraph (d)(2), initial shipment means the first shipment of engines that are subject to new or more stringent emissions standard (or the first shipment of engines using the provisions of this section) to a given equipment manufacturer for a given engine family. For the purpose of this paragraph (d)(2), you may treat as a single engine family those engine families from different model years that differ only with respect to model year or other characteristics unrelated to emissions. You must receive the written confirmation within 30 days after shipment. If you do not receive written confirmation within 30 days, you may not ship any more engines from that engine family to that equipment manufacturer until you have the written confirmation. Note that it may be appropriate to obtain subsequent written confirmations to ensure compliance with this section, as described in paragraph (c)(4) of this section.

(3) You must perform or arrange for audits of equipment manufacturers as follows:

(i) If you sell engines to 16 or more equipment manufacturers under the provisions of this section, you must annually perform or arrange for audits of four equipment manufacturers to whom you sell engines under this section. To select individual equipment manufacturers, divide all the affected equipment manufacturers into quartiles based on the number of engines they buy from you; select a single equipment manufacturer from each quartile each model year. Vary the equipment manufacturers selected for auditing from year to year, though you may repeat an audit in a later model year if you find or suspect that a particular equipment manufacturer is not properly installing aftertreatment devices.

(ii) If you sell engines to fewer than 16 equipment manufacturers under the provisions of this section, set up a plan to perform or arrange for audits of each equipment manufacturer on average once every four model years.

(iii) Starting with the 2019 model year, if you sell engines to fewer than 40 equipment manufacturers under the provisions of this section, you may ask us to approve a reduced auditing rate. We may approve an alternate plan that involves audits of each equipment manufacturer on average once every ten model years as long as you show that you have met the auditing requirements in preceding years without finding noncompliance or improper procedures.

(iv) To meet these audit requirements, you or your agent must at a minimum inspect the assembling companies' procedures and production records to monitor their compliance with your instructions, investigate some assembled engines, and confirm that the number of aftertreatment devices shipped were sufficient for the number of engines produced.

(v) You must keep records of these audits for five years after the end of the applicable model year.

(e) The following provisions apply if you ship engines without air filters or other portions of the air intake system that are specifically identified by part number (or other specific part reference) in the application for certification such that the shipped engine is not in its certified configuration. You do not need an exemption under this section to ship engines without air intake system components if you instead describe in your installation instructions how equipment manufacturers should use components meeting certain functional specifications.

(1) If you are using the provisions of this section to ship an engine without aftertreatment, apply all the provisions of this section to ensure that each engine, including its intake system, is in its certified configuration before it reaches the ultimate purchaser.

(2) If you are not using the provisions of this section to ship an engine without aftertreatment, shipping an engine without air-intake components that you have specified as part of its certified configuration will not be a violation of the prohibitions in §1068.101(a) if you follow the provisions specified in paragraph (b) or paragraphs (c)(1) through (9) of this section. If we find

there is a problem, we may require you to perform audits as specified in paragraph (d)(3) of this section.

(f) Once the equipment manufacturer takes possession of an engine exempted under this section and the engine reaches the point of final equipment assembly, the exemption expires and the engine is subject to all the prohibitions in §1068.101. Note that the engine's model year does not change based on the date the equipment manufacturer adds the aftertreatment device and/or air filter under this section.

(g) You may use the provisions of this section for engines you sell to a distributor as described in this paragraph (g) using one of the following approaches:

(1) You may sell engines through a distributor if you comply with the provisions of paragraph (d) of this section with respect to the equipment manufacturer.

(2) You may treat the distributor as the equipment manufacturer as described in this paragraph (g)(2) for all applicable requirements and prohibitions. Such distributors must bring engines into their final certified configuration. This may include shipping the engine with the appropriate aftertreatment device and/or air filter, but without completing the assembly with all the components. The exemptions expire for such engines when the distributor no longer has control of them.

(h) You must notify us within 15 days if you find from an audit or another source that engines produced under this section are not in a certified configuration at the point of final assembly or that an equipment manufacturer has otherwise failed to meet its obligations under this section. If this occurs, send us a report describing the circumstances related to the noncompliance within 75 days after you notify us.

(i) We may suspend, revoke, or void an exemption under this section, as follows:

(1) We may suspend or revoke your exemption for a specific equipment manufacturer if any of the engines are not in a certified configuration after installation in that manufacturer's equipment, or if we determine that the equipment manufacturer has otherwise failed to comply with the requirements of this section. We may also suspend or revoke your exemption for other engine families with respect to the equipment manufacturer unless you demonstrate that the noncompliance is limited to a specific engine family. You may not use this exemption for future shipments to the affected equipment manufacturer without taking action beyond the minimum steps specified in this section, such as performing on-site audits. We will approve further use of this exemption only if you convince us that you have adequately addressed the factors causing the noncompliance.

(2) We may suspend or revoke your exemption for the entire engine family if we determine that you have failed to comply with the requirements of this section. If we make an adverse decision with respect to the exemption for any of your engine families under this paragraph (i), this exemption will not apply for future certificates unless you convince us that the factors causing the noncompliance do not apply to the other engine families. We may also set additional conditions beyond the provisions specified in this section.

(3) We may void your exemption for the entire engine family if you intentionally submit false or incomplete information or fail to keep and provide to EPA the records required by this section. Note that all records and reports required under this section (whether generated by the engine manufacturer, equipment manufacturer, or others) are subject to the prohibition in §1068.101(a)(2), which prohibits the submission of false or incomplete information. For example, the affidavits required by this section are considered a submission.

(j) You are liable for the in-use compliance of any engine that is exempt under this section.

(k) It is a violation of §1068.101(a)(1) for any person to introduce into U.S. commerce a previously exempted engine, including as part of a piece of equipment, without complying fully with the installation instructions.

[73 FR 59344, Oct. 8, 2008, as amended at 75 FR 23064, Apr. 30, 2010; 81 FR 74229, Oct. 25, 2016]

§ 1068.262 Shipment of engines to secondary engine manufacturers.

This section specifies how manufacturers may introduce into U.S. commerce partially complete engines that have an exemption or a certificate of conformity held by a secondary engine manufacturer and are not yet in a certified configuration. See the standard-setting part to determine whether and how the provisions of this section apply. (Note: See § 1068.261 for provisions related to manufacturers introducing into U.S. commerce partially complete engines for which they hold the certificate of conformity.) This exemption is temporary as described in paragraph (g) of this section.

(a) The provisions of this section generally apply where the secondary engine manufacturer has substantial control over the design and assembly of emission controls. In unusual circumstances we may allow other secondary engine manufacturers to use these provisions. In determining whether a manufacturer has substantial control over the design and assembly of emission controls, we would consider the degree to which the secondary engine manufacturer would be able to ensure that the engine will conform to the regulations in its final configuration. Such secondary engine manufacturers may finish assembly of partially complete engines in the following cases:

(1) You obtain an engine that is not fully assembled with the intent to manufacture a complete engine.

(2) You obtain an engine with the intent to modify it before it reaches the ultimate purchaser.

(3) You obtain an engine with the intent to install it in equipment that will be subject to equipment-based standards.

(b) Manufacturers may introduce into U.S. commerce partially complete engines as described in this section if they have a written request for such engines from a secondary engine manufacturer that has certified the engine and will finish the engine assembly. The written request must include a statement that the secondary engine manufacturer has a certificate of conformity for the engine and identify a valid engine family name associated with each engine model ordered (or the basis for an exemption if applicable, as specified in paragraph (e) of this section). The original engine manufacturer must apply a removable label meeting the requirements of § 1068.45 that identifies the corporate name of the original manufacturer and states that the engine is exempt under the provisions of § 1068.262. The name of the certifying manufacturer must also be on the label or, alternatively, on the bill of lading that accompanies the engines during shipment. The original engine manufacturer may not apply a permanent emission control information label identifying the engine's eventual status as a certified engine.

(c) If you are the secondary engine manufacturer and you will hold the certificate, you must include the following information in your application for certification:

(1) Identify the original engine manufacturer of the partially complete engine or of the complete engine you will modify.

(2) Describe briefly how and where final assembly will be completed. Specify how you have the ability to ensure that the engines will conform to the regulations in their final configuration. (Note: Paragraph (a) of this section prohibits using the provisions of this section unless you have substantial control over the design and assembly of emission controls.)

(3) State unconditionally that you will not distribute the engines without conforming to all applicable regulations.

(d) If you are a secondary engine manufacturer and you are already a certificate holder for other families, you may receive shipment of partially complete engines after you apply for a certificate of conformity but before the certificate's effective date. In this case, all the provisions of § 1068.103(c)(1) through (3) apply. This exemption allows the original manufacturer to ship engines after you have applied for a certificate of conformity. Manufacturers may introduce into U.S. commerce partially complete engines as described in this paragraph (d) if they have a written request for such engines from a secondary engine manufacturer stating that the application for certification

has been submitted (instead of the information we specify in paragraph (b) of this section). We may set additional conditions under this paragraph (d) to prevent circumvention of regulatory requirements. Consistent with § 1068.103(c), we may also revoke an exemption under this paragraph (d) if we have reason to believe that the application for certification will not be approved or that the engines will otherwise not reach a certified configuration before reaching the ultimate purchaser. This may require that you export the engines.

(e) The provisions of this section also apply for shipping partially complete engines if the engine is covered by a valid exemption and there is no valid engine family name that could be used to represent the engine model. Unless we approve otherwise in advance, you may do this only when shipping engines to secondary engine manufacturers that are certificate holders. In this case, the secondary engine manufacturer must identify the regulatory cite identifying the applicable exemption instead of a valid engine family name when ordering engines from the original engine manufacturer.

(f) If secondary engine manufacturers determine after receiving an engine under this section that the engine will not be covered by a certificate or exemption as planned, they may ask us to allow for shipment of the engines back to the original engine manufacturer or to another secondary engine manufacturer. This might occur in the case of an incorrect shipment or excess inventory. We may modify the provisions of this section as appropriate to address these cases.

(g) Both original and secondary engine manufacturers must keep the records described in this section for at least five years, including the written request for engines and the bill of lading for each shipment (if applicable). The written request is deemed to be a submission to EPA and is thus subject to the reporting requirements of § 1068.101(a)(2).

(h) These provisions are intended only to allow secondary engine manufacturers to obtain or transport engines in the specific circumstances identified in this section so any exemption under this section expires when the engine reaches the point of final assembly identified in paragraph (c)(2) of this section.

(i) For purposes of this section, an allowance to introduce partially complete engines into U.S. commerce includes a conditional allowance to sell, introduce, or deliver such engines into commerce in the United States or import them into the United States. It does not include a general allowance to offer such partially complete engines for sale because this exemption is intended to apply only for cases in which the certificate holder already has an arrangement to purchase the engines from the original engine manufacturer. This exemption does not allow the original engine manufacturer to subsequently offer the engines for sale to a different manufacturer who will hold the certificate unless that second manufacturer has also complied with the requirements of this part. The exemption does not apply for any individual engines that are not labeled as specified in this section or which are shipped to someone who is not a certificate holder.

(j) We may suspend, revoke, or void an exemption under this section, as follows:

(1) We may suspend or revoke your exemption if you fail to meet the requirements of this section. We may suspend or revoke an exemption related to a specific secondary engine manufacturer if that manufacturer sells engines that are in not in a certified configuration in violation of the regulations. We may disallow this exemption for future shipments to the affected secondary engine manufacturer or set additional conditions to ensure that engines will be assembled in the certified configuration.

(2) We may void an exemption for all the affected engines if you intentionally submit false or incomplete information or fail to keep and provide to EPA the records required by this section.

(3) The exemption is void for an engine that is shipped to a company that

is not a certificate holder or for an engine that is shipped to a secondary engine manufacturer that is not in compliance with the requirements of this section.

(4) The secondary engine manufacturer may be liable for causing a prohibited act if voiding the exemption is due to its own actions.

(k) No exemption is needed to import equipment that does not include an engine. No exemption from exhaust emission standards is available under this section for equipment subject to equipment-based standards if the engine has been installed.

[81 FR 74229, Oct. 25, 2016]

§ 1068.265 Provisions for engines/equipment conditionally exempted from certification.

In some cases, exempted engines may need to meet alternate emission standards as a condition of the exemption. For example, replacement engines exempted under § 1068.240 in many cases need to meet the same standards as the engines they are replacing. The standard-setting part may similarly exempt engines/equipment from all certification requirements, or allow us to exempt engines/equipment from all certification requirements for certain cases, but require the engines/equipment to meet alternate standards. In these cases, all the following provisions apply:

(a) Your engines/equipment must meet the alternate standards we specify in (or pursuant to) the exemption section, and all other requirements applicable to engines/equipment that are subject to such standards.

(b) You need not apply for and receive a certificate for the exempt engines/equipment. However, you must comply with all the requirements and obligations that would apply to the engines/equipment if you had received a certificate of conformity for them unless we specifically waive certain requirements.

(c) You must have emission data from test engines/equipment using the appropriate procedures that demonstrate compliance with the alternate standards unless the engines/equipment are identical in all material respects to engines/equipment that you have previously certified to standards that are the same as, or more stringent than, the alternate standards. Note that ''engines/equipment that you have previously certified'' does not include any engines/equipment initially covered by a certificate that was later voided or otherwise invalidated, or engines/equipment that we have determined did not fully conform to the regulations.

(d) See the provisions of the applicable exemption for labeling instructions, including those related to the compliance statement and other modifications to the label otherwise required in the standard-setting part. If we do not identify specific labeling requirements for an exempted engine, you must meet the labeling requirements in the standard-setting part, with the following exceptions:

(1) Modify the family designation by eliminating the character that identifies the model year.

(2) We may also specify alternative language to replace the compliance statement otherwise required in the standard-setting part.

(e) You may not generate emission credits for averaging, banking, or trading with engines/equipment meeting requirements under the provisions of this section.

(f) Keep records to show that you meet the alternate standards as follows:

(1) If your exempted engines/equipment are identical to previously certified engines/equipment, keep your most recent application for certification for the certified family.

(2) If you previously certified a similar family, but have modified the exempted engines/equipment in a way that changes them from their previously certified configuration, keep your most recent application for certification for the certified family, a description of the relevant changes, and any test data or engineering evaluations that support your conclusions.

(3) If you have not previously certified a similar family, keep all the records we specify for the application for certification and any additional records the standard-setting part requires you to keep.

(g) We may require you to send us an annual report of the engines/equipment you produce under this section.

Subpart D—Imports

§ 1068.301 General provisions for importing engines/equipment.

(a) This subpart applies to you if you import into the United States engines or equipment subject to EPA emission standards or equipment containing engines subject to EPA emission standards.

(b) In general, engines/equipment that you import must be covered by a certificate of conformity unless they were built before emission standards started to apply. This subpart describes the limited cases where we allow importation of exempt or excluded engines/equipment. If an engine has an exemption from exhaust emission standards, this allows you to import the equipment under the same exemption.

(c) U.S. Customs and Border Protection may prevent you from importing engines or equipment if you do not meet the requirements of this subpart. In addition, U.S. Customs and Border Protection regulations may contain other requirements for engines/equipment imported into the United States (see 19 CFR Chapter I).

(d) Complete the appropriate EPA declaration before importing any engines or equipment. These forms may be submitted and stored electronically and are available on the Internet at *http://www.epa.gov/OTAQ/imports/* or by phone at 734–214–4100. Importers must keep these records for five years and make them available promptly upon request.

(e) The standard-setting part may define uncertified engines/equipment to be ''new'' upon importation, whether or not they have already been placed into service. This may affect how the provisions of this subpart apply for your engines/equipment. (See the definition of ''new'' and other relevant terms in the standard-setting part.)

[73 FR 59344, Oct. 8, 2008, as amended at 81 FR 74231, Oct. 25, 2016]

§ 1068.305 How do I get an exemption or exclusion for imported engines/equipment?

(a) You must meet the requirements of the specific exemption or exclusion you intend to use, including any labeling requirements that apply, and complete the appropriate declaration form described in § 1068.301(d).

(b) If we ask for it, prepare a written request in which you do the following:

(1) Give your name, address, and telephone number.

(2) Give the engine/equipment owner's name, address, and telephone number.

(3) Identify the make, model, identification number, and original production year of all engines/equipment.

(4) Identify which exemption or exclusion in this subpart allows you to import nonconforming engines/equipment and describe how your engine/equipment qualifies.

(5) Tell us where you will keep your engines/equipment if you might need to store them until we approve your request.

(6) Authorize us to inspect or test your engines/equipment as the Clean Air Act allows.

(c) We may ask for more information.

(d) You may import the nonconforming engines/equipment you identify in your request if you get prior written approval from us. U.S. Customs and Border Protection may require you to present the approval letter. We may temporarily or permanently approve the exemptions or exclusions, as described in this subpart.

[73 FR 59344, Oct. 8, 2008, as amended at 81 FR 74231, Oct. 25, 2016]

§ 1068.310 Exclusions for imported engines/equipment.

If you show us that your engines/equipment qualify under one of the paragraphs of this section, we will approve your request to import such excluded engines/equipment. You must have our approval before importing engines/equipment under paragraph (a) of this section. You may, but are not required to request our approval to import the engines/equipment under paragraph (b) through (c) of this section. The following engines/equipment are excluded:

(a) *Nonroad engines/equipment used solely for competition.* Nonroad engines/equipment that you demonstrate will be used solely for competition are excluded from the restrictions on imports in § 1068.301(b), but only if they are properly labeled. See the standard-setting part for provisions related to this demonstration that may apply. Section 1068.101(b)(4) prohibits anyone from using these excluded engines/equipment for purposes other than competition. We may waive the labeling requirement or allow a removable label for engines/equipment that are being temporarily imported for one or more specific competition events.

(b) *Stationary engines.* The definition of nonroad engine in § 1068.30 does not include certain engines used in stationary applications. Such engines (and equipment containing such engines) may be subject to the standards of 40 CFR part 60. Engines that are excluded from the definition of nonroad engine in this part and are not required to be certified to standards under 40 CFR part 60 are not subject to the restrictions on imports in § 1068.301(b), but only if they are properly labeled and there is clear and convincing evidence that each engine will be used in a stationary application (see paragraph (2)(iii) of the definition of ''Nonroad engine''). Section 1068.101 restricts the use of stationary engines for non-stationary purposes unless they are certified under 40 CFR part 60 to the same standards that would apply to nonroad engines for the same model year.

(c) *Hobby engines.* The standard-setting parts exclude engines used in reduced-scale models of vehicles that are not capable of transporting a person.

(d) *Other engines/equipment.* The standard-setting parts may exclude engines/equipment used in certain applications. For example, engines used in aircraft are generally excluded. Engines/equipment used in underground mining are excluded if they are regulated by the Mine Safety and Health Administration.

(e) *Labeling.* For engines/equipment imported under paragraph (a) or (b) of this section, you must add a permanent label, consistent with § 1068.45, with at least the following items unless the standard-setting part includes other specific labeling requirements or we approve alternate label language that is more accurate for your engine/equipment:

(1) Include the heading ''EMISSION CONTROL INFORMATION''.

(2) Include your full corporate name and trademark.

(3) State the engine displacement (in liters or cubic centimeters). We may also require that you include maximum engine power. If the engine's power is not established, state the approximate power.

(4) State: ''THIS ENGINE IS EXEMPT FROM THE REQUIREMENTS OF [identify the part referenced in § 1068.1(a) that would otherwise apply], AS PROVIDED IN [identify the paragraph authorizing the exemption (for example, ''40 CFR 1068.315(a)'')]. INSTALLING THIS ENGINE IN ANY DIFFERENT APPLICATION MAY BE A VIOLATION OF FEDERAL LAW SUBJECT TO CIVIL PENALTY.''

[73 FR 59344, Oct. 8, 2008, as amended at 81 FR 74231, Oct. 25, 2016]

§ 1068.315 Permanent exemptions for imported engines/equipment.

We may approve a permanent exemption from the restrictions on imports under § 1068.301(b) under the following conditions:

(a) *National security exemption.* You may import an engine or piece of equipment under the national security exemption in § 1068.225, but only if it is properly labeled.

(b) *Manufacturer-owned engine/equipment exemption.* You may import manufacturer-owned engines/equipment, as described in § 1068.215.

(c) *Replacement engine exemption.* You may import a nonconforming replacement engine as described in § 1068.240. To use this exemption, you must be a certificate holder for a family we regulate under the same part as the replacement engine.

(d) *Extraordinary circumstances exemption.* You may import a nonconforming engine or piece of equipment if we grant hardship relief as described in § 1068.245.

(e) *Small-volume manufacturer exemption.* You may import a nonconforming engine or piece of equipment if we

grant hardship relief for a small-volume manufacturer, as described in § 1068.250.

(f) *Equipment-manufacturer hardship exemption*. You may import a nonconforming engine if we grant an exemption for the transition to new or revised emission standards, as described in § 1068.255.

(g) [Reserved]

(h) *Identical configuration exemption*. Unless specified otherwise in the standard-setting part, you may import nonconforming engines/equipment if they are identical to certified engines/equipment produced by the same manufacturer, subject to the following provisions:

(1) You must meet all the following criteria:

(i) You have owned the engines/equipment for at least six months.

(ii) You agree not to sell, lease, donate, trade, or otherwise transfer ownership of the engines/equipment for at least five years. During this period, the only acceptable way to dispose of the engines/equipment is to destroy or export them.

(iii) You use data or evidence sufficient to show that the engines/equipment are in a configuration that is identical to engines/equipment the original manufacturer has certified to meet emission standards that apply at the time the manufacturer finished assembling or modifying the engines/equipment in question. If you modify the engines/equipment to make them identical, you must completely follow the original manufacturer's written instructions.

(2) We will tell you in writing if we find the information insufficient to show that the engines/equipment are eligible for this exemption. In this case, we will not consider your request further until you address our concerns.

(i) *Ancient engine/equipment exemption*. If you are not the original engine/equipment manufacturer, you may import nonconforming engines/equipment that are subject to a standard-setting part and were first manufactured at least 21 years earlier, as long as they are still substantially in their original configurations.

[73 FR 59344, Oct. 8, 2008, as amended at 81 FR 74231, Oct. 25, 2016]

§ 1068.325 Temporary exemptions for imported engines/equipment.

You may import engines/equipment under certain temporary exemptions, subject to the conditions in this section. We may ask U.S. Customs and Border Protection to require a specific bond amount to make sure you comply with the requirements of this subpart. You may not sell or lease one of these engines/equipment while it is in the United States except as specified in this section or § 1068.201(i). You must eventually export the engine/equipment as we describe in this section unless it conforms to a certificate of conformity or it qualifies for one of the permanent exemptions in § 1068.315 or the standard-setting part.

(a) *Exemption for repairs or alterations*. You may temporarily import nonconforming engines/equipment under bond solely for repair or alteration, subject to our advance approval as described in paragraph (j) of this section. You may operate the engine/equipment in the United States only as necessary to repair it, alter it, or ship it to or from the service location. Export the engine/equipment directly after servicing is complete, or confirm that it has been destroyed.

(b) *Testing exemption*. You may temporarily import nonconforming engines/equipment under bond for testing if you follow the requirements of § 1068.210, subject to our advance approval as described in paragraph (j) of this section. You may operate the engines/equipment in the United States only as needed to perform tests. This exemption expires one year after you import the engine/equipment unless we approve an extension. The engine/equipment must be exported before the exemption expires. You may sell or lease the engines/equipment consistent with the provisions of § 1068.210.

(c) *Display exemption*. You may temporarily import nonconforming engines/equipment under bond for display if you follow the requirements of § 1068.220, subject to our advance approval as described in paragraph (j) of this section. This exemption expires one year after you import the engine/equipment, unless we approve your request for an extension. The engine/

equipment must be exported (or destroyed) by the time the exemption expires or directly after the display concludes, whichever comes first.

(d) *Export exemption*. You may temporarily import nonconforming engines/equipment to export them, as described in § 1068.230. Label the engine/equipment as described in § 1068.230. You may sell or lease the engines/equipment for operation outside the United States consistent with the provisions of § 1068.230.

(e) *Diplomatic or military exemption*. You may temporarily import nonconforming engines/equipment without bond if you represent a foreign government in a diplomatic or military capacity. In your request to the Designated Compliance Officer (see § 1068.305), include either written confirmation from the U.S. State Department that you qualify for this exemption or a copy of your orders for military duty in the United States. We will rely on the State Department or your military orders to determine when your diplomatic or military status expires, at which time you must export your exempt engines/equipment.

(f) *Delegated-assembly exemption*. You may import a nonconforming engine for final assembly under the provisions of § 1068.261. You may sell or lease the engines/equipment consistent with the provisions of § 1068.261.

(g) *Exemption for partially complete engines*. You may import an engine if another company already has a certificate of conformity and will be modifying the engine to be in its final certified configuration or a final exempt configuration under the provisions of § 1068.262. You may also import a partially complete engine by shipping it from one of your facilities to another under the provisions of § 1068.260(c). If you are importing a used engine that becomes new as a result of importation, you must meet all the requirements that apply to original engine manufacturers under § 1068.262. You may sell or lease the engines consistent with the provisions of § 1068.262.

(h)–(i) [Reserved]

(j) *Approvals*. For the exemptions in this section requiring our approval, you must send a request to the Designated Compliance Officer before importing the engines/equipment. We will approve your request if you meet all the applicable requirements and conditions. If another section separately requires that you request approval for the exemption, you may combine the information requirements in a single request. Include the following information in your request:

(1) Identify the importer of the engine/equipment and the applicable postal address, e-mail address, and telephone number.

(2) Identify the engine/equipment owner and the applicable postal address, e-mail address, and telephone number.

(3) Identify the engine/equipment by model number (or name), serial number, and original production year.

(4) Identify the specific regulatory provision under which you are seeking an exemption.

(5) Acknowledge that EPA enforcement officers may conduct inspections or testing as allowed under the Clean Air Act.

(6) Include any additional information we specify for demonstrating that you qualify for the exemption.

[76 FR 57489, Sept. 15, 2011; 81 FR 74231, Oct. 25, 2016]

§ 1068.335 Penalties for violations.

(a) *All imported engines/equipment*. Unless you comply with the provisions of this subpart, importation of nonconforming engines/equipment violates sections 203 and 213(d) of the Clean Air Act (42 U.S.C. 7522 and 7547(d)). You may then have to export the engines/equipment, pay civil penalties, or both. U.S. Customs and Border Protection may seize unlawfully imported engines and equipment.

(b) *Temporarily imported engines/equipment*. If you do not comply with the provisions of this subpart for a temporary exemption under § 1068.325, you may forfeit the total amount of the bond in addition to the sanctions we identify in paragraph (a) of this section. We will consider an engine or piece of equipment to be exported if it has been destroyed or delivered to U.S. Customs and Border Protection for export or other disposition under applicable Customs laws and regulations. EPA or U.S. Customs and Border Protection

may offer you a grace period to allow you to export temporarily exempted engines/equipment without penalty after the exemption expires.

§ 1068.360 Restrictions for assigning a model year to imported engines and equipment.

This section includes limitations on assigning a model year to engines and equipment that are imported in a year later than the model year in which they were manufactured, except as specified in paragraph (e) of this section.

(a) The term ''model year'' is defined in each of the standard-setting parts. These definitions may vary slightly to address the different categories of engines and equipment. Except as specified in paragraphs (b) and (c) of this section, the emission standards and other emission-related requirements that apply for an imported engine or piece of equipment are determined by the model year as defined in the applicable standard-setting part and the provisions of 40 CFR 1068.105(a).

(b) This paragraph (b) applies for the importation of engines and equipment that have not been placed into service, where the importation occurs in any calendar year that is more than one year after the named model year of the engine or equipment when emission control requirements applying to current engines are different than for engines or equipment in the named model year, unless they are imported under special provisions for Independent Commercial Importers as allowed under the standard-setting part. Regardless of what other provisions of this subchapter U specify for the model year of the engine or equipment, such engines and equipment are deemed to have an applicable model year no more than one year earlier than the calendar year in which they are imported. For example, a new engine identified as a 2007 model-year product that is imported on January 31, 2010 will be treated as a 2009 model-year engine; the same engine will be treated as a 2010 model-year engine if it is imported any time in calendar year 2011.

(c) If you claim that an engine or piece of equipment is not subject to standards—or is subject to standards less stringent than those currently in place—based on its original manufacture date because it has already been placed into service, you must provide clear and convincing evidence that it has already been placed into service. Such evidence must generally include, but not be limited to, documentary evidence of purchase and maintenance history and visible wear that is consistent with the reported manufacture date. Importing products for resale or importing more than one engine or piece of equipment at a time would generally require a greater degree of evidence under this paragraph (c). If you do not satisfactorily demonstrate that the engine or equipment has already been placed into service, the provisions of paragraph (b) of this section apply.

(d) Nothing in this section should be interpreted to allow circumvention of the requirements of this part by misstating or mis-labeling the model year of engines or equipment. For example, this section does not permit engines imported in the same year that they are manufactured to be treated as an engine manufactured in the previous year. To verify compliance with the provisions of this section, we may require you to verify the original manufacture date of the engine or equipment based on manufacturing records, title-transfer documents, service records, or other documentation.

(e) If all the current emission control requirements are the same as in the named model year, the provisions of this section do not apply.

[73 FR 59344, Oct. 8, 2008, as amended at 81 FR 74232, Oct. 25, 2016]

Subpart E—Selective Enforcement Auditing

§ 1068.401 What is a selective enforcement audit?

(a) We may conduct or require you as a certificate holder to conduct emission tests on production engines/equipment in a selective enforcement audit. This requirement is independent of any requirement for you to routinely test production-line engines/equipment. Where there are multiple entities meeting the definition of manufacturer, we may require manufacturers other than the certificate holder to

conduct or participate in the audit as necessary. For products subject to equipment-based standards, but tested using engine-based test procedures, this subpart applies to the engines and/or the equipment, as applicable. Otherwise this subpart applies to engines for products subject to engine-based standards and to equipment for products subject to equipment-based standards.

(b) If we send you a signed test order, you must follow its directions and the provisions of this subpart. We may tell you where to test the engines/equipment. This may be where you produce the engines/equipment or any other emission testing facility. You are responsible for all testing costs whether the testing is conducted at your facility or another facility.

(c) If we select one or more of your families for a selective enforcement audit, we will send the test order to the person who signed the application for certification or we will deliver it in person.

(d) If we do not select a testing facility, notify the Designated Compliance Officer within one working day of receiving the test order where you will test your engines/equipment.

(e) You must do everything we require in the audit without delay. We may suspend or revoke your certificate of conformity for the affected engine families if you do not fulfill your obligations under this subpart.

[81 FR 74232, Oct. 25, 2016]

§ 1068.405 What is in a test order?

(a) In the test order, we will specify the following things:

(1) The family we have identified for testing. We may also specify individual configurations.

(2) The engine/equipment assembly plant, storage facility, or (if you import the engines/equipment) port facility from which you must select engines/equipment.

(3) The procedure for selecting engines/equipment for testing, including a selection rate.

(4) The test procedures, duty cycles, and test points, as appropriate, for testing the engines/equipment to show that they meet emission standards.

(b) We may state that we will select the test engines/equipment.

(c) We may identify alternate families or configurations for testing in case we determine the intended engines/equipment are not available for testing or if you do not produce enough engines/equipment to meet the minimum rate for selecting test engines/equipment.

(d) We may include other directions or information in the test order.

(e) We may ask you to show us that you meet any additional requirements that apply to your engines/equipment (closed crankcases, for example).

(f) In anticipation of a potential audit, you may give us a list of your preferred families and the corresponding assembly plants, storage facilities, or (if you import the engines/equipment) port facilities from which we should select engines/equipment for testing. The information would apply only for a single model year so it would be best to include this information in your application for certification. If you give us this list before we issue a test order, we will consider your recommendations, but we may select different engines/equipment.

(g) If you also do routine production-line testing with the selected family in the same time period, the test order will tell you what changes you might need to make in your production-line testing schedule.

[73 FR 59344, Oct. 8, 2008, as amended at 81 FR 74132, Oct. 25, 2016]

§ 1068.410 How must I select and prepare my engines/equipment?

(a) *Selecting engines/equipment.* Select engines/equipment as described in the test order. If you are unable to select test engines/equipment this way, you may ask us to approve an alternate plan as long as you make the request before you start selecting engines/equipment.

(b) *Assembling engines/equipment.* Produce and assemble test engines/equipment using your normal production and assembly process for that family.

(1) Notify us directly if you make any change in your production, assembly, or quality control processes that might affect emissions between the time you receive the test order and the time you

finish selecting test engines/equipment.

(2) If you do not fully assemble engines/equipment at the specified location, we will describe in the test order how to select components to finish assembling the engines/equipment. Assemble these components onto the test engines/equipment using your documented assembly and quality control procedures.

(c) *Modifying engines/equipment.* Once an engine or piece of equipment is selected for testing, you may adjust, repair, prepare, or modify it or check its emissions only if one of the following is true:

(1) You document the need for doing so in your procedures for assembling and inspecting all your production engines/equipment and make the action routine for all the engines/equipment in the family.

(2) This subpart otherwise allows your action.

(3) We approve your action in advance.

(d) *Engine/equipment malfunction.* If an engine/equipment malfunction prevents further emission testing, ask us to approve your decision to either repair the engine or delete it from the test sequence.

(e) *Setting adjustable parameters.* Before any test, we may adjust or require you to adjust any adjustable parameter to any setting within its physically adjustable range.

(1) [Reserved]

(2) We may make or specify adjustments within the physically adjustable range by considering their effect on emission levels. We may also consider how likely it is that someone will make such an adjustment with in-use engines/equipment.

(f) *Stabilizing emission levels.* (1) Before you test production-line engines/equipment for exhaust emission, you may operate the engine/equipment to stabilize the exhaust emission levels. Using good engineering judgment, operate your engines/equipment in a way that represents the way production engines/equipment will be used. You may operate each engine or piece of equipment for no more than the greater of two periods:

(i) 50 hours.

(ii) The number of hours you operated your emission-data engine/equipment for certifying the family (see 40 CFR part 1065, subpart E).

(2) Use good engineering judgment and follow the standard-setting part to stabilize equipment for evaporative emissions, where appropriate.

(g) *Damage during shipment.* If shipping the engine/equipment to a remote facility for testing under a selective enforcement audit makes necessary an adjustment or repair, you must wait until after the initial emission test to do this work. We may waive this requirement if the test would be impossible or unsafe or if it would permanently damage the engine/equipment. Report to us, in your written report under § 1068.450, all adjustments or repairs you make on test engines/equipment before each test.

(h) *Shipping engines/equipment.* If you need to ship engines/equipment to another facility for testing, make sure the test engines/equipment arrive at the test facility within 24 hours after being selected. You may ask that we allow more time if you are unable to do this.

(i) *Retesting after invalid tests.* You may retest an engine or piece of equipment if you determine an emission test is invalid under the standard-setting part. Explain in your written report reasons for invalidating any test and the emission results from all tests. If you retest an engine or piece of equipment and, within ten days after testing, ask to substitute results of the new tests for the original ones, we will answer within ten days after we receive your information.

(j) *Retesting after reaching a fail decision.* You may retest your engines/equipment once a fail decision for the audit has been reached based on the first test on each engine or piece of equipment under § 1068.420(c). You may test each engine or piece of equipment up to a total of three times, but you must perform the same number of tests on each engine or piece of equipment. You may further operate the engine/equipment to stabilize emission levels before testing, subject to the provisions of paragraph (f) of this section. We may approve retesting at other

times if you send us a request with satisfactory justification.

[73 FR 59344, Oct. 8, 2008, as amended at 75 FR 23064, Apr. 30, 2010]

§ 1068.415 How do I test my engines/equipment?

(a) Use the test procedures specified in the standard-setting part for showing that your engines/equipment meet emission standards. The test order will give further testing instructions.

(b) If no test cells are available at a given facility, you may make alternate testing arrangements with our approval.

(c) Test at least two engines/equipment in each 24-hour period (including void tests). However, for engines with maximum engine power above 560 kW, you may test one engine per 24-hour period. If you request and justify it, we may approve a lower testing rate.

(d) For exhaust emissions, accumulate service on test engines/equipment at a minimum rate of 6 hours per engine or piece of equipment during each 24-hour period; however, service accumulation to stabilize an engine's emission levels may not take longer than eight days. The first 24-hour period for service accumulation begins when you finish preparing an engine or piece of equipment for testing. The minimum service accumulation rate does not apply on weekends or holidays. We may approve a longer stabilization period or a lower service accumulation rate if you request and justify it. We may require you to accumulate hours more rapidly than the minimum rate, as appropriate. Plan your service accumulation to allow testing at the rate specified in paragraph (c) of this section. Select operation for accumulating operating hours on your test engines/equipment to represent normal in-use operation for the family.

(e) Test engines/equipment in the same order you select them.

[73 FR 59344, Oct. 8, 2008, as amended at 81 FR 74232, Oct. 25, 2016]

§ 1068.420 How do I know when my engine family fails an SEA?

(a) A failed engine or piece of equipment is one whose final deteriorated test results exceed an applicable emission standard for any regulated pollutant.

(b) Continue testing engines/equipment until you reach a pass decision for all pollutants or a fail decision for one pollutant, as described in paragraph (c) of this section.

(c) You reach a pass decision for the SEA requirements when the number of failed engines/equipment is less than or equal to the pass decision number in Appendix A to this subpart for the total number of engines/equipment tested. You reach a fail decision for the SEA requirements when the number of failed engines/equipment is greater than or equal to the fail decision number in Appendix A to this subpart for the total number of engines/equipment you test. An acceptable quality level of 40 percent is the basis for the pass or fail decision.

(d) Consider test results in the same order as the engine/equipment testing sequence.

(e) If you reach a pass decision for one pollutant, but need to continue testing for another pollutant, we will not use these later test results for the pollutant with the pass decision as part of the SEA.

(f) Appendix A to this subpart lists multiple sampling plans. Use the sampling plan for the projected sales volume you reported in your application for the audited family.

(g) We may choose to stop testing after any number of tests.

(h) If we test some of your engines/equipment in addition to your own testing, we may decide not to include your test results as official data for those engines/equipment if there is substantial disagreement between your testing and our testing. We will reinstate your data as valid if you show us that we made an error and your data are correct.

(i) If we rely on our test data instead of yours, we will notify you in writing of our decision and the reasons we believe your facility is not appropriate for doing the tests we require under this subpart. You may request in writing that we consider your test results

from the same facility for future testing if you show us that you have made changes to resolve the problem.

[73 FR 59344, Oct. 8, 2008, as amended at 81 FR 74232, Oct. 25, 2016]

§ 1068.425 What happens if one of my production-line engines/equipment exceeds the emission standards?

(a) If one of your production-line engines/equipment fails to meet one or more emission standards (see § 1068.420), the certificate of conformity is automatically suspended for that engine or piece of equipment. You must take the following actions before your certificate of conformity can cover that engine or piece of equipment:

(1) Correct the problem and retest the engine/equipment to show it complies with all emission standards.

(2) Include in your written report a description of the test results and the remedy for each engine or piece of equipment (see § 1068.450).

(b) You may ask for a hearing relative to the suspended certificate of conformity for the failing engine/equipment as specified in subpart G of this part.

[73 FR 59344, Oct. 8, 2008, as amended at 81 FR 74232, Oct. 25, 2016]

§ 1068.430 What happens if a family fails an SEA?

(a) We may suspend your certificate of conformity for a family if it fails the SEA under § 1068.420. The suspension may apply to all facilities producing engines/equipment from a family even if you find noncompliant engines/equipment only at one facility.

(b) We will tell you in writing if we suspend your certificate in whole or in part. We will not suspend a certificate until at least 15 days after the family fails the SEA. The suspension is effective when you receive our notice.

(c) You may ask for a hearing as described in subpart G of this part up to 15 days after we suspend the certificate for a family. If we agree that we used erroneous information in deciding to suspend the certificate before a hearing is held, we will reinstate the certificate.

[73 FR 59344, Oct. 8, 2008, as amended at 81 FR 74232, Oct. 25, 2016]

§ 1068.435 May I sell engines/equipment from a family with a suspended certificate of conformity?

You may sell engines/equipment that you produce after we suspend the family's certificate of conformity only if one of the following occurs:

(a) You test each engine or piece of equipment you produce and show it complies with emission standards that apply.

(b) We conditionally reinstate the certificate for the family. We may do so if you agree to recall all the affected engines/equipment and remedy any noncompliance at no expense to the owner if later testing shows that engines/equipment in the family still do not comply.

§ 1068.440 How do I ask EPA to reinstate my suspended certificate?

(a) Send us a written report asking us to reinstate your suspended certificate. In your report, identify the reason for the SEA failure, propose a remedy, and commit to a date for carrying it out. In your proposed remedy include any quality control measures you propose to keep the problem from happening again.

(b) Give us test data from production engines/equipment showing that engines/equipment in the remedied family comply with all the emission standards that apply.

[73 FR 59344, Oct. 8, 2008, as amended at 75 FR 23064, Apr. 30, 2010]

§ 1068.445 When may EPA revoke my certificate under this subpart and how may I sell these engines/equipment again?

(a) We may revoke your certificate for a family in the following cases:

(1) You do not meet the reporting requirements under this subpart.

(2) Your family fails an SEA and your proposed remedy to address a suspended certificate is inadequate to solve the problem or requires you to change the engine/equipment's design or emission control system.

(b) To sell engines/equipment from a family with a revoked certificate of conformity, you must modify the family and then show it complies with the applicable requirements.

(1) If we determine your proposed design change may not control emissions for the engine/equipment's full useful life, we will tell you within five working days after receiving your report. In this case we will decide whether production-line testing will be enough for us to evaluate the change or whether you need to do more testing.

(2) Unless we require more testing, you may show compliance by testing production-line engines/equipment as described in this subpart.

(3) We will issue a new or updated certificate of conformity when you have met these requirements.

§ 1068.450 What records must I send to EPA?

(a) Within 30 days of the end of each audit, send us a report with the following information:

(1) Describe any facility used to test production-line engines/equipment and state its location.

(2) State the total U.S.-directed production volume and number of tests for each family.

(3) Describe your test engines/equipment, including the family's identification and the engine/equipment's model year, build date, model number, identification number, and number of hours of operation before testing for each test engine or piece of equipment.

(4) Identify where you accumulated hours of operation on the engines/equipment and describe the procedure and schedule you used.

(5) Provide the test number; the date, time and duration of testing; test procedure; initial test results before and after rounding; final test results; and final deteriorated test results for all tests. Provide the emission figures for all measured pollutants. Include information for both valid and invalid tests and the reason for any invalidation.

(6) Describe completely and justify any nonroutine adjustment, modification, repair, preparation, maintenance, or test for the test engine/equipment if you did not report it separately under this subpart. Include the results of any emission measurements, regardless of the procedure or type of equipment.

(7) Report on each failed engine or piece of equipment as described in § 1068.425.

(b) We may ask you to add information to your written report, so we can determine whether your new engines/equipment conform to the requirements of this subpart.

(c) An authorized representative of your company must sign the following statement: We submit this report under Sections 208 and 213 of the Clean Air Act. Our testing conformed completely with the requirements of 40 CFR part 1068. We have not changed production processes or quality-control procedures for the family in a way that might affect the emission control from production engines/equipment. All the information in this report is true and accurate to the best of my knowledge. I know of the penalties for violating the Clean Air Act and the regulations. (Authorized Company Representative)

(d) Send reports of your testing to the Designated Compliance Officer using an approved information format. If you want to use a different format, send us a written request with justification for a waiver.

(e) We may post test results on publicly accessible databases and we will send copies of your reports to anyone from the public who asks for them. We will not release information about your sales or production volumes, which is all we will consider confidential.

[73 FR 59344, Oct. 8, 2008, as amended at 81 FR 74232, Oct. 25, 2016]

§ 1068.455 What records must I keep?

(a) We may review your records at any time so it is important to keep required information readily available. Organize and maintain your records as described in this section.

(b) Keep paper records for testing under this subpart for one full year after you complete all the testing required for the selective enforcement audit. For additional storage, you may use any format or media.

(c) Keep a copy of the written reports described in § 1068.450.

(d) Keep the following additional records:

(1) The names of supervisors involved in each test.

(2) The name of anyone who authorizes adjusting, repairing, preparing, or modifying a test engine/equipment and

the names of all supervisors who oversee this work.

(3) If you shipped the engine/equipment for testing, the date you shipped it, the associated storage or port facility, and the date the engine/equipment arrived at the testing facility.

(4) Any records related to your audit that are not in the written report.

(5) A brief description of any significant events during testing not otherwise described in the written report or in this section.

(e) If we ask, you must give us projected or actual production for a family. Include each assembly plant if you produce engines/equipment at more than one plant.

(f) We may ask you to keep or send other information necessary to implement this subpart.

APPENDIX A TO SUBPART E OF PART 1068—PLANS FOR SELECTIVE ENFORCEMENT AUDITING

The following tables describe sampling plans for selective enforcement audits, as described in §1068.420:

TABLE A–1—SAMPLING PLAN CODE LETTER

Projected family sales	Code letter [1]	Minimum number of tests		Maximum number of tests
		To pass	To fail	
20–50	AA	3	5	20
20–99	A	4	6	30
100–299	B	5	6	40
300–499	C	5	6	50
500 +	D	5	6	60

[1] A manufacturer may optionally use either the sampling plan for code letter ''AA'' or sampling plan for code letter ''A'' for Selective Enforcement Audits of families with annual sales between 20 and 50 engines/equipment. Additionally, the manufacturer may switch between these plans during the audit.

TABLE A–2—SAMPLING PLANS FOR DIFFERENT ENGINE FAMILY SALES VOLUMES

Stage [a]	AA		A		B		C		D	
	Pass #	Fail #	Pass #	Fail #	Pass #	Fail #	Pass #	Fail #	Pass #	Fail #
1	.....	.....	.....	.....	.....	.....	.....	.....	.....	
2	.....	.....	.....	.....	.....	.....	.....	.....	.....	
3	0	.....	.....	.....	.....	.....	.....	.....	.....	
4	0	.....	0	.....	.....	.....	.....	.....	.....	
5	1	5	0	.....	0	.....	0	.....	0	
6	1	6	1	6	1	6	0	6	0	6
7	2	6	1	7	1	7	1	7	1	7
8	2	7	2	7	2	7	2	7	2	8
9	3	7	2	8	2	8	2	8	2	8
10	3	8	3	8	3	8	3	9	3	9
11	4	8	3	8	3	9	3	9	3	9
12	4	9	4	9	4	9	4	10	4	10
13	5	9	5	10	4	10	4	10	4	10
14	5	10	5	10	5	10	5	11	5	11
15	6	10	6	11	5	11	5	11	5	11
16	6	10	6	11	6	12	6	12	6	12
17	7	10	7	12	6	12	6	12	6	12
18	8	10	7	12	7	13	7	13	7	13
19	8	10	8	13	8	13	7	13	7	13
20	9	10	8	13	8	14	8	14	8	14
21	.....	.....	9	14	9	14	8	14	8	14
22	.....	.....	10	14	9	15	9	15	9	15
23	.....	.....	10	15	10	15	10	15	9	15
24	.....	.....	11	15	10	16	10	16	10	16
25	.....	.....	11	16	11	16	11	16	11	16
26	.....	.....	12	16	11	17	11	17	11	17
27	.....	.....	12	17	12	17	12	17	12	17
28	.....	.....	13	17	12	18	12	18	12	18
29	.....	.....	14	17	13	18	13	18	13	19
30	.....	.....	16	17	13	19	13	19	13	19
31	.....	.....	.....	.....	14	19	14	19	14	20
32	.....	.....	.....	.....	14	20	14	20	14	20
33	.....	.....	.....	.....	15	20	15	20	15	21
34	.....	.....	.....	.....	16	21	15	21	15	21

TABLE A–2—SAMPLING PLANS FOR DIFFERENT ENGINE FAMILY SALES VOLUMES—Continued

Stage [a]	AA		A		B		C		D	
	Pass #	Fail #	Pass #	Fail #	Pass #	Fail #	Pass #	Fail #	Pass #	Fail #
35	.....	.....	.....	.....	16	21	16	21	16	22
36	.....	.....	.....	.....	17	22	16	22	16	22
37	.....	.....	.....	.....	17	22	17	22	17	23
38	.....	.....	.....	.....	18	22	18	23	17	23
39	.....	.....	.....	.....	18	22	18	23	18	24
40	.....	.....	.....	.....	21	22	19	24	18	24
41	.....	.....	.....	.....	.....	.....	19	24	19	25
42	.....	.....	.....	.....	.....	.....	20	25	19	26
43	.....	.....	.....	.....	.....	.....	20	25	20	26
44	.....	.....	.....	.....	.....	.....	21	26	21	27
45	.....	.....	.....	.....	.....	.....	21	27	21	27
46	.....	.....	.....	.....	.....	.....	22	27	22	28
47	.....	.....	.....	.....	.....	.....	22	27	22	28
48	.....	.....	.....	.....	.....	.....	23	27	23	29
49	.....	.....	.....	.....	.....	.....	23	27	23	29
50	.....	.....	.....	.....	.....	.....	26	27	24	30
51	.....	.....	.....	.....	.....	.....	.....	.....	24	30
52	.....	.....	.....	.....	.....	.....	.....	.....	25	31
53	.....	.....	.....	.....	.....	.....	.....	.....	25	31
54	.....	.....	.....	.....	.....	.....	.....	.....	26	32
55	.....	.....	.....	.....	.....	.....	.....	.....	26	32
56	.....	.....	.....	.....	.....	.....	.....	.....	27	33
57	.....	.....	.....	.....	.....	.....	.....	.....	27	33
58	.....	.....	.....	.....	.....	.....	.....	.....	28	33
59	.....	.....	.....	.....	.....	.....	.....	.....	28	33
60	.....	.....	.....	.....	.....	.....	.....	.....	32	33

[a] Stage refers to the cumulative number of engines/equipment tested.

Subpart F—Reporting Defects and Recalling Engines/Equipment

§ 1068.501 How do I report emission-related defects?

This section addresses the certificate holder's responsibility to investigate and report emission-related defects in design, materials, or workmanship. The provisions of this section do not limit your liability under this part or the Clean Air Act. For example, selling an engine/equipment that does not conform to your application for certification is a violation of § 1068.101(a)(1) independent of the requirements of this section. The requirements of this section apply separately to each certificate holder if there is more than one certificate holder for the equipment.

(a) *General provisions.* As a certifying manufacturer, you must investigate in certain circumstances whether engines/equipment that have been introduced into U.S. commerce under your certificate have incorrect, improperly installed, or otherwise defective emission-related components or systems. This includes defects in design, materials, or workmanship. You must also send us reports as specified by this section.

(1) This section addresses defects for any of the following emission-related components or systems containing the following components:

(i) Electronic control units, aftertreatment devices, fuel-metering components, EGR-system components, crankcase-ventilation valves, all components related to charge-air compression and cooling, and all sensors associated with any of these components.

(ii) For engines and equipment subject to evaporative emission standards, fuel tanks, fuel caps, and fuel lines and connectors.

(iii) Any other component whose primary purpose is to reduce emissions.

(iv) Any other component whose failure would commonly increase emissions of any regulated pollutant without significantly degrading engine/equipment performance.

(2) The requirements of this section relate to defects in any of the components or systems identified in paragraph (a)(1) of this section if the defects might affect any of the parameters or specifications in Appendix II of

this part or might otherwise affect the emissions of any regulated pollutant.

(3) For the purposes of this section, defects do not include damage to emission-related components or systems (or maladjustment of parameters) caused by owners improperly maintaining or abusing their engines/equipment.

(4) The requirements of this section do not apply to emission control information labels. Note however, that §1068.101(a)(1) prohibits the sale of engines/equipment without proper labels, which also applies to misprinted labels.

(5) You must track the information specified in paragraph (b)(1) of this section. You must assess this data at least every three months to evaluate whether you exceed the thresholds specified in paragraphs (e) and (f) of this section. Where thresholds are based on a percentage of engines/equipment in the family, use actual U.S.-directed production volumes for the whole model year when they become available. Use projected production figures until the actual production figures become available. You are not required to collect additional information other than that specified in paragraph (b)(1) of this section before reaching a threshold for an investigation specified in paragraph (e) of this section.

(6) You may ask us to allow you to use alternate methods for tracking, investigating, reporting, and correcting emission-related defects. In your request, explain and demonstrate why you believe your alternate system will be at least as effective in the aggregate in tracking, identifying, investigating, evaluating, reporting, and correcting potential and actual emissions-related defects as the requirements in this section. In this case, provide all available data necessary to demonstrate why an alternate system is appropriate for your engines/equipment and how it will result in a system at least as effective as that required under this section.

(7) If we determine that emission-related defects result in a substantial number of properly maintained and used engines/equipment not conforming to the regulations of this chapter during their useful life, we may order you to conduct a recall of your engines/equipment (see §1068.505).

(8) Send all reports required by this section to the Designated Compliance Officer.

(9) This section distinguishes between defects and possible defects. A possible defect exists anytime there is an indication that an emission-related component or system might have a defect, as described in paragraph (b)(1) of this section.

(b) *Investigation of possible defects.* Investigate possible defects as follows:

(1) If the number of engines/equipment that have a possible defect, as defined by this paragraph (b)(1), exceeds a threshold specified in paragraph (e) of this section, you must conduct an investigation to determine if an emission-related component or system is actually defective. You must classify an engine/equipment component or system as having a possible defect if any of the following sources of information shows there is a significant possibility that a defect exists:

(i) A warranty claim is submitted for the component, whether this is under your emission-related warranty or any other warranty.

(ii) Your quality-assurance procedures suggest that a defect may exist.

(iii) You receive any other information for which good engineering judgment would indicate the component or system may be defective, such as information from dealers, field-service personnel, equipment manufacturers, hotline complaints, in-use testing, or engine diagnostic systems.

(2) If the number of shipped replacement parts for any individual component is high enough that good engineering judgment would indicate a significant possibility that a defect exists, you must conduct an investigation to determine if it is actually defective. Note that this paragraph (b)(2) does not require data-tracking or recording provisions related to shipment of replacement parts.

(3) Your investigation must be prompt, thorough, consider all relevant information, follow accepted scientific and engineering principles, and be designed to obtain all the information specified in paragraph (d) of this section.

(4) Your investigation needs to consider possible defects that occur only

within the useful life period, or within five years after the end of the model year, whichever is longer.

(5) You must continue your investigation until you are able to show that there is no emission-related defect or you obtain all the information specified for a defect report in paragraph (d) of this section.

(6) If a component with a possible defect is used in additional families or model years, you must investigate whether the component may be defective when used in these additional families or model years, and include these results in any defect report you send under paragraph (c) of this section.

(7) If your initial investigation concludes that the number of engines/equipment with a defect is fewer than any of the thresholds specified in paragraph (f) of this section, but other information later becomes available that may show that the number of engines/equipment with a defect exceeds a threshold, then you must resume your investigation. If you resume an investigation, you must include the information from the earlier investigation to determine whether to send a defect report.

(c) *Reporting defects.* You must send us a defect report in either of the following cases:

(1) Your investigation shows that the number of engines/equipment with a defect exceeds a threshold specified in paragraph (f) of this section. Send the defect report within 21 days after the date you identify this number of defective engines/equipment. See paragraph (h) of this section for reporting requirements that apply if the number of engines/equipment with a defect does not exceed any of the thresholds in paragraph (f) of this section.

(2) You know there are emission-related defects for a component or system in a number of engines/equipment that exceeds a threshold specified in paragraph (f) of this section, regardless of how you obtain this information. Send the defect report within 21 days after you learn that the number of defects exceeds a threshold. Send us an updated defect report anytime you have significant additional information.

(d) *Contents of a defect report.* Include the following information in a defect report:

(1) Your corporate name and a person to contact regarding this defect.

(2) A description of the defect, including a summary of any engineering analyses and associated data, if available.

(3) A description of the engines/equipment that have the defect, including families, models, and range of production dates.

(4) An estimate of the number and percentage of each class or category of affected engines/equipment that have the defect, and an explanation of how you determined this number. Describe any statistical methods you used under paragraph (g)(6) of this section.

(5) An estimate of the defect's impact on emissions, with an explanation of how you calculated this estimate and a summary of any emission data demonstrating the impact of the defect, if available.

(6) A description of your plan for addressing the defect or an explanation of your reasons for not believing the defects must be addressed.

(e) *Thresholds for conducting a defect investigation.* You must begin a defect investigation based on the following number of engines/equipment that may have the defect:

(1) For engines/equipment with maximum engine power at or below 560 kW:

(i) For families with annual production below 500 units: 50 or more engines/equipment.

(ii) For families with annual production from 500 to 50,000 units: more than 10.0 percent of the total number of engines/equipment in the family.

(iii) For families with annual production from 50,000 to 550,000 units: more than the total number of engines/equipment represented by the following equation:

$$\text{Investigation threshold} = 5{,}000 + (\text{Production units} - 50{,}000) \times 0.04$$

(iv) For families with annual production above 550,000 units: 25,000 or more engines/equipment.

(2) For engines/equipment with maximum engine power greater than 560 kW:

(i) For families with annual production below 250 units: 25 or more engines/equipment.

(ii) For families with annual production at or above 250 units: more than 10.0 percent of the total number of engines/equipment in the family.

(f) *Thresholds for filing a defect report.* You must send a defect report based on the following number of engines/equipment that have the defect:

(1) For engines/equipment with maximum engine power at or below 560 kW:

(i) For families with annual production below 1,000 units: 20 or more engines/equipment.

(ii) For families with annual production from 1,000 to 50,000 units: more than 2.0 percent of the total number of engines/equipment in the family.

(iii) For families with annual production from 50,000 to 550,000 units: more than the total number of engines/equipment represented by the following equation:

$$\text{Reporting threshold} = 1{,}000 + (\text{Production units} - 50{,}000) \times 0.01$$

(iv) For families with annual production above 550,000 units: 6,000 or more engines/equipment.

(2) For engines/equipment with maximum engine power greater than 560 kW:

(i) For families with annual production below 150 units: 10 or more engines/equipment.

(ii) For families with annual production from 150 to 750 units: 15 or more engines/equipment.

(iii) For families with annual production above 750 units: more than 2.0 percent of the total number of engines/equipment in the family.

(g) *How to count defects.* (1) Track defects separately for each model year and family as much as possible. If information is not identifiable by model year or family, use good engineering judgment to evaluate whether you exceed a threshold in paragraph (e) or

(f) of this section. Consider only your U.S.-directed production volume.

(2) Within a family, track defects together for all components or systems that are the same in all material respects. If multiple companies separately supply a particular component or system, treat each company's component or system as unique.

(3) For engine-based standards, if a possible defect is not attributed to any specific part of the engine, consider the complete engine a distinct component for evaluating whether you exceed a threshold in paragraph (e) of this section. For equipment-based standards, if a possible defect is not attributed to any specific part of the equipment, consider the complete piece of equipment a distinct component for evaluating whether you exceed a threshold in paragraph (e) of this section.

(4) If you correct defects before they reach the ultimate purchaser as a result of your quality-assurance procedures, count these against the investigation thresholds in paragraph (e) of this section unless you routinely check every engine or piece of equipment in the family. Do not count any corrected defects as actual defects under paragraph (f) of this section.

(5) Use aggregated data from all the different sources identified in paragraph (b)(1) of this section to determine whether you exceed a threshold in paragraphs (e) and (f) of this section.

(6) If information is readily available to conclude that the possible defects identified in paragraph (b)(1) of this section are actual defects, count these toward the reporting thresholds in paragraph (f) of this section.

(7) During an investigation, use appropriate statistical methods to project defect rates for engines/equipment that you are not otherwise able to evaluate. For example, if 75 percent of the components replaced under warranty are available for evaluation, it would be appropriate to extrapolate known information on failure rates to the components that are unavailable for evaluation. Take steps as necessary to prevent bias in sampled data. Make adjusted calculations to take into account any bias that may remain.

(h) *Investigation reports.* Once you trigger an investigation threshold under paragraph (e) of this section, you must report your progress and conclusions. In your reports, include the information specified in paragraph (d) of this section, or explain why the information is not relevant. Send us the following reports:

(1) While you are investigating, send us mid-year and end-of-year reports to

describe the methods you are using and the status of the investigation. Send these status reports no later than June 30 and December 31 of each year.

(2) If you find that the number of components or systems with an emission-related defect exceeds a threshold specified in paragraph (f) of this section, send us a report describing your findings within 21 days after the date you reach this conclusion.

(3) If you find that the number of components or systems with an emission-related defect does not exceed any of the thresholds specified in paragraph (f) of this section, send us a final report supporting this conclusion. For example, you may exclude warranty claims that resulted from misdiagnosis and you may exclude defects caused by improper maintenance, improper use, or misfueling. Send this report within 21 days after the date you reach this conclusion.

(i) *Future production*. If you identify a design or manufacturing defect that prevents engines/equipment from meeting the requirements of this part, you must correct the defect as soon as possible for future production of engines/equipment in every family affected by the defect. This applies without regard to whether you are required to conduct a defect investigation or submit a defect report under this section.

[73 FR 59344, Oct. 8, 2008, as amended at 75 FR 23064, Apr. 30, 2010; 81 FR 74232, Oct. 25, 2016]

§ 1068.505 How does the recall program work?

(a) If we make a determination that a substantial number of properly maintained and used engines/equipment within a given class or category do not conform to the regulations of this chapter during their useful life, you must submit a plan to remedy the nonconformity of your engines/equipment. We will notify you of our determination in writing. Our notice will identify the class or category of engines/equipment affected and describe how we reached our conclusion. If this happens, you must meet the requirements and follow the instructions in this subpart. You must remedy at your expense all engines/equipment that experienced the nonconformity during the useful life in spite of being properly maintained and used, as described in § 1068.510(a)(7), regardless of their age or extent of service accumulation at the time of repair. You may not transfer this expense to a dealer (or equipment manufacturer for engine-based standards) through a franchise or other agreement.

(b) You may ask for a hearing if you disagree with our determination (see subpart G of this part).

(c) Unless we withdraw the determination of noncompliance, you must respond to it by sending a remedial plan to the Designated Compliance Officer. We will designate a date by which you must send us the remedial plan; the designated date will be no sooner than 45 days after we notify you, and no sooner than 30 days after a hearing.

(d) Once you have sold engines/equipment to the ultimate purchaser, we may inspect or test the engines/equipment only if the purchaser permits it, or if state or local inspection programs separately provide for it.

(e) You may ask us to allow you to conduct your recall differently than specified in this subpart, consistent with section 207(c) of the Clean Air Act (42 U.S.C. 7541(c)).

(f) You may do a voluntary recall under § 1068.535 unless we have made the determination described in § 1068.535(a).

(g) For purposes of recall, ''owner'' means someone who owns an engine or piece of equipment affected by a remedial plan.

[73 FR 59344, Oct. 8, 2008, as amended at 81 FR 74233, Oct. 25, 2016]

§ 1068.510 How do I prepare and apply my remedial plan?

(a) In your remedial plan, describe all of the following:

(1) The class or category of engines/equipment to be recalled, including the number of engines/equipment involved and the model year or other information needed to identify the engines/equipment.

(2) The modifications, alterations, repairs, corrections, adjustments, or other changes you will make to correct the affected engines/equipment.

(3) A brief description of the studies, tests, and data that support the effectiveness of the remedy you propose to use.

(4) The instructions you will send to those who will repair the engines/equipment under the remedial plan.

(5) How you will determine the owners' names and addresses.

(6) How you will notify owners; include a copy of any notification letters.

(7) The proper maintenance or use you will specify, if any, as a condition to be eligible for repair under the remedial plan. Describe how these specifications meet the provisions of paragraph (e) of this section. Describe how the owners should show they meet your conditions.

(8) The steps owners must take for you to do the repair. You may set a date or a range of dates, specify the amount of time you need, and designate certain facilities to do the repairs.

(9) Which company (or group) you will assign to do or manage the repairs.

(10) If your employees or authorized warranty agents will not be doing the work, state who will and describe their qualifications.

(11) How you will ensure an adequate and timely supply of parts.

(12) The effect of proposed changes on fuel consumption, driveability, and safety of the engines/equipment you will recall; include a brief summary of the information supporting these conclusions.

(13) How you intend to label the engines/equipment you repair and where you will place the label on the engine/equipment (see § 1068.515).

(b) We may require you to add information if it is needed to evaluate your remedial plan.

(c) We may require you to test the proposed repair to show it will remedy the noncompliance.

(d) Use all reasonable means to locate owners. We may require you to use government or commercial registration lists to get owners' names and addresses so your notice will be effective.

(e) The maintenance or use that you specify as a condition for eligibility under the remedial plan may include only things you can show would cause noncompliance. Do not require use of a component or service identified by brand, trade, or corporate name unless we approved this approach with your original certificate of conformity. Also, do not place conditions on who maintained the engine/equipment.

(f) We may require you to adjust your repair plan if we determine owners would be without their engines or equipment for an unreasonably long time.

(g) We will tell you in writing within 15 days of receiving your remedial plan whether we have approved or disapproved it. We will explain our reasons for any disapproval.

(h) Begin notifying owners within 15 days after we approve your remedial plan. If we hold a hearing, but do not change our position about the noncompliance, you must begin notifying owners within 60 days after we complete the hearing unless we specify a later deadline.

[73 FR 59344, Oct. 8, 2008, as amended at 81 FR 74233, Oct. 25, 2016]

§ 1068.515 How do I mark or label repaired engines/equipment?

(a) Attach a label to engines/equipment you repair under the remedial plan. At your discretion, you may label or mark engines/equipment you inspect but do not repair. Designate the specific recall campaign on the label.

(b) Make the label from a durable material suitable for its planned location. Make sure no one can remove the label without destroying or defacing it.

(c) Identify the facility where you repaired or inspected the engine/equipment on the label, or keep records of this information for each vehicle and give it to us if we ask for it.

(d) We may waive or modify the labeling requirements if we determine they are overly burdensome.

[73 FR 59344, Oct. 8, 2008, as amended at 81 FR 74233, Oct. 25, 2016]

§ 1068.520 How do I notify affected owners?

(a) Notify owners by first class mail or e-mail unless we say otherwise. We may require you to use certified mail. Include the following in your notice:

(1) State: ''The U.S. Environmental Protection Agency has determined that

your engine/equipment may be emitting pollutants in excess of the federal emission standards as defined in Title 40 of the Code of Federal Regulations. These emission standards were established to protect the public health or welfare from air pollution.''

(2) State that you (or someone you designate) will repair these engines/equipment at your expense.

(3) If we approved maintenance and use conditions in your remedial plan, state that you will make these repairs only if owners show their engines/equipment meet the conditions for proper maintenance and use. Describe these conditions and how owners should prove their engines/equipment are eligible for repair.

(4) Describe the components your repair will affect and say generally how you will repair the engines/equipment.

(5) State that the engine/equipment, if not repaired, may fail an emission inspection test if state or local law requires one.

(6) Describe any adverse effects on its performance or driveability that would be caused by not repairing the engine/equipment.

(7) Describe any adverse effects on the functions of other components that would be caused by not repairing the engine/equipment.

(8) Specify the date you will start the repairs, the amount of time you will need to do them, and where you will do them. Include any other information owners may need to know.

(9) Allow for the owner to inform you using one of the following methods if they have sold the engine/equipment:

(i) Send a self-addressed card that owners can mail back to you; include a space for owners to write the name and address of a buyer.

(ii) Provide owners with a toll-free number and an e-mail address or Web site they can use to identify the name and address of a buyer.

(10) State that owners should call you at a phone number you give to report any difficulty in obtaining repairs.

(11) State: ''To ensure your full protection under the emission warranty on your [engine/equipment] by federal law, and your right to participate in future recalls, we recommend you have your [engine/equipment] serviced as soon as possible. We may consider your not servicing it to be improper maintenance.''

(b) We may require you to add information to your notice or to send more notices if we determine this is reasonable and necessary to ensure an effective recall.

(c) You may not in any communication with owners or dealers say or imply that your noncompliance does not exist or that it will not degrade air quality.

[73 FR 59344, Oct. 8, 2008, as amended at 81 FR 74233, Oct. 25, 2016]

§ 1068.525 What records must I send to EPA?

(a) Send us a copy of all communications related to the remedial plan you sent to dealers and others doing the repairs. Mail or e-mail us the information at the same time you send it to others.

(b) From the time you begin to notify owners, send us a report within 25 days of the end of each calendar quarter. Send reports for six consecutive quarters or until all the engines/equipment are inspected, whichever comes first. In these reports, identify the following:

(1) The range of dates you needed to notify owners.

(2) The total number of notices sent.

(3) The number of engines/equipment you estimate fall under the remedial plan (explain how you determined this number).

(4) The cumulative number of engines/equipment you inspected under the remedial plan.

(5) The cumulative number of these engines/equipment you found needed the specified repair.

(6) The cumulative number of these engines/equipment you have repaired.

(7) The cumulative number of engines/equipment you determined to be unavailable due to exportation, theft, retirement, or other reasons (specify).

(8) The cumulative number of engines/equipment you disqualified for not being properly maintained or used.

(c) If your estimated number of engines/equipment falling under the remedial plan changes, change the estimate in your next report and add an explanation for the change.

(d) We may ask for more information.

(e) We may waive reporting requirements or adjust the reporting schedule.

(f) If anyone asks to see the information in your reports, we will follow the provisions of § 1068.10 for handling confidential information.

§ 1068.530 What records must I keep?

We may review your records at any time so it is important that you keep required information readily available. Keep records associated with your recall campaign for five years after you send the last report we require under § 1068.525(b). Organize and maintain your records as described in this section.

(a) Keep a paper copy of the written reports described in § 1068.525.

(b) Keep a record of the names and addresses of owners you notified. For each engine or piece of equipment, state whether you did any of the following:

(1) Inspected the engine/equipment.

(2) Disqualified the engine/equipment for not being properly maintained or used.

(3) Completed the prescribed repairs.

(c) You may keep the records in paragraph (b) of this section in any form we can inspect, including computer databases.

[73 FR 59344, Oct. 8, 2008, as amended at 81 FR 74233, Oct. 25, 2016]

§ 1068.535 How can I do a voluntary recall for emission-related problems?

If we have made a determination that a substantial number of properly maintained and used engines/equipment do not conform to the regulations of this chapter during their useful life, you may not use a voluntary recall or other alternate means to meet your obligation to remedy the noncompliance. Thus, this section applies only if you learn that your family does not meet the requirements of this chapter and we have not made such a determination.

(a) To do a voluntary recall under this section, first send the Designated Compliance Officer a plan, following the guidelines in § 1068.510. Within 15 days, we will send you our comments on your plan.

(b) Once we approve your plan, start notifying owners and carrying out the specified repairs. Make reasonable efforts to carry out the recall as quickly as possible.

(c) From the time you start the recall campaign, send us a report within 25 days of the end of each calendar quarter, following the guidelines in § 1068.525(b). Send reports for six consecutive quarters or until all the engines/equipment are inspected, whichever comes first.

(d) Keep your reports and the supporting information as described in § 1068.530.

Subpart G—Hearings

SOURCE: 81 FR 74233, Oct. 25, 2016, unless otherwise noted.

§ 1068.601 Overview.

The regulations of this chapter involve numerous provisions that may result in EPA making a decision or judgment that you may consider adverse to your interests and that either limits your business activities or requires you to pay penalties. As specified in the regulations in this chapter, this might involve an opportunity for an informal hearing or a formal hearing that follows specific procedures and is directed by a Presiding Officer. The regulations in this chapter generally specify when we would hold a hearing. In limited circumstances, we may grant a request for a hearing related to adverse decisions regarding regulatory provisions for which we do not specifically describe the possibility of asking for a hearing.

(a) If you request a hearing regarding our decision to assess administrative penalties under § 1068.125, we will hold a formal hearing according to the provisions of 40 CFR 22.1 through 22.32 and 22.34.

(b) For other issues where the regulation allows for a hearing in response to an adverse decision, you may request an informal hearing as described in § 1068.650. Sections 1068.610 through 1068.625 describe when and how to request an informal hearing under various circumstances.

(c) The time limits we specify are calendar days and include weekends

and holidays, except that a deadline falling on a Saturday, Sunday, or a federal holiday is understood to move to the next business day. Your filing will be considered timely based on the following criteria relative to the specified deadline:

(1) The postmarked date for items sent by U.S. mail must be on or before the specified date.

(2) The ship date for items sent from any location within the United States by commercial carriers must be on or before the specified date.

(3) Items sent by mail or courier from outside the United States must be received by the specified date.

(4) The time and date stamp on an email message must be at or before 5:00 p.m. on the specified date (in either the source or destination time zone).

(5) The time and date stamp on faxed pages must be at or before 5:00 p.m. on the specified date (in either the source or destination time zone).

(6) Hand-delivered items must be received by the appropriate personnel by 3:00 p.m. on the specified date.

(d) See the standard-setting part for additional information. If the standard-setting part specifies any provisions that are contrary to those described in this subpart, the provisions of the standard-setting part apply instead of those described in this subpart.

§ 1068.610 Request for hearing—suspending, revoking, or voiding a certificate of conformity.

(a) You may request an informal hearing as described in § 1068.650 if you disagree with our decision to suspend, revoke, or void a certificate of conformity.

(b) If you request a hearing regarding the outcome of a testing regimen with established evaluation criteria, such as selective enforcement audits or routine production-line testing, we will hold a hearing limited to the following issues that are relevant to your circumstances:

(1) Whether tests were conducted in accordance with applicable regulations.

(2) Whether test equipment was properly calibrated and functioning.

(3) Whether specified sampling procedures were followed to select engines/equipment for testing.

(4) Whether there is a basis for determining that the problems identified do not apply for engines/equipment produced at plants other than the one from which engines/equipment were selected for testing.

(c) You must send your hearing request in writing to the Designated Compliance Officer no later than 30 days after we notify you of our decision to suspend, revoke, or void your certificate, or by some later deadline we specify. If the deadline passes, we may nevertheless grant you a hearing at our discretion.

(d) Your hearing request must include the following information:

(1) Identify the classes or categories of engines/equipment that will be the subject of the hearing.

(2) State briefly which issues you will raise at the hearing for each affected class or category of engines/equipment.

(3) Specify why you believe the hearing will conclude in your favor for each of the issues you will raise.

(4) Summarize the evidence supporting your position on each of the issues you will raise and include any supporting data.

(e) We will approve your request for an informal hearing if we find that your request raises a substantial factual issue in the decision we made that, if addressed differently, could alter the outcome of that decision.

§ 1068.615 Request for hearing—denied application for certification, automatically suspended certificate, and determinations related to certification.

(a) You may request an informal hearing as described in § 1068.650 if we deny your application for a certificate of conformity, if your certificate of conformity is automatically suspended under the regulations, or if you disagree with determinations we make as part of the certification process. For example, you might disagree with our determinations regarding adjustable parameters under § 1068.50 or regarding your good engineering judgment under § 1068.5.

(b) You must send your hearing request in writing to the Designated

Compliance Officer no later than 30 days after we notify you of our decision, or by some later deadline we specify. If the specified deadline passes, we may nevertheless grant you a hearing at our discretion.

(c) Your hearing request must include the information specified in § 1068.610(d).

(d) We will approve your request for an informal hearing if we find that your request raises a substantial factual issue in the decision we made that, if addressed differently, could alter the outcome of that decision.

§ 1068.620 Request for hearing—recall.

(a) You may request an informal hearing as described in § 1068.650 if you disagree with our decision to order a recall.

(b) You must send your hearing request in writing to the Designated Compliance Officer no later than 45 days after we notify you of our decision, or by some later deadline we specify. If the specified deadline passes, we may nevertheless grant you a hearing at our discretion.

(c) Your hearing request must include the information specified in § 1068.610(d).

(d) We will approve your request for an informal hearing if we find that your request raises a substantial factual issue in the decision we made that, if addressed differently, could alter the outcome of that decision.

§ 1068.625 Request for hearing—nonconformance penalties.

(a) You may request an informal hearing as described in § 1068.650 if you disagree with our determination of compliance level or penalty calculation or both. The hearing will address only whether the compliance level or penalty was determined in accordance with the regulations.

(b) Send a request for a hearing in writing to the Designated Compliance Officer within the following time frame, as applicable:

(1) No later than 15 days after we notify you that we have approved a nonconformance penalty under this subpart if the compliance level is in the allowable range of nonconformity.

(2) No later than 15 days after completion of the Production Compliance Audit if the compliance level exceeds the upper limit.

(3) No later than 15 days after we notify you of an adverse decision for all other cases.

(c) If you miss the specified deadline in paragraph (b) of this section, we may nevertheless grant youa hearing at our discretion.

(d) Your hearing request must include the information specified in § 1068.610(d).

(e) We will approve your request for an informal hearing if we find that your request raises a substantial factual issue in the decision we made that, if addressed differently, could alter the outcome of that decision.

§ 1068.650 Procedures for informal hearings.

(a) The following provisions apply for arranging the hearing:

(1) After granting your request for an informal hearing, we will designate a Presiding Officer for the hearing.

(2) The Presiding Officer will select the time and place for the hearing. The hearing must be held as soon as practicable for all parties involved.

(3) The Presiding Officer may require that all argument and presentation of evidence be concluded by a certain date after commencement of the hearing.

(b) The Presiding Officer will establish a paper or electronic hearing record, which may be made available for inspection. The hearing record includes, but is not limited to, the following materials:

(1) All documents relating to the application for certification, including the certificate of conformity itself, if applicable.

(2) Your request for a hearing and the accompanying supporting data.

(3) Correspondence and other data relevant to the hearing.

(4) The Presiding Officer's written decision regarding the subject of the hearing, together with any accompanying material.

(c) You may appear in person or you may be represented by counsel or by any other representative you designate.

(d) The Presiding Officer may arrange for a prehearing conference, either in response to a request from any party or at his or her own discretion. The Presiding Officer will select the time and place for the prehearing conference. The Presiding Officer will summarize the results of the conference and include the written summary as part of the record. The prehearing conference may involve consideration of the following items:

(1) Simplification of the issues.

(2) Stipulations, admissions of fact, and the introduction of documents.

(3) Limitation of the number of expert witnesses.

(4) Possibility of reaching an agreement to resolve any or all of the issues in dispute.

(5) Any other matters that may aid in expeditiously and successfully concluding the hearing.

(e) Hearings will be conducted as follows:

(1) The Presiding Officer will conduct informal hearings in an orderly and expeditious manner. The parties may offer oral or written evidence; however, the Presiding Officer may exclude evidence that is irrelevant, immaterial, or repetitious.

(2) Witnesses will not be required to testify under oath; however, the Presiding Officer must make clear that 18 U.S.C. 1001 specifies civil and criminal penalties for knowingly making false statements or representations or using false documents in any matter within the jurisdiction of EPA or any other department or agency of the United States.

(3) Any witness may be examined or cross-examined by the Presiding Officer, by you, or by any other parties.

(4) Written transcripts must be made for all hearings. Anyone may purchase copies of transcripts from the reporter.

(f) The Presiding Officer will make a final decision with written findings, conclusions and supporting rationale on all the substantial factual issues presented in the record. The findings, conclusions, and written decision must be provided to the parties and made a part of the record.

APPENDIX I TO PART 1068—EMISSION-RELATED COMPONENTS

This appendix specifies emission-related components that we refer to for describing such things as emission-related warranty or requirements related to rebuilding engines. Note that inclusion of a component in Section III of this Appendix does not make it an emission-related component for engines/equipment that are not subject to evaporative emission standards.

I. For exhaust emissions, emission-related components include any engine parts related to the following systems:

1. Air-induction system.
2. Fuel system.
3. Ignition system.
4. Exhaust gas recirculation systems.

II. The following parts are also considered emission-related components for exhaust emissions:

1. Aftertreatment devices.
2. Crankcase ventilation valves.
3. Sensors.
4. Electronic control units.

III. The following parts are considered emission-related components for evaporative emissions:

1. Fuel Tank.
2. Fuel Cap.
3. Fuel Line.
4. Fuel Line Fittings.
5. Clamps*.
6. Pressure Relief Valves*.
7. Control Valves*.
8. Control Solenoids*.
9. Electronic Controls*.
10. Vacuum Control Diaphragms*.
11. Control Cables*.
12. Control Linkages*.
13. Purge Valves.
14. Vapor Hoses.
15. Liquid/Vapor Separator.
16. Carbon Canister.
17. Canister Mounting Brackets.
18. Carburetor Purge Port Connector.

*As related to the evaporative emission control system.

IV. Emission-related components also include any other part whose primary purpose is to reduce emissions or whose failure would commonly increase emissions without significantly degrading engine/equipment performance.

[73 FR 59344, Oct. 8, 2008, as amended at 81 FR 74235, Oct. 25, 2016]

APPENDIX II TO PART 1068—EMISSION-RELATED PARAMETERS AND SPECIFICATIONS

This appendix specifies emission-related parameters and specifications that we refer to for describing such things as emission-related defects or requirements related to rebuilding engines.

I. Basic Engine Parameters for Reciprocating Engines.
1. Compression ratio.
2. Type of air aspiration (natural, Roots-blown, supercharged, turbocharged).
3. Valves (intake and exhaust).
a. Head diameter dimension.
b. Valve lifter or actuator type and valve lash dimension.
4. Camshaft timing.
a. Valve opening—intake exhaust (degrees from top-dead center or bottom-dead center).
b. Valve closing—intake exhaust (degrees from top-dead center or bottom-dead center).
c. Valve overlap (degrees).
5. Ports—two stroke engines (intake and/or exhaust).
a. Flow area.
b. Opening timing (degrees from top-dead center or bottom-dead center).
c. Closing timing (degrees from top-dead center or bottom-dead center).
II. Intake Air System.
1. Roots blower/supercharger/turbocharger calibration.
2. Charge air cooling.
a. Type (air-to-air; air-to-liquid).
b. Type of liquid cooling (engine coolant, dedicated cooling system).
c. Performance.
3. Temperature control system calibration.
4. Maximum allowable inlet air restriction.
III. Fuel System.
1. General.
a. Engine idle speed.
b. Engine idle mixture.
2. Carburetion.
a. Air-fuel flow calibration.
b. Idle mixture.
c. Transient enrichment system calibration.
d. Starting enrichment system calibration.
e. Altitude compensation system calibration.
f. Hot idle compensation system calibration.
3. Fuel injection for spark-ignition engines.
a. Control parameters and calibrations.
b. Idle mixture.
c. Fuel shutoff system calibration.
d. Starting enrichment system calibration.
e. Transient enrichment system calibration.
f. Air-fuel flow calibration.
g. Altitude compensation system calibration.
h. Operating pressure(s).
i. Injector timing calibration.
4. Fuel injection for compression-ignition engines.
a. Control parameters and calibrations.
b. Transient enrichment system calibration.
c. Air-fuel flow calibration.
d. Altitude compensation system calibration.
e. Operating pressure(s).
f. Injector timing calibration.
IV. Ignition System for Spark-ignition Engines.
1. Control parameters and calibration.
2. Initial timing setting.
3. Dwell setting.
4. Altitude compensation system calibration.
5. Spark plug voltage.
V. Engine Cooling System—thermostat calibration.
VI. Exhaust System—maximum allowable back pressure.
VII. System for Controlling Exhaust Emissions.
1. Air injection system.
a. Control parameters and calibrations.
b. Pump flow rate.
2. EGR system.
a. Control parameters and calibrations.
b. EGR valve flow calibration.
3. Catalytic converter system.
a. Active surface area.
b. Volume of catalyst.
c. Conversion efficiency.
4. Backpressure.
VIII. System for Controlling Crankcase Emissions.
1. Control parameters and calibrations.
2. Valve calibrations.
IX. Auxiliary Emission Control Devices (AECD).
1. Control parameters and calibrations.
2. Component calibration(s).
X. System for Controlling Evaporative Emissions.
1. Control parameters and calibrations.
2. Fuel tank.
a. Volume.
b. Pressure and vacuum relief settings.
XI. Warning Systems Related to Emission Controls.
1. Control parameters and calibrations.
2. Component calibrations.

APPENDIX III TO PART 1068—HIGH-ALTITUDE COUNTIES

In some cases the standard-setting part includes requirements or other specifications that apply for high-altitude counties. The following counties have substantial populated areas above 4,000 feet above sea level and are therefore considered to be high-altitude counties:

STATE OF ARIZONA

Apache
Cochise
Coconino
Navajo
Yavapai

STATE OF COLORADO

Adams

Alamosa
Arapahoe
Archuleta
Boulder
Chaffee
Cheyenne
Clear Creek
Conejos
Costilla
Crowley
Custer
Delta
Denver
Dolores
Douglas
Eagle
Elbert
El Paso
Fremont
Garfield
Gilpin
Grand
Gunnison
Hinsdale
Huerfano
Jackson
Jefferson
Kit Carson
Lake
La Plata
Larimer
Las Animas
Lincoln
Mesa
Mineral
Moffat
Montezuma
Montrose
Morgan
Otero
Ouray
Park
Pitkin
Pueblo
Rio Blanco
Rio Grande
Routt
Saguache
San Juan
San Miguel
Summit
Teller
Washington
Weld

STATE OF IDAHO

Bannock
Bear Lake
Bingham
Blaine
Bonneville
Butte
Camas
Caribou
Cassia
Clark
Custer
Franklin
Fremont
Jefferson
Lemhi
Madison
Minidoka
Oneida
Power
Teton
Valley

STATE OF MONTANA

Beaverhead
Deer Lodge
Gallatin
Jefferson
Judith Basin
Powell
Madison
Meagher
Park
Silver Bow
Wheatland

STATE OF NEBRASKA

Banner
Cheyenne
Kimball
Sioux

STATE OF NEVADA

Carson City
Douglas
Elko
Esmeralda
Eureka
Humboldt
Lander
Lincoln
Lyon
Mineral
Nye
Pershing
Storey
Washoe
White Pine

STATE OF NEW MEXICO

Bernalillo
Catron
Colfax
Curry
De Baca
Grant
Guadalupe
Harding
Hidalgo
Lincoln
Los Alamos
Luna
McKinley
Mora
Otero
Rio Arriba
Roosevelt
Sandoval

San Juan
San Miguel
Santa Fe
Sierra
Socorro
Taos
Torrance
Union
Valencia

STATE OF OREGON

Harney
Lake
Klamath

STATE OF TEXAS

Jeff Davis
Judspeth
Parmer

STATE OF UTAH

Beaver
Box Elder
Cache
Carbon
Daggett
Davis
Duchesne
Emery
Garfield
Grand
Iron
Juab
Kane
Millard
Morgan
Piute
Rich
Salt Lake
San Juan
Sanpete
Sevier
Summit
Tooele
Uintah
Utah
Wasatch
Wayne
Weber

STATE OF WYOMING

Albany
Campbell
Carbon
Converse
Fremont
Goshen
Hot Springs
Johnson
Laramie
Lincoln
Natrona
Niobrara
Park
Platte
Sublette
Sweetwater
Teton
Uinta
Washakie
Weston

PART 1074—PREEMPTION OF STATE STANDARDS AND PROCEDURES FOR WAIVER OF FEDERAL PREEMPTION FOR NONROAD ENGINES AND NONROAD VEHICLES

Subpart A—Applicability and General Provisions

Sec.
1074.1 Applicability.
1074.5 Definitions.
1074.10 Scope of preemption.
1074.12 Scope of preemption—specific provisions for locomotives and locomotive engines

APPENDIX A TO SUBPART A OF PART 1074—STATE REGULATION OF THE USE AND OPERATION OF NONROAD INTERNAL COMBUSTION ENGINES

Subpart B—Procedures for Authorization

1074.101 Procedures for California nonroad authorization requests.
1074.105 Criteria for granting authorization.
1074.110 Adoption of California standards by other states.
1074.115 Relationship of federal and state standards.

AUTHORITY: 42 U.S.C. 7401–7671q.

SOURCE: 73 FR 59379, Oct. 8, 2008, unless otherwise noted.

Subpart A—Applicability and General Provisions

§ 1074.1 Applicability.

The requirements of this part apply with respect to state and local standards and other requirements relating to the control of emissions from nonroad engines and nonroad vehicles.

§ 1074.5 Definitions.

The definitions in this section apply to this part. As used in this part, all undefined terms have the meaning the Act gives to them. The definitions follow:

Act means the Clean Air Act, as amended, 42 U.S.C. 7401–7671q.

Administrator means the Administrator of the Environmental Protection

Agency and any authorized representatives.

Commercial means an activity engaged in as a vocation.

Construction equipment or vehicle means any internal combustion engine-powered machine primarily used in construction and located on commercial construction sites.

Engine used in a locomotive means either an engine placed in a locomotive to move other equipment, freight, or passenger traffic, or an engine mounted on a locomotive to provide auxiliary power.

Farm equipment or vehicle means any internal combustion engine-powered machine primarily used in the commercial production and/or commercial harvesting of food, fiber, wood, or commercial organic products or for the processing of such products for further use on the farm.

Locomotive means a piece of equipment meeting the definition of locomotive in 40 CFR 1033.901 that is propelled by a nonroad engine.

New has the following meanings:

(1) For locomotives, new has the meaning given in 40 CFR 1033.901.

(2) For engines used in locomotives, new means an engine incorporated in (or intended to be incorporated in) in a new locomotive.

(3) For other nonroad engines and equipment, new means a domestic or imported nonroad engine or nonroad vehicle the equitable or legal title to which has never been transferred to an ultimate purchaser. Where the equitable or legal title to an engine or vehicle is not transferred to an ultimate purchaser until after the engine or vehicle is placed into service, then the engine or vehicle will no longer be new once it is placed into service. A nonroad engine or vehicle is placed into service when it is used for its functional purposes. This paragraph (3) does not apply to locomotives or engines used in locomotives.

Nonroad engine has the meaning given in 40 CFR 1068.30

Primarily used means used 51 percent or more.

States and localities means any or all of the states, commonwealths, and territories in the United States including the District of Columbia and any or all of their political subdivisions.

Ultimate purchaser means the first person who in good faith purchases a new nonroad engine or new nonroad vehicle or equipment for purposes other than resale.

United States has the meaning given in 40 CFR 1068.30.

§ 1074.10 Scope of preemption.

(a) States and localities are preempted from adopting or enforcing standards or other requirements relating to the control of emissions from new engines smaller than 175 horsepower that are primarily used in farm or construction equipment or vehicles, as defined in this part. For equipment that is used in applications in addition to farming or construction activities, if the equipment is primarily used as farm and/or construction equipment or vehicles (as defined in this part), it is considered farm or construction equipment or vehicles.

(b) For nonroad engines or vehicles other than those described in paragraph (a) of this section and § 1074.12, States and localities are preempted from enforcing any standards or other requirements relating to control of emissions from nonroad engines or vehicles except as provided in subpart B of this part.

§ 1074.12 Scope of preemption-specific provisions for locomotives and locomotive engines

(a) States and localities are preempted from adopting or enforcing standards or other requirements relating to the control of emissions from new locomotives and new engines used in locomotives.

(b) During a period equivalent in length to 133 percent of the useful life, expressed as MW-hrs (or miles where applicable), beginning at the point at which the locomotive or engine becomes new, those standards or other requirements which are preempted include, but are not limited to, the following: emission standards, mandatory fleet average standards, certification requirements, retrofit and aftermarket equipment requirements, and nonfederal in-use testing requirements. The standards and other requirements

specified in the preceding sentence are preempted whether applicable to new or other locomotives or locomotive engines.

APPENDIX A TO SUBPART A OF PART 1074—STATE REGULATION OF THE USE AND OPERATION OF NONROAD INTERNAL COMBUSTION ENGINES

(a) This appendix describes EPA's interpretation of the Clean Air Act regarding the authority of states to regulate the use and operation of nonroad engines.

(b) EPA believes that states are not precluded under 42 U.S.C. 7543 from regulating the use and operation of nonroad engines, such as regulations on hours of usage, daily mass emission limits, or sulfur limits on fuel; nor are permits regulating such operations precluded, once the engine is no longer new. EPA believes that states are precluded from requiring retrofitting of used nonroad engines except that states are permitted to adopt and enforce any such retrofitting requirements identical to California requirements which have been authorized by EPA under 42 U.S.C. 7543.

EFFECTIVE DATE NOTE: At 86 FR 34590, June 29, 2021, appendix A to Subpart A of part 1074 was added, effective July 29, 2021.

Subpart B—Procedures for Authorization

§ 1074.101 Procedures for California nonroad authorization requests.

(a) California must request authorization from the Administrator to enforce its adopted standards and other requirements relating to control of emissions from nonroad engines or vehicles that are not preempted by § 1074.10(a) or § 1074.12. The request must include the record on which the state rulemaking was based.

(b) After receiving the authorization request, the Administrator will provide notice and opportunity for a public hearing regarding such requests.

§ 1074.105 Criteria for granting authorization.

(a) The Administrator will grant the authorization if California determines that its standards will be, in the aggregate, at least as protective of public health and welfare as otherwise applicable federal standards.

(b) The authorization will not be granted if the Administrator finds that any of the following are true:

(1) California's determination is arbitrary and capricious.

(2) California does not need such standards to meet compelling and extraordinary conditions.

(3) The California standards and accompanying enforcement procedures are not consistent with section 209 of the Act (42 U.S.C. 7543).

(c) In considering any request from California to authorize the state to adopt or enforce standards or other requirements relating to control of emissions from new nonroad spark-ignition engines smaller than 50 horsepower, the Administrator will give appropriate consideration to safety factors (including the potential increased risk of burn or fire) associated with compliance with the California standard.

§ 1074.110 Adoption of California standards by other states.

(a) Except as described in paragraph (b) of this section, any state other than California that has plan provisions approved under Part D of Title I of the Act (42 U.S.C. 7501 to 7515) may adopt and enforce emission standards for any period for nonroad engines and vehicles subject to the following requirements:

(1) The state must provide notice to the Administrator that it has adopted such standards.

(2) Such standards may not apply to new engines smaller than 175 horsepower that are used in farm or construction equipment or vehicles, or to new locomotives or new engines used in locomotives.

(3) Such standards and implementation and enforcement must be identical, for the period concerned, to the California standards authorized by the Administrator.

(4) The state must adopt such standards at least two years before the standards first take effect.

(5) California must have adopted such standards two years before the standards first take effect in the state that is adopting them under this section.

(b) States and localities, other than the State of California, may not adopt or attempt to enforce any standard or other requirement applicable to the

control of emissions from spark-ignition engines smaller than 50 horsepower, except standards or other requirements that were adopted by that state before September 1, 2003.

§ 1074.115 Relationship of federal and state standards.

If state standards apply to a new nonroad engine or vehicle pursuant to authorization granted under section 209 of the Act (42 U.S.C. 7543), compliance with such state standards will be treated as compliance with the otherwise applicable standards of this chapter for engines or vehicles introduced into commerce in that state.

PARTS 1075–1089 [RESERVED]

PART 1090—REGULATION OF FUELS, FUEL ADDITIVES, AND REGULATED BLENDSTOCKS

Subpart A—General Provisions

Sec.
1090.1 Applicability and relationship to other parts.
1090.5 Implementation dates.
1090.10 Contacting EPA.
1090.15 Confidential business information.
1090.20 Approval of submissions under this part.
1090.50 Rounding.
1090.55 Requirements for independent parties.
1090.80 Definitions.
1090.85 Explanatory terms.
1090.90 Acronyms and abbreviations.
1090.95 Incorporation by reference.

Subpart B—General Requirements and Provisions for Regulated Parties

1090.100 General provisions.
1090.105 Fuel manufacturers.
1090.110 Detergent blenders.
1090.115 Oxygenate blenders.
1090.120 Oxygenate producers.
1090.125 Certified butane producers.
1090.130 Certified butane blenders.
1090.135 Certified pentane producers.
1090.140 Certified pentane blenders.
1090.145 Transmix processors.
1090.150 Transmix blenders.
1090.155 Fuel additive manufacturers.
1090.160 Distributors, carriers, and resellers.
1090.165 Retailers and WPCs.
1090.170 Independent surveyors.
1090.175 Auditors.
1090.180 Pipeline operators.

Subpart C—Gasoline Standards

1090.200 Overview and general requirements.
1090.205 Sulfur standards.
1090.210 Benzene standards.
1090.215 Gasoline RVP standards.
1090.220 RFG standards.
1090.225 Anti-dumping standards.
1090.230 Limitation on use of gasoline-ethanol blends.
1090.250 Certified butane standards.
1090.255 Certified pentane standards.
1090.260 Gasoline deposit control standards.
1090.265 Gasoline additive standards.
1090.270 Gasoline oxygenate standards.
1090.275 Ethanol denaturant standards.
1090.285 RFG covered areas.
1090.290 Changes to RFG covered areas and procedures for opting out of RFG.
1090.295 Procedures for relaxing the federal 7.8 psi RVP standard.

Subpart D—Diesel Fuel and ECA Marine Fuel Standards

1090.300 Overview and general requirements.
1090.305 ULSD standards.
1090.310 Diesel fuel additives standards.
1090.315 Heating oil, kerosene, ECA marine fuel, and jet fuel provisions.
1090.320 500 ppm LM diesel fuel standards.
1090.325 ECA marine fuel standards.

Subpart E [Reserved]

Subpart F—Transmix and Pipeline Interface Provisions

1090.500 Gasoline produced from blending transmix into PCG.
1090.505 Gasoline produced from TGP.
1090.510 Diesel and distillate fuel produced from TDP.
1090.515 500 ppm LM diesel fuel produced from TDP.
1090.520 Handling practices for pipeline interface that is not transmix.

Subpart G—Exemptions, Hardships, and Special Provisions

1090.600 General provisions.
1090.605 National security and military use exemptions.
1090.610 Temporary research, development, and testing exemptions.
1090.615 Racing and aviation exemptions.
1090.620 Exemptions for Guam, American Samoa, and the Commonwealth of the Northern Mariana Islands.
1090.625 Exemptions for California gasoline and diesel fuel.
1090.630 Exemptions for Alaska, Hawaii, Puerto Rico, and the U.S. Virgin Islands summer gasoline.
1090.635 Refinery extreme unforeseen hardship exemption.

1090.640 Exemptions from the gasoline deposit control requirements.
1090.645 Exemption for exports of fuels, fuel additives, and regulated blendstocks.
1090.650 Distillate global marine fuel exemption.

Subpart H—Averaging, Banking, and Trading Provisions

1090.700 Compliance with average standards.
1090.705 Facility level compliance.
1090.710 Downstream oxygenate accounting.
1090.715 Deficit carryforward.
1090.720 Credit use.
1090.725 Credit generation.
1090.730 Credit transfers.
1090.735 Invalid credits and remedial actions.
1090.740 Downstream BOB recertification.
1090.745 Informational annual average calculations.

Subpart I—Registration

1090.800 General provisions.
1090.805 Contents of registration.
1090.810 Voluntary cancellation of company or facility registration.
1090.815 Deactivation (involuntary cancellation) of registration.
1090.820 Changes of ownership.

Subpart J—Reporting

1090.900 General provisions.
1090.905 Annual, batch, and credit transaction reporting for gasoline manufacturers.
1090.910 Reporting for gasoline manufacturers that recertify BOB to gasoline.
1090.915 Batch reporting for oxygenate producers and importers.
1090.920 Reports by certified pentane producers.
1090.925 Reports by independent surveyors.
1090.930 Reports by auditors.
1090.935 Reports by diesel fuel manufacturers.

Subpart K—Batch Certification and Designation

1090.1000 Batch certification requirements.
1090.1005 Designation of batches of fuels, fuel additives, and regulated blendstocks.
1090.1010 Designation requirements for gasoline and regulated blendstocks.
1090.1015 Designation requirements for diesel and distillate fuels.
1090.1020 Batch numbering.

Subpart L—Product Transfer Documents

1090.1100 General requirements.
1090.1105 PTD requirements for exempt fuels.
1090.1110 PTD requirements for gasoline, gasoline additives, and gasoline regulated blendstocks.
1090.1115 PTD requirements for distillate and residual fuels.
1090.1120 PTD requirements for diesel fuel additives.
1090.1125 Alternative PTD language.

Subpart M—Recordkeeping

1090.1200 General recordkeeping requirements.
1090.1205 Recordkeeping requirements for all regulated parties.
1090.1210 Recordkeeping requirements for gasoline manufacturers.
1090.1215 Recordkeeping requirements for diesel fuel, ECA marine fuel, and distillate global marine fuel manufacturers.
1090.1220 Recordkeeping requirements for oxygenate blenders.
1090.1225 Recordkeeping requirements for gasoline additives.
1090.1230 Recordkeeping requirements for oxygenate producers.
1090.1235 Recordkeeping requirements for ethanol denaturant.
1090.1240 Recordkeeping requirements for gasoline detergent blenders.
1090.1245 Recordkeeping requirements for independent surveyors.
1090.1250 Recordkeeping requirements for auditors.
1090.1255 Recordkeeping requirements for transmix processors, transmix blenders, transmix distributors, and pipeline operators.

Subpart N—Sampling, Testing, and Retention

1090.1300 General provisions.

SCOPE OF TESTING

1090.1310 Testing to demonstrate compliance with standards.
1090.1315 In-line blending.
1090.1320 Adding blendstock to PCG.
1090.1325 Adding blendstock or PCG to TGP.
1090.1330 Preparing denatured fuel ethanol.

HANDLING AND PREPARING SAMPLES

1090.1335 Collecting, preparing, and testing samples.
1090.1337 Demonstrating homogeneity.
1090.1340 Preparing a hand blend from BOB.
1090.1345 Retaining samples.

MEASUREMENT PROCEDURES

1090.1350 Overview of test procedures.
1090.1355 Calculation adjustments and corrections.
1090.1360 Performance-based Measurement System.
1090.1365 Qualifying criteria for alternative measurement procedures.

1090.1370 Qualifying criteria for reference installations.
1090.1375 Quality control procedures.

TESTING RELATED TO GASOLINE DEPOSIT CONTROL

1090.1390 Requirement for Automated Detergent Blending Equipment Calibration.
1090.1395 Gasoline deposit control test procedures.

Subpart O—Survey Provisions

1090.1400 General provisions.
1090.1405 National fuels survey program.
1090.1410 Independent surveyor requirements.
1090.1415 Survey program plan design requirements.
1090.1420 Additional requirements for E15 misfueling mitigation surveying.
1090.1450 National sampling and testing oversight program.

Subpart P—Retailer and Wholesale Purchaser-Consumer Provisions

1090.1500 Overview.

LABELING

1090.1510 E15 labeling provisions.
1090.1515 Diesel sulfur labeling provisions.

REFUELING HARDWARE

1090.1550 Requirements for gasoline dispensing nozzles used with motor vehicles.
1090.1555 Requirements for gasoline dispensing nozzles used primarily with marine vessels.
1090.1560 Requirements related to dispensing natural gas.
1090.1565 Requirements related to dispensing liquefied petroleum gas.

Subpart Q—Importer and Exporter Provisions

1090.1600 General provisions for importers.
1090.1605 Importation by marine vessel.
1090.1610 Importation by rail or truck.
1090.1615 Gasoline treated as a blendstock.
1090.1650 General provisions for exporters.

Subpart R—Compliance and Enforcement Provisions

1090.1700 Prohibited acts.
1090.1705 Evidence related to violations.
1090.1710 Penalties.
1090.1715 Liability provisions.
1090.1720 Affirmative defense provisions.

Subpart S—Attestation Engagements

1090.1800 General provisions.
1090.1805 Representative samples.
1090.1810 General procedures for gasoline manufacturers.
1090.1815 General procedures for gasoline importers.
1090.1820 Additional procedures for gasoline treated as blendstock.
1090.1825 Additional procedures for PCG used to produce gasoline.
1090.1830 Alternative procedures for certified butane blenders.
1090.1835 Alternative procedures for certified pentane blenders.
1090.1840 Additional procedures related to compliance with gasoline average standards.
1090.1845 Procedures related to meeting performance-based measurement and statistical quality control for test methods.
1090.1850 Procedures related to in-line blending waivers.

AUTHORITY: 42 U.S.C. 7414, 7521, 7522–7525, 7541, 7542, 7543, 7545, 7547, 7550, and 7601.

SOURCE: 85 FR 78469, Dec. 4, 2020, unless otherwise noted.

Subpart A—General Provisions

§ 1090.1 Applicability and relationship to other parts.

(a) This part specifies fuel quality standards for gasoline and diesel fuel introduced into commerce in the United States. Additional requirements apply for fuel used in certain marine applications, as specified in paragraph (b) of this section.

(1) The regulations include standards for fuel parameters that directly or indirectly affect vehicle, engine, and equipment emissions, air quality, and public health. The regulations also include standards and requirements for fuel additives and regulated blendstocks that are components of the fuels regulated under this part.

(2) This part also specifies requirements for any person that engages in activities associated with the production, distribution, storage, and sale of fuels, fuel additives, and regulated blendstocks, such as collecting and testing samples for regulated parameters, reporting information to EPA to demonstrate compliance with fuel quality requirements, and performing other compliance measures to implement the standards. A party that produces and distributes other related products, such as heating oil, may need

to meet certain reporting, recordkeeping, labeling, or other requirements of this part.

(b)(1) The International Convention for the Prevention of Pollution from Ships, 1973 as modified by the Protocol of 1978 Annex VI (''MARPOL Annex VI'') is an international treaty that sets maximum sulfur content for fuel used in marine vessels, including separate standards for marine vessels navigating in a designated Emission Control Area (ECA). These standards and related requirements are specified in 40 CFR part 1043. This part also sets corresponding sulfur standards that apply to any person who produces or handles ECA marine fuel.

(2) This part also includes requirements for parties involved in the production and distribution of IMO marine fuel, such as collecting and testing samples of fuels for regulated parameters, reporting information to EPA to demonstrate compliance with fuel quality requirements, and performing other compliance measures to implement the standards.

(c) The requirements for the registration of fuel and fuel additives under 42 U.S.C. 7545(a), (b), and (e) are specified in 40 CFR part 79. A party that must meet the requirements of this part may also need to comply with the requirements for the registration of fuel and fuel additives under 40 CFR part 79.

(d) The requirements for the Renewable Fuel Standard (RFS) are specified in 40 CFR part 80, subpart M. A party that must meet the requirements of this part may also need to comply with the requirements for the RFS program under 40 CFR part 80, subpart M.

(e) Nothing in this part is intended to preempt the ability of state or local governments to control or prohibit any fuel or fuel additive for use in motor vehicles and motor vehicle engines that is not explicitly regulated by this part.

§ 1090.5 Implementation dates.

(a) The provisions of this part apply beginning January 1, 2021, unless otherwise specified.

(b) The following provisions of 40 CFR part 80 are applicable after December 31, 2020:

(1) Gasoline sulfur and benzene credit balances and deficits from the 2020 compliance period carry forward for demonstrating compliance with requirements of this part. Any restrictions that apply to credits and deficits under 40 CFR part 80, such as a maximum credit life of 5 years, continue to apply under this part.

(2) Unless otherwise specified (*e.g.*, in-line blending waivers for gasoline as specified in paragraph (b)(8) of this section), any approval granted under 40 CFR part 80 continues to be in effect under this part. For example, if EPA approved the use of an alternative label under 40 CFR part 80, that approval continues to be valid under this part, subject to any conditions specified for the approval.

(3) Unless otherwise specified, a regulated party must use the provisions of 40 CFR part 80 in 2021 to demonstrate compliance with regulatory requirements for the 2020 calendar year. This applies to calculating credits for the 2020 compliance period, and to any sampling, testing, reporting, and auditing related to fuels, fuel additives, and regulated blendstocks produced or imported in 2020.

(4) Any testing to establish the precision and accuracy of alternative test procedures under 40 CFR part 80 continues to be valid under this part.

(5) Requirements to keep records and retain fuel samples related to actions taken before January 1, 2021, continue to be in effect, as specified in 40 CFR part 80.

(6) A party may comply with the PTD requirements of 40 CFR part 80 instead of the requirements of subpart L of this part until May 1, 2021.

(7) A party may comply with the automatic sampling provisions of 40 CFR 80.8 instead of the requirements in § 1090.1335(c) until January 1, 2022.

(8) A gasoline manufacturer may operate under an in-line blending waiver issued under 40 CFR part 80 until January 1, 2022, or until EPA approves a revised in-line blending waiver under § 1090.1315, whichever is earlier. The following provisions apply:

(i) A gasoline manufacturer operating under an in-line blending waiver under 40 CFR 80.65 must monitor and

test for sulfur content, benzene content, and for summer gasoline, RVP, and may discontinue monitoring and testing for other properties that are included in their in-line blending waiver.

(ii) The auditing requirements in § 1090.1850 do not apply to an in-line blending waiver issued under 40 CFR part 80.

(c) The following requirements apply for the 2021 compliance period:

(1) The NSTOP specified in § 1090.1450 must begin no later than June 1, 2021.

(2) A gasoline manufacturer that accounts for oxygenate added downstream under § 1090.710 is deemed compliant with the requirement to participate in the NSTOP specified in § 1090.710(a)(3) until June 1, 2021, if the gasoline manufacturer meets all other applicable requirements specified in § 1090.710.

(3) The independent surveyor conducting the NSTOP must submit the proof of contract required under § 1090.1400(b) no later than April 15, 2021.

(4) The independent surveyor may collect only one summer or winter gasoline sample for each participating fuel manufacturing facility instead of the minimum two samples required under § 1090.1450(c)(2)(i).

§ 1090.10 Contacting EPA.

A party must submit all reports, registrations, and documents for approval required under this part electronically to EPA using forms and procedures specified by EPA via the following website: *https://www.epa.gov/fuels-registration-reporting-and-compliance-help*.

§ 1090.15 Confidential business information.

(a) Except as specified in paragraphs (b) and (c) of this section, any information submitted under this part claimed as confidential remains subject to evaluation by EPA under 40 CFR part 2, subpart B.

(b) The following information contained in submissions under this part is not entitled to confidential treatment under 40 CFR part 2, subpart B or 5 U.S.C. 552(b)(4):

(1) Submitter's name.

(2) The name and location of the facility, if applicable.

(3) The general nature of a request.

(4) The relevant time period for a request, if applicable.

(c) The following information incorporated into EPA determinations on submissions under this section is not entitled to confidential treatment under 40 CFR part 2, subpart B or 5 U.S.C. 552(b)(4):

(1) Submitter's name.

(2) The name and location of the facility, if applicable.

(3) The general nature of a request.

(4) The relevant time period for a request, if applicable.

(5) The extent to which EPA either granted or denied the request and any relevant terms and conditions.

(d) EPA may disclose the information specified in paragraphs (b) and (c) of this section on its website, or otherwise make it available to interested parties, without additional notice, notwithstanding any claims that the information is entitled to confidential treatment under 40 CFR part 2, subpart B and 5 U.S.C. 552(b)(4).

§ 1090.20 Approval of submissions under this part.

(a) EPA may approve any submission required or allowed under this part if the request for approval satisfies all specified requirements.

(b) EPA may impose terms and conditions on any approval of any submission required or allowed under this part.

(c) EPA will deny any request for approval if the submission is incomplete, contains inaccurate or misleading information, or does not meet all specified requirements.

(d) EPA may revoke any prior approval under this part for cause. For cause includes, but is not limited to, any of the following:

(1) The approval has proved inadequate in practice.

(2) The party fails to notify EPA if information that the approval was based on substantively changed after the approval was granted.

(e) EPA may also revoke and void any approval under this part effective from the approval date for cause. Cause for voiding an approval includes, but is not limited to, any of the following:

(1) The approval was not fully or diligently implemented.

(2) The approval was based on false, misleading, or inaccurate information.

(3) Failure of a party to fulfill or cause to be fulfilled any term or condition of an approval under this part.

(f) Any person that has an approval revoked or voided under this part is liable for any resulting violation of the requirements of this part.

§ 1090.50 Rounding.

(a) Unless otherwise specified, round values to the number of significant digits necessary to match the number of decimal places of the applicable standard or specification. Perform all rounding as specified in 40 CFR 1065.20(e)(1) through (6). This convention is consistent with ASTM E29 and NIST SP 811.

(b) Do not round intermediate values to transfer data unless the rounded number has at least 6 significant digits.

(c) When calculating a specified percentage of a given value, the specified percentage is understood to have infinite precision. For example, if an allowable limit is specified as a fuel volume representing 1 percent of total volume produced, calculate the allowable volume by multiplying total volume by exactly 0.01.

(d) Measurement devices that incorporate internal rounding may be used, consistent with the following provisions:

(1) Devices may use any rounding convention if they report 6 or more significant digits.

(2) Devices that report fewer than 6 significant digits may be used, consistent with the accuracy and repeatability specifications of the procedures specified in subpart N of this part.

(e) Use one of the following rounding conventions for all batch volumes in a given compliance period, and for all reporting under this part:

(1) Identify batch volume in gallons to the nearest whole gallon.

(2)(i) Round batch volumes between 1,000 and 11,000 gallons to the nearest 10 gallons.

(ii) Round batch volumes above 11,000 gallons to the nearest 100 gallons.

§ 1090.55 Requirements for independent parties.

This section specifies how a third party demonstrates their independence from the regulated party that hires them and their technical ability to perform the specified services.

(a) *Independence.* The independent third party, their contractors, subcontractors, and their organizations must be independent of the regulated party. All the criteria listed in paragraphs (a)(1) and (2) of this section must be met by each person involved in the specified activities in this part that the independent third party is hired to perform for a regulated party, except that an internal auditor may instead meet the requirements in § 1090.1800(b)(1)(i).

(1) *Employment criteria.* No person employed by an independent third party, including contractor and subcontractor personnel, who is involved in a specified activity performed by the independent third party under the provisions of this part, may be employed, currently or previously, by the regulated party for any duration within the 12 months preceding the date when the regulated party hired the independent third party to provide services under this part.

(2) *Financial criteria.* (i) The third-party's personnel, the third-party's organization, or any organization or individual that may be contracted or subcontracted by the third party must meet all the following requirements:

(A) Have received no more than one-quarter of their revenue from the regulated party during the year prior to the date of hire of the third party by the regulated party for any purpose.

(B) Have no interest in the regulated party's business. Income received from the third party to perform specified activities under this part is excepted.

(C) Not receive compensation for any specified activity in this part that is dependent on the outcome of the specified activity.

(ii) The regulated party must be free from any interest in the third-party's business.

(b) *Technical ability.* The third party must meet all the following requirements in order to demonstrate their

technical capability to perform specified activities under this part:

(1) An independent surveyor that conducts a survey under subpart O of this part must have personnel familiar with petroleum marketing, the sampling and testing of gasoline and diesel fuel at retail stations, and the designing of surveys to estimate compliance rates for fuel parameters nationwide. The independent surveyor must demonstrate this technical ability in plans submitted under subpart O of this part.

(2) A laboratory attempting to qualify alternative procedures must contract with an independent third party to verify the accuracy and precision of measured values as specified in § 1090.1365. The independent third party must demonstrate work experience and a good working knowledge of the VCSB methods specified in §§ 1090.1365 and 1090.1370, with training and expertise corresponding to a bachelor's degree in chemical engineering, or combined bachelor's degrees in chemistry and statistics.

(3) Any person auditing in-line blending operations must demonstrate work experience and be proficient in the VCSB methods specified in §§ 1090.1365 and 1090.1370.

(c) *Suspension and disbarment*. Any person suspended or disbarred under 40 CFR part 32 or 48 CFR part 9, subpart 9.4, is not qualified to perform review functions under this part.

§ 1090.80 Definitions.

500 ppm LM diesel fuel means diesel fuel subject to the alternative sulfur standards in § 1090.320 that is produced by a transmix processor under § 1090.515.

Additization means the addition of detergent to gasoline to create detergent-additized gasoline.

Aggregated import facility means all import facilities within a PADD owned or operated by an importer and treated as a single fuel manufacturing facility in order to comply with the maximum benzene average standards under § 1090.210(b).

Anhydrous ethanol means ethanol that contains no more than 1.0 volume percent water.

Auditor means any person that conducts audits under subpart S of this part.

Automated detergent blending facility means any facility (including, but not limited to, a truck or individual storage tank) at which detergents are blended with gasoline by means of an injector system calibrated to automatically deliver a specified amount of detergent.

Average standard means a fuel standard applicable over a compliance period.

Batch means a quantity of fuel, fuel additive, or regulated blendstock that has a homogeneous set of properties. This also includes fuel, fuel additive, or regulated blendstock for which homogeneity testing is not required under § 1090.1337(a).

Biodiesel means a diesel fuel composed of mono-alkyl esters made from nonpetroleum feedstocks.

Blender pump means any fuel dispenser where PCG is blended with E85 (made only with PCG and DFE) or DFE to produce gasoline that has an ethanol content greater than that of the PCG. A fuel dispenser that produces gasoline with anything other than PCG and DFE (*e.g.*, natural gas liquids) is a fuel blending facility.

Blending manufacturer means any person who owns, leases, operates, controls, or supervises a fuel blending facility in the United States.

Blendstock means any liquid compound or mixture of compounds (not including fuel or fuel additive) that is used or intended for use as a component of a fuel.

Business day means Monday through Friday, except the legal public holidays specified in 5 U.S.C. 6103 or any other day declared to be a holiday by federal statute or executive order.

Butane means an organic compound with the formula C_4H_{10}.

Butane blending facility means a fuel manufacturing facility where butane is blended into PCG.

California diesel means diesel fuel designated by a diesel fuel manufacturer as for use in California.

California gasoline means gasoline designated by a gasoline manufacturer as for use in California.

Carrier means any distributor who transports or stores or causes the transportation or storage of fuel, fuel additive, or regulated blendstock without taking title to or otherwise having any ownership of the fuel, fuel additive, or regulated blendstock, and without altering either the quality or quantity of the fuel, fuel additive, or regulated blendstock.

Category 1 (C1) marine vessel means a vessel that is propelled by an engine(s) that meets the definition of ''Category 1'' in 40 CFR part 1042.901.

Category 2 (C2) marine vessel means a vessel that is propelled by an engine(s) that meets the definition of ''Category 2'' in 40 CFR part 1042.901.

Category 3 (C3) marine vessel means a vessel that is propelled by an engine(s) that meets the definition of ''Category 3'' in 40 CFR part 1042.901.

CBOB means a BOB produced or imported for use outside of an RFG covered area.

Certified butane means butane that is certified to meet the requirements in § 1090.250.

Certified butane blender means a blending manufacturer that produces gasoline by blending certified butane into PCG and that uses the provisions of § 1090.1320(b) to meet the applicable sampling and testing requirements.

Certified butane producer means a regulated blendstock producer that certifies butane as meeting the requirements in § 1090.250.

Certified ethanol denaturant means ethanol denaturant that is certified to meet the requirements in § 1090.275.

Certified ethanol denaturant producer means any person that certifies ethanol denaturant as meeting the requirements in § 1090.275.

Certified non-transportation 15 ppm distillate fuel or *certified NTDF* has the meaning given in 40 CFR 80.1401.

Certified pentane means pentane that is certified to meet the requirements in § 1090.255.

Certified pentane blender means a blending manufacturer that produces gasoline by blending certified pentane into PCG and that uses the provisions of § 1090.1320 to meet the applicable sampling and testing requirements.

Certified pentane producer means a regulated blendstock producer that certifies pentane as meeting the requirements in § 1090.255.

Compliance period means the calendar year (January 1 through December 31).

Conventional gasoline (CG) means gasoline that is not certified to meet the requirements for RFG in § 1090.220.

Crosscheck program means an arrangement for laboratories to perform measurements from test samples prepared from a single homogeneous fuel batch to establish an accepted reference value for evaluating accuracy of individual laboratories and measurement systems.

Days means calendar days, including weekends and holidays.

Denatured fuel ethanol (DFE) means anhydrous ethanol that contains a denaturant to make it unfit for human consumption, that is produced or imported for use in gasoline, and that meets the standards and requirements in § 1090.270.

Detergent means any chemical compound or combination of chemical compounds that is added to gasoline to control deposit formation and meets the requirements in § 1090.260. Detergent may be part of a detergent additive package.

Detergent additive package means an additive package containing detergent and may also contain carrier oils and non-detergent-active components such as corrosion inhibitors, antioxidants, metal deactivators, and handling solvents.

Detergent blender means any person who owns, leases, operates, controls, or supervises the blending operation of a detergent blending facility, or imports detergent-additized gasoline.

Detergent blending facility means any facility (including, but not limited to, a truck or individual storage tank) at which detergent is blended with gasoline.

Detergent manufacturer means any person who owns, leases, operates, controls, or supervises a facility that produces detergent. A detergent manufacturer is a fuel additive manufacturer.

Detergent-additized gasoline or *detergent gasoline* means any gasoline that contains a detergent.

Diesel fuel means any of the following:

(1) Any fuel commonly or commercially known as diesel fuel.

(2) Any fuel (including NP diesel fuel or a fuel blend that contains NP diesel fuel) that is intended or used to power a vehicle or engine that is designed to operate using diesel fuel.

(3) Any fuel that conforms to the specifications of ASTM D975 (incorporated by reference in § 1090.95) and is made available for use in a vehicle or engine designed to operate using diesel fuel.

Diesel fuel manufacturer means a fuel manufacturer that owns, leases, operates, controls, or supervises a fuel manufacturing facility where diesel fuel is produced or imported.

Distillate fuel means diesel fuel and other petroleum fuels with a T90 temperature below 700 °F that can be used in vehicles or engines that are designed to operate using diesel fuel. For example, diesel fuel, jet fuel, heating oil, No. 1 fuel (kerosene), No. 4 fuel, DMX, DMA, DMB, and DMC are distillate fuels. These specific fuel grades are identified in ASTM D975 and ISO 8217. Natural gas, LPG, and gasoline are not distillate fuels. T90 temperature is based on the distillation test method specified in § 1090.1350.

Distributor means any person who transports, stores, or causes the transportation or storage of fuel, fuel additive, or regulated blendstock at any point between any fuel manufacturing facility, fuel additive manufacturing facility, or regulated blendstock production facility and any retail outlet or WPC facility.

Downstream location means any point in the fuel distribution system other than a fuel manufacturing facility through which the fuel passes after it leaves the fuel manufacturing facility gate at which it was certified (*e.g.*, fuel at facilities of distributors, pipelines, terminals, carriers, retailers, oxygenate blenders, and WPCs).

E0 means gasoline that contains no ethanol. This is also known as neat gasoline.

E10 means gasoline that contains at least 9 and no more than 10 volume percent ethanol.

E15 means gasoline that contains more than 10 and no more than 15 volume percent ethanol.

E85 means a fuel that contains more than 50 volume percent but no more than 83 volume percent ethanol and is used, intended for use, or made available for use in flex-fuel vehicles or flex-fuel engines. E85 is not gasoline.

ECA marine fuel means diesel, distillate, or residual fuel used, intended for use, or made available for use in C3 marine vessels while the vessels are operating within an ECA, or an ECA associated area.

Ethanol means an alcohol of the chemical formula C_2H_5OH.

Ethanol denaturant means PCG, gasoline blendstocks, or natural gas liquids that are added to anhydrous ethanol to make the ethanol unfit for human consumption as required and defined in 27 CFR parts 19 through 21.

Facility means any place, or series of places, where any fuel, fuel additive, or regulated blendstock is produced, imported, blended, transported, distributed, stored, or sold.

Flex-fuel engine has the same meaning as *flexible-fuel engine* in 40 CFR 1054.801.

Flex-fuel vehicle has the same meaning as *flexible-fuel vehicle* in 40 CFR 86.1803–01.

Fuel means only the fuels regulated under this part.

Fuel additive means has the same meaning as *additive* in 40 CFR 79.2(e).

Fuel additive blender means any person who blends fuel additive into fuel in the United States, or any person who owns, leases, operates, controls, or supervises such an operation in the United States.

Fuel additive manufacturer means any person who owns, leases, operates, controls, or supervises a facility where fuel additives are produced or imported into the United States.

Fuel blending facility means any facility, other than a refinery or transmix processing facility, where fuel is produced by combining blendstocks or by combining blendstocks with fuel. Types of blending facilities include, but are not limited to, terminals, storage tanks, plants, tanker trucks, retail outlets, and marine vessels.

Fuel dispenser means any apparatus used to dispense fuel into motor vehicles, nonroad vehicles, engines, equipment, or portable fuel containers (as defined in 40 CFR 59.680).

Fuel manufacturer means any person who owns, leases, operates, controls, or supervises a fuel manufacturing facility. Fuel manufacturers include refiners, importers, blending manufacturers, and transmix processors.

Fuel manufacturing facility means any facility where fuels are produced, imported, or recertified. Fuel manufacturing facilities include refineries, fuel blending facilities, transmix processing facilities, import facilities, and any facility where fuel is recertified.

Fuel manufacturing facility gate means the point where the fuel leaves the fuel manufacturing facility at which the fuel manufacturer certified the fuel.

Gasoline means any of the following:

(1) Any fuel commonly or commercially known as gasoline, including BOB.

(2) Any fuel intended or used to power a vehicle or engine designed to operate on gasoline.

(3) Any fuel that conforms to the specifications of ASTM D4814 (incorporated by reference in §1090.95) and is made available for use in a vehicle or engine designed to operate on gasoline.

Gasoline before oxygenate blending (BOB) means gasoline for which a gasoline manufacturer has accounted for oxygenate added downstream under §1090.710. BOB is subject to all requirements and standards that apply to gasoline, unless subject to a specific alternative standard or requirement under this part.

Gasoline manufacturer means a fuel manufacturer that owns, leases, operates, controls, or supervises a fuel manufacturing facility where gasoline is produced, imported, or recertified.

Gasoline regulated blendstock means a regulated blendstock that is used or intended for use as a component of gasoline.

Gasoline treated as blendstock (GTAB) means a gasoline regulated blendstock that is imported and used to produce gasoline as specified in §1090.1615.

Global marine fuel means diesel fuel, distillate fuel, or residual fuel used, intended for use, or made available for use in steamships or Category 3 marine vessels while the vessels are operating in international waters or in any waters outside the boundaries of an ECA. Global marine fuel is subject to the provisions of MARPOL Annex VI. (Note: This part regulates global marine fuel only if it qualifies as a distillate fuel.)

Heating oil means a combustible product that is used, intended for use, or made available for use in furnaces, boilers, or similar applications. Kerosene and jet fuel are not heating oil.

IMO marine fuel means fuel that is ECA marine fuel or global marine fuel.

Importer means any person who imports fuel, fuel additive, or regulated blendstock into the United States.

Import facility means any facility where an importer imports fuel, fuel additive, or regulated blendstock.

Independent surveyor means any person who meets the independence requirements in §1090.55 and conducts a survey under subpart O of this part.

Intake valve deposits (IVD) means the deposits formed on the intake valve(s) of a gasoline-fueled engine during operation.

Jet fuel means any distillate fuel used, intended for use, or made available for use in aircraft.

Kerosene means any No. 1 distillate fuel that is used, intended for use, or made available for use as kerosene.

Liquefied petroleum gas (LPG) means a liquid hydrocarbon fuel that is stored under pressure and is composed primarily of compounds that are gases at atmospheric conditions (temperature = 25 °C and pressure = 1 atm), excluding natural gas.

Locomotive engine means an engine used in a locomotive as defined in 40 CFR 92.2.

Marine engine has the meaning given under 40 CFR 1042.901.

Methanol means any fuel sold for use in motor vehicles and engines and commonly known or commercially sold as methanol or MXX, where XX represents the percent methanol (CH_3OH) by volume.

Natural gas means a fuel that is primarily composed of methane.

Natural gas liquids (NGLs) means natural gasoline or other mixtures of hydrocarbons (primarily but not limited

to propane, butane, pentane, hexane, and heptane) that are separated from the gaseous state of natural gas in the form of liquids at a facility, such as a natural gas production facility, gas processing plant, natural gas pipeline, refinery, or similar facility.

Non-automated detergent blending facility means any facility (including a truck or individual storage tank) at which detergent additive is blended using a hand blending technique or any other non-automated method.

Nonpetroleum (NP) diesel fuel means renewable diesel fuel or biodiesel. NP diesel fuel also includes other renewable fuel under 40 CFR part 80, subpart M, that is used or intended for use to power a vehicle or engine that is designed to operate using diesel fuel or that is made available for use in a vehicle or engine designed to operate using diesel fuel.

Oxygenate means a liquid compound that consists of one or more oxygenated compounds. Examples include DFE and isobutanol.

Oxygenate blender means any person who adds oxygenate to gasoline in the United States, or any person who owns, leases, operates, controls, or supervises such an operation in the United States.

Oxygenate blending facility means any facility (including but not limited to a truck) at which oxygenate is added to gasoline (including BOB), and at which the quality or quantity of gasoline is not altered in any other manner except for the addition of deposit control additives.

Oxygenate import facility means any facility where oxygenate, including DFE, is imported into the United States.

Oxygenate producer means any person who produces or imports oxygenate for gasoline in the United States, or any person who owns, leases, operates, controls, or supervises an oxygenate production or import facility in the United States.

Oxygenate production facility means any facility where oxygenate is produced, including DFE.

Oxygenated compound means an oxygen-containing, ashless organic compound, such as an alcohol or ether, which may be used as a fuel or fuel additive.

PADD means Petroleum Administration for Defense District. These districts are the same as the PADDs used by other federal agencies, except for the addition of PADDs VI and VII. The individual PADDs are identified by region, state, and territory as follows:

PADD	Regional description	State or territory
I	East Coast	Connecticut, Delaware, District of Columbia, Florida, Georgia, Maine, Maryland, Massachusetts, New Hampshire, New Jersey, New York, North Carolina, Pennsylvania, Rhode Island, South Carolina, Vermont, Virginia, West Virginia.
II	Midwest	Illinois, Indiana, Iowa, Kansas, Kentucky, Michigan, Minnesota, Missouri.
III	Gulf Coast	Alabama, Arkansas, Louisiana, Mississippi, New Mexico, Texas.
IV	Rocky Mountain	Colorado, Idaho, Montana, Utah, Wyoming.
V	West Coast	Alaska, Arizona, California, Hawaii, Nevada, Oregon, Washington.
VI	Antilles	Puerto Rico, U.S. Virgin Islands.
VII	Pacific Territories	American Samoa, Guam, Northern Mariana Islands.

Pentane means an organic compound with the formula C_5H_{12}.

Pentane blending facility means a fuel manufacturing facility where pentane is blended into PCG.

Per-gallon standard means the maximum or minimum value for any parameter that applies to every volume unit of a specified fuel, fuel additive, or regulated blendstock.

Person has the meaning given in 42 U.S.C. 7602(e).

Pipeline interface means the mixture between different fuels and products that abut each other during shipment by a refined petroleum products pipeline system.

Pipeline operator means any person who owns, leases, operates, controls, or supervises a pipeline that transports fuel, fuel additive, or regulated blendstock in the United States.

Previously certified gasoline (PCG) means CG, RFG, or BOB that has been

certified as a batch by a gasoline manufacturer.

Product transfer documents (PTDs) mean documents that reflect the transfer of title or physical custody of fuel, fuel additive, or regulated blendstock (*e.g.*, invoices, receipts, bills of lading, manifests, pipeline tickets) between a transferor and a transferee.

RBOB means a BOB produced or imported for use in an RFG covered area.

Refiner means any person who owns, leases, operates, controls, or supervises a refinery in the United States.

Refinery means a facility where fuels are produced from feedstocks, including crude oil or renewable feedstocks, through physical or chemical processing equipment.

Reformulated gasoline (RFG) means gasoline that is certified under §1090.1000(b) and that meets each of the standards and requirements in §1090.220.

Regulated blendstock means certified butane, certified pentane, TGP, TDP, and GTAB.

Regulated blendstock producer means any person who owns, leases, operates, controls, or supervises a facility where regulated blendstocks are produced or imported.

Renewable diesel fuel means diesel fuel that is made from renewable (nonpetroleum) feedstocks and is not a monoalkyl ester.

Reseller means any person who purchases fuel identified by the corporate, trade, or brand name of a fuel manufacturer from such manufacturer or a distributor and resells or transfers it to a retailer or WPC, and whose assets or facilities are not substantially owned, leased, or controlled by such manufacturer.

Residual fuel means a petroleum fuel with a T90 temperature at or above 700 °F. For example, No. 5 fuels and No. 6 fuels are residual fuels. Residual fuel grades are specified in ASTM D396 and ISO 8217. T90 temperature is based on the distillation test method specified in §1090.1350.

Responsible corporate officer (RCO) means a person who is authorized by the regulated party to make representations on behalf of, or obligate the company as ultimately responsible for, any activity regulated under this part (*e.g.*, refining, importing, blending). An example is an officer of a corporation under the laws of incorporation of the state in which the company is incorporated. Examples of positions in noncorporate business structures that qualify are owner, chief executive officer, president, or operations manager.

Retail outlet means any establishment at which fuel is sold or offered for sale for use in motor vehicles, nonroad engines, nonroad vehicles, or nonroad equipment, including locomotive or marine engines.

Retailer means any person who owns, leases, operates, controls, or supervises a retail outlet.

RFG covered area means the geographic areas specified in §1090.285 in which only RFG may be sold or dispensed to ultimate consumers.

RFG opt-in area means an area that becomes a covered area under 42 U.S.C. 7545(k)(6) as listed in §1090.285.

Round (rounded, rounding) has the meaning given in §1090.50.

Sampling strata means the three types of areas sampled during a survey, which include the following:

(1) Densely populated areas.

(2) Transportation corridors.

(3) Rural areas.

State Implementation Plan (SIP) means a plan approved or promulgated under 42 U.S.C. 7410 or 7502.

Summer gasoline means gasoline that is subject to the RVP standards in §1090.215.

Summer season or *high ozone season* means the period from June 1 through September 15 for retailers and WPCs, and May 1 through September 15 for all other persons, or an RVP control period specified in a SIP if it is longer.

Tank truck means a truck used for transporting fuel, fuel additive, or regulated blendstock.

Transmix means any of the following mixtures of fuels, which no longer meet the specifications for a fuel that can be used or sold as a fuel without further processing:

(1) Pipeline interface that is not cut into the adjacent products.

(2) Mixtures produced by unintentionally combining gasoline and distillate fuels.

(3) Mixtures of gasoline and distillate fuel produced from normal business operations at terminals or pipelines, such as gasoline or distillate fuel drained from a tank or drained from piping or hoses used to transfer gasoline or distillate fuel to tanks or trucks, or gasoline or distillate fuel discharged from a safety relief valve that are segregated for further processing.

Transmix blender means any person who owns, leases, operates, controls, or supervises a transmix blending facility.

Transmix blending facility means any facility that produces gasoline by blending transmix into PCG under § 1090.500.

Transmix distillate product (TDP) means the diesel fuel blendstock that is produced when transmix is separated into blendstocks at a transmix processing facility.

Transmix gasoline product (TGP) means the gasoline blendstock that is produced when transmix is separated into blendstocks at a transmix processing facility.

Transmix processing facility means any facility that produces TGP or TDP from transmix by distillation or other refining processes, but does not produce gasoline or diesel fuel by processing crude oil or other products.

Transmix processor means any person who owns, leases, operates, controls, or supervises a transmix processing facility. A transmix processor is a fuel manufacturer.

Ultra low-sulfur diesel (ULSD) means diesel fuel that is certified to meet the standards in § 1090.305.

United States means the 50 states, the District of Columbia, the Commonwealth of Puerto Rico, the Commonwealth of the Northern Mariana Islands, Guam, American Samoa, and the U.S. Virgin Islands.

Volume Additive Reconciliation (VAR) Period means the following:

(1) For an automated detergent blending facility, the VAR period is a time period lasting no more than 31 days or until an adjustment to a detergent concentration rate that increases the initial rate by more than 10 percent, whichever occurs first. The concentration setting for a detergent injector may be adjusted by more than 10 percent above the initial rate without terminating the VAR Period, provided the purpose of the change is to correct a batch misadditization prior to the transfer of the batch to another party, or to correct an equipment malfunction and the concentration is immediately returned to no more than 10 percent above the initial rate of concentration after the correction.

(2) For a non-automated detergent blending facility, the VAR Period constitutes the blending of one batch of gasoline.

Voluntary consensus standards body (VCSB) means an organization that follows consistent protocols to adopt standards reflecting a wide range of input from interested parties. ASTM International and the International Organization for Standardization are examples of VCSB organizations.

Wholesale purchaser-consumer (WPC) means any person that is an ultimate consumer of fuels and who purchases or obtains fuels for use in motor vehicles, nonroad vehicles, nonroad engines, or nonroad equipment, including locomotive or marine engines, and, in the case of liquid fuels, receives delivery of that product into a storage tank of at least 550-gallon capacity substantially under the control of that person.

Winter gasoline means gasoline that is not subject to the RVP standards in § 1090.215.

Winter season means any duration outside of the summer season or high ozone season.

§ 1090.85 Explanatory terms.

This section explains how certain phrases and terms are used in this part, especially those used to clarify and explain regulatory provisions. They do not, however, constitute specific regulatory requirements and as such do not impose any compliance obligation on regulated parties.

(a) *Types of provisions.* The term ''provision'' includes all aspects of the regulations in this part. As specified in this section, regulatory provisions include standards, requirements, and prohibitions, along with a variety of other types of provisions.

(1) A standard is a limit on the formulation, components, or characteristics of any fuel, fuel additive, or regulated blendstock, established by regulation under this part. Compliance with or conformance to a standard is a specific type of requirement. Thus, a statement about the requirements of a part or section also applies with respect to the standards in the part or section. Examples of standards include the sulfur per-gallon standards for gasoline and diesel fuel.

(2) While requirements state what someone must do, prohibitions state what someone must not do. Failing to meet any requirement that applies to a person under this part is a prohibited act.

(3) The regulations in this part include provisions that are not standards, requirements, or prohibitions, such as definitions.

(b) *Subject to*. A fuel is considered ''subject to'' a specific provision if that provision applies, even if it falls within an exemption authorized under a different part of this regulation. For example, gasoline is subject to the provisions of this part even if it is exempt from the standards under subpart G of this part.

(c) *Singular and plural*. Unless stated otherwise or unless it is clear from the regulatory context, provisions written in singular form include the plural form and provisions written in plural form include the singular form.

(d) *Inclusive lists*. Lists in the regulations in this part prefaced by ''including'' or ''this includes'' are not exhaustive. The terms ''including'' and ''this includes'' should be read to mean ''including but not limited to'' and ''this includes but is not limited to.''

(e) *Notes*. Statements that begin with ''Note:'' or ''Note that'' are intended to clarify specific regulatory provisions stated elsewhere in the regulations in this part. By themselves, such statements are not intended to specify regulatory requirements.

(f) *Examples*. Examples provided in the regulations in this part are typically introduced by either ''for example'' or ''such as.'' Specific examples given in the regulations do not necessarily represent the most common examples. The regulations may specify examples conditionally (that is, specifying that they are applicable only if certain criteria or conditions are met). Lists of examples are not exhaustive.

§ 1090.90 Acronyms and abbreviations.

500 ppm LM diesel fuel.	As defined in § 1090.80.
ABT	averaging, banking, and trading.
ARV	accepted reference value.
BOB	gasoline before oxygenate blending.
CARB	California Air Resources Board.
CFR	Code of Federal Regulations.
CG	conventional gasoline.
DFE	denatured fuel ethanol.
E0	As defined in § 1090.80.
E10	As defined in § 1090.80.
E15	As defined in § 1090.80.
ECA marine fuel	As defined in § 1090.80.
EPA	Environmental Protection Agency.
GTAB	gasoline treated as blendstock.
IMO marine fuel	As defined in § 1090.80.
LAC	lowest additive concentration.
LLOQ	laboratory limit of quantitation.
MARPOL Annex VI	The International Convention for the Prevention of Pollution from Ships, 1973 as modified by the Protocol of 1978 Annex VI.
NAAQS	National Ambient Air Quality Standard.
NARA	National Archives and Records Administration.
NFSP	national fuels survey program.
NGL	natural gas liquids.
NIST	National Institute for Standards and Technology.

NSTOP	national sampling and testing oversight program.
PCG	previously certified gasoline.
PLOQ	published limit of quantitation.
ppm (mg/kg)	parts per million (or milligram per kilogram).
PTD	product transfer document.
R&D	research and development.
RCO	responsible corporate officer.
RFG	reformulated gasoline.
RFS	Renewable Fuel Standard.
RVP	Reid vapor pressure.
SIP	state implementation plan.
SQC	statistical quality control.
T10, T50, T90	temperatures representing the points in a distillation process where 10, 50, and 90 percent of the sample evaporates, respectively.
TDP	transmix distillate product.
TGP	transmix gasoline product.
U.S	United States.
U.S.C	United States Code.
ULSD	ultra-low-sulfur diesel fuel.
VCSB	voluntary consensus standards body.

§ 1090.95 Incorporation by reference.

(a) Certain material is incorporated by reference into this part with the approval of the Director of the Federal Register under 5 U.S.C. 552(a) and 1 CFR part 51. All approved material is available for inspection at U.S. EPA, Air and Radiation Docket and Information Center, WJC West Building, Room 3334, 1301 Constitution Ave. NW, Washington, DC 20460, (202) 566–1742, and is also available from the sources listed in this section. This material is also available for inspection at the National Archives and Records Administration (NARA). For information on the availability of this material at NARA, email *fedreg.legal@nara.gov*, or go to *www.archives.gov/federal-register/cfr/ibr-locations.html*.

(b) American Institute of Certified Public Accountants, 220 Leigh Farm Rd., Durham, NC 27707–8110, (888) 777–7077, or *www.aicpa.org*.

(1) AICPA Code of Professional Conduct, updated through June 2020; IBR approved for § 1090.1800(b).

(2) Statements on Quality Control Standards (SQCS) No. 8, QC Section 10: A Firm's System of Quality Control, current as of July 1, 2019; IBR approved for § 1090.1800(b).

(3) Statement on Standards for Attestation Engagements No. 18, Attestation Standards: Clarification and Recodification, Issued April 2016; IBR approved for § 1090.1800(b).

(c) ASTM International, 100 Barr Harbor Dr., P.O. Box C700, West Conshohocken, PA 19428–2959, (877) 909–2786, or *www.astm.org*.

(1) ASTM D86–20a, Standard Test Method for Distillation of Petroleum Products and Liquid Fuels at Atmospheric Pressure, approved July 1, 2020 (''ASTM D86''); IBR approved for § 1090.1350(b).

(2) ASTM D287–12b (Reapproved 2019), Standard Test Method for API Gravity of Crude Petroleum and Petroleum Products (Hydrometer Method), approved December 1, 2019 (''ASTM D287''); IBR approved for § 1090.1337(d).

(3) ASTM D975–20a, Standard Specification for Diesel Fuel, approved June 1, 2020 (''ASTM D975''); IBR approved for § 1090.80.

(4) ASTM D976–06 (Reapproved 2016), Standard Test Method for Calculated Cetane Index of Distillate Fuels, approved April 1, 2016 (''ASTM D976''); IBR approved for § 1090.1350(b).

(5) ASTM D1298–12b (Reapproved 2017), Standard Test Method for Density, Relative Density, or API Gravity of Crude Petroleum and Liquid Petroleum Products by Hydrometer Method, approved July 15, 2017 (''ASTM D1298''); IBR approved for § 1090.1337(d).

(6) ASTM D1319–19, Standard Test Method for Hydrocarbon Types in Liquid Petroleum Products by Fluorescent Indicator Adsorption, approved August 1, 2019 (''ASTM D1319''); IBR approved for § 1090.1350(b).

(7) ASTM D2163–14 (Reapproved 2019), Standard Test Method for Determination of Hydrocarbons in Liquefied Petroleum (LP) Gases and Propane/Propene Mixtures by Gas Chromatography, approved May 1, 2019 (''ASTM D2163''); IBR approved for § 1090.1350(b).

(8) ASTM D2622–16, Standard Test Method for Sulfur in Petroleum Products by Wavelength Dispersive X-ray Fluorescence Spectrometry, approved January 1, 2016 (''ASTM D2622''); IBR approved for §§ 1090.1350(b), 1090.1360(d), 1090.1365(b), and 1090.1375(c).

(9) ASTM D3120–08 (Reapproved 2019), Standard Test Method for Trace Quantities of Sulfur in Light Liquid Petroleum Hydrocarbons by Oxidative Microcoulometry, approved May 1, 2019 (''ASTM D3120''); IBR approved for § 1090.1365(b).

(10) ASTM D3231–18, Standard Test Method for Phosphorus in Gasoline, approved April 1, 2018 (''ASTM D3231''); IBR approved for § 1090.1350(b).

(11) ASTM D3237–17, Standard Test Method for Lead in Gasoline by Atomic Absorption Spectroscopy, approved June 1, 2017 (''ASTM D3237''); IBR approved for § 1090.1350(b).

(12) ASTM D3606–20e1, Standard Test Method for Determination of Benzene and Toluene in Spark Ignition Fuels by Gas Chromatography, approved July 1, 2020 (''ASTM D3606''); IBR approved for § 1090.1360(c).

(13) ASTM D4052–18a, Standard Test Method for Density, Relative Density, and API Gravity of Liquids by Digital Density Meter, approved December 15, 2018 (''ASTM D4052''); IBR approved for § 1090.1337(d).

(14) ASTM D4057–19, Standard Practice for Manual Sampling of Petroleum and Petroleum Products, approved July 1, 2019 (''ASTM D4057''); IBR approved for §§ 1090.1335(b) and 1090.1605(b).

(15) ASTM D4177–16e1, Standard Practice for Automatic Sampling of Petroleum and Petroleum Products, approved October 1, 2016 (''ASTM D4177''); IBR approved for §§ 1090.1315(a) and 1090.1335(c).

(16) ASTM D4737–10 (Reapproved 2016), Standard Test Method for Calculated Cetane Index by Four Variable Equation, approved July 1, 2016 (''ASTM D4737''); IBR approved for § 1090.1350(b).

(17) ASTM D4806–20, Standard Specification for Denatured Fuel Ethanol for Blending with Gasolines for Use as Automotive Spark-Ignition Engine Fuel, approved May 1, 2020 (''ASTM D4806''); IBR approved for § 1090.1395(a).

(18) ASTM D4814–20a, Standard Specification for Automotive Spark-Ignition Engine Fuel, approved April 1, 2020 (''ASTM D4814''); IBR approved for §§ 1090.80 and 1090.1395(a).

(19) ASTM D5134–13 (Reapproved 2017), Standard Test Method for Detailed Analysis of Petroleum Naphthas through n-Nonane by Capillary Gas Chromatography, approved October 1, 2017 (''ASTM D5134''); IBR approved for § 1090.1350(b).

(20) ASTM D5186–20, Standard Test Method for Determination of the Aromatic Content and Polynuclear Aromatic Content of Diesel Fuels By Supercritical Fluid Chromatography, approved July 1, 2020 (''ASTM D5186''); IBR approved for § 1090.1350(b).

(21) ASTM D5191–20, Standard Test Method for Vapor Pressure of Petroleum Products and Liquid Fuels (Mini Method), approved May 1, 2020 (''ASTM D5191''); IBR approved for §§ 1090.1360(d) and 1090.1365(b).

(22) ASTM D5453–19a, Standard Test Method for Determination of Total Sulfur in Light Hydrocarbons, Spark Ignition Engine Fuel, Diesel Engine Fuel, and Engine Oil by Ultraviolet Fluorescence, approved July 1, 2019 (''ASTM D5453''); IBR approved for § 1090.1350(b).

(23) ASTM D5500–20a, Standard Test Method for Vehicle Evaluation of Unleaded Automotive Spark-Ignition Engine Fuel for Intake Deposit Formation, approved June 1, 2020 (''ASTM D5500''); IBR approved for § 1090.1395(c).

(24) ASTM D5599–18, Standard Test Method for Determination of Oxygenates in Gasoline by Gas Chromatography and Oxygen Selective Flame Ionization Detection, approved

June 1, 2018 (''ASTM D5599''); IBR approved for §§ 1090.1360(d) and 1090.1365(b).

(25) ASTM D5769–20, Standard Test Method for Determination of Benzene, Toluene, and Total Aromatics in Finished Gasolines by Gas Chromatography/Mass Spectrometry, approved June 1, 2020 (''ASTM D5769''); IBR approved for §§ 1090.1350(b), 1090.1360(d), and 1090.1365(b).

(26) ASTM D5842–19, Standard Practice for Sampling and Handling of Fuels for Volatility Measurement, approved November 1, 2019 (''ASTM D5842''); IBR approved for § 1090.1335(d).

(27) ASTM D5854–19a, Standard Practice for Mixing and Handling of Liquid Samples of Petroleum and Petroleum Products, approved May 1, 2019 (''ASTM D5854''); IBR approved for § 1090.1315(a).

(28) ASTM D6201–19a, Standard Test Method for Dynamometer Evaluation of Unleaded Spark-Ignition Engine Fuel for Intake Valve Deposit Formation, approved December 1, 2019 (''ASTM D6201''); IBR approved for § 1090.1395(a).

(29) ASTM D6259–15 (Reapproved 2019), Standard Practice for Determination of a Pooled Limit of Quantitation for a Test Method, approved May 1, 2019 (''ASTM D6259''); IBR approved for § 1090.1355(b).

(30) ASTM D6299–20, Standard Practice for Applying Statistical Quality Assurance and Control Charting Techniques to Evaluate Analytical Measurement System Performance, approved May 1, 2020 (''ASTM D6299''); IBR approved for §§ 1090.1370(c), 1090.1375(a), (b), and (c), and 1090.1450(c).

(31) ASTM D6550–20, Standard Test Method for Determination of Olefin Content of Gasolines by Supercritical-Fluid Chromatography, approved July 1, 2020 (''ASTM D6550''); IBR approved for § 1090.1350(b).

(32) ASTM D6667–14 (Reapproved 2019), Standard Test Method for Determination of Total Volatile Sulfur in Gaseous Hydrocarbons and Liquefied Petroleum Gases by Ultraviolet Fluorescence, approved May 1, 2019 (''ASTM D6667''); IBR approved for §§ 1090.1360(d), 1090.1365(b), and 1090.1375(c).

(33) ASTM D6708–19a, Standard Practice for Statistical Assessment and Improvement of Expected Agreement Between Two Test Methods that Purport to Measure the Same Property of a Material, approved November 1, 2019 (''ASTM D6708''); IBR approved for §§ 1090.1360(c), 1090.1365(d) and (f), and 1090.1375(c).

(34) ASTM D6729–14, Standard Test Method for Determination of Individual Components in Spark Ignition Engine Fuels by 100 Metre Capillary High Resolution Gas Chromatography, approved October 1, 2014 (''ASTM D6729''); IBR approved for § 1090.1350(b).

(35) ASTM D6730–19, Standard Test Method for Determination of Individual Components in Spark Ignition Engine Fuels by 100-Metre Capillary (with Precolumn) High-Resolution Gas Chromatography, approved July 1, 2019 (''ASTM D6730''); IBR approved for § 1090.1350(b).

(36) ASTM D6751–20, Standard Specification for Biodiesel Fuel Blend Stock (B100) for Middle Distillate Fuels, approved January 1, 2020 (''ASTM D6751''); IBR approved for § 1090.1350(b).

(37) ASTM D6792–17, Standard Practice for Quality Management Systems in Petroleum Products, Liquid Fuels, and Lubricants Testing Laboratories, approved May 1, 2017 (''ASTM D6792''); IBR approved for § 1090.1450(c).

(38) ASTM D7039–15a (Reapproved 2020), Standard Test Method for Sulfur in Gasoline, Diesel Fuel, Jet Fuel, Kerosine, Biodiesel, Biodiesel Blends, and Gasoline-Ethanol Blends by Monochromatic Wavelength Dispersive X-ray Fluorescence Spectrometry, approved May 1, 2020 (''ASTM D7039''); IBR approved for § 1090.1365(b).

(39) ASTM D7717–11 (Reapproved 2017), Standard Practice for Preparing Volumetric Blends of Denatured Fuel Ethanol and Gasoline Blendstocks for Laboratory Analysis, approved May 1, 2017 (''ASTM D7717''); IBR approved for § 1090.1340(b).

(40) ASTM D7777–13 (Reapproved 2018)e1, Standard Test Method for Density, Relative Density, or API Gravity of Liquid Petroleum by Portable Digital Density Meter, approved October 1, 2018 (''ASTM D7777''); IBR approved for § 1090.1337(d).

(d) Environmental Protection Agency, Air and Radiation Docket and Information Center, WJC West Building,

Room 3334, 1301 Constitution Ave. NW, Washington, DC 20460, (202) 566–1742.

(1) CARB Test Method, 13 CA ADC § 2257; California Code of Regulations Title 13. Motor Vehicles, Division 3. Air Resources Board, Chapter 5. Standards for Motor Vehicle Fuels, Article 1. Standards for Gasoline, Subarticle 1. Gasoline Standards that Became Applicable Before 1996, § 2257. Required Additives in Gasoline; amendment filed May 17, 1999.

(2) [Reserved]

(e) The Institute of Internal Auditors, 1035 Greenwood Blvd., Suite 401, Lake Mary, FL 32746, (407) 937–1111, or *www.theiia.org*.

(1) International Standards for the Professional Practice of Internal Auditing (Standards), Revised October 2016; IBR approved for § 1090.1800(b).

(2) [Reserved]

(f) National Institute of Standards and Technology, 100 Bureau Dr., Stop 1070, Gaithersburg, MD 20899–1070, (301) 975–6478, or *www.nist.gov*.

(1) NIST Handbook 158, Field Sampling Procedures for Fuel and Motor Oil Quality Testing—A Handbook for Use by Fuel and Oil Quality Regulatory Officials, 2016 Edition, April 2016; IBR approved for § 1090.1410(b).

(2) [Reserved]

Subpart B—General Requirements and Provisions for Regulated Parties

§ 1090.100 General provisions.

This subpart provides an overview of the general requirements and provisions applicable to any regulated party under this part. A person who meets the definition of more than one type of regulated party must comply with the requirements applicable to each of those types of regulated parties. For example, a fuel manufacturer that also transports fuel must meet the requirements applicable to a fuel manufacturer and a distributor. A regulated party is required to comply with all applicable requirements of this part, regardless of whether they are identified in this subpart. Any person that produces, sells, transfers, supplies, dispenses, or distributes fuel, fuel additive, or regulated blendstock must comply with all applicable requirements.

(a) *Recordkeeping*. Any party that engages in activities that are regulated under this part must comply with recordkeeping requirements under subpart M of this part.

(b) *Compliance and enforcement*. Any party that engages in activities that are regulated under this part is subject to compliance and enforcement provisions under subpart R of this part.

(c) *Hardships and exemptions*. Some regulated parties under this part may be eligible, or eligible to petition, for a hardship or exemption under subpart G of this part.

(d) In addition to the requirements of paragraphs (a) through (c) of this section and § 1090.105, an importer must also comply with subpart Q of this part.

§ 1090.105 Fuel manufacturers.

This section provides an overview of general requirements applicable to a fuel manufacturer. A gasoline manufacturer must comply with the requirements of paragraph (a) of this section. A diesel fuel or IMO marine fuel manufacturer must comply with the requirements of paragraph (b) of this section.

(a) *Gasoline manufacturers*. Except as specified otherwise in this subpart, a gasoline manufacturer must comply with the following requirements:

(1) *Producing compliant gasoline*. A gasoline manufacturer must produce or import gasoline that meets the standards of subpart C of this part and must comply with the ABT requirements in subpart H of this part.

(2) *Registration*. A gasoline manufacturer must register with EPA under subpart I of this part.

(3) *Reporting*. A gasoline manufacturer must submit reports to EPA under subpart J of this part.

(4) *Certification and designation*. A gasoline manufacturer must certify and designate the gasoline they produce under subpart K of this part.

(5) *PTDs*. On each occasion when a gasoline manufacturer transfers custody of or title to any gasoline, the transferor must provide to the transferee PTDs under subpart L of this part.

(6) *Sampling, testing, and sample retention.* A gasoline manufacturer must conduct sampling, testing, and sample retention in accordance with subpart N of this part.

(7) *Surveys.* A gasoline manufacturer may participate in applicable fuel surveys under subpart O of this part.

(8) *Annual attest engagement.* A gasoline manufacturer must submit annual attest engagement reports to EPA under subpart S of this part.

(b) *Diesel fuel and IMO marine fuel manufacturers.* A diesel fuel or IMO marine fuel manufacturer must comply with the following requirements, as applicable:

(1) *Producing compliant diesel fuel and ECA marine fuel.* A diesel fuel or ECA marine fuel manufacturer must produce or import diesel fuel or ECA marine fuel that meets the requirements of subpart D of this part.

(2) *Registration.* A diesel fuel or ECA marine fuel manufacturer must register with EPA under subpart I of this part.

(3) *Reporting.* A diesel fuel manufacturer must submit reports to EPA under subpart J of this part.

(4) *Certification and designation.* A diesel fuel or ECA marine fuel manufacturer must certify and designate the diesel fuel or ECA marine fuel they produce under subpart K of this part. A distillate global marine fuel manufacturer must designate the distillate global marine fuel they produce under subpart K of this part.

(5) *PTDs.* On each occasion when a diesel fuel or IMO marine fuel manufacturer transfers custody or title to any diesel fuel or IMO marine fuel, the transferor must provide to the transferee PTDs under subpart L of this part.

(6) *Sampling, testing, and retention requirements.* A diesel fuel or ECA marine fuel manufacturer must conduct sampling, testing, and sample retention in accordance with subpart N of this part.

(7) *Surveys.* A diesel fuel manufacturer may participate in applicable fuel surveys under subpart O of this part.

(8) *Distillate global marine fuel manufacturers.* A distillate global marine fuel manufacturer does not need to comply with the requirements of paragraphs (b)(1) through (3), and (6) of this section for global marine fuel that is exempt from the standards in subpart D of this part, as specified in § 1090.650.

§ 1090.110 Detergent blenders.

A detergent blender must comply with the requirements of this section.

(a) *Gasoline standards.* A detergent blender must comply with the applicable requirements of subpart C of this part.

(b) *PTDs.* On each occasion when a detergent blender transfers custody of or title to any fuel, fuel additive, or regulated blendstock, the transferor must provide to the transferee PTDs under subpart L of this part.

(c) *Recordkeeping.* A detergent blender must demonstrate compliance with the requirements in § 1090.260(a) as specified in § 1090.1240.

(d) *Equipment calibration.* A detergent blender at an automated detergent blending facility must calibrate their detergent blending equipment in accordance with subpart N of this part.

§ 1090.115 Oxygenate blenders.

An oxygenate blender must comply with the requirements of this section.

(a) *Gasoline standards.* An oxygenate blender must comply with the applicable requirements of subpart C of this part.

(b) *Registration.* An oxygenate blender must register with EPA under subpart I of this part.

(c) *PTDs.* On each occasion when an oxygenate blender transfers custody or title to any fuel, fuel additive, or regulated blendstock, the transferor must provide to the transferee PTDs under subpart L of this part.

(d) *Oxygenate blending requirements.* An oxygenate blender must follow the blending instructions specified by the gasoline manufacturer under § 1090.710(a)(5) unless the oxygenate blender recertifies BOBs under § 1090.740.

§ 1090.120 Oxygenate producers.

This section provides an overview of general requirements applicable to an oxygenate producer (*e.g.*, a DFE or isobutanol producer). A DFE producer must comply with the requirements for an oxygenate producer in paragraph (a)

of this section and the additional requirements specified in paragraph (b) of this section.

(a) *Oxygenate producers.* An oxygenate producer must comply with the following requirements:

(1) *Gasoline standards.* An oxygenate producer must comply with the applicable requirements of subpart C of this part.

(2) *Registration.* An oxygenate producer must register with EPA under subpart I of this part.

(3) *Reporting.* An oxygenate producer must submit reports to EPA under subpart J of this part.

(4) *Certification and designation.* An oxygenate producer must certify and designate the oxygenate they produce under subpart K of this part.

(5) *PTDs.* On each occasion when an oxygenate producer transfers custody or title to any fuel, fuel additive, or regulated blendstock, the transferor must provide to the transferee PTDs under subpart L of this part.

(6) *Sampling, testing, and retention requirements.* An oxygenate producer must conduct sampling, testing, and sample retention in accordance with subpart N of this part.

(b) *DFE producers.* In addition to the requirements specified in paragraph (a) of this section, a DFE producer must meet all the following requirements:

(1) Use denaturant that complies with the requirements specified in §§ 1090.270(b) and 1090.275.

(2) Participate in a survey program conducted by an independent surveyor under subpart O of this part if the DFE producer produces DFE made available for use in the production of E15.

§ 1090.125 Certified butane producers.

A certified butane producer must comply with the requirements of this section.

(a) *Gasoline standards.* A certified butane producer must comply with the applicable requirements of subpart C of this part.

(b) *Certification and designation.* A certified butane producer must certify and designate the certified butane they produce under subpart K of this part.

(c) *PTDs.* On each occasion when a certified butane producer transfers custody of or title to any certified butane, the transferor must provide to the transferee PTDs under subpart L of this part.

(d) *Sampling, testing, and retention requirements.* A certified butane producer must conduct sampling, testing, and sample retention in accordance with subpart N of this part.

§ 1090.130 Certified butane blenders.

A certified butane blender that blends certified butane into PCG is a gasoline manufacturer that may comply with the requirements of this section in lieu of the requirements in § 1090.105.

(a) *Gasoline standards.* A certified butane blender must comply with the applicable requirements of subpart C of this part.

(b) *Registration.* A certified butane blender must register with EPA under subpart I of this part.

(c) *Reporting.* A certified butane blender must submit reports to EPA under subpart J of this part.

(d) *PTDs.* When certified butane is blended with PCG, PTDs that accompany the gasoline blended with certified butane must comply with subpart L of this part.

(e) *Sampling and testing requirements.* A certified butane blender must comply with the alternative sampling and testing approach in § 1090.1320(b).

(f) *Survey.* A certified butane blender may participate in the applicable fuel surveys of subpart O of this part.

(g) *Annual attest engagement.* A certified butane blender must submit annual attest engagement reports to EPA under subpart S of this part.

§ 1090.135 Certified pentane producers.

A certified pentane producer must comply with the requirements of this section.

(a) *Gasoline standards.* A certified pentane producer must comply with the applicable requirements of subpart C of this part.

(b) *Registration.* A certified pentane producer must register with EPA under subpart I of this part.

(c) *Reporting.* A certified pentane producer must submit reports to EPA under subpart J of this part.

(d) *Certification and designation.* A certified pentane producer must certify and designate the certified pentane they produce under subpart K of this part.

(e) *PTDs.* On each occasion when a certified pentane producer transfers custody of or title to any certified pentane, the transferor must provide to the transferee PTDs under subpart L of this part.

(f) *Sampling, testing, and retention requirements.* A certified pentane producer must conduct sampling, testing, and sample retention in accordance with subpart N of this part.

§ 1090.140 Certified pentane blenders.

A certified pentane blender that blends certified pentane into PCG is a gasoline manufacturer that may comply with the requirements of this section in lieu of the requirements in § 1090.105.

(a) *Gasoline standards.* A certified pentane blender must comply with the applicable requirements of subpart C of this part.

(b) *Registration.* A certified pentane blender must register with EPA under subpart I of this part.

(c) *Reporting.* A certified pentane blender must submit reports to EPA under subpart J of this part.

(d) *PTDs.* When certified pentane is blended with PCG, PTDs that accompany the gasoline blended with pentane must comply with subpart L of this part.

(e) *Sampling, testing, and retention requirements.* A certified pentane blender must comply with the alternative sampling and testing approach in § 1090.1320(b).

(f) *Survey.* A certified pentane blender may participate in the applicable fuel surveys of subpart O of this part.

(g) *Annual attest engagement.* A certified pentane blender must submit annual attest engagement reports to EPA under subpart S of this part.

§ 1090.145 Transmix processors.

A transmix processor must comply with the requirements of this section.

(a) *Transmix requirements.* A transmix processor must comply with the transmix requirements of subpart F of this part.

(b) *Registration.* A transmix processor must register with EPA under subpart I of this part.

(c) *Certification and designation.* A transmix processor must certify and designate the fuel they produce under subpart K of this part.

(d) *PTDs.* On each occasion when a transmix processor produces a batch of fuel or transfers custody of or title to any fuel, fuel additive, or regulated blendstock, the transferor must provide to the transferee PTDs under subpart L of this part.

(e) *Sampling, testing, and retention requirements.* A transmix processor must conduct sampling, testing, and sample retention in accordance with subparts F and N of this part.

(f) *Reporting.* A transmix processor must submit reports to EPA under subpart J of this part.

(g) *Annual attest engagement.* A transmix processor must submit annual attest engagement reports to EPA under subpart S of this part.

§ 1090.150 Transmix blenders.

A transmix blender must comply with the requirements of this section.

(a) *Transmix requirements.* A transmix blender must comply with the transmix requirements of subpart F of this part.

(b) *PTDs.* On each occasion when a transmix blender produces a batch of fuel or transfers custody or title to any fuel, fuel additive, or regulated blendstock, the transferor must provide to the transferee PTDs under subpart L of this part.

(c) *Sampling, testing, and retention requirements.* A transmix blender must conduct sampling, testing, and sample retention in accordance with subparts F and N of this part.

§ 1090.155 Fuel additive manufacturers.

This section provides an overview of general requirements applicable to a fuel additive manufacturer. A gasoline additive manufacturer must comply with the requirements of paragraph (a) of this section. A diesel fuel additive manufacturer must comply with the requirements of paragraph (b) of this section. A certified ethanol denaturant

producer must comply with the requirements of paragraph (c) of this section.

(a) *Gasoline additive manufacturers.* A gasoline additive manufacturer must meet the following requirements:

(1) *Gasoline additive standards.* A gasoline additive manufacturer must produce gasoline additives that comply with subpart C of this part.

(2) *Certification.* A gasoline additive manufacturer must certify the gasoline additives they produce under subpart K of this part.

(3) *PTDs.* On each occasion when a gasoline additive manufacturer transfers custody of or title to any gasoline additive, the transferor must provide to the transferee PTDs under subpart L of this part.

(4) *Gasoline detergent manufacturers.* A gasoline detergent manufacturer must comply with the following requirements:

(i) *Part 79 registration and LAC determination.* A gasoline detergent manufacturer must register gasoline detergent(s) under 40 CFR 79.21 at a concentration that is greater than or equal to the LAC reported by the gasoline detergent manufacturer under 40 CFR 79.21(j). Note: EPA provides a list on EPA's website of detergents that have been certified by the gasoline detergent manufacturer as meeting the deposit control requirement (Search for ''List of Certified Detergent Additives'').

(ii) *Gasoline detergent standards.* Report the LAC determined under §1090.260(b) and provide specific composition information as part of the gasoline detergent manufacturer's registration of the detergent under 40 CFR 79.21(j).

(iii) *PTDs.* On each occasion when a gasoline detergent manufacturer transfers custody of or title to any gasoline detergent, the transferor must provide to the transferee PTDs under subpart L of this part.

(iv) *Sampling, testing, and retention requirements.* A gasoline detergent manufacturer that registers detergents must conduct sampling, testing, and sample retention in accordance with subpart N of this part.

(b) *Diesel fuel additive manufacturers.* A diesel fuel additive manufacturer must meet the following requirements:

(1) *Diesel fuel additive standards.* A diesel fuel additive manufacturer must produce diesel fuel additives that comply with subpart D of this part.

(2) *Certification.* A diesel fuel additive manufacturer must certify the diesel fuel additives they produce under subpart K of this part.

(3) *PTDs.* On each occasion when a diesel fuel additive manufacturer transfers custody of or title to any diesel additive, the transferor must provide to the transferee PTDs under subpart L of this part.

(c) *Certified ethanol denaturant producers and importers.* A certified ethanol denaturant producer or importer must meet the following requirements:

(1) *Certification.* A certified ethanol denaturant producer or importer must certify that certified ethanol denaturant meets the requirements in §1090.275 using the procedures specified at §1090.1000(g).

(2) *Registration.* A certified ethanol denaturant producer or importer must register with EPA under subpart I of this part.

(3) *PTDs.* On each occasion when a certified ethanol denaturant producer transfers custody or title to any fuel, fuel additive, or regulated blendstock, the transferor must provide to the transferee PTDs under subpart L of this part.

§1090.160 Distributors, carriers, and resellers.

A distributor, carrier, or reseller must comply with the requirements of this section.

(a) *Gasoline and diesel standards.* A distributor, carrier, or reseller must comply with the applicable requirements of subparts C and D of this part.

(b) *Registration.* A distributor or carrier must register with EPA under subpart I of this part if they are part of the 500 ppm LM diesel fuel distribution chain under a compliance plan submitted under §1090.515(g).

(c) *PTDs.* On each occasion when a distributor, carrier, or reseller transfers custody or title to any fuel, fuel additive, or regulated blendstock, the

transferor must provide to the transferee PTDs under subpart L of this part.

§ 1090.165 Retailers and WPCs.

A retailer or WPC must comply with the requirements of this section.

(a) *Gasoline and diesel standards.* A retailer or WPC must comply with the applicable requirements of subparts C and D of this part.

(b) *Labeling.* A retailer or WPC that dispenses fuels requiring a label under this part must display fuel labels under subpart P of this part.

(c) *Fuels made through fuel dispensers.* A retailer or WPC that produces gasoline (*e.g.*, E15) through a fuel dispenser with anything other than PCG and DFE is also a blending manufacturer and must comply with the applicable requirements in § 1090.105.

§ 1090.170 Independent surveyors.

An independent surveyor that conducts fuel surveys must comply with the requirements of this section.

(a) *Survey provisions.* An independent surveyor must conduct fuel surveys under subpart O of this part.

(b) *Registration.* An independent surveyor must register with EPA under subpart I of this part.

(c) *Reporting.* An independent surveyor must submit reports to EPA under subpart J of this part.

(d) *Sampling, testing, and retention requirements.* An independent surveyor must conduct sampling, testing, and sample retention in accordance with subpart N of this part.

(e) *Independence requirements.* In order to perform a survey program under subpart O of this part, an independent surveyor must meet the independence requirements in § 1090.55.

§ 1090.175 Auditors.

An auditor that conducts an audit for a responsible party under this part must comply with the requirements of this section.

(a) *Registration.* An auditor must register with EPA under subpart I of this part.

(b) *Reporting.* An auditor must submit reports to EPA under subpart J of this part.

(c) *Attest engagement.* An auditor must conduct audits under subpart S of this part.

(d) *Independence requirements.* In order to perform an annual attest engagement under subpart S of this part, an auditor must meet the independence requirements in § 1090.55 unless they are a certified internal auditor under § 1090.1800(b)(1)(i).

§ 1090.180 Pipeline operators.

A pipeline operator must comply with the requirements of this section.

(a) *Gasoline and diesel standards.* A pipeline operator must comply with the applicable requirements of subparts C and D of this part.

(b) *PTDs.* On each occasion when a pipeline operator transfers custody or title to any fuel, fuel additive, or regulated blendstock, the transferor must provide to the transferee PTDs under subpart L of this part.

(c) *Transmix requirements.* A pipeline operator must comply with all applicable requirements in subpart F of this part.

Subpart C—Gasoline Standards

§ 1090.200 Overview and general requirements.

(a) Except as specified in subpart G of this part, gasoline, gasoline additives, and gasoline regulated blendstocks are subject to the standards in this subpart.

(b) Except for the sulfur average standard in § 1090.205(a) and the benzene average standards in § 1090.210(a) and (b), the standards in this part apply to gasoline, gasoline additives, and gasoline regulated blendstocks on a per-gallon basis. A gasoline manufacturer, gasoline additive manufacturer (*e.g.*, an oxygenate or certified ethanol denaturant producer), or gasoline regulated blendstock producer (*e.g.*, a certified butane or certified pentane producer) must demonstrate compliance with the per-gallon standards in this subpart by measuring fuel parameters in accordance with subpart N of this part.

(c)(1) Except as specified in paragraph (c)(2) of this section, the sulfur average standard in § 1090.205(a) and the benzene average standards in § 1090.210(a) and (b) apply to all gasoline

produced or imported by a fuel manufacturer during a compliance period. A fuel manufacturer must demonstrate compliance with average standards by measuring fuel parameters in accordance with subpart N of this part and by determining compliance under subpart H of this part.

(2) The sulfur average standard in §1090.205(a) and the benzene average standards in §1090.210(a) and (b) do not apply to gasoline produced by the following:

(i) Truck and rail importers using the provisions of §1090.1610 to meet the alternative per-gallon standards of §§1090.205(d) and 1090.210(c).

(ii) Certified butane blenders.

(iii) Certified pentane blenders.

(iv) Transmix blenders.

(v) Transmix processors that produce gasoline from only TGP or both TGP and PCG.

(d) No person may produce, import, sell, offer for sale, distribute, offer to distribute, supply, offer for supply, dispense, store, transport, or introduce into commerce any gasoline, gasoline additive, or gasoline regulated blendstock that does not comply with any per-gallon standard set forth in this subpart.

(e) No person may sell, offer for sale, supply, offer for supply, dispense, transport, or introduce into commerce for use as fuel in any motor vehicle (as defined in Section 216(2) of the Clean Air Act, 42 U.S.C. 7550(2)) any gasoline that is produced with the use of additives containing lead, that contains more than 0.05 gram of lead per gallon, or that contains more than 0.005 grams of phosphorous per gallon.

(f) No fuel or fuel additive manufacturer may introduce into commerce gasoline or gasoline additives (including oxygenates) that are not ''substantially similar'' under 42 U.S.C. 7545(f)(1) or permitted under a waiver granted under 42 U.S.C. 7545(f)(4).

§1090.205 Sulfur standards.

Except as specified in subpart G of this part, all gasoline is subject to the following sulfur standards:

(a) *Sulfur average standard.* A gasoline manufacturer must meet a sulfur average standard of 10.00 ppm for each compliance period.

(b) *Fuel manufacturing facility gate sulfur per-gallon standard.* Gasoline at any fuel manufacturing facility gate is subject to a maximum sulfur per-gallon standard of 80 ppm. A gasoline manufacturer must not account for the downstream addition of oxygenates in determining compliance with this standard.

(c) *Downstream location sulfur per-gallon standard.* Gasoline at any downstream location is subject to a maximum sulfur per-gallon standard of 95 ppm.

(d) *Sulfur standard for importers that import gasoline by rail or truck.* (1) An importer that imports gasoline by rail or truck under §1090.1610 must comply with a maximum sulfur per-gallon standard of 10 ppm instead of the standards in paragraphs (a) through (c) of this section.

(2) An importer that imports gasoline by rail or truck but does not comply with the alternative sampling and testing requirements in §1090.1610 must conduct sampling, testing, and sample retention in accordance with subpart N of this part and comply with the sulfur standards in paragraphs (a) and (b) of this section.

§1090.210 Benzene standards.

Except as specified in subpart G of this part, all gasoline is subject to the following benzene standards:

(a) *Benzene average standard.* A gasoline manufacturer must meet a benzene average standard of 0.62 volume percent for each compliance period.

(b) *Maximum benzene average standard.* A gasoline manufacturer must meet a maximum benzene average standard of 1.30 volume percent without the use of credits for each compliance period.

(c) *Benzene standard for importers that import gasoline by rail or truck.* (1) An importer that imports gasoline by rail or truck under §1090.1610 must comply with a 0.62 volume percent benzene per-gallon standard instead of the standards in paragraphs (a) and (b) of this section.

(2) An importer that imports gasoline by rail or truck that does not comply with the alternative sampling and testing requirements in §1090.1610 must conduct sampling, testing, and sample

retention in accordance with subpart N of this part and comply with the benzene standards in paragraphs (a) and (b) of this section.

§ 1090.215 Gasoline RVP standards.

Except as specified in subpart G of this part and paragraph (c) of this section, all gasoline designated as summer gasoline or located at any location in the United States during the summer season is subject to a maximum RVP per-gallon standard in this section.

(a)(1) *Federal 9.0 psi maximum RVP per-gallon standard*. Gasoline designated as summer gasoline or located at any location in the United States during the summer season must meet a maximum RVP per-gallon standard of 9.0 psi unless the gasoline is subject to one of the lower maximum RVP per-gallon standards specified in paragraphs (a)(2) through (5) of this section.

(2) *Federal 7.8 maximum RVP per-gallon standard*. Gasoline designated as 7.8 psi summer gasoline, or located in the following areas during the summer season, must meet a maximum RVP per-gallon standard of 7.8 psi:

TABLE 1 TO PARAGRAPH (a)(2)—FEDERAL 7.8 PSI RVP AREAS

Area designation	State	Counties
Denver-Boulder-Greeley-Ft. Collins-Loveland.	Colorado	Adams Arapahoe, Boulder, Broomfield, Denver, Douglas, Jefferson, Larimer,[1] Weld.[2]
Reno	Nevada	Washoe.
Portland	Oregon	Clackamas (only the Air Quality Maintenance Area), Multnomah (only the Air Quality Maintenance Area), Washington (only the Air Quality Maintenance Area).
Salem	Oregon	Marion (only the Salem Area Transportation Study), Polk (only the Salem Area Transportation Study).
Beaumont-Port Arthur	Texas	Hardin, Jefferson, Orange.
Salt Lake City	Utah	Davis, Salt Lake.

[1] That portion of Larimer County, CO that lies south of a line described as follows: Beginning at a point on Larimer County's eastern boundary and Weld County's western boundary intersected by 40 degrees, 42 minutes, and 47.1 seconds north latitude, proceed west to a point defined by the intersection of 40 degrees, 42 minutes, 47.1 seconds north latitude and 105 degrees, 29 minutes, and 40.0 seconds west longitude, thence proceed south on 105 degrees, 29 minutes, 40.0 seconds west longitude to the intersection with 40 degrees, 33 minutes and 17.4 seconds north latitude, thence proceed west on 40 degrees, 33 minutes, 17.4 seconds north latitude until this line intersects Larimer County's western boundary and Grand County's eastern boundary. (Includes part of Rocky Mtn. Nat. Park.)

[2] That portion of Weld County, CO that lies south of a line described as follows: Beginning at a point on Weld County's eastern boundary and Logan County's western boundary intersected by 40 degrees, 42 minutes, 47.1 seconds north latitude, proceed west on 40 degrees, 42 minutes, 47.1 seconds north latitude until this line intersects Weld County's western boundary and Larimer County's eastern boundary.

(3) *RFG maximum RVP per-gallon standard*. Gasoline designated as Summer RFG or located in an RFG covered area during the summer season must meet a maximum RVP per-gallon standard of 7.4 psi.

(4) *California gasoline*. Gasoline designated as California gasoline or used in areas subject to the California reformulated gasoline regulations must comply with those regulations under Title 13, California Code of Regulations, sections 2250–2273.5.

(5) *SIP-controlled gasoline*. Gasoline designated as SIP-controlled gasoline or used in areas subject to a SIP-approved state fuel rule that requires an RVP of less than 9.0 psi must meet the requirements of the federally approved SIP.

(b) *Ethanol 1.0 psi waiver*. (1) Except as specified in paragraph (b)(3) of this section, any gasoline subject to a federal 9.0 psi or 7.8 psi maximum RVP per-gallon standard in paragraph (a)(1) or (2) of this section that meets the requirements of paragraph (b)(2) of this section is not in violation of this section if its RVP does not exceed the applicable standard by more than 1.0 psi.

(2) To qualify for the special regulatory treatment specified in paragraph (b)(1) of this section, gasoline must meet the applicable RVP per-gallon standard in paragraph (a)(1) or (2) of this section prior to the addition of ethanol and must contain ethanol at a concentration of at least 9 volume percent and no more than 15 volume percent.

(3) RFG and SIP-controlled gasoline that does not allow for the ethanol 1.0

psi waiver does not qualify for the special regulatory treatment specified in paragraph (b)(1) of this section.

(c) *Exceptions*. The RVP per-gallon standard in paragraph (a) of this section for the area in which the gasoline is located does not apply to that gasoline if the person(s) who produced, imported, sold, offered for sale, distributed, offered to distribute, supplied, offered for supply, dispensed, stored, transported, or introduced the gasoline into commerce can demonstrate one of the following:

(1) The gasoline is designated as winter gasoline and was not sold, offered for sale, supplied, offered for supply, dispensed, or introduced into commerce for use during the summer season and was not delivered to any retail station or WPC during the summer season.

(2) The gasoline is designated as summer gasoline for use in an area other than the area in which it is located and was not sold, offered for sale, supplied, offered for supply, dispensed, or introduced into commerce in the area in which the gasoline is located. In this case, the standard that applies to the gasoline is the standard applicable to the area for which the gasoline is designated.

§ 1090.220 RFG standards.

The standards in this section apply to gasoline that is designated as RFG or RBOB or that is used in an RFG covered area. Gasoline that meets the requirements of this section is deemed to be in compliance with the requirements of 42 U.S.C. 7545(k).

(a) *Sulfur standards*. RFG or RBOB must comply with the sulfur average standard in § 1090.205(a) and the sulfur per-gallon standards in § 1090.205(b) and (c).

(b) *Benzene standards*. RFG or RBOB must comply with the benzene average standards in § 1090.210(a) and (b).

(c) *RVP standard*. Summer RFG or Summer RBOB must comply with the RFG RVP standard in § 1090.215(a)(3).

(d) *Heavy metals standard*. RFG or RBOB must not contain any heavy metals, including but not limited to lead or manganese. EPA may waive this prohibition for a heavy metal (other than lead) if EPA determines that addition of the heavy metal to the gasoline will not increase, on an aggregate mass or cancer-risk basis, toxic air pollutant emissions from motor vehicles.

(e) *Certified butane and certified pentane blending limitation*. Certified butane and certified pentane must not be blended with Summer RFG or Summer RBOB under § 1090.1320.

§ 1090.225 Anti-dumping standards.

Gasoline that meets all applicable standards in this subpart is deemed to be in compliance with the anti-dumping requirements of 42 U.S.C. 7545(k)(8).

§ 1090.230 Limitation on use of gasoline-ethanol blends.

(a) No person may sell, introduce, cause or permit the sale or introduction of gasoline containing greater than 10 volume percent ethanol (*e.g.*, E15) into any model year 2000 or older light-duty gasoline motor vehicle, any heavy-duty gasoline motor vehicle or engine, any highway or off-highway motorcycle, or any gasoline-powered nonroad engine, vehicle, or equipment.

(b) Paragraph (a) of this section does not prohibit a person from producing, selling, introducing, or causing or allowing the sale or introduction of gasoline containing greater than 10 volume percent ethanol into any flex-fuel vehicle or flex-fuel engine.

§ 1090.250 Certified butane standards.

Butane designated as certified butane under § 1090.1000(e) for use under the butane blending provisions of § 1090.1320(b) must meet the following per-gallon standards:

(a) *Butane content*. Minimum 85 volume percent.

(b) *Benzene content*. Maximum 0.03 volume percent.

(c) *Sulfur content*. Maximum 10 ppm.

(d) *Chemical composition*. Be composed solely of carbon, hydrogen, oxygen, nitrogen, and sulfur.

§ 1090.255 Certified pentane standards.

Pentane designated as certified pentane under § 1090.1000(f) for use under the pentane blending provisions of § 1090.1320(b) must meet the following per-gallon standards:

(a) *Pentane content.* Minimum 95 volume percent.

(b) *Benzene content.* Maximum 0.03 volume percent.

(c) *Sulfur content.* Maximum 10 ppm.

(d) *Chemical composition.* Be composed solely of carbon, hydrogen, oxygen, nitrogen, and sulfur.

§ 1090.260 Gasoline deposit control standards.

(a) Except as specified in subpart G of this part, all gasoline that is sold, offered for sale, dispensed, supplied, offered for supply, or transported to the ultimate consumer for use in motor vehicles or in any off-road engines, or that is transported to a gasoline retailer or WPC must be treated with a detergent that meets the requirements of paragraph (b) of this section at a rate at least as high as the detergent's LAC over the VAR period.

(b) The LAC of the detergent must be determined by the gasoline detergent manufacturer using one of the following methods:

(1) The detergent must comply with one of the deposit control testing methods specified in § 1090.1395.

(2) The detergent must have been certified prior to January 1, 2021, under the intake valve deposit control requirements of 40 CFR 80.165(b) for any of the detergent certification options under 40 CFR 80.163. Di-tertiary butyl disulfide may have been used to meet the test fuel specifications under 40 CFR 80.164 associated with the intake valve deposit control requirements of 40 CFR 80.165(b). A party compliant with this paragraph (b)(2) is exempt from the port fuel injector deposit control requirements of 40 CFR 80.165(a).

(3) A gasoline detergent manufacturer must produce detergents consistent with their detergent certifications for detergents certified prior to January 1, 2021, and with the specific composition information submitted as part of the registration of detergents under 40 CFR 79.21(j) thereafter.

§ 1090.265 Gasoline additive standards.

(a) Any gasoline additive that is added to, intended for adding to, used in, or offered for use in gasoline at any downstream location must meet all the following requirements:

(1) *Registration.* The gasoline additive must be registered by a gasoline additive manufacturer under 40 CFR part 79.

(2) *Sulfur content.* The gasoline additive must contribute less than or equal to 3 ppm on a per-gallon basis to the sulfur content of gasoline when used at the maximum recommended concentration.

(3) *Treatment rate.* Except for oxygenates, the gasoline additive(s) must be used at a maximum treatment rate less than or equal to a combined total of 1.0 volume percent.

(b) Any fuel additive blender that is not otherwise subject to any other requirement in this part and only blends a gasoline additive that meets the requirements of paragraph (a) of this section into gasoline is not subject to any requirement in this part solely due to this gasoline additive blending, except the downstream sulfur per-gallon standard in § 1090.205(c), if all the following conditions are met:

(1) The fuel additive blender blends gasoline additives into gasoline at a concentration less than or equal to a combined total of 1.0 volume percent.

(2) The fuel additive blender does not add any other blendstock into the gasoline except for oxygenates that meet the requirements in § 1090.270.

(c) Any person who blends any fuel additive that does not meet the requirements of paragraphs (a) and (b) of this section is a gasoline manufacturer and must comply with all requirements applicable to a gasoline manufacturer under this part.

(d) Any gasoline additive used or intended for use to comply with the gasoline deposit control requirement in § 1090.260(a) must meet the gasoline deposit control standards under § 1090.260(b).

§ 1090.270 Gasoline oxygenate standards.

(a) All oxygenates designated for blending with gasoline or blended with gasoline must meet the following per-gallon standards:

(1) *Sulfur content.* Maximum 10 ppm.

(2) *Chemical composition.* Be composed solely of carbon, hydrogen, oxygen, nitrogen, and sulfur.

(b) DFE designated for blending into gasoline or blended with gasoline must meet the following additional requirements:

(1) *Denaturant type*. Only PCG, gasoline blendstocks, NGLs, or certified ethanol denaturant that meets the requirements in § 1090.275 may be used as denaturants.

(2) *Denaturant concentration*. The concentration of all denaturants used in DFE must not exceed 3.0 volume percent.

§ 1090.275 Ethanol denaturant standards.

(a) *Standard for all ethanol denaturant*. All ethanol denaturant, certified or uncertified, used to produce DFE must be composed solely of carbon, hydrogen, nitrogen, oxygen, and sulfur.

(b) *Standards for certified ethanol denaturant*. In addition to the requirements of paragraph (a) of this section, certified ethanol denaturant must meet the following requirements:

(1) *Sulfur content per-gallon standard*. Maximum 330 ppm. If the certified ethanol denaturant producer represents a batch of denaturant as having a maximum sulfur content less than 330 ppm on the PTD (for example, less than or equal to 120 ppm), then the actual sulfur content must be less than or equal to the stated value.

(2) *Denaturant type*. Only PCG, gasoline blendstocks, or NGLs may be used to produce certified ethanol denaturant.

§ 1090.285 RFG covered areas.

For purposes of this part, the RFG covered areas are as follows:

(a) RFG covered areas specified in 42 U.S.C. 7545(k)(10)(D):

TABLE 1 TO PARAGRAPH (a)—RFG COVERED AREAS UNDER 42 U.S.C. 7545(k)(10)(D)

Area designation	State	Counties	Independent cities
Los Angeles-Anaheim-Riverside.	California	Los Angeles, Orange, Ventura, San Bernardino,[1] Riverside[2].	
San Diego County	California	San Diego.	
Greater Connecticut	Connecticut	Hartford, Middlesex, New Haven, New London, Tolland, Windham, Fairfield (only the City of Shelton), Litchfield (all except the towns of Bridgewater and New Milford).	
New York-Northern New Jersey-Long Island-Connecticut.	Connecticut	Fairfield (all except the City of Shelton), Litchfield (only the towns of Bridgewater and New Milford).	
	New Jersey	Bergen, Essex, Hudson, Hunterdon, Middlesex, Monmouth, Morris, Ocean, Passaic, Somerset, Sussex, Union.	
	New York	Bronx, Kings, Nassau, New York, Orange, Putnam, Queens, Richmond, Rockland, Suffolk, Westchester.	
Philadelphia-Wilmington-Trenton.	Delaware	Kent, New Castle.	
	Maryland	Cecil.	
	New Jersey	Burlington, Camden, Cumberland, Gloucester, Mercer, Salem.	
	Pennsylvania	Bucks, Chester, Delaware, Montgomery, Philadelphia.	
Chicago-Gary-Lake County.	Illinois	Cook, Du Page, Kane, Lake, McHenry, Will, Grundy (only Aux Sable Township and Goose Lake Township), Kendall (only Oswego Township).	
	Indiana	Lake, Porter.	
Baltimore	Maryland	Anne Arundel, Baltimore, Carroll, Harford, Howard.	Baltimore.
Houston-Galveston-Brazoria.	Texas	Brazoria, Chambers, Fort Bend, Galveston, Harris, Liberty, Montgomery, Waller.	
Milwaukee-Racine	Wisconsin	Kenosha, Milwaukee, Ozaukee, Racine, Washington, Waukesha.	

[1] That portion of San Bernardino County, CA that lies south of latitude 35 degrees, 10 minutes north and west of longitude 115 degrees, 45 minutes west.

[2] That portion of Riverside County, CA that lies to the west of a line described as follows: Beginning at the northeast corner of Section 4, Township 2 South, Range 5 East, a point on the boundary line common to Riverside and San Bernardino Counties; then southerly along section lines to the centerline of the Colorado River Aqueduct; then southeasterly along the centerline of said Colorado River Aqueduct to the southerly line of Section 36, Township 3 South, Range 7 East; then easterly along the township line to the northeast corner of Section 6, Township 4 South, Range 9 East; then southerly along the easterly line of Section 6 to the southeast corner thereof; then easterly along section lines to the northeast corner of Section 10, Township 4 South, Range 9 East; then southerly along section lines to the southeast corner of Section 15, Township 4 South, Range 9 East; then easterly along the section lines to the northeast corner of Section 21, Township 4 South, Range 10 East; then southerly along the easterly line of Section 21 to the southeast corner thereof; then easterly along the northerly line of Section 27 to the northeast corner thereof; then southerly along section lines to the southeast corner of Section 34, Township 4 South, Range 10 East; then easterly along the township line to the northeast corner of Section 2, Township 5 South, Range 10 East; then southerly along the easterly line of Section 2, to the southeast corner thereof; then easterly along the northerly line of Section 12 to the northeast corner thereof; then southerly along the range line to the southwest corner of Section 18, Township 5 South, Range 11 East; then easterly along section lines to the northeast corner of Section 24, Township 5 South, Range 11 East; and then southerly along the range line to the southeast corner of Section 36, Township 8 South, Range 11 East, a point on the boundary line common to Riverside and San Diego Counties.

(b) RFG covered areas based on being reclassified as Severe ozone nonattainment areas under 42 U.S.C. 7511(b):

TABLE 2 TO PARAGRAPH (b)—ADDITIONAL RFG COVERED AREAS UNDER 42 U.S.C. 7545(k)(10)(D)

Area designation	State or district	Counties	Independent cities
Washington, DC-Maryland-Virginia.	District of Columbia	Washington.	
	Maryland	Calvert, Charles, Frederick, Montgomery, Prince George's.	
	Virginia	Arlington, Fairfax, Loudoun, Prince William, Stafford.	Alexandria, Fairfax, Falls Church, Manassas, Manassas Park.
Sacramento Metro	California	Sacramento, Yolo, El Dorado (except Lake Tahoe and its drainage area), Placer,[1] Solano,[2] Sutter[3].	
San Joaquin Valley	California	Fresno, Kings, Madera, Merced, San Joaquin, Stanislaus, Tulare, Kern[4].	

[1] All portions of Placer County except that portion of the County within the drainage area naturally tributary to Lake Tahoe including said Lake, plus that area in the vicinity of the head of the Truckee River described as follows: Commencing at the point common to the aforementioned drainage area crestline and the line common to Townships 15 North and 16 North, Mount Diablo Base and Meridian (M.D.B.&M.), and following that line in a westerly direction to the northwest corner of Section 3, Township 15 North, Range 16 East, M.D.B.&M., thence south along the west line of Sections 3 and 10, Township 15 North, Range 16 East, M.D.B.&M., to the intersection with the said drainage area crestline, thence following the said drainage area boundary in a southeasterly, then northeasterly direction to and along the Lake Tahoe Dam, thence following the said drainage area crestline in a northeasterly, then northwesterly direction to the point of beginning.

[2] That portion of Solano County that lies north and east of a line described as follows: Beginning at the intersection of the westerly boundary of Solano County and the ¼ section line running east and west through the center of Section 34; T. 6 N., R. 2 W., M.D.B.&M.; thence east along said ¼ section line to the east boundary of Section 36, T. 6 N., R. 2 W.; thence south ½ mile and east 2.0 miles, more or less, along the west and south boundary of Los Putos Rancho to the northwest corner of Section 4, T. 5 N., R. 1 W.; thence east along a line common to T. 5 N. and T. 6 N. to the northeast corner of Section 3, T. 5 N., R. 1 E.; thence south along section lines to the southeast corner of Section 10, T. 3 N., R. 1 E.; thence east along section lines to the south ¼ corner of Section 8, T. 3 N., R. 2 E.; thence east to the boundary between Solano and Sacramento Counties.

[3] That portion of Sutter County south of a line connecting the northern border of Yolo Co. to the SW tip of Yuba Co. and continuing along the southern Yuba Co. border to Placer Co.

[4] Boundary between the Kern County and San Joaquin Valley air districts that generally follows the ridge line of the Sierra Nevada and Tehachapi Mountain Ranges. That portion of Kern County that lies west and north of a line described as follows: Beginning at the Kern-Los Angeles County boundary and running north and east along the northwest boundary of the Rancho La Liebre Land Grant to the point of intersection with the range line common to Range 16 West and Range 17 West, San Bernardino Base and Meridian; north along the range line to the point of intersection with the Rancho El Tejon Land Grant boundary; then southeast, northeast, and northwest along the boundary of the Rancho El Tejon Grant to the northwest corner of Section 3, Township 11 North, Range 17 West; then west 1.2 miles; then north to the Rancho El Tejon Land Grant boundary; then northwest along the Rancho El Tejon line to the southeast corner of Section 34, Township 32 South, Range 30 East, Mount Diablo Base and Meridian; then north to the northwest corner of Section 35, Township 31 South, Range 30 East; then northeast along the boundary of the Rancho El Tejon Land Grant to the southwest corner of Section 18, Township 31 South, Range 31 East; then east to the southeast corner of Section 13, Township 31 South, Range 31 East; then north along the range line common to Range 31 East and Range 32 East, Mount Diablo Base and Meridian, to the northwest corner of Section 6, Township 29 South, Range 32 East; then east to the southwest corner of Section 31, Township 28 South, Range 32 East; then north along the range line common to Range 31 East and Range 32 East to the northwest corner of Section 6, Township 28 South, Range 32 East; then west to the southeast corner of Section 36, Township 27 South, Range 31 East; then north along the range line common to Range 31 East and Range 32 East to the Kern-Tulare County boundary.

(c) RFG covered areas based on being classified ozone nonattainment areas at the time that the state requested to opt into RFG under 42 U.S.C. 7545(k)(6)(A)(i):

TABLE 3 TO PARAGRAPH (c)—RFG COVERED AREAS UNDER 42 U.S.C. 7545(k)(6)(A)(i)

Area designation at the time of opt-in	State	Counties	Independent cities
Sussex County	Delaware	Sussex.	
St. Louis, Missouri-Illinois.	Illinois	Jersey, Madison, Monroe, St. Clair.	
	Missouri	Franklin, Jefferson, St. Charles, St. Louis	St. Louis.
Kentucky portion of Louisville.	Kentucky	Jefferson, Bullitt,[1] Oldham[2].	
Kent and Queen Anne's Counties.	Maryland	Kent, Queen Anne's.	
Statewide	Massachusetts	All.	
Strafford, Merrimack, Hillsborough, Rockingham Counties.	New Hampshire	Hillsborough, Merrimack, Rockingham, Strafford.	
Atlantic City	New Jersey	Atlantic, Cape May.	
New Jersey portion of Allentown- Bethlehem-Easton.	New Jersey	Warren.	
Dutchess County	New York	Dutchess.	
Essex County	New York	Essex (the portion of Whiteface Mountain above 4,500 feet in elevation).	
Statewide	Rhode Island	All.	
Dallas-Fort Worth	Texas	Collin, Dallas, Denton, Tarrant.	
Norfolk-Virginia Beach, Newport News (Hampton Roads).	Virginia	James City, York	Chesapeake, Hampton, Newport News, Norfolk, Poquoson, Portsmouth, Suffolk, Virginia Beach, Williamsburg.
Richmond	Virginia	Charles City, Chesterfield, Hanover, Henrico	Colonial Heights, Hopewell, Richmond.

[1] In Bullitt County, KY, beginning at the intersection of Ky 1020 and the Jefferson-Bullitt County Line proceeding to the east along the county line to the intersection of county road 567 and the Jefferson-Bullitt County Line; proceeding south on county road 567 to the junction with Ky 1116 (also known as Zoneton Road); proceeding to the south on KY 1116 to the junction with Hebron Lane; proceeding to the south on Hebron Lane to Cedar Creek; proceeding south on Cedar Creek to the confluence of Floyds Fork turning southeast along a creek that meets Ky 44 at Stallings Cemetery; proceeding west along Ky 44 to the eastern most point in the Shepherdsville city limits; proceeding south along the Shepherdsville city limits to the Salt River and west to a point across the river from Mooney Lane; proceeding south along Mooney Lane to the junction of Ky 480; proceeding west on Ky 480 to the junction with Ky 2237; proceeding south on Ky 2237 to the junction with Ky 61 and proceeding north on Ky 61 to the junction with Ky 1494; proceeding south on Ky 1494 to the junction with the perimeter of the Fort Knox Military Reservation; proceeding north along the military reservation perimeter to Castleman Branch Road; proceeding north on Castleman Branch Road to Ky 44; proceeding a very short distance west on Ky 44 to a junction with Ky 1020 and proceeding north on Ky 1020 to the beginning.

[2] In Oldham County, KY, beginning at the intersection of the Oldham-Jefferson County Line with the southbound lane of Interstate 71; proceeding to the northeast along the southbound lane of Interstate 71 to the intersection of Ky 329 and the southbound lane of Interstate 71; proceeding to the northwest on Ky 329 to the intersection of Zaring Road on Ky 329; proceeding to the east-northeast on Zaring Road to the junction of Cedar Point Road and Zaring Road; proceeding to the north-northeast on Cedar Point Road to the junction of Ky 393 and Cedar Point Road; proceeding to the south-southeast on Ky 393 to the junction of county road 746 (the road on the north side of Reformatory Lake and the Reformatory); proceeding to the east-northeast on county road 746 to the junction with Dawkins Lane (also known as Saddlers Mill Road) and county road 746; Proceeding to follow an electric power line east-northeast across from the junction of county road 746 and Dawkins Lane to the east-northeast across Ky 53 on to the La Grange Water Filtration Plant; proceeding on to the east-southeast along the power line then south across Fort Pickens Road to a power substation on Ky 146; proceeding along the power line south across Ky 146 and the Seaboard System Railroad track to adjoin the incorporated city limits of La Grange; then proceeding east then south along the La Grange city limits to a point abutting the north side of Ky 712; proceeding east-southeast on Ky 712 to the junction of Massie School Road and Ky 712; proceeding to the south-southwest and then north-northwest on Massie School Road to the junction of Ky 53 and Massie School Road; proceeding on Ky 53 to the north-northwest to the junction of Moody Lane and Ky 53; proceeding on Moody Lane to the south-southwest until meeting the city limits of La Grange; then briefly proceeding north following the La Grange city limits to the intersection of the northbound lane of Interstate 71 and the La Grange city limits; proceeding southwest on the northbound lane of Interstate 71 until intersecting with the North Fork of Currys Fork; proceeding south-southwest beyond the confluence of Currys Fork to the south-southwest beyond the confluence of Floyds Fork continuing on to the Oldham-Jefferson County Line and proceeding northwest along the Oldham-Jefferson County Line to the beginning.

(d) RFG covered area that is located in the ozone transport region established by 42 U.S.C. 7511c(a) that a state has requested to opt into RFG under 42 U.S.C. 7545(k)(6)(B)(i)(I):

TABLE 4 TO PARAGRAPH (d)—RFG COVERED AREAS UNDER 42 U.S.C. 7545(k)(6)(B)(i)(I)

State	Counties
Maine	Androscoggin, Cumberland, Kennebec, Knox, Lincoln, Sagadahoc, York.

§ 1090.290 Changes to RFG covered areas and procedures for opting out of RFG.

(a) *New RFG covered areas.* (1) Effective 1 year after an area has been reclassified as a Severe ozone nonattainment area under 42 U.S.C. 7511(b), such Severe area will become a covered area under the RFG program as required by 42 U.S.C. 7545(k)(10)(D). The geographic extent of each such covered area must be the nonattainment area boundaries as specified in 40 CFR part 81, subpart C, for the ozone NAAQS that was the subject of the reclassification.

(2) Any classified ozone nonattainment area identified in 40 CFR part 81, subpart C, as Marginal, Moderate, Serious, or Severe may be included as a covered area upon the request of the governor of the state in which the area is located. EPA must do all the following:

(i) Publish the governor's request in the FEDERAL REGISTER upon receipt.

(ii) Establish an effective date that is not later than 1 year after the request is received unless EPA determines that there is insufficient capacity to supply RFG as required by 42 U.S.C. 7545(k)(6)(A)(ii).

(3) Any ozone attainment area in the ozone transport region established by 42 U.S.C. 7511c(a) may be included as a covered area upon petition by the governor of the state in which the area is located as required by 42 U.S.C. 7545(k)(6)(B)(i). EPA must do all the following:

(i) Publish the governor's request in the FEDERAL REGISTER as soon as practicable after it is received.

(ii) Establish an effective date that is not later than 180 days after the request is received unless EPA determines that there is insufficient capacity to supply RFG as required by 42 U.S.C. 7545(k)(6)(B)(iii).

(b) *Opting out of RFG.* Any area that opted into RFG under 42 U.S.C. 7545(k)(6)(A) or (B) and has not subsequently been reclassified as a Severe ozone nonattainment area may opt out of RFG using the opt-out procedure in paragraph (d) of this section.

(c) *Eligibility for opting out of RFG.* The governor of the state in which a covered area under 42 U.S.C. 7545(k)(10)(D) is located may request that EPA remove the prohibition specified in 42 U.S.C. 7545(k)(5) in such area by following the opt-out procedure specified in paragraph (d) of this section upon one of the following:

(1) Redesignation to attainment for such area for the most stringent ozone NAAQS in effect at the time of redesignation.

(2) Designation as an attainment area for the most stringent ozone NAAQS in effect at the time of the designation. The area must also be redesignated to attainment for the prior ozone NAAQS.

(d) *Procedure for opting out of RFG.* EPA may approve a request from a state asking for either the removal of an RFG opt-in area (or portion of an RFG opt-in area), or the removal of a covered area (or portion of a covered area) under 42 U.S.C. 7545(k)(10)(D) that meets the criteria in paragraph (c) of this section, from the list of RFG covered areas in § 1090.285 if it meets the requirements of paragraph (d)(1) of this section. If EPA approves such a request, an effective date will be set as specified in paragraph (d)(2) of this section. EPA will notify the state in writing of EPA's action on the request and the effective date of the removal when the request is approved.

(1) An opt-out request must be signed by the governor of a state, or the governor's authorized representative, and must include all the following:

(i) A geographic description of each RFG area (or portion of each RFG area) that is covered by the request.

(ii) A description of all the means in which emissions reductions from RFG are relied upon in any approved SIP or any submitted SIP that has not yet been approved by EPA.

(iii) For an RFG area covered by the request where emissions reductions from RFG are relied upon as specified in paragraph (d)(1)(ii) of this section, the request must include all the following information:

(A) Identify whether the state is withdrawing any submitted SIP that has not yet been approved.

(B)(*1*) Identify whether the state intends to submit a SIP revision to any approved SIP or any submitted SIP that has not yet been approved, which relies on emissions reductions from

RFG, and describe any control measures that the state plans to submit to EPA for approval to replace the emissions reductions from RFG.

(*2*) A description of the state's plans and schedule for adopting and submitting any revision to any approved SIP or any submitted SIP that has not yet been approved.

(C) If the state is not withdrawing any submitted SIP that has not yet been approved and does not intend to submit a revision to any approved SIP or any submitted SIP that has not yet been approved, describe why no revision is necessary.

(iv) The governor of a state, or the governor's authorized representative, must submit additional information upon request by EPA.

(2)(i) Except as specified in paragraph (d)(2)(ii) of this section, EPA will set an effective date of the RFG opt-out as requested by the governor, or the governor's authorized representative, but no less than 90 days from EPA's written notification to the state approving the RFG opt-out request.

(ii) Where emissions reductions from RFG are included in an approved SIP or any submitted SIP that has not yet been approved, other than as a contingency measure consisting of a future opt-in to RFG, EPA will set an effective date of the RFG opt-out as requested by the governor, or the governor's authorized representative, but no less than 90 days from the effective date of EPA approval of the SIP revision that removes the emissions reductions from RFG, and, if necessary, provides emissions reductions to make up for those from RFG opt-out.

(iii) Notwithstanding the provisions of paragraphs (d)(2)(i) and (ii) of this section, for an area in the ozone transport region that opted into RFG under 42 U.S.C. 7545(k)(6)(B), EPA will not set the effective date for removal of the area earlier than 4 years after the commencement date of opt-in.

(4) EPA will publish a notice in the FEDERAL REGISTER announcing the approval of an RFG opt-out request and its effective date.

(5) Upon the effective date for the removal of an RFG area (or portion of an RFG area) included in an approved request, such geographic area will no longer be considered an RFG covered area.

(e) *Revising list of RFG covered areas.* EPA will periodically publish a final rule revising the list of RFG covered areas in § 1090.285.

§ 1090.295 Procedures for relaxing the federal 7.8 psi RVP standard.

(a) EPA may approve a request from a state asking for relaxation of the federal 7.8 psi RVP standard for any area (or portion of an area) required to use such gasoline, if it meets the requirements of paragraph (b) of this section. If EPA approves such a request, an effective date will be set as specified in paragraph (c) of this section. EPA will notify the state in writing of EPA's action on the request and the effective date of the relaxation when the request is approved.

(b) The request must be signed by the governor of the state, or the governor's authorized representative, and must include all the following:

(1) A geographic description of each federal 7.8 psi gasoline area (or portion of such area) that is covered by the request.

(2) A description of all the means in which emissions reduction from the federal 7.8 psi gasoline are relied upon in any approved SIP or in any submitted SIP that has not yet been approved by EPA.

(3) For any federal 7.8 psi gasoline area covered by the request where emissions reductions from the federal 7.8 psi gasoline are relied upon as specified in paragraph (b)(2) of this section, the request must include the following information:

(i) Identify whether the state is withdrawing any submitted SIP that has not yet been approved.

(ii)(A) Identify whether the state intends to submit a SIP revision to any approved SIP or any submitted SIP that has not yet been approved, which relies on emissions reductions from federal 7.8 psi gasoline, and describe any control measures that the state plans to submit to EPA for approval to replace the emissions reductions from federal 7.8 psi gasoline.

(B) A description of the state's plans and schedule for adopting and submitting any revision to any approved SIP

or any submitted SIP that has not yet been approved.

(iii) If the state is not withdrawing any submitted SIP that has not yet been approved and does not intend to submit a revision to any approved SIP or any submitted SIP that has not yet been approved, describe why no revision is necessary.

(4) The governor of a state, or the governor's authorized representative, must submit additional information upon request by EPA.

(c)(1) Except as specified in paragraph (c)(2) of this section, EPA will set an effective date of the relaxation of the federal 7.8 psi RVP standard as requested by the governor, or the governor's authorized representative, but no less than 90 days from EPA's written notification to the state approving the relaxation request.

(2) Where emissions reductions from the federal 7.8 psi gasoline are included in an approved SIP or any submitted SIP that has not yet been approved, EPA will set an effective date of the relaxation of the federal 7.8 psi RVP standard as requested by the governor, or the governor's authorized representative, but no less than 90 days from the effective date of EPA approval of the SIP revision that removes the emissions reductions from the federal 7.8 psi gasoline, and, if necessary, provides emissions reductions to make up for those from the federal 7.8 psi gasoline relaxation.

(d) EPA will publish a notice in the FEDERAL REGISTER announcing the approval of any federal 7.8 psi gasoline relaxation request and its effective date.

(e) Upon the effective date for the relaxation of the federal 7.8 psi RVP standard in a subject area (or portion of a subject area) included in an approved request, such geographic area will no longer be considered a federal 7.8 psi gasoline area.

(f) EPA will periodically publish a final rule revising the list of areas subject to the federal 7.8 psi RVP standard in § 1090.215(a)(2).

Subpart D—Diesel Fuel and ECA Marine Fuel Standards

§ 1090.300 Overview and general requirements.

(a) Diesel fuel is subject to the ULSD standards in § 1090.305, except as follows:

(1) Alternative sulfur standards apply for 500 ppm LM diesel fuel and ECA marine fuel as specified in §§ 1090.320 and 1090.325, respectively.

(2) Exemption provisions apply as specified in subpart G of this part.

(b) Diesel fuel additives must meet the requirements in § 1090.310.

(c) A diesel fuel manufacturer or diesel fuel additive manufacturer must demonstrate compliance with the standards in this subpart by measuring fuel parameters in accordance with subpart N of this part.

(d) All the standards in this part apply to diesel fuel and diesel fuel additives on a per-gallon basis.

(e)(1) No person may produce, import, sell, offer for sale, distribute, offer to distribute, supply, offer for supply, dispense, store, transport, or introduce into commerce any diesel fuel, ECA marine fuel, or diesel fuel additive that does not meet any standard set forth in this subpart.

(2) Notwithstanding paragraph (e)(1) of this section, an importer may import diesel fuel that does not comply with the standards set forth in this subpart if all the following conditions are met:

(i) The importer offloads the imported diesel fuel into one or more tanks that are physically located at the same import facility at which the imported diesel fuel first arrives in the United States or at a facility to which the imported diesel fuel is directly transported from the import facility at which the imported diesel fuel first arrived in the United States.

(ii) The importer uses the imported diesel fuel to produce one or more new batches of diesel fuel.

(iii) The importer certifies each new batch of diesel fuel under § 1090.1000(c) and demonstrates that it complies with the standards in this subpart by measuring fuel parameters in accordance

with subpart N of this part before custody or title to each new batch of diesel fuel is transferred.

(f) No fuel or fuel additive manufacturer may introduce into commerce diesel fuel or diesel fuel additives that are not ''substantially similar'' under 42 U.S.C. 7545(f)(1) or permitted under a waiver granted under 42 U.S.C. 7545(f)(4).

(g) Distillate global marine fuel that does not qualify for an exemption under § 1090.650 is subject to the standards, requirements, and prohibitions that apply for ULSD under this part.

(h) No person may introduce used motor oil, or used motor oil blended with diesel fuel, into the fuel system of model year 2007 or later diesel motor vehicles or engines or model year 2011 or later nonroad diesel vehicles or engines (not including locomotive or marine diesel engines).

§ 1090.305 ULSD standards.

(a) *Overview.* Except as specified in § 1090.300(a), diesel fuel must meet the ULSD per-gallon standards of this section.

(b) *Sulfur standard.* Maximum sulfur content of 15 ppm.

(c) *Cetane index or aromatic content.* Diesel fuel must meet one of the following standards:

(1) Minimum cetane index of 40.

(2) Maximum aromatic content of 35 volume percent.

§ 1090.310 Diesel fuel additives standards.

(a) Except as specified in paragraph (b) and (c) of this section, diesel fuel additives blended into diesel fuel that is subject to the standards in § 1090.305 must have a sulfur concentration less than or equal to 15 ppm on a per-gallon basis.

(b) Diesel fuel additives do not have to comply with paragraph (a) of this section if all the following conditions are met:

(1) The additive is added to diesel fuel in a quantity less than 1.0 volume percent of the resultant mixture of additive and diesel fuel.

(2) The PTD for the diesel fuel additive complies with the requirements in § 1090.1120(b).

(3) The additive is not commercially available as a retail product for ultimate consumers.

(c) The provisions of this section do not apply to additives used with 500 ppm LM diesel fuel or ECA marine fuel.

§ 1090.315 Heating oil, kerosene, ECA marine fuel, and jet fuel provisions.

Heating oil, kerosene, ECA marine fuel, and jet fuel must not be sold for use in motor vehicles or nonroad equipment and are not subject to the ULSD standards in § 1090.305 unless also designated as ULSD under § 1090.1015(a).

§ 1090.320 500 ppm LM diesel fuel standards.

(a) *Overview.* 500 ppm LM diesel fuel produced or distributed by a transmix processor or pipeline operator under § 1090.515 must meet the per-gallon standards of this section.

(b) *Sulfur standard.* Maximum sulfur content of 500 ppm.

(c) *Cetane index or aromatic content.* The standard for cetane index or aromatic content in § 1090.305(c).

§ 1090.325 ECA marine fuel standards.

(a) *Overview.* Except as specified in paragraph (c) of this section, ECA marine fuel must meet the per-gallon standards of this section.

(b) *Sulfur standard.* Maximum sulfur content of 1,000 ppm.

(c) *Exceptions.* The standards in paragraph (b) of this section do not apply to the following:

(1) Residual fuel made available for use in a steamship or C3 marine vessel if the U.S. government exempts or excludes the vessel from MARPOL Annex VI fuel standards. Diesel fuel and other distillate fuel used in diesel engines operated on such vessels is subject to the standards in this section instead of the standards in § 1090.305 or § 1090.320.

(2) Distillate global marine fuel that is exempt under § 1090.650.

Subpart E [Reserved]

Subpart F—Transmix and Pipeline Interface Provisions

§ 1090.500 Gasoline produced from blending transmix into PCG.

(a) *Applicability*. (1) Except as specified in paragraph (a)(2) of this section, a transmix blender that blends transmix into PCG must comply with the requirements of this section.

(2) Small volumes of fuel that are captured in pipeline sumps or trapped in pipeline pumps or valve manifolds and that are injected back into batches of gasoline or diesel fuel are exempt from the requirements in this section.

(b) *Requirements*. (1) The distillation end-point of the resultant transmix-blended gasoline must not exceed 437 degrees Fahrenheit.

(2) The resultant transmix-blended gasoline must meet the downstream sulfur per-gallon standard in § 1090.205(c) and the applicable RVP standard in § 1090.215.

(3) The transmix blender must comply with the recordkeeping requirements in § 1090.1255.

(4) The transmix blender must maintain and follow a written quality assurance program that meets the requirements of paragraph (c) of this section.

(5) In the event that the test result for any sample collected under the quality assurance program specified in paragraph (c) of this section indicates that the gasoline does not comply with any of the applicable standards in this part, the transmix blender must do all the following:

(i) Immediately take steps to stop the sale of the gasoline that was sampled.

(ii) Take reasonable steps to determine the cause of the noncompliance and prevent future instances of noncompliance.

(iii) Notify EPA of the noncompliance.

(iv) If the transmix was blended by a computer controlled in-line blending system, increase the rate of sampling and testing to a minimum frequency of once per week and a maximum frequency of once per day and continue the increased frequency of sampling and testing until the results of 10 consecutive samples and tests indicate that the gasoline complies with applicable standards, at which time the sampling and testing may be conducted at the original frequency.

(c) *Quality assurance program*. (1) The quality assurance program must be designed to assure that the type and amount of transmix blended into PCG will not cause violations of the applicable fuel quality standards.

(2) Except as specified in paragraph (c)(3) of this section, as a part of the quality assurance program, a transmix blender must collect samples of gasoline after blending transmix and test the samples to ensure the end-point temperature of the resultant transmix-blended gasoline does not exceed 437 degrees Fahrenheit, using one of the following sampling methods:

(i) For transmix that is blended in a tank (including a tank on a barge), collect a representative sample of the resultant transmix-blended gasoline following each occasion transmix is blended.

(ii) For transmix that is blended by a computer controlled in-line blending system, the transmix blender must collect composite samples of the resultant transmix-blended gasoline at least twice each calendar month during which transmix is blended.

(3) Any transmix blender may petition EPA for approval of a quality assurance program that does not include the minimum sampling and testing requirements of paragraph (c)(2) of this section. To seek approval for such an alternative quality assurance program, the transmix blender must submit a petition to EPA that includes all the following:

(i) A detailed description of the quality assurance procedures to be carried out at each location where transmix is blended into PCG, including a description of how the transmix blender proposes to determine the ratio of transmix that can be blended with PCG without violating any of the applicable standards in this part, and a description of how the transmix blender proposes to determine that the gasoline produced by the transmix blending operation meets the applicable standards.

(ii) A letter signed by the RCO or their delegate stating that the information contained in the submission is

true to the best of their belief must accompany the petition.

(iii) A transmix blender that petitions EPA to use an alternative quality assurance program must comply with any request by EPA for additional information or any other requirements that EPA includes as part of EPA's evaluation of the petition. However, the transmix blender may withdraw their petition or approved use of an alternative quality assurance program at any time, upon notice to EPA.

§ 1090.505 Gasoline produced from TGP.

(a) *General provisions.* (1) A transmix processor or blending manufacturer that produces gasoline from TGP must meet the requirements of this section.

(2) A transmix processor must not use any feedstock other than transmix to produce TGP.

(3) A transmix processor or blending manufacturer may produce gasoline using only TGP, a combination of TGP and PCG, a combination of TGP and blendstock(s), or a combination TGP, PCG, and blendstock(s) under the provisions of this section. A transmix processor or blending manufacturer may also blend fuel additives into gasoline in accordance with §§ 1090.260 and 1090.265.

(b) *Demonstration of compliance with sulfur per-gallon standard.* (1) A transmix processor or blending manufacturer that produces gasoline with TGP must meet one of the following sulfur standards for each batch of gasoline they produce, as applicable:

(i) Each batch of gasoline produced from only TGP or both TGP and PCG must comply with the downstream sulfur per-gallon standard in § 1090.205(c).

(ii) Each batch of gasoline produced from a combination of TGP and any blendstock must comply with the fuel manufacturing facility gate sulfur per-gallon standard in § 1090.205(b).

(2) A transmix processor or blending manufacturer that produces gasoline with TGP must demonstrate compliance with the applicable sulfur standard in paragraph (b)(1) of this section by measuring the sulfur content of each batch of gasoline they produce in accordance with subpart N of this part.

(c) *Demonstration of compliance with sulfur and benzene average standards.* (1) A transmix processor or blending manufacturer that produces gasoline with TGP must exclude TGP and PCG used to produce gasoline under the provisions of this section from their compliance calculations to demonstrate compliance with the sulfur and benzene average standards in §§ 1090.205(a) and 1090.210(a) and (b), respectively. A transmix processor or blending manufacturer that exclusively produces gasoline from only TGP or both TGP and PCG is deemed to be in compliance with the sulfur and benzene average standards in §§ 1090.205(a) and 1090.210(a) and (b), respectively.

(2) A transmix processor or blending manufacturer that produces gasoline with TGP must include all blendstocks other than TGP and PCG in their compliance calculations to demonstrate compliance with the sulfur and benzene average standards in §§ 1090.205(a) and 1090.210(a) and (b), respectively.

(3) A transmix processor or blending manufacturer that produces gasoline by adding blendstock to TGP must comply with § 1090.1325.

(d) *Demonstration of compliance with RVP standard.* A transmix processor or blending manufacturer that produces gasoline with TGP must demonstrate that each batch of gasoline they produce meets the applicable RVP standard in § 1090.215 by measuring the RVP of each batch in accordance with subpart N of this part.

(e) *Distillation point determination.* A transmix processor or blending manufacturer that produces gasoline with TGP must determine the following distillation parameters for each batch of gasoline they produce in accordance with subpart N of this part:

(1) T10.

(2) T50.

(3) T90.

(4) End-point.

(5) Distillation residue.

§ 1090.510 Diesel and distillate fuel produced from TDP.

(a) A transmix processor must not use any feedstock other than transmix to produce TDP.

(b) A transmix processor must demonstrate that each batch of diesel fuel

or distillate fuel produced from TDP meets the applicable standard in subpart D of this part and must comply with all other requirements applicable to a diesel fuel or distillate fuel manufacturer under this part.

(c) A transmix processor that produces 500 ppm LM diesel fuel from TDP must also comply with the requirements in § 1090.515.

§ 1090.515 500 ppm LM diesel fuel produced from TDP.

(a) *Applicability*. A transmix processor that produces 500 ppm LM diesel fuel from TDP must comply with the requirements of this section and the standards for 500 ppm LM diesel fuel specified in § 1090.320.

(b) *Blending component limitation*. A transmix processor may only use the following components to produce 500 ppm LM diesel fuel:

(1) TDP.

(2) ULSD.

(3) Diesel fuel additives that comply with the requirements in § 1090.310.

(c) *Volume requirements*. A party that handles 500 ppm LM diesel fuel must calculate the volume of 500 ppm LM diesel fuel received versus the volume delivered and used on a compliance period basis. An increase in the volume of 500 ppm LM diesel fuel delivered compared to the volume received must be due solely to one or more of the following:

(1) Normal pipeline interface cutting practices under paragraph (e)(1) of this section.

(2) The addition of ULSD to a retail outlet or WPC 500 ppm LM diesel fuel storage tank under paragraph (e)(2) of this section.

(d) *Use restrictions*. 500 ppm LM diesel fuel may only be used in locomotive or marine engines that are not required to use ULSD under 40 CFR 1033.815 or 40 CFR 1042.660, respectively. No person may use 500 ppm LM diesel fuel in locomotive or marine engines that are required to use ULSD, in any nonroad vehicle or engine, or in any motor vehicle engine.

(e) *Segregation requirement*. A transmix processor or distributor must segregate 500 ppm LM diesel fuel from other fuels except as follows:

(1) A pipeline operator may ship 500 ppm LM diesel fuel by pipeline provided that the 500 ppm LM diesel fuel does not come into physical contact in the pipeline with distillate fuels that have a sulfur content greater than 15 ppm. If 500 ppm LM diesel fuel is shipped by pipeline adjacent to ULSD, the pipeline operator must cut ULSD into the 500 ppm LM diesel fuel.

(2) A WPC or retailer of 500 ppm LM diesel fuel may introduce ULSD into a storage tank that contains 500 ppm LM diesel fuel, provided that the other requirements of this section are satisfied. The resultant mixture must be designated as 500 ppm LM diesel fuel.

(f) *Party limit*. No more than 4 separate parties may handle the 500 ppm LM diesel fuel between the producer and the ultimate consumer.

(g) *Compliance plan*. For each facility, a transmix processor that produces 500 ppm LM diesel fuel must obtain approval from EPA for a compliance plan at least 60 days prior to producing 500 ppm LM diesel fuel. The compliance plan must detail how the transmix processor intends to meet all the following requirements:

(1) Demonstrate how the 500 ppm LM diesel fuel will be segregated by the producer through to the ultimate consumer from fuel having other designations in order to comply with the segregation requirement in paragraph (e) of this section.

(2) Demonstrate that the end users of 500 ppm LM diesel fuel will also have access to ULSD for use in those engines that require ULSD.

(3) Identify the parties that will handle the 500 ppm LM diesel fuel through to the ultimate consumer.

(4) Identify all ultimate consumers that will be supplied with the 500 ppm LM diesel fuel.

(5) Demonstrate how misfueling of 500 ppm LM diesel fuel into vehicles, engines, or equipment that require the use of ULSD will be prevented.

(6) Include an EPA registration number.

§ 1090.520 Handling practices for pipeline interface that is not transmix.

(a) Subject to the limitations in paragraph (b) of this section, a pipeline operator may cut pipeline interface

from two batches of gasoline subject to EPA standards that are shipped adjacent to each other by pipeline into either or both these batches of gasoline provided that this action does not cause or contribute to a violation of the standards in this part.

(b) During the summer season, a pipeline operator must not cut pipeline interface from two batches of gasoline subject to different RVP standards that are shipped adjacent to each other by pipeline into the gasoline batch that is subject to the more stringent RVP standard. For example, during the summer season, a pipeline operator must not cut pipeline interface from a batch of RFG shipped adjacent to a batch of conventional gasoline into the batch of RFG.

Subpart G—Exemptions, Hardships, and Special Provisions

§ 1090.600 General provisions.

(a) Gasoline, diesel fuel, or IMO marine fuel subject to an exemption under this subpart is exempt from the standards and provisions of this part as specified in this subpart.

(b) Fuel that does not meet all the requirements and conditions specified in this subpart for an exemption is subject to all applicable standards and requirements of this part.

§ 1090.605 National security and military use exemptions.

(a) Fuel, fuel additive, and regulated blendstock that is produced, imported, sold, offered for sale, supplied, offered for supply, stored, dispensed, or transported for use in the following tactical military vehicles, engines, or equipment, including locomotive and marine engines, are exempt from the standards specified in this part:

(1) Tactical military vehicles, engines, or equipment, including locomotive or marine engines, that have an EPA national security exemption from the motor vehicle emission standards under 40 CFR parts 85 or 86, or from the nonroad engine emission standards under 40 CFR parts 89, 92, 94, 1042, or 1068.

(2) Tactical military vehicles, engines, or equipment, including locomotive or marine engines, that are not subject to a national security exemption from vehicle or engine emissions standards specified in paragraph (a)(1) of this section but, for national security purposes (*e.g.*, for purposes of readiness, including training, for deployment overseas), need to be fueled on the same fuel as the vehicles, engines, or equipment that EPA has granted such a national security exemption.

(b) The exempt fuel must meet all the following requirements:

(1) It must be accompanied by PTDs that meet the requirements of subpart L of this part.

(2) It must be segregated from nonexempt fuel at all points in the distribution system.

(3) It must be dispensed from a fuel dispenser stand, fueling truck, or tank that is labeled with the appropriate designation of the fuel.

(4) It must not be used in any vehicles, engines, or equipment, including locomotive and marine engines, other than those specified in paragraph (a) of this section.

§ 1090.610 Temporary research, development, and testing exemptions.

(a) *Requests for an exemption*. (1) Any person may receive an exemption from the provisions of this part for fuel used for research, development, or testing (''R&D'') purposes by submitting the information specified in paragraph (c) of this section as specified in § 1090.10.

(2) Any person that is performing emissions certification testing for a motor vehicle or motor vehicle engine under 42 U.S.C. 7525 or nonroad engine or nonroad vehicle under 42 U.S.C. 7546 is exempt from the provisions of this part for the fuel they are using for emissions certification testing if they have an exemption under 40 CFR parts 85 and 86 to perform such testing.

(b) *Criteria for an R&D exemption*. For an R&D exemption to be granted, the person requesting an exemption must meet all the following conditions:

(1) Demonstrate that the exemption is for an appropriate R&D purpose.

(2) Demonstrate that an exemption is necessary.

(3) Design an R&D program that is reasonable in scope.

(4) Have a degree of control consistent with the purpose of the program and EPA's monitoring requirements.

(5) Meet the requirements specified in paragraphs (c) and (d) of this section.

(c) *Information required to be submitted.* To aid in demonstrating each of the elements in paragraph (b) of this section, the person requesting an exemption must include, at a minimum, all the following information:

(1) A concise statement of the purpose of the program demonstrating that the program has an appropriate R&D purpose.

(2) An explanation of why the stated purpose of the program is unable to be achieved in a practicable manner without meeting the requirements of this part.

(3) A demonstration of the reasonableness of the scope of the program, including all the following:

(i) An estimate of the program's duration in time (including beginning and ending dates).

(ii) An estimate of the maximum number of vehicles, engines, and equipment involved in the program, and the number of miles and engine hours that will be accumulated on each.

(iii) The manner in which the information on vehicles, engines, or equipment used in the program will be recorded and made available to EPA upon request.

(iv) The quantity of the fuel that does not comply with the requirements of this part, as applicable.

(v) The specific applicable standard(s) of this part that would apply to the fuel expected to be used in the program.

(4) With regard to control, a demonstration that the program affords EPA a monitoring capability, including all the following:

(i) A description of the technical and operational aspects of the program.

(ii) The site(s) of the program (including facility name, street address, city, county, state, and ZIP code).

(iii) The manner in which information on vehicles, engines, and equipment used in the program will be recorded and made available to EPA upon request.

(iv) The manner in which information on the fuel used in the program (including quantity, fuel properties, name, address, telephone number, and contact person of the supplier, and the date received from the supplier) will be recorded and made available to EPA upon request.

(v) The manner in which the party will ensure that the fuel will be segregated from fuel that meets the requirements of subparts C and D of this part, as applicable, and how fuel dispensers will be labeled to ensure that the fuel is not dispensed for use in motor vehicles or nonroad engines, vehicles, or equipment, including locomotive or marine engines, that are part of the R&D test program.

(vi) The name, business address, telephone number, and title of the person(s) in the organization requesting an exemption from whom further information on the application may be obtained.

(vii) The name, business address, telephone number, and title of the person(s) in the organization requesting an exemption who is responsible for recording and making available the information specified in this paragraph (c), and the location where such information will be maintained.

(viii) Any other information requested by EPA to determine whether the test program satisfies the criteria of paragraph (b) of this section.

(d) *Additional requirements.* (1) The PTDs associated with fuel must comply with the requirements of subpart L of this part.

(2) The fuel must be designated as exempt fuel by the fuel manufacturer or supplier, as applicable.

(3) The fuel must be kept segregated from non-exempt fuel at all points in the distribution system.

(4) The fuel must not be sold, distributed, offered for sale or distribution, dispensed, supplied, offered for supply, transported to or from, or stored by a retail outlet or WPC facility, unless the WPC facility is associated with the R&D program that uses the fuel.

(5) At the completion of the program, any emission control systems or elements of design that are damaged or rendered inoperative must be replaced on vehicles remaining in service or the

responsible person will be liable for a violation of 42 U.S.C. 7522(a)(3), unless sufficient evidence is supplied that the emission controls or elements of design were not damaged.

(e) *Approval of exemption.* EPA may grant an R&D exemption upon a demonstration that the requirements of this section have been met. The R&D exemption approval may include such terms and conditions as EPA determines necessary to monitor the exemption and to carry out the purposes of this part, including restoration of emission control systems.

(1) The volume of fuel subject to the approval must not exceed the estimated amount in paragraph (c)(3)(iv) of this section, unless EPA grants an approval for a greater amount.

(2) Any exemption granted under this section will expire at the completion of the test program or 1 year from the date of approval, whichever occurs first, and may only be extended upon re-application consistent with the requirements of this section.

(3) If any information required by paragraph (c) of this section changes after approval of the exemption, the responsible person must notify EPA in writing immediately.

(f) *Notification of completion.* Any person with an approved exemption under this section must notify EPA in writing within 30 days after completion of the R&D program.

§ 1090.615 Racing and aviation exemptions.

(a) Fuel, fuel additive, and regulated blendstock that is used in aircraft, or racing vehicles or racing boats in sanctioned racing events, is exempt from the standards in subparts C and D of this part if all the requirements of this section are met.

(b) The fuel, fuel additive, or regulated blendstock is identified on PTDs and on any fuel dispenser from which the fuel, fuel additive, or regulated blendstock is dispensed as restricted for use either in aircraft or in racing motor vehicles or racing boats that are used only in sanctioned racing events.

(c) The fuel, fuel additive, or regulated blendstock is completely segregated from all other non-exempt fuel, fuel additive, or regulated blendstock throughout production, distribution, and sale to the ultimate consumer.

(d) The fuel, fuel additive, or regulated blendstock is not made available for use as gasoline or diesel fuel subject to the standards in subparts C and D of this part, as applicable, or dispensed for use in motor vehicles or nonroad engines, vehicles, or equipment, including locomotive or marine engines, except for those used only in aircraft or in sanctioned racing events.

§ 1090.620 Exemptions for Guam, American Samoa, and the Commonwealth of the Northern Mariana Islands.

Fuel that is produced, imported, sold, offered for sale, supplied, offered for supply, stored, dispensed, or transported for use in the territories of Guam, American Samoa, or the Commonwealth of the Northern Mariana Islands, is exempt from the standards in subparts C and D of this part if all the following requirements are met:

(a) The fuel is designated by the fuel manufacturer as gasoline, diesel fuel, or ECA marine fuel for use only in Guam, American Samoa, or the Commonwealth of the Northern Mariana Islands.

(b) The fuel is used only in Guam, American Samoa, or the Commonwealth of the Northern Mariana Islands.

(c) The fuel is accompanied by PTDs that meet the requirements of subpart L of this part.

(d) The fuel is completely segregated from non-exempt fuel at all points from the point the fuel is designated as exempt fuel for use only in Guam, American Samoa, or the Commonwealth of the Northern Mariana Islands, while the exempt fuel is in the United States (including an ECA or an ECA associated area under 40 CFR 1043.20) but outside these territories.

§ 1090.625 Exemptions for California gasoline and diesel fuel.

(a) *California gasoline and diesel fuel exemption.* California gasoline or diesel fuel that complies with all the requirements of this section is exempt from all other provisions of this part.

(b) *California gasoline and diesel fuel requirements.* (1) Each batch of California gasoline or diesel fuel must be designated as such by its fuel manufacturer.

(2) Designated California gasoline or diesel fuel must be segregated from fuel that is not California gasoline or diesel fuel at all points in the distribution system.

(3) Except for as specified in paragraph (d) or (e) of this section, designated California gasoline or diesel fuel must ultimately be used only in the state of California.

(4) Transferors and transferees of California gasoline or diesel fuel produced outside the state of California must meet the PTD requirements of subpart L of this part.

(5) Each transferor and transferee of California gasoline or diesel fuel produced outside the state of California must maintain copies of the PTDs as specified in subpart M of this part.

(6) California gasoline or diesel fuel must not be used in any part of the United States outside of the state of California unless the manufacturer or distributor recertifies or redesignates the batch of California gasoline or diesel fuel as specified in paragraph (d) or (e) of this section.

(c) *Use of California test methods and offsite sampling procedures.* For any gasoline or diesel fuel that is not California gasoline or diesel fuel and that is either produced at a facility located in the state of California or is imported from outside the United States into the state of California, the manufacturer must do one of the following:

(1) Comply with the sampling and testing provisions in subpart N of this part, as applicable.

(2) Sample and test using methods approved in Title 13 of the California Code of Regulations.

(3) Sample and test per a current and valid protocol agreement between the fuel manufacturer and the California Air Resources Board or by Executive Order from the California Air Resources Board. Such protocols or Executive Orders must be provided to EPA upon request.

(d) *California gasoline used outside of California.* California gasoline may be used in any part of the United States outside of the state of California if the manufacturer or distributor of the California gasoline does one of the following:

(1) Recertifies the California gasoline as gasoline under this part and includes the recertified gasoline in their average standard compliance calculations.

(2) Designates the California gasoline as gasoline under this part without recertification and does all the following:

(i) Demonstrates that the fuel meets all applicable requirements for California reformulated gasoline under Title 13 of the California Code of Regulations.

(ii) Properly redesignates the fuel under § 1090.1010(b)(2)(vi).

(iii) Generates PTDs under subpart L of this part.

(iv) Keeps records under subpart M of this part.

(v) Does not include the California gasoline in their average standard compliance calculations.

(e) *California diesel used outside of California.* California diesel fuel may be used in any part of the United States outside of the state of California and is deemed to meet the standards in subpart D of this part without recertification if the fuel designated as California diesel fuel meets all applicable requirements for diesel fuel under Title 13 of the California Code of Regulations and the manufacturer or distributor of the fuel does all the following:

(1) The manufacturer or distributor properly redesignates the fuel under § 1090.1015(b)(3)(iii).

(2) The manufacturer or distributor generates PTDs under subpart L of this part.

(3) The manufacturer or distributor keeps records under subpart M of this part.

§ 1090.630 Exemptions for Alaska, Hawaii, Puerto Rico, and the U.S. Virgin Islands summer gasoline.

Summer gasoline that is produced, imported, sold, offered for sale, supplied, offered for supply, stored, dispensed, or transported for use in the Alaska, Hawaii, Puerto Rico, or the U.S. Virgin Islands, is exempt from the RVP standards in § 1090.215 if all the following requirements are met:

(a) The summer gasoline is designated by the fuel manufacturer as summer gasoline for use only in Alaska, Hawaii, Puerto Rico, or the U.S. Virgin Islands.

(b) The summer gasoline is used only in Alaska, Hawaii, Puerto Rico, or the U.S. Virgin Islands.

(c) The summer gasoline is accompanied by PTDs that meet the requirements of subpart L of this part.

(d) The summer gasoline is completely segregated from non-exempt gasoline at all points from the point the summer gasoline is designated as exempt fuel for use only in Alaska, Hawaii, Puerto Rico, or the U.S. Virgin Islands, while the exempt summer gasoline is in the United States but outside these states or territories.

§ 1090.635 Refinery extreme unforeseen hardship exemption.

(a) In appropriate extreme, unusual, and unforeseen circumstances (*e.g.*, circumstances like a natural disaster or refinery fire; not financial or supplier difficulties) that are clearly outside the control of the refiner and that could not have been avoided by the exercise of prudence, diligence, and due care, EPA may permit a refiner, for a brief period, to distribute fuel that is exempt from the standards in subparts C and D of this part if all the following requirements are met:

(1) It is in the public interest to do so (*e.g.*, distribution of the nonconforming fuel will not damage vehicles or engines and is necessary to meet projected temporary shortfalls in the supply of the fuel in a state or region of the United States for which the shortfall is unable to otherwise be compensated for).

(2) The refiner exercised prudent planning and was not able to avoid the violation and has taken all reasonable steps to minimize the extent of the nonconformity.

(3) The refiner shows how compliance will be achieved as expeditiously as possible.

(4) The refiner agrees to make up any air quality detriment associated with the nonconforming fuel, where practicable.

(5) The refiner pays to the U.S. Treasury an amount equal to the economic benefit of the nonconformity minus the amount expended under paragraph (a)(4) of this section, in making up the air quality detriment.

(b) Hardship applications under this section must be submitted to EPA as specified in § 1090.10 and must contain a letter signed by the RCO, or their delegate, stating that the information contained in the application is true and accurate to the best of their knowledge.

§ 1090.640 Exemptions from the gasoline deposit control requirements.

(a) Gasoline that is used to produce E85 is exempt from the gasoline deposit control requirements in § 1090.260.

(b) Any person that uses the exemption in paragraph (a) of this section must keep records to demonstrate that such exempt gasoline was used to produce E85 and was not distributed from a terminal for use as gasoline.

§ 1090.645 Exemption for exports of fuels, fuel additives, and regulated blendstocks.

(a) Fuel, fuel additive, and regulated blendstock that is exported for sale outside of the United States is exempt from the standards in subparts C and D of this part if all the following requirements are met:

(1) The fuel, fuel additive, or regulated blendstock is designated for export by the fuel manufacturer, fuel additive manufacturer, or regulated blendstock producer.

(2) The fuel, fuel additive, or regulated blendstock designated for export is accompanied by PTDs that meet the requirements of subpart L of this part.

(3) The fuel manufacturer, fuel additive manufacturer, or regulated blendstock producer keeps records that demonstrate that the fuel, fuel additive, or regulated blendstock was ultimately exported from the United States.

(4) The fuel, fuel additive, or regulated blendstock is completely segregated from non-exempt fuels, fuel additives, and regulated blendstocks from the point the fuel, fuel additive, or regulated blendstock is designated for export to the point where it is ultimately exported from the United States.

(5) Fuel, fuel additive, or regulated blendstock certified and designated for export may be certified for use in the United States if all the applicable requirements of this part are met.

(b) Any fuel dispensed from a retail outlet within the geographic boundaries of the United States is not exempt under this section.

§ 1090.650 Distillate global marine fuel exemption.

(a) The standards of subpart D of this part do not apply to distillate global marine fuel that is produced, imported, sold, offered for sale, supplied, offered for supply, stored, dispensed, or transported for use in steamships or Category 3 marine vessels when operating outside of ECA boundaries.

(b) Exempt distillate global marine fuel under paragraph (a) of this section must meet all the following requirements:

(1) The fuel must not exceed 0.50 weight percent sulfur (5,000 ppm).

(2) The fuel must be accompanied by PTDs as specified in § 1090.1115.

(3) The fuel must be designated as specified in § 1090.1015.

(4) The fuel must be segregated from non-exempt fuel at all points in the distribution system.

(5) The fuel must not be used in vehicles, engines, or equipment other than those referred to in paragraph (a) of this section.

(c)(1) Fuel that does not meet the requirements specified in paragraph (b) of this section is subject to the standards, requirements, and prohibitions that apply for ULSD under this part.

(2) Any person who produces, imports, sells, offers for sale, supplies, offers for supply, stores, dispenses, or transports distillate global marine fuel without meeting the applicable recordkeeping requirements in subpart M of this part must not claim the fuel is exempt from the standards, requirements, and prohibitions that apply for ULSD under this part.

Subpart H—Averaging, Banking, and Trading Provisions

§ 1090.700 Compliance with average standards.

(a) *Compliance with the sulfur average standard.* For each of their facilities, a gasoline manufacturer must demonstrate compliance with the sulfur average standard in § 1090.205(a) by using the equations in paragraphs (a)(1) and (2) of this section.

(1) *Compliance sulfur value calculation.* (i) The compliance sulfur value is determined as follows:

$$CSV_y = S_{tot,y} + Ds_{,(y-1)} + D_{S__Oxy__Total} - C_S$$

Where:

CSV_y = Compliance sulfur value for compliance period y, in ppm-gallons.

$S_{tot,y}$ = The total amount of sulfur produced in compliance period y, per paragraph (a)(1)(ii) of this section, in ppm-gallons.

$Ds_{,(y-1)}$ = Sulfur deficit from the previous compliance period, per § 1090.715(a)(1), in ppm-gallons.

$D_{S__Oxy__Total}$ = The total sulfur deficit from BOB recertification, per § 1090.740(b)(2), in ppm-gallons.

C_S = Sulfur credits used by the gasoline manufacturer, per § 1090.720, in ppm-gallons.

(ii) The total amount of sulfur produced is determined as follows:

$$S_{tot,y} = \sum_{i=1}^{n} (V_i \cdot S_i)$$

Where:

V_i = The volume of gasoline produced or imported in batch i, in gallons.

S_i = The sulfur content of batch i, in ppm.

n = The number of batches of gasoline produced or imported during the compliance period.

i = Individual batch of gasoline produced or imported during the compliance period.

If the calculation of $S_{tot,y}$ results in a negative number, replace it with zero.

(2) *Sulfur compliance calculation.* (i) Compliance with the sulfur average standard in § 1090.205(a) is achieved if the following equation is true:

$$CSV_y \leq \left(\sum_{i=1}^{n} V_i \cdot 10\right)$$

(ii) Compliance with the sulfur average standard in §1090.205(a) is not achieved if a deficit is incurred two or more consecutive years. A gasoline manufacturer incurs a deficit under §1090.715 if the following equation is true:

$$CSV_y > \left(\sum_{i=1}^{n} V_i \cdot 10\right)$$

(b) *Compliance with the benzene average standards.* For each of their facilities, a gasoline manufacturer must demonstrate compliance with the benzene average standard in §1090.210(a) by using the equations in paragraphs (b)(1) and (2) of this section and with the maximum benzene average standard in §1090.210(b) by using the equations in paragraphs (b)(3) and (4) of this section.

(1) *Compliance benzene value calculation.* (i) The compliance benzene value is determined as follows:

$$CBV_y = B_{tot,y} + D_{Bz,(y-1)} + D_{Bz__Oxy__Total} - C_{Bz}$$

Where:

CBV_y = Compliance benzene value for compliance period y, in benzene gallons.

$B_{tot,y}$ = The total amount of benzene produced in compliance period y, per paragraph (b)(1)(ii) of this section, in benzene gallons.

$D_{Bz,(y-1)}$ = Benzene deficit from the previous compliance period, per §1090.715(a)(2), in benzene gallons.

$D_{Bz__Oxy__Total}$ = The total benzene deficit from BOB recertification, per §1090.740(b)(4), in benzene gallons.

C_{Bz} = Benzene credits used by the gasoline manufacturer, per §1090.720, in benzene gallons.

(ii) The total amount of benzene produced is determined as follows:

$$B_{tot,y} = \sum_{i=1}^{n} \left(\frac{V_i \cdot B_i}{100}\right)$$

V_i = The volume of gasoline produced or imported in batch i, in gallons.

B_i = The benzene content of batch i, in volume percent.

n = The number of batches of gasoline produced or imported during the compliance period.

i = Individual batch of gasoline produced or imported during the compliance period.

If the calculation of $B_{tot,y}$ results in a negative number, replace it with zero.

(2) *Benzene average compliance calculation.* (i) Compliance with the benzene average standard in §1090.210(a) is achieved if the following equation is true:

$$CBV_y \leq \sum_{i=1}^{n} V_i \cdot 0.0062$$

(ii) Compliance with the benzene average standard in §1090.210(a) is not achieved if a deficit is incurred two or more consecutive years. A gasoline manufacturer incurs a deficit under §1090.715 if the following equation is true:

$$CBV_y > \sum_{i=1}^{n} V_i \cdot 0.0062$$

(3) *Average benzene concentration calculation.* The average benzene concentration is determined as follows:

$$B_{a,y} = \frac{\sum_{i=1}^{n}(V_i \cdot B_i)}{\sum_{i=1}^{n} V_i}$$

Where:

$B_{a,y}$ = Average benzene concentration for compliance period y, in volume percent benzene.

(4) *Maximum benzene average compliance calculation.* Compliance with the maximum benzene average standard in § 1090.210(b) is achieved for compliance period y if the following equation is true:

$B_{a,y} \leq 1.30$ vol%

(5) *Rounding and reporting benzene values.* (i) The total amount of benzene produced, as calculated in paragraph (b)(1)(ii) of this section, must be rounded to the nearest whole benzene gallon in accordance with § 1090.50.

(ii) The average benzene concentration, as calculated in paragraph (b)(3) of this section, must be rounded and reported to two decimal places in accordance with § 1090.50.

(c) *Accounting for oxygenate added at a downstream location.* A gasoline manufacturer that complies with the requirements in § 1090.710 may include the volume of oxygenate added at a downstream location and the effects of such blending on sulfur content and benzene content in compliance calculations under this subpart.

(d) *Inclusions.* A gasoline manufacturer must include the following products that they produced or imported during the compliance period in their compliance calculations:

(1) CG.

(2) RFG.

(3) BOB.

(4) Added gasoline volume resulting from the production of gasoline from PCG as follows:

(i) For PCG by subtraction under § 1090.1320(a)(1), include the PCG batch as a batch with a negative volume, positive sulfur content, and positive benzene content and include the new batch of gasoline as a batch with a positive volume, positive sulfur content, and positive benzene content in compliance calculations under this section. Any negative compliance sulfur value or compliance benzene value must be reported as zero and not as a negative result.

(ii) For PCG by addition under § 1090.1320(a)(2), include only the blendstock added to make the new batch of gasoline as a batch with a positive volume, positive sulfur content, and positive benzene content in compliance calculations under this section. Do not include any test results or volumes for the PCG or new batch of gasoline in these calculations.

(5)(i) Inclusion of a particular batch of gasoline for compliance calculations for a compliance period is based on the date the batch is produced, not shipped. For example, a batch produced on December 30, 2021, but shipped on January 2, 2022, would be included in the compliance calculations for the 2021 compliance period. The volume included in the 2021 compliance period for that batch would be the entire batch volume, even though the shipment of all or some of the batch did not occur until 2022.

(ii) For PCG by subtraction under § 1090.1320(a)(1), include PCG in the compliance period in which it was blended with blendstock. This may necessitate reporting a portion of the volume of PCG received in one compliance

period as a separate PCG batch in the following compliance period.

(e) *Exclusions.* A gasoline manufacturer must exclude the following products from their compliance calculations:

(1) Gasoline that was not produced by the gasoline manufacturer.

(2) Blendstock, unless the blendstock is added to PCG or TGP under §1090.1320 or §1090.1325, respectively.

(3) PCG, except as specified in paragraph (d)(4)(i) of this section.

(4) Certified butane and certified pentane blended under §1090.1320(b).

(5) TGP.

(6) GTAB that meets the requirements in §1090.1615(a).

(7) Gasoline imported by truck or rail using the provisions of §1090.1610 to meet the alternative per-gallon standards of §§1090.205(d) and 1090.210(c).

(8) Gasoline exempt under subpart G of this part from the average standards of subpart C of this part (*e.g.,* California gasoline, racing fuel, etc.).

§1090.705 Facility level compliance.

(a) Except as specified in paragraph (b) of this section, a gasoline manufacturer must comply with average standards at the individual facility level.

(b) A gasoline importer must comply with average standards at the company level, except that aggregation of all import facilities within a PADD as a single facility is required for compliance with the maximum benzene average standard in §1090.210(b).

§1090.710 Downstream oxygenate accounting.

The requirements of this section apply to BOB for which a gasoline manufacturer accounts for the effects of the oxygenate blending that occurs downstream of the fuel manufacturing facility in the gasoline manufacturer's average standard compliance calculations under this subpart. This section also includes requirements for oxygenate blenders to ensure that oxygenate is added in accordance with the blending instructions specified by the gasoline manufacturer in order to ensure fuel quality standards are met.

(a) *Provisions for gasoline manufacturers.* In order to account for the effects of oxygenate blending downstream, a gasoline manufacturer must meet all the following requirements:

(1) Produce or import BOB such that the gasoline continues to meet the applicable gasoline standards in subpart C of this part after the addition of the specified type and amount of oxygenate.

(2) For each batch of BOB produced or imported, create a hand blend in accordance with §1090.1340 and determine the properties of the hand blend using the methods specified in subpart N of this part.

(3) Participate in the NSTOP specified in §1090.1450 or have an approved in-line blending waiver under §1090.1315.

(4) Transfer ownership of the BOB only to an oxygenate blender that is registered with EPA under subpart I of this part or to an intermediate owner with the restriction that it only be transferred to a registered oxygenate blender.

(5) Specify on the PTD for the BOB each oxygenate type and amount (or range of amounts) for which the hand blend was certified for compliance under §1090.1340.

(6) Participate in the NFSP under subpart O of this part.

(b) *Requirements for oxygenate blenders.* An oxygenate blender must add oxygenate of each type and amount (or within the range of amounts) as specified on the PTD for all BOB received, except as specified in paragraph (c)(2) of this section.

(c) *Limitations.* (1) Only the gasoline manufacturer that first certifies the BOB may account for the downstream addition of oxygenate under this section. On any occasion where any person downstream of the fuel manufacturing facility gate of the gasoline manufacturer that produced or imported gasoline or BOB adds oxygenate to such product, the person must not include the volume, sulfur content, and benzene content of the oxygenate in any compliance calculations for demonstrating compliance with the average standards specified in subpart C of this part or for credit generation under this subpart. All applicable per-gallon standards specified in subpart C of this part continue to apply.

(2) A person downstream of the fuel manufacturing facility gate may recertify BOB for use as gasoline without the addition of the specified type and amount of oxygenate if the provisions of § 1090.740 are met. A person who recertifies BOB for use as gasoline without the addition of the specified type and amount of oxygenate is a gasoline manufacturer and must meet all applicable requirements for a gasoline manufacturer specified in this part.

§ 1090.715 Deficit carryforward.

(a) A gasoline manufacturer incurs a compliance deficit if they exceed the average standard specified in subpart C of this part for a given compliance period. The deficit incurred must be determined as specified in paragraph (a)(1) of this section for sulfur and paragraph (a)(2) of this section for benzene.

(1) The sulfur deficit incurred is determined as follows:

$$D_{S,y} = CSV_y - \left(\sum_{i=1}^{n} V_i \cdot 10\right)$$

Where:

$D_{S,y}$ = Sulfur deficit incurred for compliance period y, in ppm-gallons.

CSV_y = Compliance sulfur value for compliance period y, per § 1090.700(a)(1), in ppm-gallons.

V_i = The volume of gasoline produced or imported in batch i, in gallons.

n = The number of batches of gasoline produced or imported during the compliance period.

i = Individual batch of gasoline produced or imported during the compliance period.

(2) The benzene deficit incurred is determined as follows:

$$D_{Bz,y} = CBV_y - \left(\sum_{i=1}^{n} V_i \cdot 0.0062\right)$$

Where:

$D_{Bz,y}$ = Benzene deficit incurred for compliance period y, in benzene gallons.

CBV_y = Compliance benzene value for compliance period y, per § 1090.700(b)(1)(i), in ppm-gallons.

V_i = The volume of gasoline produced or imported in batch i, in gallons.

n = The number of batches of gasoline produced or imported during the compliance period.

i = Individual batch of gasoline produced or imported during the compliance period.

(b) A gasoline manufacturer must use all sulfur or benzene credits previously generated or obtained at any of their facilities to achieve compliance with an average standard specified in subpart C of this part before carrying forward a sulfur or benzene deficit at any of their facilities.

(c) A gasoline manufacturer that incurs a deficit under this section must satisfy that deficit and demonstrate compliance with the annual average standards during the next compliance period regardless of whether the gasoline manufacturer produces gasoline during next compliance period.

§ 1090.720 Credit use.

(a) *General credit use provisions.* Only a gasoline manufacturer may generate, use, transfer, or own credits generated under this subpart, as specified in § 1090.725(a)(1). Credits may be used by a gasoline manufacturer to comply with the average standards specified in subpart C of this part. A gasoline manufacturer may also bank credits for future use, transfer credits to another facility within the company (*i.e.*, intracompany trading), or transfer credits to another gasoline manufacturer, if all applicable requirements of this subpart are met.

(b) *Credit life.* Credits are valid for use for 5 years after the compliance period for which they are generated.

(c) *Limitations on credit use.* (1) Credits that have expired must not be used for demonstrating compliance with the average standards specified in subpart C of this part or be used to replace invalid credits under § 1090.735.

(2) A gasoline manufacturer possessing credits must use all credits prior to incurring a compliance deficit under § 1090.715.

(3) Credits must not be used to meet per-gallon standards.

(4) Credits must not be used to meet the maximum benzene average standard in § 1090.210(b).

(5) Credits may only be used if the gasoline manufacturer owns them at the time of use.

(d) *Credit reporting.* A gasoline manufacturer that generates, transacts, or uses credits under this subpart must report to EPA as specified in § 1090.905 using forms and procedures specified by EPA.

(e) *Part 80 credit use.* Valid credits generated under 40 CFR 80.1615 and 80.1290 may be used by a gasoline manufacturer to comply with the average standards in subpart C of this part, subject to the provisions of this subpart.

§ 1090.725 Credit generation.

(a) *Parties that may generate credits.* (1) No person other than a gasoline manufacturer may generate credits for use towards an average standard specified in subpart C of this part.

(2) No credits may be generated for gasoline produced by any of the following activities:

(i) Transmix processing.

(ii) Transmix blending.

(iii) Oxygenate blending.

(iv) Certified butane blending.

(v) Certified pentane blending.

(vi) Importation of gasoline by rail and truck using the alternative sampling and testing requirements in § 1090.1610.

(3) No sulfur credits may be generated at a facility if that facility used sulfur credits in that same compliance period.

(4) No benzene credits may be generated at a facility if that facility used benzene credits in that same compliance period.

(b) *Credit year.* Credits generated under this section must be identified by the compliance period of generation. For example, credits generated on gasoline produced in 2021 must be identified as 2021 credits.

(c) *Sulfur credit generation.* (1) The number of sulfur credits generated is determined as follows:

$$C_{S,y} = \left(\sum_{i=1}^{n} V_i \cdot 10\right) - CSV_y$$

Where:

$C_{S,y}$ = Sulfur credits generated for compliance period y, in ppm-gallons.

V_i = The volume of gasoline produced or imported in batch i, in gallons.

n = The number of batches of gasoline produced or imported during the compliance period.

i = Individual batch of gasoline produced or imported during the compliance period.

CSV_y = Compliance sulfur value for compliance period y, per § 1090.700(a)(1), in ppm-gallons.

(2) The value of $C_{S,y}$ must be positive to generate credits.

(3) Sulfur credits calculated under paragraph (c)(1) of this section must be expressed to the nearest ppm-gallon. Fractional values must be rounded in accordance with § 1090.50.

(d) *Benzene credit generation.* (1) The number of benzene credits generated is determined as follows:

$$C_{Bz,y} = \left(\sum_{i=1}^{n} V_i \cdot 0.0062\right) - CBV_y$$

Where:

$C_{Bz,y}$ = Benzene credits generated for compliance period y, in benzene gallons.

V_i = The volume of gasoline produced or imported in batch i, in gallons.

n = The number of batches of gasoline produced or imported during the compliance period.

i = Individual batch of gasoline produced or imported during the compliance period.

CBV_y = Compliance benzene value for compliance period y, per §1090.700(b)(1)(i), in benzene gallons.

(2) The value of $C_{Bz,y}$ must be positive to generate credits.

(3) Benzene credits calculated under paragraph (d)(1) of this section must be expressed to the nearest benzene gallon. Fractional values must be rounded in accordance with §1090.50.

(e) *Credit generation limitation.* A gasoline manufacturer may only generate credits after they have finished producing or importing gasoline for the compliance period.

(f) *Credit generation reporting.* A gasoline manufacturer that generates credits under this section must report to EPA all credit generation information as specified in §1090.905 using forms and procedures specified by EPA.

§1090.730 Credit transfers.

A gasoline manufacturer may only transfer or obtain credits from another gasoline manufacturer to meet an average standard specified in subpart C of this part if all applicable requirements of this section are met.

(a) The credits are generated as specified in §1090.725 and reported as specified in §1090.905.

(b) The credits are used for compliance in accordance with the limitations on credit use specified in §1090.720(c).

(c) Any credit transfer must take place no later than the deadline specified in §1090.900(c) following the compliance period in which the credits are obtained.

(d) The credit has not been transferred between EPA registered companies more than twice. The first transfer by the gasoline manufacturer that generated the credit (''transferor'') must only be made to a gasoline manufacturer that intends to use the credit (''transferee''). If the transferee is unable to use the credit, it may make the second, and final, transfer only to a gasoline manufacturer that intends to use the credit. Intracompany credit transfers are unlimited.

(e) The transferor must apply any credits necessary to meet the transferor's applicable average standard before transferring credits to any other gasoline manufacturer.

(f) No person may transfer credits if the transfer would cause them to incur a deficit.

(g) Unless the transferor and transferee are the same party (*i.e.*, intracompany transfers), the transferor must supply to the transferee records as specified in §1090.1210(g) indicating the year(s) the credits were generated, the identity of the gasoline manufacturer that generated the credits, and the identity of the transferring party.

(h) The transferor and the transferee must report to EPA all information regarding the transaction as specified in §1090.905 using forms and procedures specified by EPA.

§1090.735 Invalid credits and remedial actions.

For credits that have been calculated or generated improperly, or are otherwise determined to be invalid, all the following provisions apply:

(a) Invalid credits must not be used to achieve compliance with an average standard under this part, regardless of the good faith belief that the credits were validly generated.

(b) Any validly generated credits existing in the transferring gasoline manufacturer's credit balance after correcting the credit balance, and after the transferor applies credits as needed to meet the average standard at the end of the compliance period, must first be applied to correct the invalid

transfers before the transferring gasoline manufacturer trades or banks the credits.

(c) The gasoline manufacturer that used the credits, and any transferor of the credits, must adjust their credit records, reports, and average standard compliance calculations as necessary to reflect the use of valid credits only. Updates to any reports must be done in accordance with subpart J of this part using forms and procedures specified by EPA.

§ 1090.740 Downstream BOB recertification.

(a)(1) A gasoline manufacturer may recertify a BOB that another gasoline manufacturer has specified blending instructions for oxygenate(s) under § 1090.710(a)(5) for a different type or amount of oxygenate, including gasoline recertification to contain no oxygenate, if the recertifying gasoline manufacturer meets all the requirements of this section.

(2) A gasoline manufacturer must comply with applicable requirements of this part and incur deficits to be included in their compliance calculations in § 1090.700 for each facility at which the gasoline manufacturer recertifies BOB.

(3) Unless otherwise required under this part, a gasoline manufacturer that recertifies 1,000,000 or less gallons of BOB under this section at a facility does not need to obtain credits to satisfy deficits incurred under this section or arrange for an auditor to conduct audits under subpart S of this part for that facility. The gasoline manufacturer must still comply with all other applicable provisions of this part (*e.g.*, register and submit reports under subparts I and J of this part, respectively).

(4) A party that only recertifies BOB that contains a greater amount of a specified oxygenate (*e.g.*, a party adds 15 volume percent DFE instead of 10 volume percent to an E10 BOB) or a different oxygenate at an equal or greater amount (*e.g.*, a party adds 16 volume percent isobutanol instead of 10 volume percent to an E10 BOB) does not incur deficits under this section, does not need to submit reports under subpart J of this part, and does not need to arrange for an auditor to conduct an audit under subpart S of this part. The party must still comply with all other applicable provisions of this part (*e.g.*, register and keep records under subparts I and M of this part, respectively).

(b) A gasoline manufacturer that recertifies a BOB under this section must calculate sulfur and benzene deficits for each batch and the total deficits for sulfur and benzene as follows:

(1) *Sulfur deficits from downstream BOB recertification.* Calculate the sulfur deficit from BOB recertification for each individual batch of BOB recertified as follows:

$$D_{S_Oxy_Batch} = 11\text{ppm} \cdot V_{Base} \cdot \left[\frac{1}{\left(1 - (PTD_{Oxy} - ACTUAL_{Oxy})\right)} - 1\right]$$

Where:

$D_{S_Oxy_Batch}$ = Sulfur deficit resulting from recertifying the batch of BOB, in ppm-gallons.

V_{Base} = The volume of BOB in the batch being recertified, in gallons.

PTD_{Oxy} = The volume fraction of oxygenate that would have been added to the BOB as specified on PTDs.

$ACTUAL_{Oxy}$ = The volume fraction of oxygenate that was actually added to the BOB. If no oxygenate was added to the BOB, then $ACTUAL_{Oxy} = 0$.

(2) *Total sulfur deficit from downstream BOB recertification.* Calculate the total sulfur deficit from downstream BOB recertification for each facility as follows:

$$D_{S_Oxy_Total,y} = \sum_{i=1}^{n} D_{S_Oxy_Batch_i}$$

Where:

$D_{S_Oxy_Total,y}$ = The total sulfur deficit from downstream BOB recertification for compliance period y, in ppm-gallons.

$D_{S_Oxy_Batch_i}$ = The sulfur deficit for batch i of recertified BOB, per paragraph (b)(1) of this section, in ppm-gallons.

n = The number of batches of BOB recertified during compliance period y.

i = Individual batch of BOB recertified during compliance period y.

(3) *Benzene deficits from downstream BOB recertification.* Calculate the benzene deficit from BOB recertification for each individual batch of BOB recertified as follows:

$$D_{Bz_Oxy_Batch} = 0.0068 \cdot V_{Base} \cdot \left[\frac{1}{\left(1 - (PTD_{Oxy} - ACTUAL_{Oxy})\right)} - 1\right]$$

Where:

$D_{Bz_Oxy_Batch}$ = Benzene deficit resulting from recertifying the batch of BOB, in benzene gallons.

V_{Base} = The volume of BOB in the batch being recertified, in gallons.

PTD_{Oxy} = The volume fraction of oxygenate that would have been added to the BOB as specified on PTDs.

$ACTUAL_{Oxy}$ = The volume fraction of oxygenate that was actually added to the BOB. If no oxygenate was added to the BOB, then $ACTUAL_{Oxy} = 0$.

(4) *Total benzene deficit from downstream BOB recertification.* Calculate the total benzene deficit from downstream BOB recertification for each facility as follows:

$$D_{Bz_Oxy_Total,y} = \sum_{i=1}^{n} D_{Bz_Oxy_Batch_i}$$

Where:

$D_{Bz_Oxy_Total,y}$ = The total benzene deficit from downstream BOB recertification for compliance period y, in benzene gallons.

$D_{Bz_Oxy_Batch_i}$ = The benzene deficit for batch i of recertified BOB, per paragraph (b)(3) of this section, in benzene gallons.

n = The number of batches of BOB recertified during compliance period y.

i = Individual batch of BOB recertified during compliance period y.

(5) *Deficit rounding.* The deficits calculated in paragraphs (b)(1) through (4) of this section must be rounded and reported to the nearest sulfur ppm-gallon or benzene gallon in accordance with § 1090.50, as applicable.

(c) A gasoline manufacturer does not incur a deficit, nor may they generate credits, for negative values from the equations in paragraph (b) of this section.

(d) Deficits incurred under this section must be fulfilled in the compliance period in which they occur and must not be carried forward under § 1090.715.

§ 1090.745 Informational annual average calculations.

(a) A gasoline manufacturer must calculate and report annual average sulfur and benzene concentrations for each of their facilities as specified in this section. The values calculated and reported under this section are not used to demonstrate compliance with average standards under this part.

(b) A gasoline manufacturer must calculate and report their unadjusted

average sulfur concentration as follows:

$$S_{a,y} = \frac{\sum_{i=1}^{n}(V_i \cdot S_i)}{\sum_{i=1}^{n} V_i}$$

Where:

$S_{a,y}$ = The facility unadjusted average sulfur concentration for compliance period y, in ppm. Round and report $S_{a,y}$ to two decimal places.

V_i = The volume of gasoline produced or imported in batch i, in gallons.

S_i = The sulfur content of batch i, in ppm.

n = The number of batches of gasoline produced or imported during the compliance period.

i = Individual batch of gasoline produced or imported during the compliance period.

(c) A gasoline manufacturer must calculate and report their net average sulfur concentration as follows:

$$S_{NET,y} = \frac{CSV_y}{\sum_{i=1}^{n} V_i}$$

Where:

$S_{NET,y}$ = The facility net average sulfur concentration for compliance period y, in ppm. Round and report $S_{NET,y}$ to two decimal places.

CSV_y = Compliance sulfur value for compliance period y, per §1090.700(a)(1), in ppm-gallons.

(d) A gasoline manufacturer must calculate and report their net average benzene concentration as follows:

$$B_{NET,y} = \frac{CBV_y}{\sum_{i=1}^{n} V_i}$$

Where:

$B_{NET,y}$ = The facility net average benzene concentration for compliance period y, in volume percent benzene. Round and report $B_{NET,y}$ to two decimal places.

CBV_y = Compliance benzene value for compliance period y, per §1090.700(b)(1)(i), in benzene gallons.

Subpart I—Registration

§ 1090.800 General provisions.

(a) *Who must register*. The following parties must register with EPA prior to engaging in any activity under this part:

(1) Fuel manufacturers, including:

(i) Gasoline manufacturers.

(ii) Diesel fuel manufacturers.

(iii) ECA marine fuel manufacturers.

(iv) Certified butane blenders.

(v) Certified pentane blenders.

(vi) Transmix processors.

(2) Oxygenate blenders.

(3) Oxygenate producers, including DFE producers.

(4) Certified pentane producers.

(5) Certified ethanol denaturant producers.

(6) Distributors, carriers, and pipeline operators that are part of the 500 ppm LM fuel distribution chain under a compliance plan submitted under §1090.515(g).

(7) Independent surveyors.

(8) Auditors.

(9) Third parties that submit reports on behalf of any regulated party under this part. Such parties must register and associate their registration with

the regulated party for whom they are reporting.

(b) *Dates for registration*. The deadlines for registration are as follows:

(1) *New registrants*. Except as specified in paragraph (b)(2) of this section, a party not currently registered with EPA must register with EPA no later than 60 days in advance of the first date that such party engages in any activity under this part requiring registration under paragraph (a) of this section.

(2) *Existing registrants*. Any party that is already registered with EPA under 40 CFR part 80 as of January 1, 2021, is deemed to be registered for purposes of this part, except that such party is responsible for reviewing and updating their registration information consistent with the requirements of this part, as specified in paragraph (c) of this section.

(c) *Updates to registration*. A registered party must submit updated registration information to EPA within 30 days of any occasion when the registration information previously supplied becomes incomplete or inaccurate.

(d) *RCO submission*. Registration information must be submitted by an RCO. The RCO may delegate responsibility to a person who is familiar with the requirements of this part and who is no lower in the organization than a fuel manufacturing facility manager, or equivalent.

(e) *Forms and procedures for registration*. All registrants must use forms and procedures specified by EPA.

(f) *Company and facility identification*. EPA will provide registrants with company and facility identifiers to be used for recordkeeping and reporting under this part.

(g) *English language*. Registration information submitted to EPA must be in English.

§ 1090.805 Contents of registration.

(a) *General information required for all registrants*. A party required to register under this part must submit all the following general information to EPA:

(1) *Company information*. For the company of the party, all the following information:

(i) The company name.

(ii) Company address, which must be the physical address of the business (*i.e.*, not a post office box).

(iii) Mailing address, if different from company address.

(iv) Name, title, telephone number, and email address of an RCO.

(2) *Facility information*. For each separate facility, all the following information:

(i) The facility name.

(ii) The physical location of the facility.

(iii) A contact name, email address, and telephone number for the facility.

(iv) The type of facility.

(3) *Location of records*. For each separate facility, or for each importer's operations in a single PADD, all the following information:

(i) Whether records are kept on-site or off-site of the facility, or for an importer, the registered address.

(ii) If records are kept off-site, the primary off-site storage name, physical location, contact name, and telephone number.

(4) *Activities*. A description of the activities that are engaged in by the company and its facilities (*e.g.*, refining, importing, etc.).

(b) *Additional information required for certified pentane producers*. In addition to the information in paragraph (a) of this section, a certified pentane producer must also submit the following information:

(1) A description of the production facility that demonstrates that the facility is capable of producing certified pentane that is compliant with the requirements of this part without significant modifications to the existing facility.

(2) A description of how certified pentane will be shipped from the production facility to the certified pentane blender(s) and the associated quality assurance practices that demonstrate that contamination during distribution can be adequately controlled so as not to cause certified pentane to be in violation of the standards in this part.

§ 1090.810 Voluntary cancellation of company or facility registration.

(a) *Criteria for voluntary cancellation*. A party may request cancellation of the registration of the company or any

of its facilities at any time. Such request must use forms and procedures specified by EPA.

(b) *Effect of voluntary cancellation.* A party whose registration is canceled:

(1) Will still be liable for violation of any requirements under this part.

(2) Will not be listed on any public list of actively registered companies that is maintained by EPA.

(3) Will not have access to any of the electronic reporting systems associated with this part.

(4) Will still be required to meet any applicable requirements under this part (*e.g.*, the recordkeeping provisions under subpart M of this part).

(c) *Re-registration.* If a party whose registration has been voluntarily cancelled wants to re-register, they must do all the following:

(1) Notify EPA of their intent to re-register.

(2) Provide any required information and correct any identified deficiencies.

(3) Refrain from initiating a new registration unless directed to do so by EPA.

(4) Submit updated information as needed.

§ 1090.815 Deactivation (involuntary cancellation) of registration.

(a) *Criteria for deactivation.* EPA may deactivate the registration of any party, or any of a party's facilities, required to register under this part, using the process specified in paragraph (b) of this section, if any of the following criteria are met:

(1) The party has not accessed their account or engaged in any registration or reporting activity within the most recent 24 months.

(2) The party has failed to comply with the registration requirements of this subpart.

(3) The party has failed to submit any required notification or report within 30 days of the required submission date.

(4) Any required attest engagement has not been received within 30 days of the required submission date.

(5) The party fails to pay a penalty or to perform any requirement under the terms of a court order, administrative order, consent decree, or administrative settlement between the party and EPA.

(6) The party submits false or incomplete information.

(7) The party denies EPA access or prevents EPA from completing authorized activities under section 114 or 208 of the Clean Air Act (42 U.S.C. 7414 or 7542) despite presenting a warrant or court order. This includes a failure to provide reasonable assistance.

(8) The party fails to keep or provide the records required under subpart M of this part.

(9) The party otherwise circumvents the intent of the Clean Air Act or of this part.

(b) *Process for deactivation.* Except as specified in paragraph (c) of this section, EPA will use the following process whenever it decides to deactivate the registration of a party:

(1) EPA will provide written notification to the RCO identifying the reasons or deficiencies for which EPA intends to deactivate the party's registration. The party will have 30 calendar days from the date of the notification to correct the deficiencies identified or explain why there is no need for corrective action.

(2) If the basis for EPA's notice of intent to deactivate registration is the absence of activity under paragraph (a)(1) of this section, a stated intent to engage in activity will be sufficient to avoid deactivation of registration.

(3) If the party does not correct identified deficiencies under paragraphs (a)(2) through (9) of this section, EPA may deactivate the party's registration without further notice to the party.

(c) *Immediate deactivation.* In instances in which public health, public interest, or safety requires, EPA may deactivate the registration of the party without any notice to the party. EPA will provide written notification to the RCO identifying the reason(s) EPA deactivated the registration of the party.

(d) *Effect of deactivation.* A party whose registration is deactivated:

(1) Will still be liable for violation of any requirement under this part.

(2) Will not be listed on any public list of actively registered companies that is maintained by EPA.

(3) Will not have access to any of the electronic reporting systems associated with this part.

(4) Will still be required to meet any applicable requirements under this part (*e.g.*, the recordkeeping provisions under subpart M of this part).

(e) *Re-registration*. If a party whose registration has been deactivated wishes to re-register, they must do all the following:

(1) Notify EPA of their intent to re-register.

(2) Provide any required information and correct any identified deficiencies.

(3) Refrain from initiating a new registration unless directed to do so by EPA.

(4) Remedy the circumstances that caused the party to be deactivated in the first place.

(5) Submit updated information as needed.

§ 1090.820 Changes of ownership.

(a) When a company or any of its facilities will change ownership, the company must notify EPA within 30 days after the date of the change in ownership.

(b) The notification required under paragraph (a) of this section must include all the following:

(1) The effective date of the transfer of ownership of the company or facility and a summary of any changes to the registration information for the affected companies and facilities.

(2) Documents that demonstrate the sale or change in ownership of the company or facility.

(3) A letter, signed by an RCO from the company that currently owns or will own the company or facility and, if possible, an RCO from the company that previously registered the company or facility that details the effective date of the transfer of ownership of the company or facility and summarizes any changes to the registration information.

(4) Any additional information requested by EPA to complete the change in registration.

Subpart J—Reporting

§ 1090.900 General provisions.

(a) *Forms and procedures for reporting*. (1) All reporting, including all transacting of credits under this part, must be submitted electronically using forms and procedures specified by EPA.

(2) Values must be reported in the units (*e.g.*, gallons, ppm, etc.) and to the number of decimal places specified in this part or in reporting formats and procedures, whichever is more precise.

(3) Reported volumes must be temperature-corrected in accordance with § 1090.1350(d).

(4) Report values as specified in § 1090.1335(e).

(b) *English language*. All reports submitted under this subpart must be submitted in English.

(c) *Report deadlines*. All annual, batch, and credit transaction reports required under this subpart, except attest engagement reports, must be submitted by March 31 for the preceding compliance period (*e.g.*, reports covering the calendar year 2021 must be submitted to EPA by no later than March 31, 2022). Attest engagement reports must be submitted by June 1 for the preceding compliance period (*e.g.*, attest engagement reports covering calendar year 2021 must be submitted to EPA by no later than June 1, 2022). Independent survey quarterly reports must be submitted by the deadlines in Table 1 to paragraph (a)(4) in § 1090.925.

(d) *RCO submission*. Reports must be signed and submitted by an RCO or their delegate of the RCO.

§ 1090.905 Annual, batch, and credit transaction reporting for gasoline manufacturers.

(a) *Annual compliance demonstration for sulfur*. For each compliance period, a gasoline manufacturer must submit a report for each of their facilities that includes all the following information:

(1) *Company-level reporting*. For the company, as applicable:

(i) The EPA-issued company and facility identifiers.

(ii) Provide information for sulfur credits, and separately by compliance period of creation, as follows:

(A) The number of sulfur credits owned at the beginning of the compliance period.

(B) The number of sulfur credits that expired at the end of the compliance period.

(C) The number of sulfur credits that will be carried over into the next compliance period.

(D) Any other information as EPA may require in order to administer reporting systems.

(2) *Facility-level reporting*. For each refinery or importer, as applicable:

(i) The EPA-issued company and facility identifiers.

(ii) The compliance sulfur value, per §1090.700(a)(1), in ppm-gallons.

(iii) The total volume of gasoline produced or imported, in gallons.

(iv) Provide information for sulfur credits, and separately by compliance period of creation, as follows:

(A) The number of sulfur credits generated during the compliance period.

(B) The number of sulfur credits retired during the compliance period.

(C) The sulfur credit deficit that was carried over from the previous compliance period.

(D) The sulfur credit deficit that will be carried over into the next compliance period.

(E) The total sulfur deficit from downstream BOB recertification, per §1090.740(b)(2).

(v) The unadjusted average sulfur concentration, per §1090.745(b), in ppm.

(vi) The net average sulfur concentration, per §1090.745(c), in ppm.

(vii) Any other information as EPA may require in order to administer reporting systems.

(b) *Annual compliance demonstration for benzene*. For each compliance period, a gasoline manufacturer must submit a report for each of their facilities that includes all the following information:

(1) *Company-level reporting*. For the company, as applicable:

(i) The EPA-issued company and facility identifiers and compliance level.

(ii) Provide information for benzene credits, and separately by compliance period of creation, as follows:

(A) The number of benzene credits owned at the beginning of the compliance period.

(B) The number of benzene credits that expired at the end of the compliance period.

(C) The number of benzene credits that will be carried over into the next compliance period.

(D) Any other information as EPA may require in order to administer reporting systems.

(2) *Facility-level reporting*. For each fuel manufacturing facility or importer, as applicable:

(i) The EPA-issued company and facility identifiers.

(ii) The compliance benzene value, per §1090.700(b)(1)(i), in benzene gallons.

(iii) The total volume of gasoline produced or imported, in gallons.

(iv) The average benzene concentration, per §1090.700(b)(3), in percent volume. For an importer, report the average benzene concentration for each aggregated import facility.

(v) The net average benzene concentration, per §1090.745(d), in percent volume.

(vi) Provide information for benzene credits, and separately by compliance period of creation, as follows:

(A) The number of benzene credits generated during the compliance period.

(B) The number of benzene credits retired during the compliance period.

(C) The benzene credit deficit that was carried over from the previous compliance period

(D) The benzene credit deficit that will be carried over into the next compliance period.

(E) The total benzene deficit from downstream BOB recertification, per §1090.740(b)(4).

(vii) Any other information as EPA may require in order to administer reporting systems.

(c) *Batch reporting*. A gasoline manufacturer must report the following information for each of their facilities on a per-batch basis for gasoline and gasoline regulated blendstocks:

(1) For all gasoline for which the gasoline manufacturer has not accounted for oxygenate added downstream under §1090.710:

(i) The EPA-issued company and facility identifiers.

(ii) The batch number.

(iii) The date the batch was produced or imported.

(iv) The batch volume, in gallons.

(v) The designation of the gasoline as RFG, CG, RFG ''Intended for Oxygenate Blending'', or CG ''Intended for Oxygenate Blending''.

(vi) The tested sulfur content of the batch separately for per-gallon and average compliance, in ppm, and the test method used to measure the sulfur content.

(vii) The tested benzene content of the batch, as a volume percentage, and the test method used to measure the benzene content.

(viii) For all batches of summer gasoline:

(A) The applicable RVP standard, as specified in § 1090.215.

(B) The tested RVP of the batch, in psi, and the test method used to measure the RVP. If the gasoline is Summer RFG that is designated as ''Intended for Oxygenate Blending'' under § 1090.1010(a)(4), report the tested RVP for the hand blend.

(ix) If the gasoline contains oxygenate, the type and tested content of each oxygenate, as a volume percentage, and the test method used to measure the content of each oxygenate.

(2) For BOB for which the gasoline manufacturer has accounted for oxygenate added downstream under § 1090.710:

(i) The EPA-issued company and facility identifiers.

(ii) The batch identification.

(iii) The date the batch of BOB was produced or imported.

(iv) The batch volume, in gallons. This volume is the sum of the produced or imported BOB volume plus the anticipated volume from the addition of oxygenate downstream that the gasoline manufacturer specified to be blended with the BOB.

(v) The designation of the BOB (CBOB or RBOB) used to prepare the hand blend of BOB and oxygenate under § 1090.1340.

(vi) The tested sulfur content for both the BOB and the hand blend of BOB and oxygenate prepared under § 1090.1340, and the test method used to measure the sulfur content.

(vii) The tested benzene content for the hand blend of BOB and oxygenate prepared under § 1090.1340, and the test method used to measure the benzene content.

(viii) For all batches of summer BOB:

(A) The applicable RVP standard, as specified in § 1090.215, for the neat CBOB, or hand blend of RBOB and oxygenate prepared under § 1090.1340.

(B) The tested RVP for the neat CBOB or hand blend of RBOB and oxygenate prepared under § 1090.1340, in psi, and the test method used to measure the RVP.

(ix) The type and content of each oxygenate, as a volume percentage, in the hand blend of BOB and oxygenate prepared under § 1090.1340, and, if measured, the test method used for each oxygenate.

(3) For blendstock added to PCG by a gasoline manufacturer complying by subtraction under § 1090.1320(a)(1):

(i) For the PCG prior to the addition of blendstock:

(A) The EPA-issued company and facility identifiers for the facility at which the PCG is blended to produce a new batch.

(B) The batch number assigned by the facility at which the PCG is blended to produce a new batch.

(C) The date the batch was received or, for PCG that was not received from another company, the date the PCG was designated to be used to produce a new batch of gasoline.

(D) The batch volume, including the volume of any oxygenate that would have been added to the PCG, as a negative number in gallons.

(E) The designation of the PCG.

(F) The tested sulfur content of the batch, in ppm, and the test method used to measure the sulfur content. If the PCG is a BOB, report the tested sulfur content of the hand blend prepared under § 1090.1340.

(G) The tested benzene content of the batch, as a volume percentage, and the test method used to measure the benzene content. If the PCG is a BOB, report the tested benzene content of the hand blend prepared under § 1090.1340.

(H) For all batches of summer gasoline or BOB:

(*1*) The applicable RVP standard, as specified in § 1090.215.

(*2*) The tested RVP of the batch, in psi, and the test method used to measure the RVP.

(I) If the PCG contains oxygenate, the type and tested content of each oxygenate, as a volume percentage, and the test method used to measure the content of each oxygenate.

(J) Identification of the batch as PCG.

(ii) For the batch of gasoline or BOB produced using PCG and blendstock:

(A) For batches of finished gasoline or neat BOB, all the information specified in paragraph (c)(1) of this section.

(B) For batches of BOB in which the oxygenate to be blended with the BOB is included in the gasoline manufacturer's compliance calculations, all the information specified in paragraph (c)(2) of this section.

(4) For blendstock(s) added to PCG by a gasoline manufacturer complying by addition under §1090.1320(a)(2), report each blendstock as a separate batch and all the following:

(i) For the blendstock, the sulfur content and benzene content of the batch.

(ii) For batches produced by adding blendstock to PCG, the sulfur content, oxygenate type and amount (unless not required under §1090.1310(e)), and for summer gasoline, RVP, of the batch.

(5) For certified butane blended by a certified butane blender or certified pentane blended by a certified pentane blender:

(i) For the certified butane or certified pentane batch:

(A) The batch number.

(B) The date the batch was received by the blender.

(C) The volume of certified butane or certified pentane blended, in gallons.

(D) The designation of the batch (certified butane or certified pentane).

(E) The volume percentage of butane in butane batches, or pentane in pentane batches, provided by the certified butane or certified pentane supplier.

(F) The sulfur content of the batch, in ppm, provided by the certified butane or certified pentane supplier.

(G) The benzene content of the batch, in volume percent, provided by the certified butane or certified pentane supplier.

(ii) For the batch of blended product (*i.e.*, PCG plus butane or PCG plus pentane):

(A) The batch number.

(B) The date the batch was produced.

(C) The batch volume, in gallons.

(D) The designation of the blended product.

(E) For a new batch of gasoline (*e.g.*, a blended gasoline containing certified butane and PCG) that is summer gasoline or summer BOB, the tested RVP of the batch, in psi, and the test method used to measure the RVP.

(6) For gasoline produced by adding any blendstocks to TGP:

(i) For each batch of gasoline produced with TGP, the sulfur content and for summer gasoline, RVP, of the batch.

(ii) For blendstocks added to TGP, a transmix processor or blending manufacturer must treat the TGP like PCG and report one of the following:

(A) The information specified in paragraph (c)(3) of this section.

(B) The information specified in paragraph (c)(4) of this section.

(7) For GTAB:

(i) The EPA-issued company and facility identifiers.

(ii) The batch number.

(iii) The date the batch was imported.

(iv) The batch volume, in gallons.

(v) The designation of the product as GTAB.

(8) For each batch of gasoline produced by a transmix processor or blending manufacturer from only TGP or both TGP and PCG under §1090.505:

(i) The EPA-issued company and facility identifiers.

(ii) The batch number.

(iii) The date the batch was produced.

(iv) The batch volume, in gallons.

(v) The designation of the gasoline.

(vi) The tested sulfur content of the batch, in ppm, and the test method used to measure the sulfur content.

(vii) For summer gasoline:

(A) The applicable RVP standard in §1090.215.

(B) The tested RVP of the batch, in psi, and the test method used to measure the RVP.

(9) Any other information as EPA may require in order to administer reporting systems.

(d) *Credit transactions.* Any party that is required to demonstrate annual compliance under paragraph (a) or (b) of this section must submit information related to individual transactions involving sulfur and benzene credits, including all the following:

(1) The generation, purchase, sale, or retirement of such credits.

(2) If any credits were obtained from or transferred to other fuel manufacturers, and for each other party, their name and EPA-issued company identifier, the number of credits obtained from or transferred to the other party, and the year the credits were generated.

(3) Any other information as EPA may require in order to administer reporting systems.

§ 1090.910 Reporting for gasoline manufacturers that recertify BOB to gasoline.

A party that recertifies BOB under § 1090.740 must report the information of this section, as applicable.

(a) *Batch reporting.* (1) A party that recertifies a BOB under § 1090.740 with less oxygenate than specified by the BOB manufacturer must report the following for each batch:

(i) The EPA-issued company and facility identifiers for the recertifying party.

(ii) The batch number assigned by the recertifying party.

(iii) The date the batch was recertified.

(iv) The batch volume, as a negative number in gallons. The volume is the amount of oxygenate that the recertifying gasoline manufacturer did not blend with the BOB.

(v) The designation of the batch.

(vi) A sulfur content of 11 ppm.

(vii) A benzene content of 0.68 volume percent.

(viii) The type and content of each oxygenate, as a volume percentage.

(ix) The sulfur deficit for the batch calculated under § 1090.740(b)(1).

(x) The benzene deficit for the batch calculated under § 1090.740(b)(3).

(2) A party that recertifies a BOB under § 1090.740 with more oxygenate than specified by the BOB manufacturer does not need to report the batch.

(b) *Annual sulfur and benzene compliance reporting.* A party that recertifies a BOB under § 1090.740 must include any deficits incurred from recertification in reports under § 1090.905(a) and (b).

(c) *Credit transactions.* A party that recertifies a BOB under § 1090.740 must report any credit transactions under § 1090.905(d).

§ 1090.915 Batch reporting for oxygenate producers and importers.

An oxygenate producer, for each of their production facilities, or an importer for the oxygenate they import, must submit a report for each compliance period that includes all the following information:

(a) The EPA-issued company and facility identifiers.

(b) The total volume of oxygenate produced or imported.

(c) For each batch of oxygenate produced or imported during the compliance period, all the following:

(1) The batch number.

(2) The date the batch was produced or imported.

(3) One of the following product types:

(i) Denatured ethanol using certified ethanol denaturant complying with § 1090.275.

(ii) Denatured ethanol from non-certified ethanol denaturant.

(iii) A specified oxygenate other than ethanol (*e.g.*, isobutanol).

(4) The volume of the batch, in gallons.

(5) The tested sulfur content of the batch, in ppm, and the test method used to measure the sulfur content.

(d) Any other information as EPA may require in order to administer reporting systems.

§ 1090.920 Reports by certified pentane producers.

A certified pentane producer must submit a report for each facility at which certified pentane was produced or imported that contains all the following information:

(a) The EPA-issued company and facility identifiers.

(b) For each batch of certified pentane produced or imported during the compliance period, all the following:

(1) The batch number.

(2) The date the batch was produced or imported.

(3) The batch volume, in gallons.

(4) The tested pentane content of the batch, as a volume percentage, and the test method used to measure the pentane content.

(5) The tested sulfur content of the batch, in ppm, and the test method used to measure the sulfur content.

(6) The tested benzene of the batch, as a volume percentage, and the test method used to measure the benzene content.

(7) The tested RVP of the batch, in psi, and the test method used to measure the RVP.

(c) Any other information as EPA may require in order to administer reporting systems.

§ 1090.925 Reports by independent surveyors.

(a) *General procedures.* An independent surveyor must meet the following requirements:

(1) Electronically submit any plans, notifications, or reports required under this part using forms and procedures specified by EPA.

(2) For each report required under this section, affirm that the survey was conducted in accordance with an EPA-approved survey plan and that the survey results are accurate.

(3) Include EPA-issued company identifiers on each report required under this section.

(4) Submit quarterly reports required under paragraphs (b) and (d) of this section by the following deadlines:

TABLE 1 TO PARAGRAPH (a)(4)—QUARTERLY REPORTING DEADLINES

Calendar quarter	Time period covered	Quarterly report deadline
Quarter 1	January 1–March 31	June 1.
Quarter 2	April 1–June 30	September 1.
Quarter 3	July 1–September 30	December 1.
Quarter 4	October 1–December 31	March 31.

(b) *NFSP quarterly reporting.* An independent surveyor conducting the NFSP under § 1090.1405 must submit the following information quarterly, as applicable:

(1) For each retail outlet sampled by the independent surveyor:

(i) The identification information for the retail outlet, as assigned by the surveyor in a consistent manner and as specified in the survey plan.

(ii) The displayed fuel manufacturer brand name at the retail outlet, if any.

(iii) The physical location (*i.e.*, address) of the retail outlet.

(2) For each gasoline sample collected by the independent surveyor:

(i) A description of the labeling of the fuel dispenser(s) (*e.g.*, ''E0'', ''E10'', ''E15'', etc.) from which the independent surveyor collected the sample.

(ii) The date and time the independent surveyor collected the sample.

(iii) The test results for the sample, and the test methods used, as determined by the independent surveyor, including the following parameters:

(A) The oxygen content, in weight percent.

(B) The type and amount of each oxygenate, by weight and volume percent.

(C) The sulfur content, in ppm.

(D) The benzene content, in volume percent.

(E) The specific gravity.

(F) The RVP in psi, if tested.

(G) The aromatic content in volume percent, if tested.

(H) The olefin content in volume percent, if tested.

(I) The distillation parameters, if tested.

(3) For each diesel sample collected at a retail outlet by the independent surveyor:

(i) A description of the labeling of the fuel dispenser(s) (*e.g.*, ''ULSD'') from which the independent surveyor collected the sample.

(ii) The date and time the independent surveyor collected the sample.

(iii) The tested sulfur content of the sample, and the test method used, as determined by the independent surveyor, in ppm.

(4) Any other information as EPA may require in order to administer reporting systems.

(c) *NFSP annual reporting.* An independent surveyor conducting the NFSP under § 1090.1405 must submit the following information annually by March 31.

(1) An identification of the parties that participated in the survey during the compliance period.

(2) An identification of each geographic area included in a survey.

(3) Summary statistics for each identified geographic area, including the following:

(i) The number of samples collected and tested.

(ii) The mean, median, and range expressed in appropriate units for each measured gasoline and diesel parameter.

(iii) The standard deviation for each measured gasoline and diesel parameter.

(iv) The estimated compliance rate for each measured gasoline and diesel parameter subject to a per-gallon standard in subpart C or D of this part.

(v) A summary of potential non-compliance issues.

(4) Any other information as EPA may require in order to administer reporting systems.

(d) *NSTOP quarterly reporting.* An independent surveyor conducting the NSTOP under § 1090.1450 must submit the following information quarterly, as applicable:

(1) For each gasoline manufacturing facility sampled by the independent surveyor:

(i) The EPA-issued company and facility identifiers for the gasoline manufacturer and the gasoline manufacturing facility.

(ii) [Reserved]

(2) For each gasoline sample collected by the independent surveyor:

(i) The designation of the gasoline.

(ii) The date and time the independent surveyor collected the sample.

(iii) The batch number or the sample identification number as assigned by the independent surveyor in a consistent manner and as specified in the survey plan.

(iv) A description of any instance in which the gasoline manufacturer did not follow the applicable sampling procedures.

(v) The test results for the sample, and the test methods used, as determined by the independent surveyor, including the following parameters:

(A) The sulfur content, in ppm.

(B) The benzene content, in volume percent.

(C) The RVP in psi, if tested.

(vi) The test results for the sample, and the test methods used, as determined by the gasoline manufacturer, including the following parameters:

(A) The sulfur content, in ppm.

(B) The benzene content, in volume percent.

(C) The RVP in psi, if tested.

(vii) If available, the test results for the sample, and the test methods used, as determined by EPA's National Vehicle and Fuel Emissions Laboratory, including the following parameters:

(A) The sulfur content, in ppm.

(B) The benzene content, in volume percent.

(C) The RVP in psi, if tested.

(viii) The determined site precision under § 1090.1450(c)(10)(i) and the test performance index under § 1090.1450(c)(10)(ii) for each method and instrument that the gasoline manufacturer used to test the sample.

(ix) The reproducibility of each method that the gasoline manufacturer used to test the sample.

(x) Any applicable correlation equations used to compare the gasoline manufacturer's test results to the independent surveyor's test results.

(3) Any other information as EPA may require in order to administer reporting systems.

§ 1090.930 Reports by auditors.

(a) Attest engagement reports required under subpart S of this part must be submitted by an independent auditor registered with EPA and associated with a company, or companies, through registration under subpart I of this part. Each attest engagement must clearly identify the company and compliance level (*e.g.*, facility), time period, and scope covered by the report. Attest engagement reports covered by this section include those required under this part, and under 40 CFR part 80, subpart M, beginning with the report due June 1, 2022.

(b) An attest engagement report must be submitted to EPA covering each compliance period by June 1 of the following calendar year. The auditor must make the attest engagement available to the company for which it was performed.

(c) The attest engagement must comply with subpart S of this part and the attest engagement report must clearly identify the methodologies followed and any findings, exceptions, and variances.

(d) A single attest engagement submission by the auditor may include procedures performed under this part and under 40 CFR part 80, subpart M. If a single submission method is used, the auditor must clearly and separately describe the procedures and findings for each program.

(e) The auditor must submit written acknowledgement from the RCO that the gasoline manufacturer has reviewed the attest engagement report.

§ 1090.935 Reports by diesel fuel manufacturers.

(a) *Batch reporting.* (1) For each compliance period, a ULSD manufacturer must submit the following information:

(i) The EPA-issued company and facility identifiers for the ULSD manufacturer.

(ii) The highest sulfur content observed for a batch of ULSD produced during the compliance period on a company level, in ppm.

(iii) The average sulfur concentration of all batches produced during the compliance period on a company level, in ppm.

(iv) A list of all batches of ULSD that exceeded the sulfur standard in § 1090.305(b) by facility. For each such batch, report the following:

(A) The batch number.

(B) The date the batch was produced.

(C) The volume of the batch, in gallons.

(D) The sulfur content of the batch, in ppm.

(E) The corrective action taken, if any.

(b) [Reserved]

Subpart K—Batch Certification and Designation

§ 1090.1000 Batch certification requirements.

(a) *General provisions.* (1) A fuel manufacturer, fuel additive manufacturer, or regulated blendstock producer must certify batches of fuel, fuel additive, or regulated blendstock as specified in this section.

(2) A fuel manufacturer, fuel additive manufacturer, or regulated blendstock producer does not need to certify fuel, fuel additive, or regulated blendstock that is exempt under subpart G of this part.

(3)(i) For purposes of this part, the volume of a batch is one of the following:

(A) The sum of all shipments or transfers of fuel, fuel additive, or regulated blendstock out of the tank or vessel in which the fuel, fuel additive, or regulated blendstock was certified.

(B) The entire volume of a tank or vessel may be certified as a single batch. In such cases, any heel left in the tank or vessel after shipments of the batch becomes PCG.

(ii) If a volume of fuel, fuel additive, or regulated blendstock is placed in a tank, certified (if not previously certified), and is not altered in any manner, then it is considered to be the same batch even if several shipments or transfers are made out of that tank.

(iii) Batch volumes must be temperature-corrected in accordance with § 1090.1350(d).

(4) For fuel produced at a facility that has an in-line blending waiver under § 1090.1315, the volume of the batch is the volume of product that is homogeneous under the requirements in § 1090.1337 and is produced during a period not to exceed 10 days.

(5) A fuel manufacturer must certify each batch of fuel at the facility where the fuel is produced or at a facility that is under the complete control of the fuel manufacturer before they transfer custody or title of the fuel to any other person.

(6) No person may sell, offer for sale, distribute, offer to distribute, supply,

offer for supply, dispense, store, transport, or introduce into commerce gasoline, diesel fuel, or ECA marine fuel that is not certified under this section.

(b) *Gasoline.* (1) A gasoline manufacturer must certify gasoline as specified in paragraph (b)(2) of this section prior to introduction into commerce.

(2) To certify batches of gasoline, a gasoline manufacturer must comply with all the following:

(i) Register with EPA as a refiner, blending manufacturer, importer, transmix processor, certified butane blender, or certified pentane blender under subpart I of this part, as applicable, prior to producing gasoline.

(ii) Ensure that each batch of gasoline meets the applicable requirements of subpart C of this part using the applicable procedures specified in subpart N of this part. A transmix processor must also meet all applicable requirements in subpart F of this part to ensure that each batch of gasoline meets the applicable requirements in subpart C of this part.

(iii) Assign batch numbers as specified in § 1090.1020.

(iv) Designate batches of gasoline as specified in § 1090.1010.

(3) PCG may be mixed with other PCG without re-certification if the resultant mixture complies with the applicable standards in subpart C of this part and is accurately and clearly designated under § 1090.1010. Resultant mixtures of PCG are not new batches and should not be assigned new batch numbers.

(4) Any person that mixes summer gasoline with summer or winter gasoline that has a different designation must comply with one of the following:

(i) Designate the resultant mixture as meeting the least stringent RVP designation of any batch that is mixed. For example, a distributor that mixes Summer RFG with 7.8 psi Summer CG must designate the mixture as 7.8 psi Summer CG.

(ii) Determine the RVP of the mixture using the procedures specified in subpart N of this part and designate the new batch under § 1090.1010 to reflect the RVP of the resultant mixture.

(5) Any person that mixes summer gasoline with winter gasoline to transition any storage tank from winter to summer gasoline is exempt from the requirement in paragraph (b)(4)(ii) of this section but must ensure that the gasoline meets the applicable RVP standard in § 1090.215.

(c) *Diesel fuel and ECA marine fuel.* (1) A diesel fuel or ECA marine fuel manufacturer must certify diesel fuel or ECA marine fuel as specified in paragraph (c)(2) of this section prior to introducing the fuel into commerce.

(2) To certify batches of diesel fuel or ECA marine fuel, a diesel fuel or ECA marine fuel manufacturer must comply with all the following:

(i) Register with EPA as a refiner, blending manufacturer, importer, or transmix processor under subpart I of this part, as applicable, prior to producing diesel fuel or ECA marine fuel.

(ii) Ensure that each batch of diesel fuel or ECA marine fuel meets the applicable requirements of subpart D of this part using the applicable procedures specified in subpart N of this part. A transmix processor must also meet all applicable requirements specified in subpart F of this part to ensure that each batch of diesel fuel or ECA marine fuel meets the applicable requirements in subpart D of this part.

(iii) Assign batch numbers as specified in § 1090.1020.

(iv) Designate batches of diesel fuel as specified in § 1090.1015.

(d) *Oxygenates.* (1) An oxygenate producer must certify oxygenates intended to be blended into gasoline as specified in paragraph (d)(2) of this section.

(2) To certify batches of oxygenates, an oxygenate producer must comply with all the following:

(i) Register with EPA as an oxygenate producer under subpart I of this part prior to producing or importing oxygenate intended for blending into gasoline.

(ii) Ensure that each batch of oxygenate meets the requirements in § 1090.270 by using the applicable procedures specified in subpart N of this part.

(iii) Assign batch numbers as specified in § 1090.1020.

(iv) Designate batches of oxygenate as intended for blending with gasoline as specified in § 1090.1010(c).

(e) *Certified butane.* (1) A certified butane producer must certify butane intended to be blended by a blending manufacturer under § 1090.1320 as specified in paragraph (e)(2) of this section.

(2) To certify batches of certified butane, a certified butane producer must comply with all the following:

(i) Ensure that each batch of certified butane meets the requirements in § 1090.250 by using the applicable procedures specified in subpart N of this part.

(A) Testing must occur after the most recent delivery into the certified butane producer's storage tank.

(B) The certified butane producer must provide documentation of the test results for each batch of certified butane to the certified butane blender.

(ii) Designate batches of certified butane as intended for blending with gasoline as specified in § 1090.1010(d).

(f) *Certified pentane.* (1) A certified pentane producer must certify pentane intended to be blended by a blending manufacturer under § 1090.1320 as specified in paragraph (f)(2) of this section.

(2) To certify batches of certified pentane, a certified pentane producer must comply with all the following:

(i) Register with EPA as a certified pentane producer under subpart I of this part prior to producing certified pentane.

(ii) Ensure that each batch of certified pentane meets the requirements in § 1090.255 by using the applicable procedures specified in subpart N of this part.

(A) Testing must occur after the most recent delivery into the certified pentane producer's storage tank, before transferring the certified pentane batch for delivery.

(B) The certified pentane producer must provide documentation of the test results for each batch of certified pentane to the certified pentane blender.

(iii) Assign batch numbers as specified in § 1090.1020.

(iv) Designate batches of certified pentane as intended for blending with gasoline as specified in § 1090.1010(d).

(g) *Certified ethanol denaturant.* (1) A certified ethanol denaturant producer must certify certified ethanol denaturant intended to be used to make DFE that meets the requirements in § 1090.275 as specified in paragraph (g)(2) of this section.

(2) To certify batches of certified ethanol denaturant, a certified ethanol denaturant producer must comply with all the following:

(i) Register with EPA as a certified ethanol denaturant producer under subpart I of this part prior to producing certified ethanol denaturant.

(ii) Ensure that each batch of certified ethanol denaturant meets the requirements in § 1090.275 by using the applicable procedures specified in subpart N of this part.

(iii) Assign batch numbers as specified in § 1090.1020.

(iv) Designate batches of certified ethanol denaturant as intended for blending with gasoline as specified in § 1090.1010(e).

§ 1090.1005 Designation of batches of fuels, fuel additives, and regulated blendstocks.

(a) A fuel manufacturer, fuel additive manufacturer, or regulated blendstock producer must designate batches of fuel, fuel additive, or regulated blendstock as specified in this subpart.

(b) A fuel manufacturer, fuel additive manufacturer, or regulated blendstock producer must designate the fuel, fuel additive, or regulated blendstock prior to the fuel, fuel additive, or regulated blendstock leaving the facility where it was produced and must include the designations on PTDs as specified in this subpart.

(c) By designating a batch of fuel, fuel additive, or regulated blendstock under this subpart, the designating party is acknowledging that the batch is subject to all applicable standards under this part.

(d) A person must comply with all provisions of this part even if they fail to designate or improperly designate a batch of fuel, fuel additive, or regulated blendstock.

(e) No person may use the designation provisions of this subpart to circumvent any standard or requirement in this part.

§ 1090.1010 Designation requirements for gasoline and regulated blendstocks.

(a) *Designation requirements for gasoline manufacturers.* A gasoline manufacturer must accurately and clearly designate each batch of gasoline as follows:

(1) A gasoline manufacturer must designate each batch of gasoline as one of the following fuel types:

(i) Winter RFG.

(ii) Summer RFG.

(iii) Winter RBOB.

(iv) Summer RBOB.

(v) Winter CG.

(vi) Summer CG.

(vii) Winter CBOB.

(viii) Summer CBOB.

(ix) Exempt gasoline under subpart G of this part (including additional identifying information).

(x) California gasoline.

(2) A gasoline manufacturer must further designate gasoline designated as Summer CG or Summer CBOB as follows:

(i) 7.8 psi Summer CG or Summer CBOB, respectively.

(ii) 9.0 psi Summer CG or Summer CBOB, respectively.

(iii) SIP-controlled Summer CG or Summer CBOB, respectively.

(3) A CBOB or RBOB manufacturer must further designate the CBOB or RBOB with the type(s) and amount(s) of oxygenate specified to be blended with the CBOB or RBOB as specified in § 1090.710(a)(5).

(4) In addition to any other applicable designation in this paragraph (a), gasoline designed for downstream oxygenate blending for which the gasoline manufacturer has not accounted for oxygenate added downstream under § 1090.710 must be designated as ''Intended for Oxygenate Blending'', along with a designation indicating the type(s) and amount(s) of oxygenate to be blended with the gasoline.

(b) *Designation requirements for gasoline distributors and certain gasoline blending manufacturers.* A gasoline distributor, certified butane blender, certified pentane blender, or party that recertifies BOB under § 1090.740 must accurately and clearly designate each batch or portion of a batch of gasoline for which they transfer custody to another facility as follows:

(1) A distributor must accurately and clearly classify each batch or portion of a batch of gasoline as specified by the gasoline manufacturer in paragraph (a) of this section.

(2) Except as specified in paragraph (b)(2)(vii) of this section, a distributor, certified butane blender, certified pentane blender, or party that recertifies BOB under § 1090.740 may redesignate a batch or portion of a batch of gasoline without recertifying the batch or portion of a batch as follows:

(i) Winter RFG or Winter RBOB may be redesignated as either Winter CG or Winter CBOB.

(ii) Winter CG or Winter CBOB may be redesignated as either Winter RFG or Winter RBOB.

(iii) Summer RFG, Summer RBOB, Summer CG, or Summer CBOB may be redesignated without recertification to a less stringent RVP designation. For example, a distributor could redesignate without recertification a portion of a batch of Summer RFG to 7.8 psi Summer CG or 9.0 psi Summer CG.

(iv) Summer RFG, Summer RBOB, Summer CG, or Summer CBOB may be redesignated without recertification as either Winter RFG, Winter RBOB, Winter CG, or Winter CBOB.

(v) Summer CG, Summer CBOB, or any winter gasoline may be redesignated to either Summer RFG or Summer RBOB, provided the RVP is determined using the applicable procedures specified in subpart N of this part and the new batch meets the RFG RVP standard specified in § 1090.215(a)(3).

(vi)(A) California gasoline may be redesignated as RFG or CG, with appropriate season designation and RVP designation under paragraph (a) of this section, if the requirements specified in § 1090.625(d) are met.

(B) California gasoline that is not redesignated under paragraph (b)(2)(vi)(A) of this section may instead be recertified as gasoline under § 1090.1000(b).

(vii) CG or RFG must not be redesignated as BOB.

(3) A distributor, certified butane blender, certified pentane blender, or party that recertifies BOB under § 1090.740 that redesignates a batch or

portion of a batch of gasoline under paragraph (b)(2) of this section must accurately and clearly designate the batch or portion of the batch of gasoline as specified in paragraph (a) of this section.

(c) *Designation requirements for oxygenate producers.* An oxygenate producer must accurately and clearly designate each batch of oxygenate intended for blending with gasoline as one of the following oxygenate types:

(1) DFE.

(2) The name of the specific oxygenate (*e.g.*, iso-butanol).

(d) *Designation requirements for certified butane and certified pentane.* A certified butane or certified pentane producer must accurately and clearly designate each batch of certified butane or certified pentane as one of the following types:

(1) Certified butane.

(2) Certified pentane.

(e) *Designation requirements for certified ethanol denaturant.* A certified ethanol denaturant producer must accurately and clearly designate batches of certified ethanol denaturant as ''certified ethanol denaturant''.

(f) *Designation requirements for TGP.* A transmix processor must accurately and clearly designate any TGP that they transfer to any other person as ''TGP''.

§ 1090.1015 Designation requirements for diesel and distillate fuels.

(a) *Designation requirements for diesel and distillate fuel manufacturers.* (1) Except as specified in paragraph (a)(3) of this section, a diesel fuel or distillate fuel manufacturer must accurately and clearly designate each batch of diesel fuel or distillate fuel as at least one of the following fuel types:

(i) ULSD. A diesel fuel manufacturer may also designate ULSD as 15 ppm MVNRLM diesel fuel.

(ii) 500 ppm LM diesel fuel.

(iii) Heating oil.

(iv) Jet fuel.

(v) Kerosene.

(vi) ECA marine fuel.

(vii) Distillate global marine fuel.

(viii) Certified NTDF.

(ix) Exempt diesel fuel or distillate fuel under subpart G of this part (including additional identifying information).

(2) Only a fuel manufacturer that complies with the requirements in § 1090.515 may designate fuel as 500 ppm LM diesel fuel.

(3) Any batch of diesel fuel or distillate fuel that is certified and designated as ULSD may also be designated as heating oil, kerosene, ECA marine fuel, jet fuel, or distillate global marine fuel if it is also suitable for such use.

(b) *Designation requirements for distributors of diesel and distillate fuels.* A distributor of diesel and distillate fuels must accurately and clearly designate each batch of diesel fuel or distillate fuel for which they transfer custody as follows:

(1) A distributor must accurately and clearly designate such diesel fuel or distillate fuel by sulfur content while it is in their custody (*e.g.*, as 15 ppm or 500 ppm).

(2) A distributor must accurately and clearly designate such diesel fuel or distillate fuel as specified by the diesel fuel or distillate fuel manufacturer under paragraph (a) of this section.

(3) A distributor may redesignate batches or portions of batches of diesel fuel or distillate fuel for which they transfer custody to another facility without recertifying the batch or portion of the batch as follows:

(i) ULSD that is also suitable for use as kerosene or jet fuel (commonly referred to as dual use kerosene) may be designated as ULSD, kerosene, or jet fuel (as applicable).

(ii) ULSD may be redesignated as 500 ppm LM diesel fuel, heating oil, kerosene, ECA marine fuel, jet fuel, or distillate global marine fuel without recertification if all applicable requirements under this part are met for the new fuel designation.

(iii) California diesel may be redesignated as ULSD if the requirements specified in § 1090.625(e) are met.

(iv) Heating oil, kerosene, ECA marine fuel, or jet fuel may be redesignated as ULSD if the fuel meets the ULSD standards in § 1090.305 and was designated as ULSD under paragraph (a) of this section.

(v) 500 ppm LM diesel fuel may be redesignated as ECA marine fuel, distillate global marine fuel, or heating oil. Any person that redesignates 500 ppm LM diesel fuel to ECA marine fuel or distillate global marine fuel must maintain records from the producer of the 500 ppm LM diesel fuel (*i.e.*, PTDs accompanying the fuel under § 1090.1115) to demonstrate compliance with the 500 ppm sulfur standard in § 1090.320(b).

(vi) Fuel designated as certified NTDF may be redesignated as ULSD without recertification if the applicable requirements of 40 CFR 80.1408 are met.

(c) *ULSD designation limitation*. No person may designate distillate fuel with a sulfur content greater than the sulfur standard in § 1090.305(b) as ULSD.

§ 1090.1020 Batch numbering.

(a) A fuel manufacturer, fuel additive manufacturer, or regulated blendstock producer must assign a number (the ''batch number'') to each batch of gasoline, diesel fuel, oxygenate, certified pentane, or certified ethanol denaturant either produced or imported. The batch number must, if available, consist of the EPA-assigned company registration number of the party that either produced or imported the fuel, fuel additive, or regulated blendstock, the EPA-assigned facility registration number where the fuel, fuel additive, or regulated blendstock was produced or imported, the last two digits of the year that the batch was either produced or imported, and a unique number for the batch, beginning with the number one (1) for the first batch produced or imported each calendar year and each subsequent batch during the calendar year being assigned the next sequential number (*e.g.*, 4321–54321–20–000001, 4321–54321–20–000002, etc.). EPA assigns company and facility registration numbers as specified in subpart I of this part.

(b) Certified butane or certified pentane blended with PCG during a period of up to one month may be included in a single batch for purposes of reporting to EPA.

(c) A gasoline manufacturer that recertifies BOBs under § 1090.740 may include up to a single month's volume as a single batch for purposes of reporting to EPA.

Subpart L—Product Transfer Documents

§ 1090.1100 General requirements.

(a) *General provisions*. (1) On each occasion when any person transfers custody or title to any product covered under this part, other than when fuel is sold or dispensed to the ultimate end user at a retail outlet or WPC facility, the transferor must provide the transferee PTDs that include the following information:

(i) The name and address of the transferor.

(ii) The name and address of the transferee.

(iii) The volume of the product being transferred.

(iv) The location of the product at the time of the transfer.

(v) The date of the transfer.

(2) The specific designations required for gasoline-related products specified in § 1090.1010 or distillate-related products specified in § 1090.1015.

(b) *Use of codes*. Except for transfers to a truck carrier, retailer, or WPC, product codes may be used to convey the information required under this subpart, if such codes are clearly understood by each transferee.

(c) *Part 80 PTD requirements*. For fuel, fuel additive, or regulated blendstock subject to 40 CFR part 80, subpart M, a party must also include the applicable PTD information required under 40 CFR 80.1453.

§ 1090.1105 PTD requirements for exempt fuels.

(a) In addition to the information required under § 1090.1100, on each occasion when any person transfers custody or title to any exempt fuel under subpart G of this part, other than when fuel is sold or dispensed to the ultimate end user at a retail outlet or WPC facility, the transferor must provide the transferee PTDs that include the following statements, as applicable:

(1) *National security exemption language*. For fuels with a national security exemption specified in § 1090.605:

''This fuel is for use in vehicles, engines, or equipment under an EPA-approved national security exemption only.''

(2) *R&D exemption language*. For fuels used for an R&D purpose specified in § 1090.610: ''For use in research, development, and test programs only.''

(3) *Racing fuel language*. For fuels used for racing purposes specified in § 1090.615: ''This fuel is for racing purposes only.''

(4) *Aviation fuel language*. For fuels used in aircraft specified in § 1090.615: ''This fuel is for aviation use only.''

(5) *Territory fuel exemption language*. For fuels for use in American Samoa, Guam, or the Commonwealth of the Northern Mariana Islands specified in § 1090.620: ''This fuel is for use only in Guam, American Samoa, or the Northern Mariana Islands.''

(6) *California gasoline language*. For California gasoline specified in § 1090.625: ''California gasoline''.

(7) *California diesel language*. For California diesel specified in § 1090.625: ''California diesel''.

(8) *Alaska, Hawaii, Puerto Rico, and U.S. Virgin Islands summer gasoline language*. For summer gasoline for use in Alaska, Hawaii, Puerto Rico, or the U.S. Virgin Islands specified in § 1090.630: ''This summer gasoline is for use only in Alaska, Hawaii, Puerto Rico, or the U.S. Virgin Islands.''

(9) *Exported fuel language*. For exported fuels specified in § 1090.645: ''This fuel is for export from the United States only.''

(b) In statements required by paragraph (a) of this section, where ''fuel'' is designated in a statement, the specific fuel type (for example, ''diesel fuel'' or ''gasoline'') may be used in place of the word ''fuel''.

§ 1090.1110 PTD requirements for gasoline, gasoline additives, and gasoline regulated blendstocks.

(a) *General requirements*. On each occasion when any person transfers custody or title of any gasoline, gasoline additive, or gasoline regulated blendstock, other than when fuel is sold or dispensed to the ultimate end user at a retail outlet or WPC facility, the transferor must provide the transferee PTDs that include the following information:

(1) All applicable information required under § 1090.1100 and this section.

(2) An accurate and clear statement of the applicable designation of the gasoline, gasoline additive, or gasoline regulated blendstock under § 1090.1010.

(b) *BOB language requirements*. For batches of BOB, in addition to the information required under paragraph (a) of this section, the following information must be included on the PTD:

(1) *Oxygenate type(s) and amount(s)*. Statements specifying each oxygenate type and amount (or range of amounts) for which the BOB was certified under § 1090.710(a)(5).

(2) *Summer BOB language requirements*. (i) Except as specified in paragraph (b)(2)(ii) of this section, for batches of summer BOB, identification of the product with one of the following statements indicating the applicable RVP standard in § 1090.215:

(A) ''9.0 psi CBOB. This product does not meet the requirements for summer reformulated gasoline.''

(B) ''7.8 psi CBOB. This product does not meet the requirements for summer reformulated gasoline.''

(C) ''RBOB. This product meets the requirements for summer reformulated or conventional gasoline.''

(ii) For BOBs designed to produce a finished gasoline that must meet an RVP standard required by any SIP approved or promulgated under 42 U.S.C. 7410 or 7502, additional or substitute language to satisfy the state program may be used as necessary but must include at a minimum the applicable RVP standard established under the SIP.

(c) *RFG and CG requirements*. For batches of RFG and CG, in addition to the information required under paragraph (a) of this section, the following information must be included on the PTD:

(1) *Summer gasoline language requirements*. (i) Except as specified in paragraph (c)(1)(ii) of this section, for summer gasoline, identification of the product with one of the following statements indicating the applicable RVP standard:

(A) For gasoline that meets the 9.0 psi RVP standard in § 1090.215(a)(1): ''9.0 psi Gasoline.''

(B) For gasoline that meets the 7.8 psi RVP standard in § 1090.215(a)(2): ''7.8 psi Gasoline.''

(C) For gasoline that meets the RFG 7.4 psi RVP standard in § 1090.215(a)(3): ''Reformulated Gasoline.''

(ii) For finished gasoline that meets an RVP standard required by any SIP approved or promulgated under 42 U.S.C. 7410 or 7502, additional or substitute language to satisfy the state program may be used as necessary.

(2) *Ethanol content language requirements.* (i) For gasoline-ethanol blends, one of the following statements that accurately describes the gasoline:

(A) For gasoline containing no ethanol (''E0''), the following statement: ''E0: Contains no ethanol.''

(B) For finished gasoline containing less than 9 volume percent ethanol, the following statement: ''EX—Contains up to X% ethanol.'' The term X refers to the maximum volume percent ethanol present in the gasoline-ethanol blend.

(C) For E10, the following statement: ''E10: Contains between 9 and 10 vol % ethanol.''

(D) For E15, the following statement: ''E15: Contains between 10 and 15 vol % ethanol.''

(E) For gasoline-ethanol blends containing more than 15 volume percent ethanol, the following statement: ''EXX: Contains up to XX vol % ethanol.'' The term XX refers to the maximum volume percent ethanol present in the gasoline-ethanol blend.

(ii) No person may designate a fuel as E10 if the fuel is produced by blending ethanol and gasoline in a manner designed to contain less than 9.0 or more than 10.0 volume percent ethanol.

(iii) No person may designate a fuel as E15 if the fuel is produced by blending ethanol and gasoline in a manner designed to contain less than 10.0 or more than 15.0 volume percent ethanol.

(d) *Oxygenate language requirements.* In addition to any other PTD requirements of this subpart, on each occasion when any person transfers custody or title to any oxygenate upstream of any oxygenate blending facility, the transferor must provide to the transferee PTDs that include the following information, as applicable:

(1) For DFE: ''Denatured fuel ethanol, maximum 10 ppm sulfur.''

(2) For other oxygenates, the name of the specific oxygenate must be identified on the PTD, followed by ''maximum 10 ppm sulfur.'' For example, for isobutanol, the following statement on the PTD would be required, ''Isobutanol, maximum 10 ppm sulfur.''

(e) *Gasoline detergent language requirements.* In addition to any other PTD requirements of this subpart, on each occasion when any person transfers custody or title to any gasoline detergent, the transferor must provide to the transferee PTDs that include the following information:

(1) The identity of the product being transferred as detergent, detergent-additized gasoline, or non-additized detergent gasoline.

(2) The name of the registered detergent must be used to identify the detergent additive package on its PTD and the LAC on the PTD must be consistent with the requirements in § 1090.260.

(f) *Gasoline additives language requirements.* In addition to any other PTD requirements of this subpart, on each occasion when any person transfers custody or title to any gasoline additive that meets the requirements in § 1090.265(a), the transferor must provide to the transferee PTDs that include the following information:

(1) The maximum allowed treatment rate of the additive so that the additive will contribute no more than 3 ppm sulfur to the finished gasoline.

(2) [Reserved]

(g) *Certified ethanol denaturant language requirements.* In addition to any other PTD requirements of this subpart, on each occasion when any person transfers custody or title to any certified ethanol denaturant that meets the requirements in § 1090.275, the transferor must provide to the transferee PTDs that include the following information:

(1) The following statement: ''Certified Ethanol Denaturant suitable for use in the manufacture of denatured fuel ethanol meeting EPA standards.''

(2) The PTD must state that the sulfur content is 330 ppm or less. If the

certified ethanol denaturant manufacturer represents a batch of denaturant as having a maximum sulfur content lower than 330 ppm, the PTD must instead state that lower sulfur maximum (*e.g.*, has a sulfur content of 120 ppm or less).

(h) *Butane and pentane language requirements.* (1) In addition to any other PTD requirements of this subpart, on each occasion when any person transfers custody or title to any certified butane or certified pentane, the transferor must provide to the transferee PTDs that include the following information:

(i) The certified butane or certified pentane producer company name and, for the certified pentane producer, the facility registration number issued by EPA.

(ii) One of the following statements, as applicable:

(A) ''Certified pentane for use by certified pentane blenders.''

(B) ''Certified butane for use by certified butane blenders.''

(2) PTDs must be transferred from each party transferring certified butane or certified pentane for use by a certified butane or certified pentane blender to each party that receives the certified butane or certified pentane through to the certified butane or certified pentane blender, respectively.

(i) *TGP language requirements.* In addition to any other PTD requirements of this subpart, on each occasion when any person transfers custody or title to any TGP, the transferor must provide to the transferee PTDs that include the following information:

(1) The following statement: ''Transmix Gasoline Product—not for use as gasoline.''

(2) [Reserved]

§ 1090.1115 PTD requirements for distillate and residual fuels.

(a) *General requirements.* On each occasion when any person transfers custody or title of any distillate or residual fuel, other than when fuel is sold or dispensed to the ultimate end user at a retail outlet or WPC facility, the transferor must provide the transferee PTDs that include the following information:

(1) The sulfur per-gallon standard that the transferor represents the fuel to meet under subpart D of this part (*e.g.*, 15 ppm sulfur for ULSD or 1,000 ppm sulfur for ECA marine fuel).

(2) An accurate and clear statement of the applicable designation(s) of the fuel under § 1090.1015 (*e.g.*, ''ULSD'', ''500 ppm LM diesel fuel'', or ''ECA marine fuel'').

(3) If the fuel does not meet the sulfur standard in § 1090.305(b) for ULSD, the following statement: ''Not for use in highway vehicles or engines or nonroad, locomotive, or marine engines.''

(b) *500 ppm LM diesel fuel language requirements.* For batches of 500 ppm LM diesel fuel, in addition to the information required under paragraph (a) of this section, PTDs must include the following information:

(1) The following statement: ''500 ppm sulfur (maximum) LM diesel fuel. For use only in accordance with a compliance plan under 40 CFR 1090.515(g). Not for use in highway vehicles or other nonroad vehicles and engines.''

(2) [Reserved]

(c) *ECA marine fuel language requirements.* For batches of ECA marine fuel, in addition to the information required under paragraph (a) of this section, PTDs must include the following information:

(1) The following statement: ''1,000 ppm sulfur (maximum) ECA marine fuel. For use in Category 3 marine vessels only. Not for use in Category 1 or Category 2 marine vessels.''

(2) A party may replace the required statement in paragraph (c)(1) of this section with the following statement for qualifying vessels under 40 CFR part 1043: ''High sulfur fuel. For use only in ships as allowed by MARPOL Annex VI, Regulation 3 or Regulation 4.''

(3) Under 40 CFR 1043.80, a fuel supplier (*i.e.*, the person who transfers custody or title of marine fuel onto a vessel) must provide bunker delivery notes to vessel operators.

(d) *Distillate global marine fuel language requirements.* For batches of distillate global marine fuel, in addition to the information required under paragraph (a) of this section, PTDs must include the following information:

(1) The following statement: ''5,000 ppm sulfur (maximum) Distillate Global Marine Fuel. For use only in steamships or Category 3 marine vessels outside of an Emission Control Area (ECA), consistent with MARPOL Annex VI.''

(2) [Reserved]

§ 1090.1120 PTD requirements for diesel fuel additives.

In addition to any other PTD requirements in this subpart, on each occasion when any person transfers custody or title to a diesel fuel additive that is subject to the provisions of § 1090.310 to a party in the additive distribution system or in the diesel fuel distribution system for use downstream of the diesel fuel manufacturing facility, the transferor must provide to the transferee PTDs that include the following information:

(a) For diesel fuel additives that comply with the sulfur standard in § 1090.310(a), the following statement: ''The sulfur content of this diesel fuel additive does not exceed 15 ppm.''

(b) For diesel fuel additives that meet the requirements in § 1090.310(b), the transferor must provide to the transferee PTDs that identify the additive as such, and comply with all the following:

(1) Indicate the high sulfur potential of the diesel fuel additive by including the following statement: ''This diesel fuel additive may exceed the federal 15 ppm sulfur standard. Improper use of this additive may result in non-compliant diesel fuel.''

(2) If the diesel fuel additive package contains a static dissipater additive or red dye having a sulfur content greater than 15 ppm, one of the following statements must be included that accurately describes the contents of the additive package:

(i) ''This diesel fuel additive contains a static dissipater additive having a sulfur content greater than 15 ppm.''

(ii) ''This diesel fuel additive contains red dye having a sulfur content greater than 15 ppm.''

(iii) ''This diesel fuel additive contains a static dissipater additive and red dye having a sulfur content greater than 15 ppm.''

(3) Include the following information:

(i) The diesel fuel additive package's maximum sulfur concentration.

(ii) The maximum recommended concentration for use of the diesel fuel additive package in diesel fuel, in volume percent.

(iii) The contribution to the sulfur content of the fuel (in ppm) that would result if the diesel fuel additive package is used at the maximum recommended concentration.

(c) For diesel fuel additives that are sold in containers for use by the ultimate consumer of diesel fuel, each transferor must display on the additive container, in a legible and conspicuous manner, one of the following statements, as applicable:

(1) For diesel fuel additives that comply with the sulfur standard in § 1090.310(a): ''This diesel fuel additive complies with the federal low sulfur content requirements for use in diesel motor vehicles and nonroad engines.''

(2) For diesel fuel additives that do not comply with the sulfur standard in § 1090.310(a), the following statement: ''This diesel fuel additive does not comply with federal ultra-low sulfur content requirements.''

§ 1090.1125 Alternative PTD language.

(a) Alternative PTD language to the language specified in this subpart may be used if approved by EPA in advance. Such language must contain all the applicable informational elements specified in this subpart.

(b) Requests for alternative PTD language must be submitted as specified in § 1090.10.

Subpart M—Recordkeeping

§ 1090.1200 General recordkeeping requirements.

(a) *Length of time records must be kept.* Records required under this part must be kept for 5 years from the date they were created, except that records relating to credit transfers must be kept by the transferor for 5 years from the date the credits were transferred and must be kept by the transferee for 5 years from the date the credits were transferred, used, or terminated, whichever is later.

(b) *Make records available to EPA.* On request by EPA, the records specified

in this part must be provided to EPA. For records that are electronically generated or maintained, the equipment and software necessary to read the records must be made available or, upon approval by EPA, electronic records must be converted to paper documents that must be provided to EPA.

§ 1090.1205 Recordkeeping requirements for all regulated parties.

(a) *Overview*. Any party subject to the requirements and provisions of this part must keep records containing the information specified in this section.

(b) *PTDs*. Any party that transfers custody or title of any fuel, fuel additive, or regulated blendstock must maintain the PTDs for which the party is the transferor or transferee.

(c) *Sampling and testing*. Any party that performs any sampling and testing on any fuel, fuel additive, or regulated blendstock must keep records of the following information:

(1) The location, date, time, and storage tank or truck, rail car, or vessel identification for each sample collected.

(2) The identification of the person(s) who collected the sample and the person(s) who performed the testing.

(3) The results of all tests as originally printed by the testing apparatus, or where no printed result is produced, the results as originally recorded by the person or apparatus that performed the test. Where more than one test is performed, all the results must be retained.

(4) The methodology used for any testing under this part.

(5) Records related to performance-based measurement and statistical quality control under §§ 1090.1360 through 1090.1375.

(6) Records related to gasoline deposit control testing under § 1090.1395.

(7) Records demonstrating the actions taken to stop the sale of any fuel, fuel additive, or regulated blendstock that is found not to be in compliance with applicable standards under this part, and the actions taken to identify the cause of any noncompliance and prevent future instances of noncompliance.

(d) *Registration*. Any party required to register under subpart I of this part must maintain records supporting the information required to complete and maintain the registration for the party's company and each registered facility. The party must also maintain copies of any confirmation received from the submission of such registration information to EPA.

(e) *Reporting*. Any party required to submit reports under subpart J of this part must maintain copies of all reports submitted to EPA. The party must also maintain copies of any confirmation received from the submission of such reports to EPA.

(f) *Exemptions*. Any party that produces or distributes exempt fuel, fuel additive, or regulated blendstock under subpart G of this part must keep the following records:

(1) Records demonstrating the designation of the fuel, fuel additive, or regulated blendstock under subparts G and K of this part.

(2) Copies of PTDs generated or accompanying the exempt fuel, fuel additive, or regulated blendstock.

(3) Records demonstrating that the exempt fuel, fuel additive, or regulated blendstock was actually used in accordance with the requirements of the applicable exemption(s) under subpart G of this part.

§ 1090.1210 Recordkeeping requirements for gasoline manufacturers.

(a) *Overview*. In addition to the requirements in § 1090.1205, a gasoline manufacturer must keep records for each of their facilities that include the information in this section.

(b) *Batch records*. For each batch of gasoline, a gasoline manufacturer must keep records of the following information:

(1) The results of tests, including any calculations necessary to transcribe or correlate test results into reported values under subpart J of this part, performed to determine gasoline properties and characteristics as specified in subpart N of this part.

(2) The batch volume.

(3) The batch number.

(4) The date the batch was produced or imported.

(5) The designation of the batch under § 1090.1010.

(6) The PTDs for any gasoline produced or imported.

(7) The PTDs for any gasoline received.

(c) *Downstream oxygenate accounting.* For BOB for which the gasoline manufacturer has accounted for oxygenate added downstream under § 1090.710, a gasoline manufacturer must keep records of the following information:

(1) The test results for hand blends prepared under § 1090.1340.

(2) Records that demonstrate that the gasoline manufacturer participates in the NFSP under § 1090.1405.

(3) Records that demonstrate that the gasoline manufacturer participates in the NSTOP under § 1090.1450.

(4) Compliance calculations specified in § 1090.700 based on an assumed addition of oxygenate.

(d) *PCG and TGP.* For new batches of gasoline produced by adding blendstock to PCG or TGP, a gasoline manufacturer must keep records of the following information:

(1) Records that reflect the storage and movement of the PCG or TGP and blendstock within the fuel manufacturing facility to the point such PCG or TGP is used to produce gasoline or BOB.

(2) For new batches of gasoline produced by adding blendstock to PCG or TGP under § 1090.1320(a)(1) or § 1090.1325, respectively, keep records of the following additional information:

(i) The results of tests to determine the sulfur content, benzene content, oxygenate(s) content, and in the summer, RVP, for the PCG or TGP and volume of the PCG or TGP when received at the fuel manufacturing facility.

(ii) Records demonstrating which specific batches of PCG or TGP were used in each new batch of gasoline.

(iii) Records demonstrating which blendstocks were used in each new batch of gasoline.

(iv) Records of the test results for sulfur content, benzene content, oxygenate(s) content, distillation parameters, and in the summer, RVP, for each new batch of gasoline.

(3) For new batches of gasoline produced by adding blendstock to PCG or TGP under § 1090.1320(a)(2), keep records of the following additional information:

(i) Records of the test results for sulfur content, benzene content, oxygenate(s) content, and in the summer, RVP, of each blendstock used to produce the new batch of gasoline.

(ii) Records of the test results for sulfur content and in the summer, RVP, of each new batch of gasoline.

(iii) Records demonstrating which blendstocks were used in each new batch of gasoline.

(e) *Certified butane and certified pentane blenders.* For certified butane or certified pentane blended into gasoline or BOB under § 1090.1320, a certified butane or certified pentane blender must keep records of the following information:

(1) The volume of certified butane or certified pentane added.

(2) The purity and properties of the certified butane or certified pentane specified in § 1090.250 or § 1090.255, respectively.

(f) *Importation of gasoline treated as blendstock.* For any imported GTAB, an importer must keep records of documents that reflect the storage and physical movement of the GTAB from the point of importation to the point of blending to produce gasoline or the point at which the GTAB was certified as gasoline.

(g) *ABT.* A gasoline manufacturer must keep records of the following information related to their ABT activities under subpart H of this part, as applicable:

(1) Compliance sulfur values and compliance benzene values under § 1090.700, and the calculations used to determine those values.

(2) The number of valid credits in possession of the gasoline manufacturer at the beginning of each compliance period, separately by facility and compliance period of generation.

(3) The number of credits generated by the gasoline manufacturer under § 1090.725, separately by facility and compliance period of generation.

(4) If any credits were obtained from or transferred to other parties, all the following for each other party:

(i) The party's name.

(ii) The party's EPA company registration numbers.

(iii) The number of credits obtained from or transferred to the party.

(5) The number of credits that expired at the end of each compliance period, separately by facility and compliance period of generation.

(6) The number of credits that will be carried over into the next compliance period, separately by facility and compliance period of generation.

(7) The number of credits used, separately by facility and compliance period of generation.

(8) Contracts or other commercial documents that establish each transfer of credits from the transferor to the transferee.

(9) Documentation that supports the number of credits transferred between facilities within the same company (*i.e.*, intracompany transfers).

§ 1090.1215 Recordkeeping requirements for diesel fuel, ECA marine fuel, and distillate global marine fuel manufacturers.

(a) *Overview.* In addition to the requirements in § 1090.1205, a diesel fuel or ECA marine fuel manufacturer must keep records for each of their facilities that include the information in this section.

(b) *Batch records.* For each batch of ULSD, 500 ppm LM diesel fuel, or ECA marine fuel, a diesel fuel or ECA marine fuel manufacturer must keep records of the following information:

(1) The batch volume.

(2) The batch number.

(3) The date the batch was produced or imported.

(4) The designation of the batch under § 1090.1015.

(5) All documents and information created or used for the purpose of batch designation under § 1090.1015, including PTDs for the batch.

(c) *Distillate global marine fuel manufacturers.* For distillate global marine fuel, a distillate global marine fuel manufacturer must keep records of the following information:

(1) The designation of the fuel as distillate global marine fuel.

(2) The PTD for the distillate global marine fuel.

§ 1090.1220 Recordkeeping requirements for oxygenate blenders.

(a) *Overview.* In addition to the requirements in § 1090.1205, an oxygenate blender that blends oxygenate into gasoline must keep records that include the information in this section.

(b) *Oxygenate blenders.* For each occasion that an oxygenate blender blends oxygenate into gasoline, the oxygenate blender must keep records of the following information:

(1) The date, time, location, and identification of the blending tank or truck in which the blending occurred.

(2) The volume and oxygenate requirement of the gasoline to which oxygenate was added.

(3) The volume, type, and purity of the oxygenate that was added, and documents that show the supplier(s) of the oxygenate used.

§ 1090.1225 Recordkeeping requirements for gasoline additives.

(a) *Gasoline additive manufacturers.* In addition to the requirements in § 1090.1205, a gasoline additive manufacturer must keep records of the following information for each batch of additive produced or imported:

(1) The batch volume.

(2) The date the batch was produced or imported.

(3) The PTD for the batch.

(4) The maximum recommended treatment rate.

(5) The gasoline additive manufacturer's control practices that demonstrate that the additive will contribute no more than 3 ppm on a per-gallon basis to the sulfur content of gasoline when used at the maximum recommended treatment rate.

(b) *Parties that take custody of gasoline additives.* Except for gasoline additives packaged for addition to gasoline in the vehicle fuel tank, all parties that take custody of gasoline additives for bulk addition to gasoline—from the producer through to the gasoline additive blender that adds the additive to gasoline—must keep records of the following information:

(1) The PTD for each batch of gasoline additive.

(2) The treatment rate at which the additive was added to gasoline, as applicable.

(3) The volume of gasoline that was treated with the additive, as applicable. A new record must be initiated in each case where a new batch of additive is mixed into a storage tank from which the additive is drawn to be injected into gasoline.

§ 1090.1230 Recordkeeping requirements for oxygenate producers.

(a) *Oxygenate producers.* In addition to the requirements in § 1090.1205, an oxygenate producer must keep records of the following information for each batch of oxygenate:

(1) The batch volume.

(2) The batch number.

(3) The date the batch was produced or imported.

(4) The PTD for the batch.

(5) The sulfur content of the batch.

(6) The sampling and testing records specified in § 1090.1205(c), if the sulfur content of the batch was determined by analytical testing.

(b) *DFE producers.* In addition to the requirements of paragraph (a) of this section, a DFE producer must keep records of the following information for each batch of DFE if the sulfur content of the batch was determined under § 1090.1330:

(1) The name and title of the person who calculated the sulfur content of the batch.

(2) The date the calculation was performed.

(3) The calculated sulfur content.

(4) The sulfur content of the neat (un-denatured) ethanol.

(5) The date each batch of neat ethanol was produced.

(6) The neat ethanol batch number.

(7) The neat ethanol batch volume.

(8) As applicable, the neat ethanol production quality control records, or the test results on the neat ethanol, including all the following:

(i) The location, date, time, and storage tank or truck identification for each sample collected.

(ii) The name and title of the person who collected the sample and the person who performed the test.

(iii) The results of the test as originally printed by the testing apparatus, or where no printed result is produced, the results as originally recorded by the person who performed the test.

(iv) Any record that contains a test result for the sample that is not identical to the result recorded in paragraph (b)(8)(iii) of this section.

(v) The test methodology used.

(9) The sulfur content of each batch of denaturant used, and the volume percent at which the denaturant was added to neat (un-denatured) ethanol to produce DFE.

(10) The PTD for each batch of denaturant used.

(c) *Parties that take custody of oxygenate.* All parties that take custody of oxygenate—from the oxygenate producer through to the oxygenate blender—must keep records of the following information:

(1) The PTD for each batch of oxygenate.

(2) [Reserved]

§ 1090.1235 Recordkeeping requirements for ethanol denaturant.

(a) *Certified ethanol denaturant producers.* In addition to the requirements in § 1090.1205, a certified ethanol denaturant producer must keep records of the following information for each batch of certified ethanol denaturant:

(1) The batch volume.

(2) The batch number.

(3) The date the batch was produced or imported.

(4) The PTD for the batch.

(5) The sulfur content of the batch.

(b) *Parties that take custody of ethanol denaturants.* All parties that take custody of denaturant designated as suitable for use in the production of DFE under § 1090.270(b) must keep records of the following information:

(1) The PTD for each batch of denaturant.

(2) The volume percent at which the denaturant was added to ethanol, as applicable.

§ 1090.1240 Recordkeeping requirements for gasoline detergent blenders.

(a) *Overview.* In addition to the requirements in § 1090.1205, a gasoline detergent blender must keep records that include the information in this section.

(b) *Gasoline detergent blenders.* A gasoline detergent blender must keep records of the following information:

(1) The PTD for each detergent used.

(2) For an automated detergent blending facility, the following information:

(i) The dates of the VAR Period.

(ii) The total volume of detergent blended into gasoline, as determined using one of the following methods, as applicable:

(A) For a facility that uses in-line meters to measure the amount of detergent blended, the total volume of detergent measured, together with supporting data that includes one of the following:

(*1*) The beginning and ending meter readings for each meter being measured.

(*2*) Other comparable metered measurements.

(B) For a facility that uses a gauge to measure the inventory of the detergent storage tank, the total volume of detergent must be calculated as follows:

$$V_D = DI_i - DI_f + DI_a - DI_w$$

Where:

V_D = Volume of detergent.
DI_i = Initial detergent inventory of the tank.
DI_f = Final detergent inventory of the tank.
DI_a = Sum of any additions to detergent inventory.
DI_w = Sum of any withdrawals from detergent inventory for purposes other than the additization of gasoline.

(C) The value of each variable in the equation in paragraph (b)(2)(ii)(B) of this section must be separately recorded. Recorded volumes of detergent must be expressed to the nearest gallon (or smaller units), except that detergent volumes of five gallons or less must be expressed to the nearest tenth of a gallon (or smaller units). However, if the blender's equipment is unable to accurately measure to the nearest tenth of a gallon, then such volumes must be rounded downward to the next lower gallon.

(iii) The total volume of gasoline to which detergent has been added, together with supporting data that includes one of the following:

(A) The beginning and ending meter measurements for each meter being measured.

(B) The metered batch volume measurements for each meter being measured.

(C) Other comparable metered measurements.

(iv) The actual detergent concentration, calculated as the total volume of detergent added (as determined under paragraph (b)(2)(ii) of this section) divided by the total volume of gasoline (as determined under paragraph (b)(2)(iii) of this section). The concentration must be calculated and recorded to four digits and rounded as specified in § 1090.50.

(v) The initial detergent concentration rate, together with the date and description of each adjustment to any initially set concentration.

(vi) If the detergent injector is set below the applicable LAC, or adjusted by more than 10 percent above the concentration initially set in the VAR Period, documentation establishing that the purpose of the change is to correct a batch misadditization prior to the end of the VAR Period and prior to the transfer of the batch to another party or to correct an equipment malfunction and the date and adjustments of the correction.

(vii) Documentation reflecting the performance and results of the calibration of detergent equipment under § 1090.1390.

(3) For a non-automated detergent blending facility, keep records of the following information:

(i) The date of additization.

(ii) The volume of detergent added.

(iii) The volume of gasoline to which the detergent was added.

(iv) The actual detergent concentration, calculated as the volume of detergent added (per paragraph (b)(3)(ii) of this section) divided by the volume of gasoline (per paragraph (b)(3)(iii) of this section). The concentration must be calculated and recorded to four digits and rounded as specified in § 1090.50.

§ 1090.1245 Recordkeeping requirements for independent surveyors.

(a) *Overview*. In addition to the requirements in § 1090.1205, an independent surveyor must keep records that include the information in this section.

(b) *Independent surveyors*. An independent surveyor must keep records of the following information, as applicable:

(1) Records related to the NFSP under § 1090.1405.

(2) Records related to a geographically-focused E15 survey program under § 1090.1420(b).

(3) Records related to the NSTOP under § 1090.1450.

§ 1090.1250 Recordkeeping requirements for auditors.

(a) *Overview*. In addition to the requirements in § 1090.1205, an auditor must keep records that include the information in this section.

(b) *Auditors*. An auditor must keep records of the following information:

(1) Documents pertaining to the performance of each audit performed under subpart S of this part, including all correspondence between the auditor and the fuel manufacturer.

(2) Copies of each attestation report prepared and all related records developed to prepare the attestation report.

§ 1090.1255 Recordkeeping requirements for transmix processors, transmix blenders, transmix distributors, and pipeline operators.

(a) *Overview*. In addition to the requirements in § 1090.1205, a transmix processor, transmix blender, transmix distributor, or pipeline operator must keep records that include the information in this section.

(b) *Transmix*. (1) A transmix processor or transmix distributor must keep records that reflect the results of any sampling and testing required under subpart F or M of this part.

(2) A transmix processor must keep records showing the volumes of TGP recovered from transmix and the type and amount of any blendstock or PCG added to make gasoline from TGP under § 1090.505.

(3) A transmix processor that adds blendstock to TGP or PCG must keep records under § 1090.1210(d).

(4) A transmix blender must keep records showing compliance with the quality assurance program and/or sampling and testing requirements in § 1090.500, and for each batch of gasoline with which transmix is blended, the volume of the batch, and the volume of transmix blended into the batch.

(c) *500 ppm LM diesel fuel*. A manufacturer or distributor of 500 ppm LM diesel fuel using transmix must keep records of the following information, as applicable:

(1) Copies of the compliance plan required under § 1090.515(g).

(2) Documents demonstrating how the party complies with each applicable element of the compliance plan under § 1090.515(g).

(3) Documents and copies of calculations used to determine compliance with the 500 ppm LM diesel fuel volume requirements under § 1090.515(c).

(4) Documents or information that demonstrates that the 500 ppm LM diesel fuel was only used in locomotive and marine engines that are not required to use ULSD under 40 CFR 1033.815 and 40 CFR 1042.660, respectively.

(d) *Pipeline operators*. A pipeline operator must keep records that demonstrate compliance with the interface handling practices in § 1090.520.

Subpart N—Sampling, Testing, and Retention

§ 1090.1300 General provisions.

(a) This subpart is organized as follows:

(1) Sections 1090.1310 through 1090.1330 specify the scope of required testing, including special provisions that apply in several unique circumstances.

(2) Sections 1090.1335 through 1090.1345 specify handling procedures for collecting and retaining samples. Sections 1090.1350 through 1090.1375 specify the procedures for measuring the specified parameters. These procedures apply to anyone who performs testing under this subpart.

(3) Section 1090.1390 specifies the requirements for calibrating automated detergent blending equipment.

(4) Section 1090.1395 specifies the procedures for testing related to gasoline deposit control test procedure.

(b) If you need to meet requirements for a quality assurance program at a minimum frequency, your first batch of product triggers the testing requirement. The specified frequency serves as a deadline for performing the required testing, and as a starting point for the next testing period. The following examples illustrate the requirements for testing based on sampling the more frequent of every 90 days or 500,000 gallons

of certified butane you received from a supplier:

(1) If your testing period starts on March 1 and you use less than 500,000 gallons of butane from March 1 through May 29 (90 days), you must perform testing under a quality assurance program sometime between March 1 and May 29. Your next test period starts with the use of butane on May 30 and again ends after 90 days or after you use 500,000 gallons of butane, whichever occurs first.

(2) If your testing period starts on March 1 and you use 500,000 gallons of butane for the testing period on April 29 (60 days), you must perform testing under a quality assurance program sometime between March 1 and April 29. Your next testing period starts with the use of butane on April 30 and again ends after 90 days or after you use 500,000 gallons of butane, whichever occurs first.

(c) Anyone acting on behalf of a regulated party to demonstrate compliance with requirements under this part must meet the requirements of this subpart in the same way that the party needs to meet those requirements for its own testing. The regulated party and the third party will both be liable for any violations arising from the third party's failure to meet the requirements of this subpart.

(d) Anyone performing tests under this subpart must apply good laboratory practices for all sampling, measurement, and calculations related to testing required under this part. This requires performing these procedures in a way that is consistent with generally accepted scientific and engineering principles and properly accounting for all available relevant information.

(e) Subpart Q of this part has provisions related to importation, including additional provisions that specify how to meet the sampling and testing requirements of this subpart.

SCOPE OF TESTING

§ 1090.1310 Testing to demonstrate compliance with standards.

(a) Perform testing as needed to certify fuel, fuel additive, or regulated blendstock as specified in subpart K of this part. This section specifies additional test requirements.

(b) A fuel manufacturer, fuel additive manufacturer, or regulated blendstock producer must perform the following measurements before fuel, fuel additive, or regulated blendstock from a given batch leaves the facility, except as specified in § 1090.1315:

(1) *Diesel fuel.* Perform testing for each batch of ULSD, 500 ppm LM diesel fuel, and ECA marine fuel to demonstrate compliance with sulfur standards.

(2) *Gasoline.* Perform testing for each batch of gasoline to demonstrate compliance with sulfur standards and perform testing for each batch of summer gasoline to demonstrate compliance with RVP standards.

(c) The following testing provisions apply for gasoline, oxygenate, certified ethanol denaturant, certified butane, and certified pentane:

(1) A gasoline manufacturer producing BOB for which oxygenate added downstream is accounted for under § 1090.710 must prepare a hand blend as specified in § 1090.1340 and perform the following measurements:

(i) Measure the sulfur content of both the BOB and the hand blend.

(ii) Except as specified in § 1090.1325(c), measure the benzene content of the hand blend.

(iii) For Summer CG, measure the RVP of the BOB.

(iv) For Summer RFG, measure the RVP of the hand blend.

(2) A gasoline manufacturer producing gasoline for which oxygenate added downstream is not accounted for under § 1090.710 (*e.g.*, E0 or so-called suboctane gasoline) must perform the following measurements:

(i) Measure the sulfur content of the gasoline.

(ii) Except as specified in § 1090.1325(c), measure the benzene content of the gasoline.

(iii) For Summer CG and Summer RFG, measure the RVP of the gasoline.

(iv) For Summer RFG that is designated as ''Intended for Oxygenate Blending'' under § 1090.1010(a)(4), create a hand blend as specified in § 1090.1340 and measure the RVP of the hand blend.

(v) For gasoline blended with oxygenate, measure the oxygenate content of the gasoline.

(3) An oxygenate producer must measure the sulfur content of each batch of oxygenate, except that a DFE producer may meet the alternative requirements in § 1090.1330.

(4) An ethanol denaturant producer that certifies denaturant under § 1090.1330 must measure the sulfur content of each batch of denaturant.

(5) A certified butane or certified pentane producer must perform sampling and testing to demonstrate compliance with purity specifications and sulfur and benzene standards as specified in § 1090.1320.

(6) A transmix processor producing gasoline from TGP must test each batch of gasoline for parameters required to demonstrate compliance with § 1090.505 as specified in § 1090.1325.

(d) A blending manufacturer producing gasoline by adding blendstock to PCG must comply with § 1090.1320.

(e) For gasoline produced at a fuel blending facility or a transmix processing facility, a gasoline manufacturer must measure such gasoline for oxygenate and for distillation parameters (*i.e.*, T10, T50, T90, final boiling point, and percent residue). However, a fuel manufacturer or transmix processor does not need to measure the oxygenate content of gasoline if PCG, transmix, TGP, and blendstocks used to produce the batch did not contain any oxygenates, based on the following documentation:

(1) For PCG, documentation consists of oxygenate content identified on PTDs.

(2) For transmix, TGP, and blendstocks, documentation consists of affidavits or oxygenate test results from the person providing the transmix or blendstock stating that these products do not contain oxygenate.

§ 1090.1315 In-line blending.

A fuel manufacturer using in-line blending equipment may qualify for a waiver from the requirement in § 1090.1310(b) to test every batch of fuel before the fuel leaves the fuel manufacturing facility as follows:

(a) Submit a request signed by the RCO to EPA with the following information:

(1) Describe the location of your in-line blending operation, how long it has been in operation, and how much of each type and grade of fuel you have blended over the preceding 3 years (or since starting the in-line blending operation if it is less than 3 years). Describe the physical layout of the blending operation and how you move the blended fuel into distribution. Also describe how your automated system monitors and controls blending proportions and the properties of the blended fuel. For new installations, describe these as a planned operation with projected volumes by type and grade. Describe clearly which portions of your blending operation are the subject of your waiver request.

(2) Describe how you collect and test composite fuel samples in a way that is equivalent to measuring the fuel properties of a batch of blended fuel as specified in this subpart. Also describe how your procedures conform to the sampling specifications in ASTM D4177 and the composite calculations in ASTM D5854 (both incorporated by reference in § 1090.95).

(3) Describe any expectation or plan for you or another party to perform additional downstream testing for the same fuel parameters.

(4) Describe your quality assurance procedures. Explain how you will ensure that all fuel will meet all applicable per-gallon standards. Describe any experiences from the previous 3 years where these quality assurance procedures led you to make corrections to your in-line blending operation. Describe how you will deal with release of fuel that fails to meet a per-gallon standard.

(5) Describe any times from the previous 3 years that you modified fuel after it left your facility. Describe how you modified the fuel and why that was necessary.

(6) Describe how you will meet the auditing requirements specified in § 1090.1850 and any additional, facility-specific considerations that relate to those auditing requirements.

(b) You must arrange for an audit of your blending operation each calendar

year as specified in § 1090.1850. The audit must review procedures and documents to determine whether measured and calculated values properly represent the aggregate fuel properties for the blended fuel.

(c) You must submit an updated in-line blending waiver request to EPA 60 days before making any material change to your in-line blending process. Examples of material changes include changing analyzer hardware or programming, changing the location of the analyzer, changing the piping configuration, changing the mixing control hardware or programming logic, changing sample compositors or compositor settings, or expanding fuel blending capacity. Changing the name of the company or business unit is an example of a change that is not material.

(d) If EPA approves your request for a waiver under this section, you may need to update your procedures for more effective control and documentation of measured fuel parameters based on audit results, development of improved practices, or other information.

§ 1090.1320 Adding blendstock to PCG.

The requirements of this section apply for a refiner or blending manufacturer that adds blendstock to PCG to produce a new batch of gasoline. Paragraph (b) of this section specifies an alternative approach for a certified butane or certified pentane blender. Section 1090.1325 describes additional provisions that apply to a transmix processor.

(a) Sample and test using one of the following methods to exclude PCG from the compliance demonstration for sulfur and benzene:

(1) *Compliance by subtraction.* (i) Determine the sulfur content, benzene content, and oxygenate content of the PCG before blending blendstocks to produce a new batch of gasoline as follows:

(A) Sample and test the sulfur content, benzene content, and oxygenate content of each batch of PCG. The blending manufacturer does not need to test PCG for oxygenate content if they can demonstrate that the PCG does not contain oxygenates as specified in paragraph (a)(1)(i)(C) of this section or § 1090.1310(e)(1).

(B) If the PCG is a BOB, prepare a hand blend under § 1090.1340 and test the hand blend for sulfur content and benzene content.

(C) The blending manufacturer may use the PCG manufacturer's certification test results if the PCG was received directly from the PCG manufacturer by an in-tank transfer or tank-to-tank transfer within the same terminal as long as the results are from the PCG that is being transferred.

(ii) Determine the volume of PCG that was blended with blendstock to produce a new batch of gasoline. Report the PCG as a negative batch as specified in § 1090.905(c)(3)(i).

(iii) After adding blendstock to PCG, sample and test the sulfur content, benzene content, and for summer gasoline, RVP, of the new batch of gasoline.

(iv) Determine the volume of the new batch of gasoline. Report the new batch of gasoline as a positive batch as specified in § 1090.905(c)(3)(ii).

(v) Include the PCG batch and the new batch of gasoline in compliance calculations as specified in § 1090.700(d)(4)(i).

(vi) The sample retention requirements in § 1090.1345 apply for both the new batch of gasoline and the associated PCG.

(2) *Compliance by addition.* (i) Sample and test the sulfur content and benzene content of each batch of blendstock used to produce a new batch of gasoline from PCG using the procedures in § 1090.1350. The homogeneity requirements for gasoline specified in § 1090.1337 apply to blendstock and GTAB collected with manual sampling.

(ii) Determine the volume of each batch of blendstock used to produce the new batch of gasoline.

(iii) Determine the volume of each blended batch of gasoline, and measure the sulfur content and for summer gasoline, RVP, for each blended batch of gasoline using the procedures specified in § 1090.1350. Testing the blended batch of gasoline for sulfur content, however, is not required if the fuel manufacturer tests the added blendstock and determines that both the blendstock and

PCG meet the fuel manufacturing facility gate sulfur per-gallon standard in § 1090.205(b).

(iv) Report each batch of blendstock as specified in § 1090.905(c)(4).

(v) Include each batch of blendstock in compliance calculations as specified in § 1090.700(d)(4)(ii).

(vi) The sample retention requirements in § 1090.1345 apply for the new batch of gasoline and for each blendstock.

(b) A certified butane or certified pentane blender that blends certified butane or certified pentane into PCG to make a new batch of gasoline may comply with the following requirements instead of the requirements of paragraph (a) of this section:

(1) For summer gasoline, measure RVP of the blended fuel. The fuel manufacturer may rely on sulfur and benzene test results from the certified butane or certified pentane producer. Note that § 1090.220(e) disallows adding certified butane or certified pentane to Summer RFG or Summer RBOB.

(2) Before blending the certified butane or certified pentane with PCG, obtain a copy of the producer's test results indicating that the certified butane or certified pentane meets the standards in § 1090.250 or § 1090.255, respectively.

(3) The certified pentane blender must enter into a contract with the certified pentane producer to verify that the certified pentane producer has an adequate quality assurance program to ensure that the certified pentane received will not be contaminated in transit.

(4) The certified butane or certified pentane blender must conduct a quality assurance program to demonstrate that the certified butane or certified pentane meets the standards specified in § 1090.250 or § 1090.255, respectively. The quality assurance program must be based on sampling the more frequent of every 90 days or 500,000 gallons of certified butane or certified pentane received from each distributor. The certified butane or certified pentane blender may rely on a third party to perform the testing.

(c) This paragraph describes provisions that apply in cases where PCG is a BOB for which the PCG manufacturer accounted for oxygenate added downstream under § 1090.710 and the blending manufacturer makes a new batch that includes less oxygenate than was specified for the BOB by the PCG manufacturer. A blending manufacturer in this circumstance does not qualify for the small volume blender exemption for BOB recertification under § 1090.740(a)(3) and must comply with all the following.

(1) Calculate and incur sulfur and benzene deficits under the BOB recertification provisions in § 1090.740.

(2) Comply with either the compliance by subtraction requirements of paragraph (a)(1) of this section or the compliance by addition requirements of paragraph (a)(2) of this section. For compliance by subtraction, test the PCG without adding oxygenate (*i.e.*, test the PCG ''neat''), and report the PCG volume without adjusting for the volume of oxygenate that the PCG manufacturer specified under § 1090.740.

§ 1090.1325 Adding blendstock or PCG to TGP.

The following provisions apply to a transmix processor or blending manufacturer producing gasoline by adding blendstock or PCG to TGP:

(a) Determine the volume, sulfur content, and benzene content of each blendstock batch used to produce gasoline for reporting and compliance calculations by following the sampling and testing requirements in § 1090.1320 and treating the TGP used to produce the gasoline as PCG.

(b) Sample and test the gasoline made from TGP and PCG or blendstock to demonstrate compliance with the fuel manufacturing facility gate sulfur per-gallon standard in § 1090.205(b) and the applicable RVP standard in § 1090.215.

(c) A transmix processor producing gasoline by only adding TGP to PCG does not have to measure the benzene content of the finished gasoline.

§ 1090.1330 Preparing denatured fuel ethanol.

Instead of measuring every batch, a DFE producer or importer may calculate the sulfur content of a batch of DFE as follows:

(a) Determine the sulfur content of ethanol before adding denaturant by measuring it as specified in § 1090.1310 or by estimating it based on your production quality control procedures.

(b) Use the ppm sulfur content of certified ethanol denaturant specified on the PTD for the batch. If the sulfur content is specified as a range, use the maximum specified value.

(c) Calculate the weighted sulfur content of the DFE using the values determined under paragraphs (a) and (b) of this section.

HANDLING AND PREPARING SAMPLES

§ 1090.1335 Collecting, preparing, and testing samples.

(a) *General provisions.* Use good laboratory practice to collect samples to represent the batch you are testing. For example, take steps to ensure that a batch is always well mixed before sampling. Also, always take steps to prevent sample contamination, such as completely flushing sampling taps and piping and pre-rinsing sample containers with the product being sampled. Follow the procedures in paragraph (b) of this section for manual sampling. Follow the procedures paragraph (c) of this section for automatic sampling. Additional requirements for measuring RVP are specified in paragraph (d) of this section. A description of how to determine compliance based on single or multiple tests on single or multiple samples is specified in paragraph (e) of this section.

(b) *Manual sampling.* Perform manual sampling using one of the methods specified in ASTM D4057 (incorporated by reference in § 1090.95) to demonstrate compliance with standards as follows:

(1) Collect a ''running'' or ''all-levels'' sample from the top of the tank. Drawing a sample from a standpipe is acceptable only if it is slotted or perforated to ensure that the drawn sample properly represents the whole batch of fuel.

(2)(i) Use tap sampling or spot sampling to collect upper, middle, and lower samples if a running or all-levels sample is impractical for a given storage configuration. Collect samples that most closely match the recommendations in Table 5 of ASTM D4057. Adjust spot sampling for partially filled tanks as shown in Table 1 or Table 5 of ASTM D4057, as applicable.

(ii) Spot sampling must not be used for certification testing unless the tank contains less than 10 feet of product.

(3) If the procedures in paragraphs (b)(1) and (2) of this section are impractical for a given storage configuration, you may use alternative sampling procedures as specified in ASTM D4057. This applies primarily for sampling with trucks, railcars, retail stations, and other downstream locations.

(4) Test results with manual sampling are valid only after you demonstrate homogeneity as specified in § 1090.1337.

(5) Except as specified for marine vessels in § 1090.1605, you must not do certification testing with a composite sample from manual sampling.

(c) *Automatic sampling.* (1) For in-line blending waivers under § 1090.1315, follow all specifications for automatic sampling as specified in EPA's approval letter instead of or in addition to the specifications in paragraph (c)(2) of this section. Automatic sampling is also appropriate for a configuration involving a pipeline filling a tank that will be certified as compliant before it leaves the fuel manufacturing facility gate.

(2) Perform automatic sampling as specified in ASTM D4177 (incorporated by reference in § 1090.95), with the following additional specifications:

(i) Configure the system to ensure a well-mixed stream at the sampling point. Align the start and end of sampling with the start and end of creating the batch.

(ii) The default sampling frequency must follow the recommended approach of at least 9,604 samples to represent a batch. Less frequent sampling is acceptable as long as the interval between samples does not exceed 20 seconds throughout the batch.

(iii) Collect three samples for individual measurements in addition to the composite sample. Draw head, middle, and tail samples after flowing 15, 50, and 85 percent of the estimated batch volume, respectively.

(iv) EPA may approve a different sampling strategy under an approved

in-line blending waiver under § 1090.1315 if it is appropriate for a given facility or for a small-volume batch.

(d) *Sampling provisions related to measuring RVP of summer gasoline.* The following additional provisions apply for preparing samples to measure RVP of summer gasoline:

(1) Meet the additional specifications for manual and automatic sampling in ASTM D5842 (incorporated by reference in § 1090.95).

(2) If you measure other fuel parameters for a given sample in addition to RVP testing, always measure RVP first.

(e) *Testing to demonstrate compliance with standards.* (1) Perform testing as specified in this subpart.

(2) For parameters subject to per-gallon standards, report the highest measured value (or the lowest measured value for testing related to cetane index or other parameters that are subject to a standard representing a minimum value). This applies for repeat tests on a given sample and for testing multiple samples (including head, middle, and tail samples from automatic sampling). A batch is noncompliant if any tested sample does not meet all applicable per-gallon standards.

(3) In the case of automatic sampling for parameters subject to average standards, report the result from the composite sample to represent the batch for demonstrating compliance with the average standard. For any repeat testing with the composite sample, calculate the arithmetic average from all tests to represent the batch.

(4) In the case of manual sampling for parameters subject to average standards, determine the value representing the batch as follows:

(i) For testing with only a single sample, report that value to represent the batch. If there are repeat tests with that sample, report the arithmetic average from all tests to represent the sample.

(ii) For testing with more than one sample, report the arithmetic average from all tested samples to represent the batch. If there are repeat tests for any sample, calculate the arithmetic average of those repeat tests to determine a single value to represent that sample before calculating the average value to represent the batch.

§ 1090.1337 Demonstrating homogeneity.

(a) Certification test results corresponding to manual sampling as specified in § 1090.1335(b) are valid only if collected samples meet the homogeneity specifications in this section, except that the homogeneity testing requirement does not apply in the following cases:

(1) There is only a single sample using the procedure specified in § 1090.1335(b)(2).

(2) Upright cylindrical tanks that have a liquid depth of less than 10 feet.

(3) You draw spot or tap samples as specified in paragraph (c) of this section, test each sample for every parameter subject to a testing requirement, and use the worst-case test result for each parameter for purposes of reporting, meeting per-gallon and average standards, and all other aspects of compliance.

(4) Sampling at a downstream location where it is not possible to collect separate samples and steps are taken to ensure that the batch is well mixed.

(b)(1) Testing performed to establish homogeneity is not considered certification testing, except as specified in paragraph (b)(2) of this section.

(2) Homogeneity testing may be used as certification testing if any of the following criteria are met:

(i) All tested samples meet all applicable per-gallon standards.

(ii) The testing meets the requirement in § 1090.1335(b)(2)(ii).

(iii) The testing follows the procedures specified in paragraph (a)(3) of this section.

(c) Use spot sampling as specified in § 1090.1335(b)(2) for homogeneity testing. Tap sampling is acceptable if spot sampling is impractical for a given facility.

(d) Demonstrate homogeneity for gasoline using two of the procedures specified in this paragraph (d) with each sample. For summer gasoline, the homogeneity demonstration must include RVP measurement.

(1) Measure API gravity using ASTM D287, ASTM D1298, ASTM D4052, or

ASTM D7777 (incorporated by reference in § 1090.95).

(2) Measure the sulfur content as specified in § 1090.1360.

(3) Measure the benzene content as specified § 1090.1360.

(4) Measure the RVP as specified in § 1090.1360.

(e) For testing to meet the diesel fuel standards in subpart D of this part, demonstrate homogeneity using one of the procedures specified in paragraph (d)(1) or (2) of this section.

(f) Consider the batch to be homogeneous for a given parameter if the measured values for all tested samples vary by less than the published reproducibility of the test method multiplied by 0.75 (R × 0.75). If reproducibility is a function of measured values, calculate reproducibility using the average value of the measured parameter representing all tested samples. Calculate using all meaningful significant figures as specified for the test method, even if § 1090.1350(c) describes a different precision. For cases that do not require a homogeneity demonstration under paragraph (a) of this section, the lack of homogeneity demonstration does not prevent a quantity of fuel, fuel additive, or regulated blendstock from being considered a batch for demonstrating compliance with the requirements of this part.

§ 1090.1340 Preparing a hand blend from BOB.

(a) If you produce or import BOB and instruct downstream blenders to add oxygenate, you must meet the requirements of this subpart by blending oxygenate that reflects the anticipated sulfur content and benzene content of the oxygenate for blending into a BOB sample. To do this, prepare each hand blend by adding oxygenate to the BOB sample in a way that corresponds to your instructions to downstream blenders for the sampled batch of fuel. Prepare a hand blend as follows:

(1) Take steps to avoid introducing high or low bias in sulfur content when selecting from available samples to prepare the hand blend. For example, if there are three samples with discrete sulfur measurements, select the sample with the mid-range sulfur content. In other cases, randomly select the sample.

(2) If your instructions allow for a downstream blender to add more than one type or concentration of oxygenate, prepare the hand blend as follows:

(i) For summer gasoline intended for blending with ethanol, use the lowest specified ethanol blend.

(ii) For all winter gasoline and for summer gasoline intended for blending only with oxygenate other than ethanol, use the lowest specified oxygenate concentration, regardless of the type of oxygenate.

(iii) As an example, if you give instructions for a given batch of BOB to perform downstream blending to make E10, E15, and an 8 percent blend with butanol, prepare a hand blend for testing winter gasoline with 8 percent butanol, and prepare an E10 hand blend for testing summer gasoline.

(b) Prepare the hand blend using the procedures specified in ASTM D7717 (incorporated by reference in § 1090.95). The hand blend must have an amount of oxygenate that does not exceed the oxygenate concentration specified on the PTD for the BOB under § 1090.1110(b)(1).

§ 1090.1345 Retaining samples.

(a) Retain samples as follows:

(1) A fuel manufacturer, regulated blendstock producer, or independent surveyor must keep representative samples of gasoline, diesel fuel, or oxygenate that is subject to certification testing requirements under this subpart for at least 30 days after testing is complete, except that a longer sample retention of 90 days applies for a blending manufacturer that produces gasoline.

(2) A certified pentane producer must keep representative samples of certified pentane for at least 30 days after testing is complete.

(3) A blending manufacturer required to test blendstock under § 1090.1320(a)(2) must keep representative samples of the blendstock and the new batch of gasoline for at least 90 days after testing is complete.

(4) An oxygenate producer or importer must keep oxygenate samples as follows:

(i) Keep a representative sample of any tested oxygenate. Also keep a representative sample of DFE if you used the provisions of § 1090.1330 to calculate its sulfur content.

(ii) Keep all the samples you collect over the previous 21 days. If you have fewer than 20 samples from the previous 21 days, continue keeping the most recent 20 samples collected up to a maximum of 90 days for any given sample.

(5) The nominal volume of retained liquid samples must be at least 330 ml. If you have only a single sample for testing, keep that sample after testing is complete. If you collect multiple samples from a single batch or you create a hand blend, select a representative sample as follows:

(i) If you are required to test a hand blend under § 1090.1340, keep a sample of the BOB and a sample representative of the oxygenate used to prepare the hand blend.

(ii) For summer gasoline, keep an untested (or less tested) sample that is most like the tested sample, as applicable. In all other cases, keep the tested (or most tested) sample.

(b) [Reserved]

(c) Keep records of all calculations, test results, and test methods for the batch associated with each stored sample.

(d) If EPA requests a test sample, you must follow EPA's instructions and send it to EPA by a courier service (or equivalent). The instructions will describe where and when to send the sample. For each test sample, you must identify the test results and test methods used.

(e) You are responsible for meeting the requirements of this section even if a third party performs testing and stores the fuel samples for you.

MEASUREMENT PROCEDURES

§ 1090.1350 Overview of test procedures.

A fuel manufacturer, fuel additive manufacturer, regulated blendstock producer, or independent surveyor meets the requirements of this subpart based on laboratory measurements of the specified fuel parameters. Test procedures for these measurements apply as follows:

(a) Except as specified in paragraph (b) of this section, the Performance-based Measurement System specified in §§ 1090.1360 through 1090.1375 applies for all testing specified in this subpart for the following fuels and fuel parameters:

(1) Sulfur content of diesel fuel.

(2) Sulfur content of ECA marine fuel.

(3) RVP, sulfur content, benzene content, and oxygenate content of gasoline. The procedures for measuring sulfur in gasoline in this subpart also apply for testing sulfur in certified ethanol denaturant; however, demonstrating compliance for alternative procedures in § 1090.1365 and statistical quality control in § 1090.1375 do not apply for sulfur concentration above 80 ppm.

(4) Sulfur content of butane.

(b) Specific test procedures apply for measuring other fuel parameters, as follows:

(1) Determine the cetane index of diesel fuel as specified in ASTM D976 or ASTM D4737 (incorporated by reference in § 1090.95). There is no cetane-related test requirement for biodiesel that meets ASTM D6751 (incorporated by reference in § 1090.95).

(2) Measure aromatic content of diesel fuel as specified in ASTM D1319 or ASTM D5186 (incorporated by reference in § 1090.95). You may use an alternative procedure if you correlate your test results with ASTM D1319 or ASTM D5186. There is no aromatics-related test requirement for biodiesel that meets ASTM D6751.

(3) Measure the purity of butane as specified in ASTM D2163 (incorporated by reference in § 1090.95). Measure the purity of pentane as specified in ASTM D2163 or ASTM D5134 (incorporated by reference in § 1090.95).

(4) Measure the benzene content of butane and pentane as specified in ASTM D2163, ASTM D5134, ASTM D6729, or ASTM D6730 (incorporated by reference in § 1090.95).

(5) Measure the sulfur content of pentane as specified in ASTM D5453 (incorporated by reference in § 1090.95).

(6) Measure distillation parameters as specified in ASTM D86 (incorporated

by reference in § 1090.95). You may use an alternative procedure if you correlate your test results with ASTM D86.

(7) Measure the sulfur content of neat ethanol as specified in ASTM D5453. You may use an alternative procedure if you adequately correlate your test results with ASTM D5453.

(8) Measure the phosphorus content of gasoline as specified in ASTM D3231 (incorporated by reference in § 1090.95).

(9) Measure the lead content of gasoline as specified in ASTM D3237 (incorporated by reference in § 1090.95).

(10) Measure the sulfur content of gasoline additives and diesel fuel additives as specified in ASTM D2622 (incorporated by reference in § 1090.95).

(11) Use referee procedures specified in § 1090.1360(d) and the following additional methods to measure gasoline fuel parameters to meet the survey requirements of subpart O of this part:

TABLE 1 TO PARAGRAPH (b)(11)—ADDITIONAL SURVEY TEST METHODS

Fuel parameter	Units	Test method [1]
Distillation	°C	ASTM D86.
Aromatic content	volume percent	ASTM D5769.
Olefin content	volume percent	ASTM D6550.

[1] ASTM specifications are incorporated by reference, see § 1090.95.

(12) Updated versions of the test procedures specified in this section are acceptable as alternative procedures if both repeatability and reproducibility are the same or better than the values specified in the earlier version.

(c) Record measured values with the following precision, with rounding in accordance with § 1090.50:

(1) Record sulfur content to the nearest whole ppm.

(2) Record benzene to the nearest 0.01 volume percent.

(3) Record RVP to the nearest 0.01 psi.

(4) Record oxygenate content to the nearest 0.01 mass percent for each calibrated oxygenate.

(5) Record diesel aromatic content to the nearest 0.1 volume percent, or record cetane index to the nearest whole number.

(6) Record gasoline aromatic and olefin content to the nearest 0.1 volume percent.

(7) Record distillation parameters to the nearest whole degree.

(d) For any measurement or calculation that depends on the volume of the test sample, correct the volume of the sample to a reference temperature of 15.56 °C. Use a correction equation that is appropriate for each tested compound. This applies for all fuels, blendstocks, and additives, except butane.

§ 1090.1355 Calculation adjustments and corrections.

Adjust measured values as follows:

(a) Adjust measured values for total vapor pressure as follows:

$$\text{RVP (psi)} = 0.956 \cdot P_{total} - 0.347$$

Where:

P_{total} = Measured total vapor pressure, in psi.

(b) For measuring the sulfur content and benzene content of gasoline, adjust a given test result upward in certain circumstances, as follows:

(1) If your measurement method involves a published procedure with a Pooled Limit of Quantitation (PLOQ), treat the PLOQ as your final result if your measured result is below the PLOQ.

(2) If your measurement method involves a published procedure with a limited scope but no PLOQ, treat the lower bound of the scope as your final result if your measured result is less than that value.

(3) If you establish a Laboratory Limit of Quantitation (LLOQ) below the lower bound of the scope of the procedure as specified in ASTM D6259 (incorporated by reference in § 1090.95), treat the LLOQ as your final result if your measured result is less than the LLOQ. Note that this option is meaningful only if the LLOQ is less than a published PLOQ, or if there is no published PLOQ.

(c) For measuring the sulfur content of ULSD at a downstream location, subtract 2 ppm from the result.

(d) For measuring the benzene content of butane and pentane, report a zero value if the test result is at or below the PLOQ or Limit of Detection (LOD) that applies for the test method.

(e) If measured content of any oxygenate compound is less than 0.20 percent by mass, record the result as ''None detected.''

§ 1090.1360 Performance-based Measurement System.

(a) The Performance-based Measurement System (PBMS) is an approach that allows for laboratory testing with any procedure that meets specified performance criteria. This subpart specifies the performance criteria for measuring certain fuel parameters to demonstrate compliance with the standards and other specifications of this part. These provisions do not apply to process stream analyzers used with inline blending.

(b) Different requirements apply for absolute fuel parameters and method-defined fuel parameters.

(1) Absolute fuel parameters are those for which it is possible to evaluate measurement accuracy by comparing measured values of a test sample to a reference sample with a known value for the measured parameter. The following are absolute fuel parameters:

(i) Sulfur. This applies for measuring sulfur in any fuel, fuel additive, or regulated blendstock.

(ii) [Reserved]

(2) Method-defined fuel parameters are all those that are not absolute fuel parameters. Additional test provisions apply for method-defined fuel parameters under this section because there is no reference sample for evaluating measurement accuracy.

(c) The performance criteria of this section apply as follows:

(1) Section 1090.1365 specifies the initial qualifying criteria for all measurement procedures. You may use an alternative procedure only if testing shows that you meet the initial qualifying criteria.

(2) Section 1090.1375 specifies ongoing quality testing requirements that apply for a laboratory that uses either referee procedures or alternative procedures.

(3) Streamlined requirements for alternative procedures apply for procedures adopted by a voluntary consensus standards body (VCSB). Certification testing with non-VCSB procedures requires advance approval by EPA. Procedures are considered non-VCSB testing as follows:

(i) Procedures developed by individual companies or other parties are considered non-VCSB procedures.

(ii) Draft procedures under development by a VCSB organization are considered non-VCSB procedures until they are approved for publication.

(iii) A published procedure is considered non-VCSB for testing with fuel parameters that fall outside the range of values covered in the research report of the ASTM D6708 (incorporated by reference in § 1090.95) assessment comparing candidate alternative procedures to the referee procedure specified in paragraph (d) of this section.

(4) You may use updated versions of the referee procedures as alternative procedures subject to the limitations of § 1090.1365(a)(2). You may ask EPA for approval to use an updated version of the referee procedure for qualifying other alternative procedures if the updated referee procedure has the same or better repeatability and reproducibility compared to the version specified in § 1090.95. If the updated procedure has worse repeatability or reproducibility compared to the earlier version, you must complete the required testing specified in § 1090.1365 using the older, referenced version of the referee procedure.

(5) Any laboratory may use the specified referee procedure without qualification testing. To use alternative procedures at a given laboratory, you must perform the specified testing to demonstrate compliance with precision and accuracy requirements, with the following exceptions:

(i) Testing you performed to qualify alternative procedures under 40 CFR part 80 continues to be valid for making the demonstrations required in this part.

(ii) Qualification testing is not required for a laboratory that measures the benzene content of gasoline using

Procedure B of ASTM D3606 (incorporated by reference in § 1090.95). However, qualification testing may be necessary for updated versions of this procedure as specified in § 1090.1365(a)(2).

(d) Referee procedures are presumed to meet the initial qualifying criteria in this section. You may use alternative procedures if you qualify them using the referee procedures as a benchmark as specified in § 1090.1365. The following are the referee procedures:

TABLE 1 TO PARAGRAPH (d)—REFEREE PROCEDURES FOR QUALIFYING ALTERNATIVE PROCEDURES

Tested product	Parameter	Referee procedure [1]
ULSD, 500 ppm diesel fuel, ECA marine fuel, gasoline.	Sulfur	ASTM D2622.
Butane	Sulfur	ASTM D6667.
Gasoline	oxygenate content.	ASTM D5599.
Gasoline	RVP	ASTM D5191, except as specified in § 1090.1355(a).
Gasoline	benzene	ASTM D5769.

[1] ASTM specifications are incorporated by reference, see § 1090.95.

§ 1090.1365 Qualifying criteria for alternative measurement procedures.

This section specifies how to qualify alternative procedures for measuring absolute and method-defined fuel parameters under the Performance-based Analytical Test Method specified in § 1090.1360.

(a) The following general provisions apply for qualifying alternative procedures:

(1) Alternative procedures must have appropriate precision to allow for reporting to the number of decimal places specified in § 1090.1350(c).

(2) Testing to qualify an alternative procedure applies for the specified version of the procedure you use for making the necessary measurements. For referee procedures and for alternative procedures for method-defined fuel parameters that you have qualified for your laboratory, updated versions of those same procedures are qualified without further testing, as long as the specified reproducibility is the same as or better than the values specified in the earlier version. For absolute fuel parameters, updated versions are qualified without testing if both repeatability and reproducibility are the same as or better than the values specified in the earlier version.

(3) Except as specified in paragraph (d) of this section, testing to demonstrate compliance with the precision and accuracy specifications in this section apply only for the laboratory where the testing occurred.

(4) If a procedure for measuring benzene or sulfur in gasoline has no specified PLOQ and no specified scope with a lower bound, you must establish a LLOQ for your laboratory.

(5) Testing for method-defined fuel parameters must take place at a reference installation as specified in § 1090.1370.

(b) All alternative procedures must meet precision criteria based on a calculated maximum allowable standard deviation for a given fuel parameter as specified in this paragraph (b). The precision criteria apply for measuring the parameters and fuels specified in paragraph (b)(3) of this section. Take the following steps to qualify the measurement procedure for measuring a given fuel parameter:

(1) The fuel must meet the parameter specifications in Table 1 to paragraph (b)(3) of this section. This may require that you modify the fuel you typically produce to be within the specified range. Absent a specification (maximum or minimum), select a fuel representing values that are typical for your testing. Store and mix the fuel to maintain a homogenous mixture throughout the measurement period to ensure that each fuel sample drawn from the batch has the same properties.

(2) Measure the fuel parameter from a homogeneous fuel batch at least 20 times. Record each result in sequence. Do not omit any valid results unless you use good engineering judgment to determine that the omission is necessary and you document those results and the reason for excluding them. Perform this analysis over a 20-day period. You may make up to 4 separate measurements in a 24-hour period, as long as the interval between measurements is at least 4 hours. Do not measure RVP more than once from a single sample.

(3) Calculate the maximum allowable standard deviation as follows:

$$\sigma_{max} = x_1 \cdot \frac{x_2}{x_3}$$

Where:

σ_{max} = Maximum allowable standard deviation.

x_1, x_2, and x_3 have the values from the following table:

TABLE 1 TO PARAGRAPH (b)(3)—PRECISION CRITERIA FOR QUALIFYING ALTERNATIVE PROCEDURES

Fuel, fuel additive, or regulated blendstock	Fuel parameter	Range	x_1	x_2 = Repeatability (r) or reproducibility (R) [1]	x_3	Fixed values of σ_{max}	Source [2]
ULSD	Sulfur	5 ppm minimum	1.5	r = 1.33	2.77	0.72	ASTM D3120–08 (R2019).
500 ppm LM diesel fuel	Sulfur	350 ppm minimum	1.5	r = 21.3	2.77	11.5	ASTM D2622–16.
ECA marine fuel	Sulfur	700 ppm minimum	1.5	37.1	2.77	20.1	ASTM D2622–16.
Butane	Sulfur		1.5	$r = 0.1152.x$	2.77		ASTM D6667–14 (R2019).
Gasoline	Sulfur		1.5	$r = 0.4998.x^{0.54}$	2.77		ASTM D7039–15a (R2020).
Gasoline	oxygenate		0.3	$R = 0.13.x^{0.83}$	1		ASTM D5599–18.
Gasoline	RVP [3]		0.3	R = 0.40	1	0.12	ASTM D5191–20.
Gasoline	Benzene		0.15	$R = 0.221.x^{0.67}$	1		ASTM D5769–20.

[1] Calculate repeatability and reproducibility using the average value determined from testing. Use units as specified in § 1090.1350(c).

[2] ASTM publications are incorporated by reference, see § 1090.95. Note that the listed procedure may be different than the referee procedure identified in § 1090.1360(d), or it may be an older version of the referee procedure.

[3] Use only 1-liter containers for testing to qualify alternative methods.

(c) Alternative VCSB procedures for measuring absolute fuel parameters (sulfur) must meet accuracy criteria based on the following measurement procedure:

(1) Obtain gravimetric sulfur standards to serve as representative reference samples. The samples must have known sulfur content within the ranges specified in paragraph (c)(3) of this section. The known sulfur content is the accepted reference value (ARV) for the fuel sample.

(2) Measure the sulfur content of the fuel sample at your laboratory at least 10 times, without interruption. Use good laboratory practice to compensate for any known chemical interferences; however, you must apply that same compensation for all tests to measure the sulfur content of a test fuel. Calculate the arithmetic average of all the measured values, including any compensation.

(3) The measurement procedure meets the accuracy requirement as follows:

(i) Demonstrate accuracy for measuring sulfur in gasoline, gasoline regulated blendstock, and gasoline additive using test fuels to represent sulfur values from 1 to 10 ppm, 11 to 20 ppm, and 21 to 95 ppm. You may omit any of these ranges if you do not perform testing with fuel in that range. Calculate the maximum allowable difference between the average measured value and ARV for each applicable range as follows:

$$\Delta_{max} = 0.75 \cdot \sigma_{max}$$

Where:

Δ_{max} = Maximum allowable difference.

σ_{max} = the maximum allowable standard deviation from paragraph (b)(3) of this section using the sulfur content represented by ARV.

(ii) Demonstrate accuracy for measuring sulfur in diesel fuel using test fuels meeting the specifications in Table 2 to this section. For testing diesel-related blendstocks and additives, use representative test samples meeting the appropriate sulfur specification. Table 2 to this paragraph also identifies the maximum allowable difference between average measured values and ARV corresponding to ARV at the upper end of the specified ranges. These values are based on calculations with the equation in paragraph (c)(3)(i) of this section, with parameter values set to be equal to the standard.

TABLE 2 TO PARAGRAPH (c)(3)(ii)—ACCURACY CRITERIA FOR QUALIFYING ALTERNATIVE PROCEDURES WITH DIESEL FUEL AND DIESEL-RELATED BLENDSTOCKS AND ADDITIVES

Fuel	Sulfur content (ppm)	Illustrated maximum allowable differences
ULSD	10–20	0.54
500 ppm LM diesel fuel	450–500	8.65
ECA marine fuel	900–1,000	15.1

(d) Alternative VCSB procedures for measuring method-defined fuel parameters must meet accuracy criteria as follows:

(1) You may use the alternative procedure only if you follow all the statistical protocols and meet all the criteria specified in Section 6 of ASTM D6708 (incorporated by reference in §1090.95) when comparing your measurements using the alternative procedure to measurements at a reference installation using the appropriate referee procedure identified in §1090.1360(d).

(2) For qualifying alternative procedures, determine whether the alternative procedure needs a correlation equation to correct bias relative to the reference test method. Create such a correlation equation as specified in Section 7 of ASTM D6708. For all testing, apply the correlation equation to adjust measured values to be statistically consistent to measuring with the reference test method.

(3) If an alternative VCSB procedure states that the procedure has a successful assessment relative to the referee procedures in this section under ASTM D6708, that finding applies for all laboratories using that procedure.

(e) Alternative non-VCSB procedures for measuring absolute fuel parameters (sulfur) must meet accuracy criteria as follows:

(1) Demonstrate whether the procedure meets statistical criteria and whether it needs a correlation equation as specified in paragraphs (d)(1) and (2) of this section. Apply the correlation equation for all testing with the alternative procedure.

(2) Demonstrate at your laboratory that the alternative procedure meets the accuracy criteria specified in paragraph (c) of this section.

(3) Send EPA a written request to use the alternative procedure. In your request, fully describe the procedure to show how it functions for achieving accurate measurements and include detailed information related to your assessment under paragraph (e)(1) and (2) of this section.

(f) Alternative non-VCSB procedures for measuring method-defined fuel parameters must meet accuracy and precision criteria as follows:

(1) Demonstrate whether the procedure meets statistical criteria and whether it needs a correlation equation as specified in paragraphs (e)(1) and (2) of this section. Apply the correlation equation for all testing with the alternative procedure.

(2) Test with a range of fuels that are typical of those you will analyze at your laboratory. Use either consensus-named fuels or locally-named reference materials. Consensus-named fuels are homogeneous fuel quantities sent around to different laboratories for analysis, which results in a ''consensus name'' representing the average value of the parameter for all participating laboratories. Locally named reference materials are fuel samples analyzed using the reference test method, either at your laboratory or at a reference installation, to establish an estimated value for the fuel parameter; locally named reference materials usually come from the fuel you produce.

(3) You may qualify your procedure as meeting the requirements of paragraph (f)(1) of this section only for a narrower, defined range of fuels. If this is the case, identify the appropriate range of fuels in your request for approval and describe how you will screen fuel samples accordingly.

(4) Qualify the precision of the alternative procedure by comparing results to testing with the referee procedure based on ''between methods reproducibility,'' Rxy, as specified in ASTM D6708. The Rxy must be at or below 75 percent of the reproducibility of the referee procedure in § 1090.1360(d).

(5) Perform testing at your laboratory as specified in paragraph (b) of this section to establish the repeatability of the alternative procedure. The repeatability must be as good as or better than that specified in paragraph (b)(3) of this section.

(6) Fully describe the procedure to show how it functions for achieving accurate measurements. Describe the technology, test instruments, and testing method so a competent person lacking experience with the procedure and test instruments would be able to replicate the results.

(7) Engage a third-party auditor to review and verify your information as follows:

(i) The auditor must qualify as an independent third party and meet the specifications for technical ability as specified in § 1090.55.

(ii) The auditor must send you a report describing their inspection of your laboratories and their review of the information supporting your request to use the alternative procedure. The report must describe how the auditor performed the review, identify any errors or discrepancies, and state whether the information supports a conclusion that the alternative procedure should be approved.

(iii) The auditor must keep records related to the review for at least 5 years after sending you the report and provide those records to EPA upon request.

(8) Send EPA a written request to use the alternative procedure. Include the specified information and any additional information EPA needs to evaluate your request.

(g) Keep fuel samples from any qualification testing under this section for at least 180 days after you have taken all steps to qualify an alternative procedure under this section. This applies for testing at your laboratory and at any reference installation you use for demonstrating the accuracy of an alternative procedure.

§ 1090.1370 Qualifying criteria for reference installations.

(a) A reference installation refers to a laboratory that uses the referee procedure specified in § 1090.1360(d) to evaluate the accuracy of alternative procedures for method-defined parameters, by comparing measured values to

companion tests using one of the referee procedures in §1090.1360(d). This evaluation may result in an equation to correlate results between the two procedures. Once a laboratory qualifies as a reference installation, that qualification is valid for five years from the qualifying date, consistent with good laboratory practices.

(b) You may qualify a reference installation for VCSB procedures by participating in an interlaboratory crosscheck program with at least 16 separate measurements that are not identified as outliers. This presumes that the results for the candidate reference installation are not outliers.

(c) You may qualify a reference installation for VCSB or non-VCSB procedures based on the following measurement protocol:

(1) Use the precision testing procedure specified in §1090.1365(b) to show that your standard deviation for tests using the reference test method is at or below 0.3 times the reproducibility for a given fuel parameter.

(2) You must correlate your test results for a given fuel parameter against the accepted reference values from a monthly crosscheck program based on Section 6.2.2.1 and Note 7 of ASTM D6299 (incorporated by reference in §1090.95) as follows:

(i) If there are multiple fuels available from the crosscheck program, select the fuel that has the closest value to the standard. If there is no standard for a given fuel parameter, select the fuel with values for the fuel parameter that best represent typical values for fuels you test.

(ii) Measure the fuel parameter for the crosscheck fuel at your laboratory using the appropriate referee procedure. Calculate a mean value that includes all your repeat measurements.

(iii) Determine the mean value from the crosscheck program and calculate the difference between this value and the mean value from your testing. Express this difference as a certain number of standard deviations relative to the data set from the crosscheck program.

(iv) The calculated monthly difference between the mean values from §1090.1365(c)(3)(ii) for 5 consecutive months must fall within the central 50 percent of the distribution of data at least 3 times. The central 50 percent of the distribution corresponds to 0.68 standard deviations.

(v) Calculate the mean value of the differences from §1090.1365(c)(3)(ii) for all 5 months. This mean value must fall within the central 50 percent of the distribution of data from the crosscheck program. For example, if the difference was 0.5 standard deviations for two months, 0.6 for one month, and 0.7 for two months, the mean value of the difference is 0.6 standards deviations, and the reference installation meets the requirements of this paragraph.

(3) You must demonstrate that the reference installation is in statistical quality control for at least 5 months with the designated procedure as specified in ASTM D6299. If at any point the reference installation is not in statistical quality control, you must make any necessary changes and restart testing toward meeting the requirement to achieve statistical quality control for at least 5 months, except as follows:

(i) Do not consider measurements you perform as part of regular maintenance or recalibration for evaluating statistical quality control.

(ii) If you find that the reference installation is not in statistical quality control during an initial 5-month period and you are able to identify the problem and make the necessary changes to again achieve statistical quality control before the end of the 5-month demonstration period, you may consider the reference installation as meeting the requirement to be in statistical quality control for at least 5 months.

§1090.1375 Quality control procedures.

This section specifies ongoing quality testing requirements as part of the Performance-based Measurement System specified in §1090.1360.

(a) *General provisions.* You must perform testing to show that your laboratory meets specified precision and accuracy criteria as follows:

(1) The testing requirement applies for the referee procedures in §1090.1360(d) and for alternate procedures that are qualified or approved

under § 1090.1365. The testing requirements apply separately for each test instrument at each laboratory.

(2) If you fail to conduct specified testing, your test instrument is not qualified for measuring fuel parameters to demonstrate compliance with the standards and other specifications of this part until you perform this testing. Similarly, if your test instrument fails to meet the specified criteria, it is not qualified for measuring fuel parameters to demonstrate compliance with the standards and other specifications of this part until you make the necessary changes to your test instrument and perform testing to show that the test instrument again meets the specified criteria.

(3) If you perform major maintenance such as overhauling an instrument, confirm that the instrument still meets precision and accuracy criteria before you start testing again based on the procedures specified in ASTM D6299 (incorporated by reference in § 1090.95).

(4) Keep records to document your testing under this section for 5 years.

(b) *Precision demonstration.* Show that you meet precision criteria as follows:

(1) Meeting the precision criteria of this paragraph (b) qualifies your test instrument for performing up to 20 tests or 7 days, whichever is less. Include all tests except for testing to meet precision or accuracy requirements.

(2) Perform precision testing using the control-chart procedures in ASTM D6299. If you opt to use procedure 2A (Q-Procedure) or 2B (dynamically updated exponentially weighted moving average), validate the first run on the new QC batch by either an overlap in-control result of the old batch, or by a single execution of an accompanying standard reference material. The new QC material result would be considered validated if the single result of the standard reference material is within the established site precision (R') of the ARV of the standard reference material.

(3) Use I charts and MR charts as specified in ASTM D6299 to show that the standard deviation for the test instrument meets the precision criteria specified in § 1090.1365(b).

(c) *Accuracy demonstration.* For absolute fuel parameters (VCSB and non-VCSB) and for method-defined fuel parameters using non-VCSB methods, you must show that you meet accuracy criteria as specified in this paragraph (c). For method-defined VCSB procedures, you may meet accuracy requirements as specified in this paragraph (c) or by comparing your results to the accepted reference value in an inter-laboratory crosscheck program sponsored by ASTM International or another VCSB at least 3 times per year.

(1) Meeting the accuracy criteria of this paragraph (c) qualifies your test instrument for 130 days.

(2) Except as specified in paragraph (c)(3) of this section, test every instrument using a check standard meeting the specifications of ASTM D6299. Select a fuel sample with an ARV that is at or slightly below the standard that applies. If there are both average and batch standards, use the average standard. If there is no standard, select a fuel sample representing fuel that is typical for your testing.

(3) The following provisions apply for method-defined non-VCSB alternative procedures with high sensitivity to sample-specific bias:

(i) Procedures have high sensitivity if the closeness sum of squares (CSS) statistic exceeds the 95th percentile value, as specified in ASTM D6708 (incorporated by reference in § 1090.95).

(ii) Create a check standard from production fuel representing the fuel you will routinely analyze. Determine the ARV of your check standard using the protocol in ASTM D6299 at a reference installation as specified in § 1090.1370.

(iii) You must send EPA a fuel sample from every twentieth batch of gasoline or diesel fuel and identify the procedures and corresponding test results from your testing. EPA may return one of your samples to you for further testing; if this occurs, you must repeat your measurement and report your results within 180 days of receiving the fuel sample.

(4) You meet accuracy requirements under this section if the difference between your measured value for the check standard and the ARV is less

than the value from the following equation:

$$\Delta_{max} = 0.75 \cdot \mathrm{R} \cdot \sqrt{1 + \frac{1}{\mathrm{L}}}$$

Where:

Δ_{max} = Maximum allowable difference.

R = Reproducibility of the referee procedure identified in § 1090.1360(d), as noted in Table 1 to paragraph (b)(3) of § 1090.1365 or in the following table:

TABLE 1 TO PARAGRAPH (C)(4)—CRITERIA FOR QUALIFYING ALTERNATIVE PROCEDURES

Tested product	Referee procedure [1]	Reproducibility (R) [2]
ULSD, 500 ppm diesel fuel, ECA marine fuel, diesel fuel additive, gasoline, gasoline regulated blendstock, and gasoline additive.	ASTM D2622	$R = 0.4273 \cdot x^{0.8015}$
Butane	ASTM D6667	$R = 0.3130 \cdot x$

[1] ASTM specifications are incorporated by reference, see § 1090.95.
[2] Calculate reproducibility using the average value determined from testing. Use units as specified in § 1090.1350(c).

L = the total number of test results used to determine the ARV of a consensus-named fuel. For testing locally named fuels for which no consensus-based ARV applies, use L = ∞.

TESTING RELATED TO GASOLINE DEPOSIT CONTROL

§ 1090.1390 Requirement for Automated Detergent Blending Equipment Calibration.

(a) An automated detergent blending facility must calibrate their automated detergent blending equipment once in each calendar half-year, with the acceptable calibrations being no less than 120 days apart.

(b) Equipment recalibration is also required each time the detergent package is changed, unless written documentation indicates that the new detergent package has the same viscosity as the previous detergent package. Calibrating after changing the detergent package may be used to satisfy the semiannual recalibration requirement in paragraph (a) of this section, provided that the calibrations occur in the appropriate calendar half-year and are no less than 120 days apart.

§ 1090.1395 Gasoline deposit control test procedures.

A gasoline detergent manufacturer must perform testing using one of the methods specified in this section to establish the lowest additive concentration (LAC) for the detergent.

(a) *Top Tier-Based Test Method.* Use the procedures specified in ASTM D6201 (incorporated by reference in § 1090.95), as follows:

(1) Use a base fuel that conforms to the specifications for gasoline-alcohol blends in ASTM D4814 (incorporated by reference in § 1090.95). Blendstocks used to formulate the test fuel must be derived from conversion units downstream of distillation, with all processes representing normal fuel manufacturing facility operations. Blendstocks must not come from chemical grade streams. Butane and pentane may be added to adjust vapor pressure. The base fuel should include any nondetergent additives typical of commercially available fuel if they may positively or negatively affect deposit formation. In addition, the base fuel must have the following properties:

(i) 8.0–10.0 volume percent DFE that meets the requirements in § 1090.270 and conforms to the specifications of ASTM D4806 (incorporated by reference in § 1090.95).

(ii) At least 8.0 volume percent olefins.

(iii) At least 15 volume percent aromatics.

(iv) No more than 80 ppm sulfur.

(v) T90 distillation temperature at or above 143 °C.

(vi) No detergent-active substance. A base fuel with typical nondetergent additives, such as antioxidants, corrosion inhibitors, and metal deactivators, may be used.

(2) Perform the 100-hour test for intake valve deposits with the base fuel to demonstrate that the intake valves

accumulate at least 500 mg on average. If the test engine fails to accumulate enough deposits, make any necessary adjustments and repeat the test. This demonstration is valid for any further detergent testing with the same base fuel.

(3) Repeat the test on the same engine with a specific concentration of detergent added to the base fuel. If the test results in less than 50 mg average per intake valve, the tested detergent concentration is the LAC for the detergent.

(b) *CARB Test Method*. Use the procedures specified by CARB in Title 13, California Code of Regulations, section 2257 (incorporated by reference in § 1090.95).

(1) A detergent tested under this option or certified under 40 CFR 80.163(d) prior to January 21, 2021, may be used at the LAC specified for use in the state of California in any gasoline in the United States.

(2) The gasoline detergent manufacturer must cease selling a detergent immediately upon being notified by CARB that the CARB certification for this detergent has been invalidated and must notify EPA under 40 CFR 79.21.

(c) *EPA BMW method*. Use the procedures specified in ASTM D5500 (incorporated by reference in § 1090.95), as follows:

(1) Prepare the test fuel with the following specification:

(i) Sulfur—minimum 340 ppm.

(ii) T90—minimum 171 °C.

(iii) Olefins—minimum 11.4 volume percent.

(iv) Aromatics—minimum 31.1 volume percent.

(v) Ethanol—minimum 10 volume percent.

(vi) Sulfur, T90, olefins, and aromatics specifications must be met before adding ethanol.

(vii) Di-tert-butyl disulfide may be added to the test fuel.

(2) The duration of testing may be less than 10,000 miles. Measured deposits must meet the following specified values to qualify the test fuel and establish a detergent's LAC:

(i) Measured deposits for the fuel without detergent must be at least 290 mg per valve on average.

(ii) Measured deposits for the fuel with detergent must be less than 100 mg per valve on average.

(d) *Alternative test methods*. (1) An EPA-approved alternative test method may be used if the alternative test method can be correlated to any of the methods specified in paragraphs (a) through (c) of this section.

(2) Information describing the alternative test method and analysis demonstrating correlation must be submitted for EPA approval as specified in § 1090.10.

Subpart O—Survey Provisions

§ 1090.1400 General provisions.

(a) *Program plan approval process*. (1) A program plan that complies with the requirements in § 1090.1415 or § 1090.1450 must be submitted to EPA no later than October 15 of the year preceding the calendar year in which the program will be conducted.

(2) The program plan must be signed by an RCO of the independent surveyor conducting the program.

(3) The program plan must be submitted as specified in § 1090.10.

(4) EPA will send a letter to the party submitting the program plan that indicates whether EPA approves or disapproves the plan.

(b) *Independent surveyor contract*. (1) No later than December 15 of the year preceding the year in which the survey will be conducted, the contract with the independent surveyor must be in effect, and the amount of compensation necessary to carry out the entire survey plan must either be paid to the independent surveyor or placed into an escrow account with instructions to the escrow agent to remit the compensation to the independent surveyor during the course of the survey plan.

(2) No later than December 31 of the year preceding the year in which the survey will be conducted, EPA must receive a copy of the contract with the independent surveyor and proof that the compensation necessary to carry out the survey plan has either been paid to the independent surveyor or placed into an escrow account. If placed into an escrow account, a copy of the escrow agreement must be sent to EPA.

§ 1090.1405 National fuels survey program.

(a) *Program participation*. (1) A gasoline manufacturer that elects to account for oxygenate added downstream under § 1090.710 must participate in the national fuels survey program (NFSP) specified in this paragraph (b) of this section.

(2) A party required to participate in an E15 survey under § 1090.1420(a) must participate in the NFSP specified in paragraph (b) of this section or a survey program approved by EPA under § 1090.1420(b) or (c).

(3) Other parties may elect to participate in the NFSP for purposes of establishing an affirmative defense against violations of requirements and provisions under this part as specified in § 1090.1720.

(b) *Program requirements*. The NFSP must meet all the following requirements:

(1) The survey program must be planned and conducted by an independent surveyor that meets the independence requirements in § 1090.55 and the requirements specified in § 1090.1410.

(2) The survey program must be conducted by collecting samples representative of gasoline and diesel retail outlets in the United States as specified in § 1090.1415.

§ 1090.1410 Independent surveyor requirements.

The independent surveyor conducting the NFSP must meet all the following requirements:

(a) Submit a proposed survey program plan under § 1090.1415 to EPA for approval for each calendar year.

(b)(1) Obtain samples representative of the gasoline and diesel fuel (including diesel fuel made available at retail to nonroad vehicles, engines, and equipment) offered for sale separately from all gasoline and diesel retail outlets in accordance with the survey program plan approved by EPA, or immediately notify EPA of any refusal of a retailer to allow samples to be taken.

(2) Obtain the number of samples representative of the number of gasoline retail outlets offering E15.

(3) Collect samples of gasoline produced at blender pump using ''method 1'' specified in NIST Handbook 158 (incorporated by reference, see § 1090.95). All other samples of gasoline and diesel fuel must be collected using the methods specified in subpart N of this part.

(4) Samples must be shipped via ground service to an EPA-approved laboratory within 2 business days of being collected.

(c) Test, or arrange to be tested, the collected samples, as follows:

(1) Gasoline samples must be analyzed for oxygenate content, sulfur content, and benzene content. Gasoline samples collected from June 1 through September 15 must also be analyzed for RVP.

(2) A subset of gasoline samples, as determined under § 1090.1415(e)(3), must also be analyzed for aromatics content, olefins content, and distillation parameters.

(3) Diesel samples must be analyzed for sulfur content.

(4) All samples must be tested by an EPA-approved laboratory using the test methods specified in subpart N of this part.

(5) All testing must be completed by the EPA-approved laboratory within 10 business days after receipt of the sample.

(d) Verify E15 labeling requirements at gasoline retail outlets that offer E15 for sale.

(e) Using procedures specified in an EPA-approved plan under § 1090.1415, notify EPA, the retailer, and the branded fuel manufacturer (if applicable) within 24 hours after the EPA-approved laboratory has completed analysis when any of the following occur:

(1) A test result for a gasoline sample yields a sulfur content result that exceeds the downstream sulfur per-gallon standard in § 1090.205(c).

(2) A test result for a gasoline sample yields an RVP result that exceeds the applicable RVP standard in § 1090.215.

(3) A test result for a diesel sample yields a sulfur content result that exceeds the sulfur standard in § 1090.305(b).

(4) A test result for a gasoline sample identified as ''E15'' yields an ethanol content result that exceeds 15 volume percent.

(5) A test result for a gasoline sample not identified as ''E15'' yields an ethanol content of more than 10 volume percent ethanol.

(f) Provide quarterly and annual summary reports that include the information specified in §1090.925(b) and (c), respectively.

(g) Keep records related to the NFSP as specified in §1090.1245(b)(1).

(h) Submit contracts to EPA as specified in §1090.1400(b).

(i) Permit any representative of EPA to monitor at any time the conducting of the survey, including sample collection, transportation, storage, and analysis.

§ 1090.1415 Survey program plan design requirements.

The survey program plan must include all the following:

(a) *Number of surveys.* The survey program plan must include 4 surveys each calendar year that occur during the following time periods:

(1) One survey during the period of January 1 through March 31.

(2) One survey during the period of April 1 through June 30.

(3) One survey during the period of July 1 through September 30.

(4) One survey during the period of October 1 through December 31.

(b) *Sampling areas.* The survey program plan must include sampling in all sampling strata during each survey. These sampling strata must be further divided into discrete sampling areas or clusters. Each survey must include sampling in at least 40 sampling areas in each stratum that are randomly selected.

(c) *No advance notice of surveys.* The survey program plan must include procedures to keep the identification of the sampling areas that are included in the plan confidential from any participating party prior to the beginning of a survey in an area. However, this information must not be kept confidential from EPA.

(d) *Gasoline and diesel retail outlet selection.* (1) Gasoline and diesel retail outlets to be sampled in a sampling area must be selected from among all gasoline retail outlets in the United States that sell gasoline with the probability of selection proportionate to the volume of gasoline sold at the retail outlet. The sample of retail outlets must also include gasoline retail outlets with different brand names as well as those gasoline retail outlets that are unbranded.

(2) For any gasoline or diesel retail outlet from which a sample of gasoline or diesel was collected during a survey and was reported to EPA under §1090.1410(e), that gasoline or diesel retail outlet must be included in the subsequent survey.

(3) At least one sample of a product dispensed as E15 must be collected at each gasoline retail outlet when E15 is present, and separate samples must be taken that represent the gasoline contained in each storage tank at the gasoline retail outlet unless collection of separate samples is not practicable.

(4) At least one sample of a product dispensed as diesel fuel must be collected at each diesel fuel retail outlet when diesel fuel is present. Samples of diesel fuel may be collected at retail outlets that sell gasoline.

(e) *Number of samples.* (1) The number of retail outlets to be sampled must be independently calculated for the total number of gasoline retail outlets and the total number of diesel fuel retail outlets. The same retail outlet may represent both a gasoline retail outlet and a diesel fuel retail outlet for purposes of determining the number of samples.

(2) The minimum number of samples to be included in the survey program plan for each calendar year is calculated as follows:

$$n = \left\{ \frac{\left(Z_\alpha + Z_\beta\right)^2}{4 \cdot \left(\arcsin\left(\sqrt{\varphi_1}\right) - \arcsin\left(\sqrt{\varphi_0}\right)\right)^2} \right\} \cdot F_a \cdot F_b \cdot Su_n \cdot St_n$$

Where:

n = Minimum number of samples in a year-long survey series. However, n must be greater than or equal to 2,000 for the number of diesel samples or 5,000 for the number of gasoline samples.

$Z\alpha$ = Upper percentile point from the normal distribution to achieve a one-tailed 95% confidence level (5% α-level). For purposes of this survey program, $Z\alpha$ equals 1.645.

$Z\beta$ = Upper percentile point to achieve 95% power. For purposes of this survey program, $Z\beta$ equals 1.645.

ϕ_1 = The maximum proportion of non-compliant outlets for a region to be deemed compliant. This parameter needs to be 5% or greater (*i.e.*, 5% or more of the outlets, within a stratum such that the region is considered non-compliant).

ϕ_0 = The underlying proportion of non-compliant outlets in a sample. For the first survey program plan, ϕ_0 will be 2.3%. For subsequent survey program plans, ϕ_0 will be the average of the proportion of outlets found to be non-compliant over the previous 4 surveys.

F_a = Adjustment factor for the number of extra samples required to compensate for samples that could not be included in the survey (*e.g.*, due to technical or logistical considerations), based on the number of additional samples required during the previous 4 surveys. F_a must be greater than or equal to 1.1.

F_b = Adjustment factor for the number of samples required to resample each retail outlet with test results reported to EPA under §1090.1410(e), based on the rate of resampling required during the previous 4 surveys. F_b must be greater than or equal to 1.1.

Su_n = Number of surveys per year. For purposes of this survey program, Su_n equals 4.

St_n = Number of sampling strata. For purposes of this survey program, St_n equals 3.

(3) The number of gasoline samples that also need to be tested for aromatics, olefins, and distillation parameters under §1090.1410(c)(2) must be calculated using the methodology specified in paragraph (e)(2) of this section without the F_a, F_b, and Su_n parameters.

(4) The number of samples determined under paragraphs (e)(2) and (3) of this section must be distributed approximately equally among the 4 surveys conducted during the calendar year.

(f) *Laboratory designation*. Any laboratory that the independent surveyor intends to use to test samples collected as part of the NFSP must be approved annually as part of the survey program plan approval process in §1090.1400(a). In the survey program plan submitted to EPA, the independent surveyor must include the following information regarding any laboratory they intend to use to test samples:

(1) The name of the laboratory.

(2) The address of the laboratory.

(3) The test methods for each fuel parameter measured at the laboratory.

(4) Reports demonstrating the laboratory's performance in a laboratory crosscheck program for the most recent 12 months prior to submission of the survey program plan.

(g) *Submission*. Survey program plans submitted under this section must be approved annually under §1090.1400(a).

§1090.1420 Additional requirements for E15 misfueling mitigation surveying.

(a) *E15 misfueling mitigation survey requirement*. (1) Any gasoline manufacturer, oxygenate blender, or oxygenate producer that produces, introduces into commerce, sells, or offers for sale E15, gasoline, BOB, DFE, or gasoline-ethanol blended fuel that is intended for use in or as E15 must comply with either survey program Option 1 (as specified in paragraph (b) of this section) or Option 2 (as specified in paragraph (c) of this section).

(2) For an oxygenate producer that produces or imports DFE, the DFE is deemed as intended for use in E15 unless the oxygenate producer demonstrates that it was not intended for such use. The oxygenate producer may demonstrate, at a minimum, that DFE is not intended for use in E15 by including language on PTDs stating that the DFE is not intended for use in E15, entering into contracts with oxygenate blenders to limit the use of their DFE to gasoline-ethanol blended fuels of no more than 10 volume percent, and limiting the concentration of their DFE to no more than 10 volume percent in their fuel additive registration under 40 CFR part 79.

(b) *Survey Option 1*. The gasoline manufacturer, oxygenate blender, or oxygenate producer must properly conduct a survey program in accordance with a survey program plan that has

been approved by EPA in all areas that may be reasonably expected to be supplied with their gasoline, BOB, DFE, or gasoline-ethanol blended fuel. Such approval must be based on a survey program plan that meets all the following requirements:

(1) The survey program must consist of at least quarterly surveys that occur during the following time periods in every year during which the gasoline manufacturer, oxygenate blender, or oxygenate producer introduces E15 into commerce:

(i) One survey during the period of January 1 through March 31.

(ii) One survey during the period of April 1 through June 30.

(iii) One survey during the period of July 1 through September 30.

(iv) One survey during the period of October 1 through December 31.

(2) The survey program plan must meet all the requirements of this subpart, except for §§ 1090.1405(a) and (b)(2), 1090.1410(c)(2) and (3), and 1090.1415(b), (d)(1), (2), and (4), and (e). In lieu of meeting these sections, the survey program plan must specify the sampling strata, clusters, and area(s) to be surveyed, and the number of samples to be included in the survey.

(c) *Survey Option 2.* The gasoline manufacturer, oxygenate blender, or oxygenate producer must participate in the NFSP under § 1090.1405.

§ 1090.1450 National sampling and testing oversight program.

(a) *Program participation.* (1) Except for a gasoline manufacturer that has an approved in-line blending waiver under § 1090.1315 that covers all gasoline produced at their facility, a gasoline manufacturer that elects to account for oxygenate added downstream under § 1090.710 must participate in the national sampling and testing oversight program (NSTOP) in this section.

(2) Other gasoline manufacturers may elect to participate in the NSTOP for purposes of establishing an affirmative defense to a violation under § 1090.1720. A gasoline manufacturer that has an approved in-line blending waiver under § 1090.1315 does not need to participate in the NSTOP in order to establish an affirmative defense to a violation under § 1090.1720.

(3) A gasoline manufacturer that elects to participate in the NSTOP must test, or arrange to be tested, samples collected from their gasoline manufacturing facilities as specified in paragraph (c)(2) of this section and report results to the independent surveyor within 10 business days of the date that the sample was collected.

(b) *Program requirements.* The NSTOP must meet all the following requirements:

(1) The NSTOP must be planned and conducted by an independent surveyor that meets the independence requirements in § 1090.55 and the requirements of paragraph (c) of this section.

(2) The NSTOP must be conducted at each gasoline manufacturing facility from all participating gasoline manufacturers.

(c) *Independent surveyor requirements.* The independent surveyor conducting the NSTOP must meet all the following requirements:

(1) Submit a proposed NSTOP plan that meets the requirements of paragraph (d) of this section to EPA for approval each calendar year.

(2)(i) Obtain at least one sample representing summer gasoline and one sample representing winter gasoline for each participating gasoline manufacturing facility. If the fuel manufacturer only produces fuel during either the summer or winter season, obtain at least one sample during the season that the fuel manufacturer produces fuel.

(ii)(A) Observe the gasoline manufacturer collect at least one sample representing each gasoline required under paragraph (c)(2)(i) of this section for each participating gasoline manufacturing facility and evaluate whether the gasoline manufacturer collected representative sample(s) in accordance with applicable sampling procedures specified in § 1090.1335. Immediately notify EPA and the gasoline manufacturer if the applicable sampling procedures are not followed.

(B) The independent surveyor must also obtain a portion of the sample collected by the gasoline manufacturer and ship the sample as specified in paragraph (c)(2)(v) of this section.

(C) The observed sample does not need to represent a batch of certified

gasoline (*i.e.*, the independent surveyor may observe the collection of a simulated sample if the gasoline manufacturer does not have a batch of certified gasoline available).

(iii) The independent surveyor must immediately notify EPA of any refusal of a gasoline manufacturer to allow samples to be taken. A gasoline manufacturer that refuses to allow the independent surveyor to take portions of collected samples is no longer considered by EPA to be participating in the NSTOP and must not account for oxygenate added downstream under § 1090.710.

(iv) Samples must be retained by the independent surveyor as specified in § 1090.1345(a)(1).

(v) Samples collected must be shipped via ground service within 2 business days from when the samples are collected to an EPA-approved laboratory as established in an approved plan under this section. A random subset of collected samples must also be shipped to the EPA National Vehicle and Fuel Emissions Laboratory as established in an approved plan under this section.

(3) Test, or arrange to be tested, samples collected under paragraph (c)(2) of this section as follows:

(i) Winter gasoline samples must be analyzed for oxygenate content, sulfur content, benzene content, distillation parameters, aromatics, and olefins.

(ii) Summer gasoline samples must be analyzed for oxygenate content, sulfur content, benzene content, distillation parameters, aromatics, olefins, and RVP.

(iii) All samples must be tested by an EPA-approved laboratory using test methods specified in subpart N of this part.

(iv) All analyses must be completed by the EPA-approved laboratory within 10 business days after receipt of the sample.

(v) A gasoline manufacturer must analyze gasoline samples for sulfur content, benzene content, and for summer gasoline, RVP.

(4) Using procedures specified in the EPA-approved plan under this section, notify EPA and the gasoline manufacturer within 24 hours after the EPA-approved laboratory has completed analysis when any of the following occur:

(i) A test result for a gasoline sample yields a sulfur content that exceeds the fuel manufacturing facility gate sulfur per-gallon standard in § 1090.205(b).

(ii) A test result for a gasoline sample yields an RVP that exceeds the applicable RVP standard in § 1090.215.

(5) Make the test results available to EPA and the gasoline manufacturer for all analyses specified in paragraph (c)(3) of this section within 5 business days of completion of the analysis.

(6) Compare test results of all samples collected under paragraph (c)(2) of this section and all test results obtained from the gasoline manufacturer from the same samples as specified in paragraph (a)(3) of this section and notify EPA and the gasoline manufacturer if the test result for any parameter tested under paragraph (c)(3) of this section is greater than the reproducibility of the applicable method specified in subpart N of this part.

(7) Provide quarterly reports to EPA that include the information specified in § 1090.925(d).

(8) Keep records related to the NSTOP as specified in § 1090.1245(b)(3).

(9) Submit contracts to EPA as specified in § 1090.1400(b).

(10) Review the test performance index and precision ratio for each method and instrument the laboratory used to test the gasoline samples collected under this section as follows:

(i) For each test method and instrument, the surveyor must obtain the relevant records from the gasoline manufacturer to determine the site precision, either from an inter-laboratory crosscheck program or from ASTM D6299 (incorporated by reference in § 1090.95).

(ii) Using relevant information obtained from the gasoline manufacturers, the surveyor must determine the appropriate Test Performance Index (TPI) and Precision Ratio (PR) from Table 2 Guidelines for Action Based on TPI in ASTM D6792 (incorporated by reference in § 1090.95).

(iii) A gasoline manufacturer must supply copies of the necessary information to the independent surveyor to review the TPI and PR for each method

and instrument used to test the gasoline samples collected under this section.

(11) Permit any representative of EPA to monitor at any time the conducting of the NSTOP, including sample collection, transportation, storage, and analysis.

(d) *NSTOP plan requirements.* The NSTOP plan specified in paragraph (c)(1) of this section must include, at a minimum, all the following:

(1) *Advance notice of sampling.* The NSTOP plan must include procedures on how to keep the identification of the gasoline manufacturing facilities included in the NSTOP plan confidential with minimal advanced notification from any participating gasoline manufacturer prior to collecting a sample. However, this information must not be kept confidential from EPA.

(2) *Gasoline manufacturing facility selection.* (i) Each participating gasoline manufacturing facility must be sampled at least once during each season they produce fuel. The plan must demonstrate how these facilities will be randomly selected within the summer and winter seasons.

(ii) In addition to the summer and winter season samples collected at each participating gasoline manufacturing facility, additional oversight samples are required under paragraph (d)(3)(ii) of this section. The independent surveyor must identify how these samples will be randomly distributed among participating gasoline manufacturing facilities.

(3) *Number of samples.* (i) The number of gasoline manufacturing facilities to be sampled must be calculated for the total number of samples to be collected for the next calendar year as part of the NSTOP plan.

(ii) The minimum number of samples to be included in the NSTOP plan for each calendar year is calculated as follows:

$$n = R * F_a * F_b * Su_n$$

Where:

n = Minimum number of samples in a year.

R = The number of participating gasoline manufacturing facilities.

F_a = Adjustment factor for the number of extra samples required to compensate for samples that could not be included in the NSTOP (*e.g.*, due to technical or logistical considerations), based on the number of additional samples required during the previous 2 calendar years. F_a must be greater than or equal to 1.1.

F_b = Adjustment factor for the number of samples required to ensure oversight. For purposes of this program, F_b equals 1.25.

Su_n = Number of samples required per participating facility per year. For purposes of this program, Su_n equals 2.

(4) *Laboratory designation.* Any laboratory that the independent surveyor intends to use to test samples collected as part of the NSTOP must be approved annually as part of the program plan approval process in § 1090.1400(a). The independent surveyor must include the following information regarding each laboratory it intends to use to test samples:

(i) The name of the laboratory.

(ii) The address of the laboratory.

(iii) The test methods for each fuel parameter measured at the laboratory.

(iv) Records demonstrating the laboratory's performance in a laboratory crosscheck program for the most recent 12 months prior to submission of the plan.

(5) *Sampling procedure.* The plan must include a detailed description of the sampling procedures used to collect samples at participating gasoline manufacturing facilities.

(6) *Notification of test results.* The NSTOP plan must include a description of how the independent surveyor will notify EPA and gasoline manufacturers of test results under paragraph (c)(4) of this section.

(7) *Submission.* NSTOP plans submitted under this section must be approved annually under § 1090.1400(a).

Subpart P—Retailer and Wholesale Purchaser-Consumer Provisions

§ 1090.1500 Overview.

(a) A retailer or WPC must comply with the labeling requirements in §§ 1090.1510 and 1090.1515, as applicable, and the refueling hardware requirements in §§ 1090.1550 through 1090.1565, as applicable.

(b) An alternative label design to those specified in this subpart may be used if the design is approved by EPA

prior to use and meets all the following requirements:

(1) The alternative label must be similar in substance and appearance to the EPA-required label.

(2) The alternative label must contain the same informational elements as the EPA-required label.

(3) The alternative label must be submitted as specified in § 1090.10.

LABELING

§ 1090.1510 E15 labeling provisions.

Any retailer or WPC dispensing E15 must apply a label to the fuel dispenser as follows:

(a) Position the label to clearly identify which control the consumer will use to select E15. If the dispenser is set up to dispense E15 without the consumer taking action to select the fuel, position the label on a vertical surface in a prominent place, approximately at eye level.

(b) Figure 1 of this paragraph shows the required content and formatting. Use black letters on an orange background for the lower portion and the diagonal ''Attention'' field and use orange letters on a black background for the rest of the upper portion. Font size is shown in Figure 1. Set vertical position and line spacing as appropriate for each field. Dimensions are nominal values.

Figure 1 to paragraph (b)—E15 Label

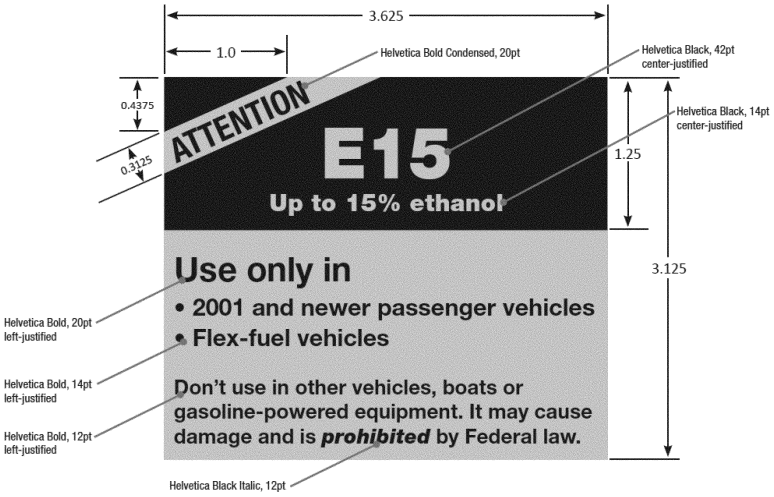

§ 1090.1515 Diesel sulfur labeling provisions.

A retailer or WPC dispensing heating oil, 500 ppm LM diesel fuel, or ECA marine fuel must apply labels to fuel dispensers as follows:

(a) Labels must be in a prominent location where the consumer will select or dispense either the corresponding fuel or heating oil. The label content must be in block letters of no less than 24-point bold type, printed in a color contrasting with the background.

(b) Labels must include the following statements, or equivalent alternative statements approved by EPA:

(1) For dispensing heating oil along with any kind of diesel fuel for any kind of engine, vehicle, or equipment, apply the following label:

Heating Oil

Warning

Federal law prohibits use in highway vehicles or engines, or in nonroad, locomotive, or marine diesel engines.

Its use may damage these diesel engines.

(2) For dispensing 500 ppm LM diesel fuel, apply the following label:

Locomotive and Marine Diesel Fuel (500 ppm Sulfur Maximum)

Warning

Federal law prohibits use in nonroad engines or in highway vehicles or engines.

(3) For dispensing ECA marine fuel, apply the following label:

ECA Marine Fuel (1,000 ppm Sulfur Maximum)

For use in Category 3 (C3) marine vessels only.

Warning

Federal law prohibits use in any engine that is not installed in a C3 marine vessel; use of fuel oil with a sulfur content greater than 1,000 ppm in an ECA is prohibited except as allowed by 40 CFR part 1043.

Note: If a pump dispensing 500 ppm LM diesel fuel is labeled with the ''LOW SULFUR LOCOMOTIVE AND MARINE DIESEL FUEL (500 ppm Sulfur Maximum)'' label, the retailer or WPC does not need to replace this label.

REFUELING HARDWARE

§ 1090.1550 Requirements for gasoline dispensing nozzles used with motor vehicles.

(a) The following refueling hardware specifications apply for any nozzle installation used for dispensing gasoline into motor vehicles:

(1) The outside diameter of the terminal end must not be greater than 21.3 mm.

(2) The terminal end must have a straight section of at least 63 mm.

(3) The retaining spring must terminate at least 76 mm from the terminal end.

(b) For nozzles that dispense gasoline into motor vehicles, the dispensing flow rate must not exceed a maximum value of 10 gallons per minute. The flow rate may be controlled through any means in the pump/dispenser system, as long as it does not exceed the specified maximum value. Any dispensing pump dedicated to heavy-duty vehicles or airplanes is exempt from this flow-rate requirement.

§ 1090.1555 Requirements for gasoline dispensing nozzles used primarily with marine vessels.

The refueling hardware specifications of this section apply for any nozzle installation used primarily for dispensing gasoline into marine vessels. Note that nozzles meeting these specifications also meet the specifications of § 1090.1550(a).

(a) The outside diameter of the terminal end must have a diameter of 20.93 ± 00.43 mm.

(b) The spout must include an aspirator hole for automatic shutoff positioned with a center that is 17.0 ± 01.3 mm from the terminal end of the spout.

(c) The terminal end must have a straight section of at least 63.4 mm with no holes or grooves other than the aspirator hole.

(d) The retaining spring (if applicable) must terminate at least 76 mm from the terminal end.

§ 1090.1560 Requirements related to dispensing natural gas.

(a) Except for pumps dedicated to heavy-duty vehicles, any pump installation used for dispensing natural gas into motor vehicles must have a nozzle and hose configuration that vents no more than 1.2 grams of natural gas during a complete refueling event for a vehicle that meets the requirements of 40 CFR 86.1813–17(f)(1).

(b) Determine the amount of natural gas vented using calculations based on the geometric shape of the nozzle and hose.

§ 1090.1565 Requirements related to dispensing liquefied petroleum gas.

(a) Except for pumps dedicated to heavy-duty vehicles, any pump installation used for dispensing liquefied petroleum gas into motor vehicles must have a nozzle that has no greater than 2.0 cm^3 dead space from which liquefied petroleum gas will be released when the nozzle disconnects from the vehicle.

(b) Determine the volume of the nozzle cavity using calculations based on the geometric shape of the nozzle, with an assumed flat surface where the nozzle face seals against the vehicle.

Subpart Q—Importer and Exporter Provisions

§ 1090.1600 General provisions for importers.

(a) This subpart contains provisions that apply to any person who imports fuel, fuel additive, or regulated blendstock.

(b)(1) Except as specified in paragraph (b)(2) of this section, all applicable gasoline and diesel standards in subparts C and D of this part apply to imported gasoline and diesel.

(2) A gasoline importer that imports gasoline at multiple import facilities must comply with the gasoline average standards in §§ 1090.205(a) and 1090.210(a) as specified in § 1090.705(b), unless the importer complies with the provisions of § 1090.1610 to meet the alternative per-gallon standards for rail and truck imports specified in §§ 1090.205(d) and 1090.210(c).

(c) An importer must separately comply with any applicable certification or other requirements for U.S. Customs.

(d) Alternative testing requirements for an importer that imports gasoline or diesel fuel by rail or truck are specified in § 1090.1610.

§ 1090.1605 Importation by marine vessel.

An importer that imports fuel, fuel additive, or regulated blendstock using a marine vessel must comply with the requirements of this section.

(a) The importer must certify each fuel, fuel additive, or regulated blendstock imported at each port, unless the fuel is certified at the first port of entry in the United States and then transported by the same vessel to subsequent ports without picking up additional fuel.

(b) Except as specified in paragraph (d) of this section, the importer must certify each fuel, fuel additive, or regulated blendstock while it is on-board the vessel used to transport it to the United States. Certification sampling must be performed after the vessel's arrival at the port where the fuel, fuel additive, or regulated blendstock will be offloaded.

(1) The importer must sample each compartment of the vessel and use one of the following methods to meet testing requirements:

(i) Treat each compartment as a separate batch.

(ii) Combine samples from separate compartments into a single, vessel volumetric composite sample using the procedures in Section 9.2.4 of ASTM D4057 (incorporated by reference in § 1090.95). Test results from the composite sample are valid only after samples are collected from each affected compartment and homogeneity is demonstrated for all samples as specified in § 1090.1337.

(2) The importer must ensure that all applicable per-gallon standards are met before offloading the fuel, fuel additive, or regulated blendstock.

(3) The importer must not rely on testing conducted by a foreign supplier.

(c) Once the fuel, fuel additive, or regulated blendstock on a vessel has been certified under paragraph (b) of this section, it may be transferred to shore tanks using smaller vessels or barges (lightered) as a certified fuel, fuel additive, or regulated blendstock. These lightering transfers may be to terminals located in any harbor and are not restricted to terminals located in the harbor where the vessel is anchored. For example, certified gasoline could be transferred from an import vessel anchored in New York harbor to a lightering vessel and transported to Albany, New York or Providence, Rhode Island without separately certifying the gasoline upon arrival in Albany or Providence. In this lightering scenario, transfers of certified gasoline

to a lightering vessel must be accompanied by PTDs that meet the requirements of subpart L of this part.

(d) As an alternative to paragraphs (b) and (c) of this section, the importer may offload fuel, fuel additive, or regulated blendstock into shore tanks that contain the same fuel, fuel additive, or regulated blendstock if the importer meets the following requirements:

(1) For gasoline, the importer must offload gasoline into one or more empty shore tanks or tanks containing PCG that the importer owns.

(i) If the importer offloads gasoline into one or more empty shore tanks, they must sample and test the sulfur content and benzene content, and for summer gasoline, RVP, of each shore tank into which the gasoline was offloaded.

(ii) If the importer offloads gasoline into one or more shore tanks containing PCG, they must sample the PCG already in the shore tank prior to offloading gasoline from the marine vessel, test the sulfur content and benzene content, and report this PCG as a negative batch as specified in § 1090.905(c)(3)(i). After offloading the gasoline into the shore tanks, the importer must sample and test the sulfur content, benzene content, and for summer gasoline, RVP, of each shore tank into which the gasoline was offloaded and report the volume, sulfur content, and benzene content as a positive batch.

(iii) Include the PCG in the shore tank before offloading and the volume and properties after offloading in compliance calculations as specified in § 1090.700(d)(4)(i).

(iv) The sample retention requirements in § 1090.1345 apply to the samples taken prior to offloading and those taken after offloading.

(2) For all other fuel, fuel additive, or regulated blendstock, the importer must sample and test the fuel, fuel additive, or regulated blendstock in each shore tank into which it was offloaded. The importer must ensure that all applicable per-gallon standards are met before the fuel, fuel additive, or regulated blendstock is shipped from the shore tank.

§ 1090.1610 Importation by rail or truck.

(a) An importer that imports fuel, fuel additive, or regulated blendstock by rail or truck must meet the sampling and testing requirements of subpart N of this part by sampling and testing each compartment of the truck or railcar unless they do one of the following:

(1) *Use supplier results.* The importer may rely on test results from the supplier for fuel, fuel additive, or regulated blendstock imported by rail or truck if the importer meets all the following requirements:

(i) The importer obtains documentation of test results from the supplier for each batch of fuel, fuel additive, or regulated blendstock in accordance with the following requirements:

(A) The testing includes measurements for all the fuel parameters specified in § 1090.1310 using the measurement procedures specified in § 1090.1350.

(B) Testing for a given batch occurs after the most recent delivery into the supplier's storage tank and before transferring the fuel, fuel additive, or regulated blendstock to the railcar or truck.

(ii) The importer conducts testing to verify test results from each supplier as follows:

(A) Collect a sample at least once every 30 days or every 50 rail or truckloads from a given supplier, whichever is more frequent. Test the sample as specified in paragraphs (a)(1)(i)(A) and (B) of this section.

(B) Treat importation of each fuel, fuel additive, or regulated blendstock separately, but treat railcars and truckloads together if the fuel, fuel additive, or regulated blendstock is imported from a given supplier by rail and truck.

(2) *Certify in a storage tank.* The importer may transfer the fuel, fuel additive, or regulated blendstock imported by rail or truck into storage tanks that also contain the same product if the importer meets the following requirements:

(i) For gasoline, the importer transfers gasoline into one or more empty tanks or tanks containing PCG that the importer owns.

(A) If the importer transfers gasoline into one or more empty tanks, they must sample and test the sulfur content, benzene content, and for summer gasoline, RVP, of each tank into which the gasoline was transferred.

(B) If the importer transfers gasoline into one or more tanks containing PCG, they must sample the PCG already in the tank prior to transferring gasoline from the truck or train, test the sulfur content and benzene content, and report this PCG as a negative batch as specified in § 1090.905(c)(3)(i). After transferring the gasoline into the tanks, the importer must sample and test the sulfur content, benzene content, and for summer gasoline, RVP, of each tank into which the gasoline was transferred and report the volume, sulfur content, and benzene content as a positive batch.

(C) Include the PCG in the tank before transferring and the volume and properties after transferring in compliance calculations as specified in § 1090.700(d)(4)(i).

(D) The sample retention requirements in § 1090.1345 apply to the samples taken prior to transferring and those taken after transferring.

(ii) For all other fuel, fuel additive, or regulated blendstock, the importer must sample and test the fuel, fuel additive, or regulated blendstock in each tank into which it was transferred. The importer must ensure that all applicable per-gallon standards are met before the fuel, fuel additive, or regulated blendstock is shipped from the tank.

(b) If an importer that elects to comply with paragraph (a)(1) or (2) of this section fails to meet the applicable requirements, they must meet the sampling and testing requirements of subpart N of this part for each compartment of the truck or railcar until EPA determines that the importer has adequately addressed the cause of the failure.

§ 1090.1615 Gasoline treated as a blendstock.

(a) An importer may exclude GTAB from their compliance calculations if they meet all the following requirements:

(1) The importer reports the GTAB to EPA under § 1090.905(c)(7).

(2) The GTAB is treated as blendstock at a related gasoline manufacturing facility that produces gasoline using the GTAB.

(3) The related gasoline manufacturing facility must report the gasoline produced using the GTAB and must include the gasoline produced using the GTAB in their compliance calculations.

(b) After importation, the title of the GTAB must not be transferred to another party until the GTAB has been either certified as gasoline under subpart K of this part or used to produce gasoline that meets all applicable standards and requirements under this part.

(c) The facility at which the GTAB is used to produce gasoline must be physically located at either the same terminal at which the GTAB first arrives in the United States, the import facility, or at a facility to which the GTAB is directly transported from the import facility.

(d)(1) The importer must treat the GTAB as if it were imported gasoline and complete all requirements for a gasoline manufacturer under § 1090.105(a) (except for the sampling, testing, and sample retention requirements in § 1090.105(a)(6)) for the GTAB at the time it is imported.

(2) Any GTAB that ultimately is not used to produce gasoline (*e.g.*, a tank bottom of GTAB) must be treated as newly imported gasoline and must meet all applicable requirements for imported gasoline.

§ 1090.1650 General provisions for exporters.

Except as specified in this section and in subpart G of this part, fuel produced, imported, distributed, or offered for sale in the United States is subject to the standards and requirements of this part.

(a) Fuel designated for export by a fuel manufacturer is not subject to the standards in this part, provided all the requirements in § 1090.645 are met.

(b) Fuel not designated for export may be exported without restriction. However, the fuel remains subject to the provisions of this part while in the

United States. For example, fuel designated as ULSD must meet the applicable sulfur standards under this part even if it will later be exported.

(c) Fuel that has been classified as American Goods Returned to the United States by the U.S. Customs Service under 19 CFR part 10 is not considered to be imported for purposes of this part, provided all the following requirements are met:

(1) The fuel was produced at a fuel manufacturing facility located within the United States and has not been mixed with fuel produced at a fuel manufacturing facility located outside the United States.

(2) The fuel must be included in compliance calculations by the producing fuel manufacturer.

(3) All the fuel that was exported must ultimately be classified as American Goods Returned to the United States and none may be used in a foreign country.

(4) No fuel classified as American Goods Returned to the United States may be combined with any fuel produced at a foreign fuel manufacturing facility prior to reentry into the United States.

Subpart R—Compliance and Enforcement Provisions

§ 1090.1700 Prohibited acts.

(a) No person may violate any prohibited act in this part or fail to meet a requirement that applies to that person under this part.

(b) No person may cause another person to commit an act in violation of this part.

§ 1090.1705 Evidence related to violations.

(a)(1) EPA may use results from any testing required under this part to determine whether a given fuel, fuel additive, or regulated blendstock meets any applicable standard. However, EPA may also use any other evidence or information to make this determination if the evidence or information supports the conclusion that the fuel, fuel additive, or regulated blendstock would fail to meet one or more of the parameter specifications in this part if the appropriate sampling and testing methodology had been correctly performed. Examples of other relevant information include business records, commercial documents, and measurements with alternative procedures.

(2) Testing to determine noncompliance with this part may occur at any location and be performed by any party.

(b) Determinations of compliance with the requirements of this part other than the fuel, fuel additive, or regulated blendstock standards, and determinations of liability for any violation of this part, may be based on information from any source or location. Such information may include, but is not limited to, business records and commercial documents.

§ 1090.1710 Penalties.

(a) Any person liable for a violation under this part is subject to civil penalties as specified in 42 U.S.C. 7524 and 7545 for each day of such violation and the amount of economic benefit or savings resulting from the violation.

(b)(1) Any person liable for the violation of an average standard under this part is subject to a separate day of violation for each day in the compliance period.

(2) Any person liable under this part for a failure to fulfill any requirement for credit generation, transfer, use, banking, or deficit correction is subject to a separate day of violation for each day in any compliance period in which invalid credits are generated, transferred, used, or made available for use.

(c)(1) Any person liable under this part for a violation of a per-gallon standard, or for causing another party to violate a per-gallon standard, is subject to a separate day of violation for each day the non-complying fuel, fuel additive, or regulated blendstock remains any place in the distribution system.

(2) For the purposes of paragraph (c)(1) of this section, the length of time the fuel, fuel additive, or regulated blendstock that violates a per-gallon standard remained in the distribution system is deemed to be 25 days, unless a person subject to liability or EPA demonstrates by reasonably specific showings, by direct or circumstantial

evidence, that the non-complying fuel, fuel additive, or regulated blendstock remained in the distribution system for fewer than or more than 25 days.

(d) Any person liable for failure to meet, or causing a failure to meet, any other provision of this part is liable for a separate day of violation for each day such provision remains unfulfilled.

(e) Failure to meet separate requirements of this part count as separate violations.

(f) Violation of any misfueling prohibition under this part counts as a separate violation for each day the non-compliant fuel, fuel additive, or regulated blendstock remains in any engine, vehicle, or equipment.

(g) The presumed values of fuel parameters in paragraphs (g)(1) through (6) of this section apply for cases in which any person fails to comply with the sampling or testing requirements and must be reported, unless EPA, in its sole discretion, approves a different value. EPA may consider any relevant information to determine whether a different value is appropriate.

(1) For gasoline: 339 ppm sulfur, 1.64 volume percent benzene, and 11 psi RVP.

(2) For diesel fuel: 1,000 ppm sulfur.

(3) For ECA marine fuel: 5,000 ppm sulfur.

(4) For the PCG portion for PCG by subtraction under §1090.1320(a)(1): 0 ppm sulfur and 0 volume percent benzene.

(5) For fuel additives: 339 ppm sulfur.

(6) For regulated blendstocks: 339 ppm sulfur and 1.64 volume percent benzene.

§1090.1715 Liability provisions.

(a) Any person who violates any prohibited act or requirement in this part is liable for the violation.

(b) Any person who causes someone to commit a prohibited act under this subpart is liable for violating that prohibition.

(c) Any parent corporation is liable for any violation committed by any of its wholly-owned subsidiaries.

(d) Each partner to a joint venture, or each owner of a facility owned by two or more owners, is jointly and severally liable for any violation of this subpart that occurs at the joint venture facility or facility owned by the joint owners, or any violation of this part that is committed by the joint venture operation or any of the joint owners of the facility.

(e)(1) Any person that produced, imported, sold, offered for sale, dispensed, supplied, offered for supply, stored, transported, caused the transportation or storage of, or introduced into commerce fuel, fuel additive, or regulated blendstock that is in the storage tank containing fuel, fuel additive, or regulated blendstock that is found to be in violation of a per-gallon standard is liable for the violation.

(2) In order for a carrier to be liable under paragraph (e)(1) of this section, EPA must demonstrate by reasonably specific showing, by direct or circumstantial evidence, that the carrier caused the violation.

(f) If a fuel manufacturer's corporate, trade, or brand name is displayed at a facility where a violation occurs, the fuel manufacturer is liable for the violation. This also applies where the displayed corporate, trade, or brand name is from the fuel manufacturer's marketing subsidiary.

§1090.1720 Affirmative defense provisions.

(a) Any person liable for a violation under §1090.1715(e) or (f) will not be deemed in violation if the person demonstrates all the following:

(1) The violation was not caused by the person or the person's employee or agent.

(2) If PTD requirements of this part apply, the PTDs account for the fuel, fuel additive, or regulated blendstock found to be in violation and indicate that the violating fuel, fuel additive, or regulated blendstock was in compliance with the applicable requirements while in that person's control.

(3) The person conducted a quality assurance program, as specified in paragraph (d) of this section.

(i) A carrier may rely on the quality assurance program carried out by another party, including the party that owns the fuel in question, provided that the quality assurance program is carried out properly.

(ii) A retailer or WPC is not required to conduct sampling and testing of fuel

as part of their quality assurance program.

(b) For a violation found at a facility operating under the corporate, trade, or brand name of a fuel manufacturer, or a fuel manufacturer's marketing subsidiary, the fuel manufacturer must show, in addition to the defense elements required under paragraph (a) of this section, that the violation was caused by one of the following:

(1) An act in violation of law (other than the Clean Air Act or this part), or an act of sabotage or vandalism.

(2) The action of any retailer, distributor, reseller, oxygenate blender, carrier, retailer, or WPC in violation of a contractual agreement between the branded fuel manufacturer and the person designed to prevent such action, and despite periodic sampling and testing by the branded fuel manufacturer to ensure compliance with such contractual obligation.

(3) The action of any carrier or other distributor not subject to a contract with the fuel manufacturer, but engaged for transportation of fuel, fuel additive, or regulated blendstock despite specifications or inspections of procedures and equipment that are reasonably calculated to prevent such action.

(c) For any person to show under paragraph (a) of this section that a violation was not caused by that person, or to show under paragraph (b) of this section that a violation was caused by any of the specified actions, the person must demonstrate by reasonably specific showings, through direct or circumstantial evidence, that the violation was caused or must have been caused by another person and that the person asserting the defense did not contribute to that other person's causation.

(d) To demonstrate an acceptable quality assurance program under paragraph (a)(3) of this section, a person must present evidence of all the following:

(1)(i) A periodic sampling and testing program adequately designed to ensure the fuel, fuel additive, or regulated blendstock the person sold, dispensed, supplied, stored, or transported meets the applicable per-gallon standard. A person may meet this requirement by participating in the NFSP under § 1090.1405 that was in effect at the time of the violation.

(ii) In addition to the requirements of paragraph (d)(1)(i) of this section, a gasoline manufacturer must also participate in the NSTOP specified in § 1090.1450 at the time of the violation.

(2) On each occasion when a fuel, fuel additive, or regulated blendstock is found to be in noncompliance with the applicable per-gallon standard, the person does all the following:

(i) Immediately ceases selling, offering for sale, dispensing, supplying, offering for supply, storing, or transporting the non-complying fuel, fuel additive, or regulated blendstock.

(ii) Promptly remedies the violation and the factors that caused the violation (*e.g.*, by removing the non-complying fuel, fuel additive, or regulated blendstock from the distribution system until the applicable standard is achieved and taking steps to prevent future violations of a similar nature from occurring).

(3) For any carrier that transports a fuel, fuel additive, or regulated blendstock in a tank truck, the periodic sampling and testing program required under paragraph (d)(1) of this section does not need to include periodic sampling and testing of gasoline in the tank truck. In lieu of such tank truck sampling and testing, the carrier must demonstrate evidence of an oversight program for monitoring compliance with the requirements of this part relating to the transport or storage of the fuel, fuel additive, or regulated blendstock by tank truck, such as appropriate guidance to drivers regarding compliance with the applicable per-gallon standards and PTD requirements, and the periodic review of records received in the ordinary course of business concerning gasoline quality and delivery.

(e) In addition to the defenses provided in paragraphs (a) through (d) of this section, in any case in which an oxygenate blender, distributor, reseller, carrier, retailer, or WPC would be in violation under § 1090.1715 as a result of gasoline that contains between 9 and 15 percent ethanol (by volume) but exceeds the applicable standard by

more than 1.0 psi, the oxygenate blender, distributor, reseller, carrier, retailer, or WPC will not be deemed in violation if such person can demonstrate, by showing receipt of a certification from the facility from which the gasoline was received or other evidence acceptable to EPA, all the following:

(1) The gasoline portion of the blend complies with the applicable RVP standard in § 1090.215.

(2) The ethanol portion of the blend does not exceed 15 percent (by volume).

(3) No additional alcohol or other additive has been added to increase the RVP of the ethanol portion of the blend.

(4) In the case of a violation alleged against an oxygenate blender, distributor, reseller, or carrier, if the demonstration required by paragraphs (e)(1) through (3) of this section is made by a certification, it must be supported by evidence that the criteria in paragraphs (e)(1) through (3) of this section have been met, such as an oversight program conducted by or on behalf of the oxygenate blender, distributor, reseller, or carrier alleged to be in violation, which includes periodic sampling and testing of the gasoline or monitoring the volatility and ethanol content of the gasoline. Such certification will be deemed sufficient evidence of compliance provided it is not contradicted by specific evidence, such as testing results, and provided that the party has no other reasonable basis to believe that the facts stated in the certification are inaccurate. In the case of a violation alleged against a retail outlet or WPC facility, such certification will be deemed an adequate defense for the retailer or WPC, provided that the retailer or WPC is able to show certificates for all the gasoline contained in the storage tank found in violation, and, provided that the retailer or WPC has no reasonable basis to believe that the facts stated in the certifications are inaccurate.

Subpart S—Attestation Engagements

§ 1090.1800 General provisions.

(a) The following parties must arrange for attestation engagement using agreed-upon procedures as specified in this subpart:

(1) A gasoline manufacturer that produces or imports gasoline subject to the requirements of subpart C of this part.

(2) A gasoline manufacturer that performs testing as specified in subpart N of this part or that relies on testing from a third-party laboratory.

(b) An auditor performing attestation engagements must meet the following requirements:

(1) The auditor must meet one of the following professional qualifications:

(i) The auditor may be an internal auditor that is employed by the fuel manufacturer and certified by the Institute of Internal Auditors. Such an auditor must perform the attestation engagement in accordance with the *International Standards for the Professional Practice of Internal Auditing (Standards)* (incorporated by reference in § 1090.95).

(ii) The auditor may be a certified public accountant, or firm of such accountants, that is independent of the gasoline manufacturer. Such an auditor must comply with the AICPA *Code of Professional Conduct*, including its independence requirements, the AICPA *Statements on Quality Control Standards (SQCS) No. 8, A Firm's System of Quality Control* (both incorporated by reference in § 1090.95), and applicable rules of state boards of public accountancy. Such an auditor must also perform the attestation engagement in accordance with the AICPA *Statements on Standards for Attestation Engagements (SSAE) No. 18, Attestation Standards: Clarification and Recodification*, especially as noted in sections AT–C 105, 215, and 315 (incorporated by reference in § 1090.95).

(2) The auditor must meet the independence requirements in § 1090.55.

(3) The auditor must be registered with EPA under subpart I of this part.

(4) Any auditor suspended or debarred under 2 CFR part 1532 or 48 CFR part 9, subpart 9.4, is not qualified to perform attestation engagements under this subpart.

(c) An auditor must perform attestation engagements separately for each gasoline manufacturing facility for

which the gasoline manufacturer submitted reports to EPA under subpart J of this part for the compliance period.

(d) The following provisions apply to each attestation engagement performed under this subpart:

(1) The auditor must prepare a report identifying the applicable procedures specified in this subpart along with the auditor's corresponding findings for each procedure. The auditor must submit the report electronically to EPA by June 1 of the year following the compliance period.

(2) The auditor must identify any instances where compared values do not agree or where specified values do not meet applicable requirements under this part.

(3) Laboratory analysis refers to the original test result for each analysis of a product's properties. The following provisions apply in special cases:

(i) For a laboratory using test methods that must be correlated to the standard test method, the laboratory analysis must include the correlation factors along with the corresponding test results.

(ii) For a gasoline manufacturer that relies on a third-party laboratory for testing, the laboratory analysis consists of the results provided by the third-party laboratory.

§ 1090.1805 Representative samples.

(a) If the specified procedures require evaluation of a representative sample from the overall population for a given data set, determine the number of results for evaluation using one of the following methods:

(1) Determine sample size using the following table:

TABLE 1 TO PARAGRAPH (a)(1)—SAMPLE SIZE DETERMINATION

Population	Sample size
1–25	The smaller of the population or 19.
26–40	20.
41–65	25.
66 or more	29.

(2) Determine sample size corresponding to a confidence level of 95 percent, an expected error rate of 0 percent, and a maximum tolerable error rate of 10 percent, using conventional statistical principles and methods.

(3) Determine sample size using an alternate method that is equivalent to or better than the methods specified in paragraphs (a)(1) and (2) of this section with respect to strength of inference and freedom from bias. An auditor that determines a sample size using an alternate method must describe and justify the alternate method in the attestation report.

(b) Select specific data points for evaluation over the course of the compliance period in a way that leads to a simple random sample that properly represents the overall population for the data set.

§ 1090.1810 General procedures for gasoline manufacturers.

An auditor must perform the procedures in this section for a refiner, blending manufacturer, or transmix processer that produces gasoline.

(a) *Registration and EPA reports.* An auditor must review registration and EPA reports as follows:

(1) Obtain copies of the gasoline manufacturer's registration information submitted under subpart I of this part and all reports (except batch reports) submitted under subpart J of this part.

(2) For each gasoline manufacturing facility, confirm that the facility's registration is accurate based on the activities reported during the compliance period, including that the registration for the facility and any related updates were completed prior to conducting regulated activities at the facility and report any discrepancies.

(3) Confirm that the gasoline manufacturer submitted all the reports required under subpart J of this part for activities they performed during the compliance period and report any exceptions.

(4) Obtain a written statement from the gasoline manufacturer's RCO that the submitted reports are complete and accurate.

(5) Report in the attestation report the name of any commercial computer program used to track the data required under this part, if any.

(b) *Inventory reconciliation analysis.* An auditor must perform an inventory

reconciliation analysis review as follows:

(1) Obtain an inventory reconciliation analysis from the gasoline manufacturer for each product type produced at each facility (*e.g.*, RFG, CG, RBOB, CBOB), including the inventory at the beginning and end of the compliance period, receipts, production, shipments, transfers, and gain/loss.

(2) Foot and cross-foot the volumes.

(3) Compare the beginning and ending inventory to the manufacturer's inventory records for each product type and report any variances.

(4) Report in the attestation report the volume totals for each product type on the basis of which gasoline batches are reported.

(c) *Listing of tenders.* An auditor must review a listing of tenders as follows:

(1) Obtain detailed listings of gasoline tenders from the gasoline manufacturer, by product type.

(2) Foot the listings of gasoline tenders.

(3) Compare the total volume from the gasoline tenders to the total volume shipped in the inventory reconciliation analysis for each product type and report any variances.

(d) *Listing of batches.* An auditor must review listings of batches as follows:

(1) Obtain the batch reports submitted under subpart J of this part.

(2) Foot the batch volumes by product type.

(3) Compare the total volume from the batch reports to the total production or shipment volume from the inventory reconciliation analysis specified in paragraph (b)(4) of this section for each product type and report any variances.

(4) Report as a finding in the attestation report any gasoline batch with reported values that do not meet a pergallon standard in subpart C of this part.

(e) *Test methods.* An auditor must follow the procedures specified in §1090.1845 to determine whether the gasoline manufacturer complies with the applicable quality control requirements specified in §1090.1375.

(f) *Detailed testing of BOB tenders.* An auditor must review a detailed listing of BOB tenders as follows:

(1) Select a representative sample from the listing of BOB tenders.

(2) Obtain the associated PTD for each selected sample.

(3) Using a unique identifier, confirm that the correct PTDs are obtained for the samples and compare the volume on the listing of each selected BOB tender to the associated PTD and report any exceptions.

(4) Confirm that the PTD associated with each selected BOB tender contains all the applicable language requirements under subpart L of this part and report any exceptions.

(g) *Detailed testing of BOB batches.* An auditor must review a detailed listing of BOB batches as follows:

(1) Select a representative sample from the BOB batch reports submitted under subpart J of this part.

(2) Obtain the volume documentation and laboratory analysis for each selected BOB batch.

(3) Compare the reported volume for each selected BOB batch to the volume documentation and report any exceptions.

(4) Compare the reported properties for each selected BOB batch to the laboratory analysis and report any exceptions.

(5) Compare the reported test methods used for each selected BOB batch to the laboratory analysis and report any exceptions.

(6) Determine each oxygenate type and amount that is required for blending with the BOB.

(7) Confirm that each oxygenate type and amount included in the BOB hand blend agrees with the manufacturer's blending instructions for each selected BOB batch and report any exceptions.

(8) Confirm that the manufacturer participates in the NFSP under §1090.1405, if applicable.

(9) For a blending manufacturer, confirm that the laboratory analysis includes test results for oxygenate content, if applicable, and distillation parameters (*i.e.*, T10, T50, T90, final boiling point, and percent residue). For a blending manufacturer not required to measure oxygenate content, confirm that records demonstrate that the PCG or blendstock contained no oxygenate, no oxygenate was added to the final

gasoline batch, and the blending manufacturer did not account for oxygenate added downstream under § 1090.710.

(h) *Detailed testing of finished gasoline tenders.* An auditor must review a detailed listing of finished gasoline tenders as follows:

(1) Select a representative sample from the listing of finished gasoline tenders.

(2) Obtain the associated PTD for each selected sample.

(3) Using a unique identifier, confirm that the correct PTDs are obtained for the samples and compare the volume on the listing for each finished gasoline tender to the associated PTD and report any exceptions.

(4) Confirm that the PTD associated with each selected finished gasoline tender contains all the applicable language requirements under subpart L of this part and report any exceptions.

(i) *Detailed testing of finished gasoline batches.* An auditor must review a detailed listing of finished gasoline batches as follows:

(1) Select a representative sample of finished gasoline batches from the batch reports submitted under subpart J of this part.

(2) Obtain the volume documentation and laboratory analysis for each selected finished gasoline batch.

(3) Compare the reported volume for each selected finished gasoline batch to the volume documentation and report any exceptions.

(4) Compare the reported properties for each selected finished gasoline batch to the laboratory analysis and report any exceptions.

(5) Compare the reported test methods used for each selected finished gasoline batch to the laboratory analysis and report any exceptions.

(6) For a blending manufacturer, confirm that the laboratory analysis includes test results for oxygenate content, if applicable, and distillation parameters (*i.e.*, T10, T50, T90, final boiling point, and percent residue). For a blending manufacturer not required to measure oxygenate content, confirm that records demonstrate that the PCG or blendstock contained no oxygenate, no oxygenate was added to the final gasoline batch, and the blending manufacturer did not account for oxygenate added downstream under § 1090.710.

(j) *Detailed testing of blendstock batches.* In the case of adding blendstock to TGP or PCG under § 1090.1320(a)(2), an auditor must review a detailed listing of blendstock batches as follows:

(1) Select a representative sample of blendstock batches from the batch reports submitted under subpart J of this part.

(2) Obtain the volume documentation and the laboratory analysis for each selected blendstock batch.

(3) Compare the reported volume for each selected blendstock batch to the volume documentation and report any exceptions.

(4) Compare the reported properties for each selected blendstock batch to the laboratory analysis and report any exceptions.

(5) Compare the reported test methods used for each selected blendstock batch to the laboratory analysis and report any exceptions.

(6) For blending a manufacturer not required to measure oxygenate content, confirm that records demonstrate that the PCG or blendstock contained no oxygenate, no oxygenate was added to the final gasoline batch, and the blending manufacturer did not account for oxygenate added downstream under § 1090.710.

§ 1090.1815 General procedures for gasoline importers.

An auditor must perform the procedures in this section for a gasoline importer.

(a) *Registration and EPA reports.* An auditor must review registration and EPA reports for a gasoline importer as specified in § 1090.1810(a).

(b) *Listing of imports.* An auditor must review a listing of imports as follows:

(1) Obtain detailed listings of gasoline imports from the importer, by product type.

(2) Foot the listings of gasoline imports from the importer.

(3) Obtain listings of gasoline imports directly from the third-party customs broker, by product type.

(4) Foot the listings of gasoline imports from the third-party customs broker.

(5) Compare the total volume from the importer's listings of gasoline imports to the listings from the third-party customs broker for each product type and report any variances.

(6) Report in the attestation report the total imported volume for each product type.

(c) *Listing of batches.* An auditor must review listings of batches as follows:

(1) Obtain the batch reports submitted under subpart J of this part.

(2) Foot the batch volumes by product type.

(3) Compare the total volume from the batch reports to the total volume per the listings of gasoline imports obtained under paragraph (b)(1) of this section for each product type and report any variances.

(4) Report as a finding in the attestation report any gasoline batches with parameter results that do not meet the per-gallon standards in subpart C of this part.

(d) *Test methods.* An auditor must follow the procedures specified in § 1090.1845 to determine whether the importer complies with the quality control requirements specified in § 1090.1375 for gasoline, gasoline additives, and gasoline regulated blendstocks.

(e) *Detailed testing of BOB imports.* An auditor must review a detailed listing of BOB imports as follows:

(1) Select a representative sample from the listing of BOB imports from the importer and obtain the associated U.S. Customs Entry Summary and PTD for each selected BOB import.

(2) Using a unique identifier, confirm that the correct U.S. Customs Entry Summaries are obtained for the samples and compare the location that each selected BOB import arrived in the United States and volume on the listing of BOB imports from the importer to the U.S. Customs Entry Summary and report any exceptions.

(3) Using a unique identifier, confirm that the correct PTDs are obtained for the samples. Confirm that the PTD contains all the applicable language requirements under subpart L of this part and report any exceptions.

(f) *Detailed testing of BOB batches.* An auditor must review a detailed listing of BOB batches as follows:

(1) Select a representative sample of BOB batches from the batch reports submitted under subpart J of this part and obtain the volume inspection report and laboratory analysis for each selected BOB batch.

(2) Compare the reported volume for each selected BOB batch to the volume inspection report and report any exceptions.

(3) Compare the reported properties for each selected BOB batch to the laboratory analysis and report any exceptions.

(4) Compare the reported test methods used for each selected BOB batch to the laboratory analysis and report any exceptions.

(5) Determine each oxygenate type and amount that is required for blending with each selected BOB batch.

(6) Confirm that each oxygenate type and amount included in the BOB hand blend agrees within an acceptable range to each selected BOB batch and report any exceptions.

(7) Confirm that the importer participates in the NFSP under § 1090.1405, if applicable.

(g) *Detailed testing of finished gasoline imports.* An auditor must review a detailed listing of finished gasoline imports as follows:

(1) Select a representative sample from the listing of finished gasoline imports from the importer and obtain the associated U.S. Customs Entry Summary and PTD for each selected finished gasoline import.

(2) Using a unique identifier, confirm that the correct U.S. Customs Entry Summaries are obtained for the samples and compare the location that each selected finished gasoline import arrived in the United States and volume on the listing of finished gasoline imports from the importer to the U.S. Customs Entry Summary and report any exceptions.

(3) Using a unique identifier, confirm that the correct PTDs are obtained for the samples. Confirm that the PTD contain all the applicable language requirements under subpart L of this part and report any exceptions.

(h) *Detailed testing of finished gasoline batches.* An auditor must review a detailed listing of finished gasoline batches as follows:

(1) Select a representative sample of finished gasoline batches from the batch reports submitted under subpart J of this part and obtain the volume inspection report and laboratory analysis for each selected finished gasoline batch.

(2) Compare the reported volume for each selected finished gasoline batch to the volume inspection report and report any exceptions.

(3) Compare the reported properties for each selected finished gasoline batch to the laboratory analysis and report any exceptions.

(4) Compare the reported test methods used for each selected finished gasoline batch to the laboratory analysis and report any exceptions.

(i) *Additional procedures for certain gasoline imported by rail or truck.* An auditor must perform the following additional procedures for an importer that imports gasoline into the United States by rail or truck under § 1090.1610:

(1) Select a representative sample from the listing of batches obtained under paragraph (c)(1) of this section and perform the following for each selected batch:

(i) Identify the point of sampling and testing associated with each selected batch in the tank activity records from the supplier.

(ii) Confirm that the sampling and testing occurred after the most recent delivery into the supplier's storage tank and before transferring product to the railcar or truck.

(2)(i) Obtain a detailed listing of the importer's quality assurance program sampling and testing results.

(ii) Determine whether the frequency of the sampling and testing meets the requirements in § 1090.1610(a)(2).

(iii) Select a representative sample from the importer's sampling and testing records under the quality assurance program and perform the following for each selected batch:

(A) Obtain the corresponding laboratory analysis.

(B) Determine whether the importer analyzed the test sample, and whether they performed the analysis using the methods specified in subpart N of this part.

(C) Review the terminal test results corresponding to the time of collecting the quality assurance test samples. Compare the terminal test results with the test results from the quality assurance program, noting any parameters with differences that are greater than the reproducibility of the applicable method specified in subpart N of this part.

§ 1090.1820 Additional procedures for gasoline treated as blendstock.

In addition to any applicable procedures required under §§ 1090.1810 and 1090.1815, an auditor must perform the procedures in this section for a gasoline manufacturer that imports GTAB under § 1090.1615.

(a) *Listing of GTAB imports.* An auditor must review a listing of GTAB imports as follows:

(1) Obtain a detailed listing of GTAB imports from the GTAB importer.

(2) Foot the listing of GTAB imports from the GTAB importer.

(3) Obtain a listing of GTAB imports directly from the third-party customs broker.

(4) Foot the listing of GTAB imports from the third-party customs broker and report any variances.

(5) Compare the total volume from the GTAB importer's listing of GTAB imports to the listing from the third-party customs broker.

(6) Report in the attestation report the total imported volume of GTAB and the corresponding facilities at which the GTAB was blended.

(b) *Listing of GTAB batches.* An auditor must review a listing of GTAB batches as follows:

(1) Obtain the GTAB batch reports submitted under subpart J of this part.

(2) Foot the batch volumes.

(3) Compare the total volume from the GTAB batch reports to the total volume from the listing of GTAB imports in paragraph (a)(6) of this section and report any variances.

(c) *Detailed testing of GTAB imports.* An auditor must review a detailed listing of GTAB imports as follows:

(1) Select a representative sample from the listing of GTAB imports obtained under paragraph (a)(1) of this section.

(2) For each selected GTAB batch, obtain the U.S. Customs Entry Summaries.

(3) Using a unique identifier, confirm that the correct U.S. Customs Entry Summaries are obtained for the samples. Compare the volumes and locations that each selected GTAB batch arrived in the United States to the U.S. Customs Entry Summary and report any exceptions.

(d) *Detailed testing of GTAB batches.* An auditor must review a detailed listing of GTAB batches as follows:

(1) Select a representative sample from the GTAB batch reports obtained under paragraph (b)(1) of this section.

(2) For each selected GTAB batch sample, obtain the volume inspection report.

(3) Compare the reported volume for each selected GTAB batch to the volume inspection report and report any exceptions.

(e) *GTAB tracing.* An auditor must trace and review the movement of GTAB from importation to gasoline production as follows:

(1) Compare the volume total on each GTAB batch report obtained under paragraph (b)(1) of this section to the GTAB volume total in the gasoline manufacturer's inventory reconciliation analysis under § 1090.1810(b).

(2) For each selected GTAB batch under paragraph (d)(1) of this section:

(i) Obtain tank activity records that describe the movement of each selected GTAB batch from importation to gasoline production.

(ii) Identify each selected GTAB batch in the tank activity records and trace each selected GTAB batch to subsequent reported batches of BOB or finished gasoline.

(iii) Match the location of the facility where gasoline was produced from each selected GTAB batch to the location where each selected GTAB batch arrived in the United States, or to the facility directly receiving the GTAB batch from the import facility.

(iv) Determine the status of the tank(s) before receiving each selected GTAB batch (*e.g.*, empty tank, tank containing blendstock, tank containing GTAB, tank containing PCG).

(v) If the tank(s) contained PCG before receiving the selected GTAB batch, take the following additional steps:

(A) Obtain and review a copy of the documented tank mixing procedures.

(B) Determine the volume and properties of the tank bottom that was PCG before adding GTAB.

(C) Confirm that the gasoline manufacturer determined the volume and properties of the BOB or finished gasoline produced using GTAB by excluding the volume and properties of any PCG, and that the gasoline manufacturer separately reported the PCG volume and properties under subpart J of this part and report any discrepancies.

§ 1090.1825 Additional procedures for PCG used to produce gasoline.

In addition to any applicable procedures required under § 1090.1810, an auditor must perform the procedures in this section for a gasoline manufacturer that produces gasoline from PCG under § 1090.1320.

(a) *Listing of PCG batches.* An auditor must review a listing of PCG batches as follows:

(1) Obtain the PCG batch reports submitted under subpart J of this part.

(2) Foot the batch volumes.

(3) Compare the volume total for each PCG batch report to the receipt volume total in the inventory reconciliation analysis specified in § 1090.1810(b) and report any variances.

(b) *Detailed testing of PCG batches.* An auditor must review a detailed listing of PCG batches as follows:

(1) Select a representative sample from the PCG batch reports obtained under paragraph (a)(1) of this section.

(2) Obtain the volume documentation, laboratory analysis, associated PTDs, and tank activity records for each selected PCG batch.

(3) Identify each selected PCG batch in the tank activity records and trace each selected PCG batch to subsequent reported batches of BOB or finished gasoline and report any exceptions.

(4) For each selected PCG batch, report as a finding in the attestation report any instances where the reported PCG batch volume was adjusted from the original receipt volume, such as for exported PCG.

(5) Compare the volume for each selected PCG batch to the volume documentation and report any exceptions.

(6) Compare the product type and grade for each selected PCG batch to the associated PTDs and report any exceptions.

(7) Compare the reported properties for each selected PCG batch to the laboratory analysis and report any exceptions.

(8) Compare the reported test methods used for each selected PCG batch to the laboratory analysis and report any exceptions.

§ 1090.1830 Alternative procedures for certified butane blenders.

An auditor must use the procedures in this section instead of or in addition to the applicable procedures in § 1090.1810 for a certified butane blender that blends certified butane into PCG under § 1090.1320(b).

(a) *Registration and EPA reports.* An auditor must review registration and EPA reports as follows:

(1) Obtain copies of the certified butane blender's registration information submitted under subpart I of this part and all reports submitted under subpart J of this part, including the batch reports for the butane received and blended.

(2) For each butane blending facility, confirm that the facility's registration is accurate based on activities reported during the compliance period, including that the registration for the facility and any related updates were completed prior to conducting regulated activities at the facility and report any discrepancies.

(3) Confirm that the certified butane blender submitted the reports required under subpart J of this part for activities they performed during the compliance period and report any exceptions.

(4) Obtain a written statement from the certified butane blender's RCO that the submitted reports are complete and accurate.

(5) Report in the attestation report the name of any commercial computer program used to track the data required under this part, if any.

(b) *Inventory reconciliation analysis.* An auditor must perform an inventory reconciliation analysis review as follows:

(1) Obtain an inventory reconciliation analysis from the certified butane blender for each butane blending facility related to all certified butane movements, including the inventory at the beginning and end of the compliance period, receipts, blending/production volumes, shipments, transfers, and gain/loss.

(2) Foot and cross-foot the volumes.

(3) Compare the beginning and ending inventory to the certified butane blender's inventory records and report any variances.

(4) Compare the total volume of certified butane received from the batch reports obtained under paragraph (a)(1) of this section to the inventory reconciliation analysis and report any variances.

(5) Compare the total volume of certified butane blended from the batch reports to the inventory reconciliation analysis and report any variances.

(6) Report in the attestation report the total volume of certified butane received and blended.

(c) *Listing of certified butane receipts.* An auditor must review a listing of certified butane receipts as follows:

(1) Obtain a detailed listing of all certified butane batches received at the butane blending facility from the certified butane blender.

(2) Foot the listing of certified butane batches received.

(3) Compare the total volume from batch reports for certified butane received at the butane blending facility to the certified butane blender's listing of certified butane batches received and report any variances.

(d) *Detailed testing of certified butane batches.* An auditor must review a detailed listing of certified butane batches as follows:

(1) Select a representative sample from the certified butane batch reports submitted under subpart J of this part.

(2) Obtain the volume documentation and laboratory analysis for each selected certified butane batch.

(3) Compare the reported volume for each selected certified butane batch to the volume documentation and report any exceptions.

(4) Compare the reported properties for each selected certified butane batch to the laboratory analysis and report any exceptions.

(5) Compare the reported test methods used for each selected certified butane batch to the laboratory analysis and report any exceptions.

(6) Confirm that the butane meets the standards for certified butane under subpart C of this part and report any exceptions.

(e) *Quality control review.* An auditor must obtain the certified butane blender's sampling and testing results for certified butane received and determine if the frequency of the sampling and testing meets the requirements in § 1090.1320(b)(4) and report any discrepancies.

§ 1090.1835 Alternative procedures for certified pentane blenders.

(a) An auditor must use the procedures in this section instead of or in addition to the applicable procedures in § 1090.1810 for a certified pentane blender that blends certified pentane into PCG under § 1090.1320(b).

(b) An auditor must apply the procedures in § 1090.1830 by substituting ''pentane'' for ''butane'' in all cases.

§ 1090.1840 Additional procedures related to compliance with gasoline average standards.

An auditor must perform the procedures in this section for a gasoline manufacturer that complies with the standards in subpart C of this part using the procedures specified in subpart H of this part.

(a) *Annual compliance demonstration review.* An auditor must review annual compliance demonstrations as follows:

(1) Obtain the annual compliance reports for sulfur and benzene and associated batch reports submitted under subpart J of this part.

(2)(i) For a gasoline refiner or blending manufacturer, compare the gasoline production volume from the annual compliance report to the inventory reconciliation analysis under § 1090.1810(b) and report any variances.

(ii) For a gasoline importer, compare the gasoline import volume from the annual compliance report to the corresponding volume from the listing of imports under § 1090.1815(b) and report any variances.

(3) For each facility, recalculate the following and report in the attestation report the recalculated values:

(i) Compliance sulfur value, per § 1090.700(a)(1), and compliance benzene value, per § 1090.700(b)(1)(i).

(ii) Unadjusted average sulfur concentration, per § 1090.745(b), and average benzene concentration, per § 1090.700(b)(3).

(iii) Number of credits generated during the compliance period, or number of banked or traded credits needed to meet standards for the compliance period.

(iv) Number of credits from the preceding compliance period that are expired or otherwise no longer available for the compliance period being reviewed.

(v) Net average sulfur concentration, per § 1090.745(c), and net average benzene concentration, per § 1090.745(d).

(4) Compare the recalculated values in paragraph (a)(3) of this section to the reported values in the annual compliance reports and report any exceptions.

(5) Report in the attestation report whether the gasoline manufacturer had a deficit for both the compliance period being reviewed and the preceding compliance period.

(b) *Credit transaction review.* An auditor must review credit transactions as follows:

(1) Obtain the gasoline manufacturer's credit transaction reports submitted under subpart J of this part and contracts or other information that documents all credit transfers. Also obtain records that support intracompany transfers.

(2) For each reported transaction, compare the supporting documentation with the credit transaction reports for the following elements and report any exceptions:

(i) Compliance period of creation.

(ii) Credit type (*i.e.*, sulfur or benzene) and number of times traded.

(iii) Quantity.

(iv) The name of the other company participating in the credit transfer.

(v) Transaction type.

(c) *Facility-level credit reconciliation.* An auditor must perform a facility-level credit reconciliation separately

for each gasoline manufacturing facility as follows:

(1) Obtain the credits remaining or the credit deficit from the previous compliance period from the gasoline manufacturer's credit transaction information for the previous compliance period.

(2) Compute and report as a finding the net credits remaining at the end of the compliance period.

(3) Compare the ending balance of credits or credit deficit recalculated in paragraph (c)(2) of this section to the corresponding value from the annual compliance report and report any variances.

(4) For an importer, the procedures of this paragraph (c) apply at the company level.

(d) *Company-level credit reconciliation.* An auditor must perform a company-level credit reconciliation as follows:

(1) Obtain a credit reconciliation listing company-wide credits aggregated by facility for the compliance period.

(2) Foot and cross-foot the credit quantities.

(3) Compare and report the beginning balance of credits, the ending balance of credits, the associated credit activity at the company level in accordance with the credit reconciliation listing, and the corresponding credit balances and activity submitted under subpart J of this part.

(e) *Procedures for gasoline manufacturers that recertify BOB.* An auditor must perform the following procedures for a gasoline manufacturer that recertifies a BOB under § 1090.740 and incurs a deficit:

(1) Perform the procedures specified in § 1090.1810(a) to review registration and EPA reports.

(2) Obtain the batch reports for recertified BOB submitted under subpart J of this part.

(3) Select a representative sample of recertified BOB batches from the batch reports.

(4) For each sample, obtain supporting documentation.

(5) Confirm the accuracy of the information reported and report any exceptions.

(6) Recalculate the deficits in accordance with the provisions of § 1090.740 and report any discrepancies.

(7) Confirm that the deficits are included in the annual compliance demonstration calculations and report any exceptions.

§ 1090.1845 Procedures related to meeting performance-based measurement and statistical quality control for test methods.

(a) *General provisions.* (1) An auditor must conduct the procedures specified in this section for a gasoline manufacturer.

(2) An auditor performing the procedures specified in this section must meet the laboratory experience requirements specified in § 1090.55(b)(2).

(3) In cases where the auditor employs, contracts, or subcontracts an external specialist, all the requirements in § 1090.55 apply to the external specialist. The auditor is responsible for overseeing the work of the specialist, consistent with applicable professional standards specified in § 1090.1800.

(4) In the case of quality control testing at a third-party laboratory, the auditor may perform a single attestation engagement on the third-party laboratory for multiple gasoline manufacturers if the auditor directly reviewed the information from the third-party laboratory. A third-party laboratory may also arrange for an auditor to perform a single attestation engagement on the third-party laboratory and make that available to gasoline manufacturers that have testing performed by the third-party laboratory.

(b) *Non-referee method qualification review.* For each test method used to measure a parameter for gasoline as specified in a report submitted under subpart J of this part that is not one of the referee procedures listed in § 1090.1360(d), the auditor must review the following:

(1) Obtain supporting documentation showing that the laboratory has qualified the test method by meeting the precision and accuracy criteria specified under § 1090.1365.

(2) Report in the attestation report a list of the alternative methods used.

(3) Confirm that the gasoline manufacturer supplied the supporting documentation for each test method specified in paragraph (b)(1) of this section and report any exceptions.

(4) If an auditor has previously reviewed supporting documentation under this paragraph (b) for an alternative method at the facility, the auditor does not have to review the supporting document again.

(c) *Reference installation review.* For each reference installation used by the gasoline manufacturer during the compliance period, the auditor must review the following:

(1) Obtain supporting documentation demonstrating that the reference installation followed the qualification procedures specified in § 1090.1370(c)(1) and (2) and the quality control procedures specified in § 1090.1370(c)(3).

(2) Confirm that the facility completed the qualification procedures and report any exceptions.

(d) *Instrument control review.* For each test instrument used to test gasoline parameters for batches selected as part of a representative sample under § 1090.1810, the auditor must review whether test instruments were in control as follows:

(1) Obtain a listing from the laboratory of the instruments and period when the instruments were used to measure gasoline parameters during the compliance period for batches selected as part of the representative sample under § 1090.1810.

(2) Obtain statistical quality assurance data and control charts demonstrating ongoing quality testing to meet the accuracy and precision requirements specified in § 1090.1375 or 40 CFR 80.47, as applicable.

(3) Confirm that the facility performed statistical quality assurance monitoring of its instruments under § 1090.1375 and report any exceptions.

(4) Report as a finding in the attestation report the instrument lists obtained under paragraph (d)(1) of this section and the compliance period when the instrument control review was completed.

§ 1090.1850 Procedures related to in-line blending waivers.

In addition to any other procedure required under this subpart, an auditor must perform the procedures specified in this section for a gasoline manufacturer that relies on an in-line blending waiver under § 1090.1315.

(a) Obtain a copy of the gasoline manufacturer's in-line blending waiver submission and EPA's approval letter.

(b) Confirm that the sampling procedures and composite calculations conform to specifications as specified in § 1090.1315(a)(2).

(c) Review the gasoline manufacturer's procedure for defining a batch for compliance purposes. Review available test data demonstrating that the test results from in-line blending correctly characterize the fuel parameters for the designated batch.

(d) Confirm that the gasoline manufacturer corrected their operations because of previous audits, if applicable.

(e) Confirm that the equipment and procedures are not materially changed from the gasoline manufacturer's in-line blending waiver. In cases of material change in equipment or procedure, confirm that the gasoline manufacturer updated their in-line blending waiver and report any exceptions.

(f) Perform any additional procedures unique to the blending operation, as specified in the in-line blending waiver, and report any findings, variances, or exceptions, as applicable.

(g) Confirm that the gasoline manufacturer has complied with all provisions related to their in-line blending waiver and report any exceptions.

PARTS 1091–1099 [RESERVED]

CHAPTER IV—ENVIRONMENTAL PROTECTION AGENCY AND DEPARTMENT OF JUSTICE

SUBCHAPTER A—ACCIDENTAL RELEASE PREVENTION REQUIREMENTS; RISK MANAGEMENT PROGRAMS UNDER THE CLEAN AIR ACT SECTION 112(r)(7); DISTRIBUTION OF OFF-SITE CONSEQUENCE ANALYSIS INFORMATION

Part		*Page*
1400	Distribution of off-site consequence analysis information	591
1401–1499	[Reserved]	

SUBCHAPTER A—ACCIDENTAL RELEASE PREVENTION REQUIREMENTS; RISK MANAGEMENT PROGRAMS UNDER THE CLEAN AIR ACT SECTION 112(r)(7); DISTRIBUTION OF OFF-SITE CONSEQUENCE ANALYSIS INFORMATION

PART 1400—DISTRIBUTION OF OFF-SITE CONSEQUENCE ANALYSIS INFORMATION

Subpart A—General

Sec.
1400.1 Purpose.
1400.2 Definitions.

Subpart B—Public Access

1400.3 Public access to paper copies of off-site consequence analysis information.
1400.4 Vulnerable zone indicator system.
1400.5 Internet access to certain off-site consequence analysis data elements.
1400.6 Enhanced local access.

Subpart C—Access to Off-Site Consequence Analysis Information by Government Officials

1400.7 In general.
1400.8 Access to off-site consequence analysis information by Federal Government officials.
1400.9 Access to off-site consequence analysis information by State and local government officials.

Subpart D—Other Provisions

1400.10 Limitation on public dissemination.
1400.11 Limitation on dissemination to State and local government officials.
1400.12 Qualified researchers.
1400.13 Read-only database.

AUTHORITY: 42 U.S.C. 7412(r)(7)(H)(ii).

SOURCE: 65 FR 48131, Aug. 4, 2000, unless otherwise noted.

Subpart A—General

§ 1400.1 Purpose.

Stationary sources subject to the Chemical Accident Prevention Provisions of 40 CFR part 68 are required to analyze the potential harm to public health and welfare of hypothetical chemical accidents and submit the results of their analyses to the U.S. Environmental Protection Agency as part of risk management plans. This part governs access by the public and by government officials to the portions of risk management plans containing the results of those analyses and certain related materials. This part also restricts dissemination of that information by government officials.

§ 1400.2 Definitions.

For the purposes of this part:

(a) *Accidental release* means an unanticipated emission of a regulated substance or other extremely hazardous substance into the ambient air from a stationary source.

(b) *Administrator* means the Administrator of the U.S. Environmental Protection Agency or his or her designated representative.

(c) *Attorney General* means the Attorney General of the United States or his or her designated representative.

(d) *Federal government official* means—

(1) An officer or employee of the United States; and

(2) An officer or employee of an agent or contractor of the Federal government.

(e) *State or local government official* means—

(1) An officer or employee of a State or local government;

(2) An officer or employee of an agent or contractor of a State or local government;

(3) An individual affiliated with an entity that has been given, by a state or local government, responsibility for preventing, planning for, or responding to accidental releases, such as a member of a Local Emergency Planning Committee (LEPC) or a State Emergency Response Commission (SERC), or a paid or volunteer member of a fire or police department; or

(4) An officer or employee or an agent or contractor of an entity described in paragraph (e)(3) of this section.

(f) *LEPC* means a Local Emergency Planning Committee created under the Emergency Planning and Community Right-to-Know Act, 42 U.S.C. 11001 *et seq*.

(g) *Member of the public or person* means an individual.

(h) *Official use* means an action of a Federal, State, or local government agency or an entity described in paragraph (e)(3) of this section intended to carry out a function relevant to preventing, planning for, or responding to accidental releases.

(i) *Off-site consequence analysis (OCA) information* means sections 2 through 5 of a risk management plan (consisting of an evaluation of one or more worst-case release scenarios or alternative release scenarios) for an identified facility and any electronic database created by the Administrator from those sections.

(j) *Off-site consequence analysis (OCA) data elements* means the results of the off-site consequence analysis conducted by a stationary source pursuant to 40 CFR part 68, subpart B, when presented in a format different than sections 2 through 5 of a risk management plan or any Administrator-created electronic database.

(k) *Off-site consequence analysis (OCA) rankings* means any statewide or national rankings of identified stationary sources derived from OCA information.

(l) *Qualified researcher* means a researcher who receives OCA information pursuant to 42 U.S.C. 7412(r)(7)(H)(vii).

(m) *Related local government agencies* means local government agencies, such as police, fire, emergency management, and planning departments, that are involved in chemical emergency planning, prevention, or response.

(n) *Related state government agencies* means State government agencies, such as emergency management, environmental protection, health, and natural resources departments, that are involved in chemical emergency planning, prevention, or response.

(o) *Risk management plan (RMP)* means a risk management plan submitted to the Administrator by an owner or operator of a stationary source pursuant to 40 CFR part 68, subpart G.

(p) *SERC* means a State Emergency Response Commission created under the Emergency Planning and Community Right-to-Know Act, 42 U.S.C. 11001 *et seq*.

(q) *State* has the same meaning as provided in 42 U.S.C. 7602(d) (a state, the District of Columbia, the Commonwealth of Puerto Rico, the Virgin Islands, Guam, American Samoa, and the Commonwealth of the Northern Mariana Islands).

(r) *Stationary source* has the same meaning as provided in 40 CFR part 68 subpart A, § 68.3.

(s) *Vulnerable zone* means the geographical area that could be affected by a worst-case or alternative scenario release from a stationary source, as indicated by the off-site consequence analysis reported by the stationary source in its risk management plan pursuant to the applicable requirements of 40 CFR Part 68. It is defined as a circle, the center of which is the stationary source and the radius of which is the ''distance-to-endpoint,'' or the distance a toxic or flammable cloud, overpressure, or radiant heat would travel after being released and before dissipating to the point that it no longer threatens serious short-term harm to people or the environment.

Subpart B—Public Access

§ 1400.3 Public access to paper copies of off-site consequence analysis information.

(a) *General*. The Administrator and the Attorney General shall ensure that any member of the public has access to a paper copy of OCA information in the manner prescribed by this section.

(b) *Reading-room access*. Paper copies of OCA information shall be available in at least 50 reading rooms geographically distributed across the United States and its territories. The reading rooms shall allow any person to read, but not remove or mechanically reproduce, a paper copy of OCA information, in accordance with paragraphs (c) through (g) of this section and procedures established by the Administrator and Attorney General.

(c) *Limited number*. Any person shall be provided with access to a paper copy of the OCA information for up to 10 stationary sources located anywhere in the country, without geographical restriction, in a calendar month.

(d) *Additional access*. Any person also shall be provided with access to a paper

copy of the OCA information for stationary sources located in the jurisdiction of the LEPC where the person lives or works and for any other stationary source that has a vulnerable zone that extends into that LEPC's jurisdiction.

(e) *Personal identification for access to OCA information without geographical restriction*. Reading rooms established under this section shall provide a person with access to a paper copy of OCA information under paragraph (c) of this section only after a reading room representative has

(1) Ascertained the person's identity by viewing photo identification issued by a Federal, State, or local government agency to the person; and

(2) Obtained the person's signature on a sign-in sheet and a certification that the person has not received access to OCA information for more than 10 stationary sources for that calendar month.

(f) *Personal identification for access to local OCA information*. Reading rooms established under this section shall provide a person with access to a paper copy of OCA information under paragraph (d) of this section only after a reading room representative has

(1) Ascertained where the person lives or works by viewing appropriate documentation; and

(2) Obtained the person's signature on a sign-in sheet.

(g) *Record keeping*. Reading room personnel shall keep records of reading room use and certifications in accordance with procedures established by the Administrator and the Attorney General. These records shall be retained for no more than three years. Federal reading rooms will not index or otherwise manipulate the sign-in sheets according to individuals' names, except in accordance with the Privacy Act.

§ 1400.4 Vulnerable zone indicator system.

(a) *In general*. The Administrator shall provide access to a computer-based indicator that shall inform any person located in any state whether an address specified by that person might be within the vulnerable zone of one or more stationary sources, according to the data reported in RMPs. The indicator also shall provide information about how to obtain further information.

(b) *Methods of access*. The indicator shall be available on the Internet or by request made by telephone or by mail to the Administrator to operate the indicator for an address specified by the requestor. SERCs, LEPCs, and other related state or local government agencies are authorized and encouraged to operate the indicator as well.

§ 1400.5 Internet access to certain offsite consequence analysis data elements.

The Administrator shall include only the following OCA data elements in the risk management plan database available on the Internet:

(a) The concentration of the chemical (RMP Sections 2.1.b; 3.1.b);

(b) The physical state of the chemical (RMP Sections 2.2; 3.2);

(c) The statistical model used (RMP Sections 2.3; 3.3; 4.2; 5.2);

(d) The endpoint used for flammables in the worst-case scenario (RMP Section 4.5);

(e) The duration of the chemical release for the worst-case scenario (RMP Section 2.7);

(f) The wind speed during the chemical release (RMP Sections 2.8; 3.8);

(g) The atmospheric stability (RMP Sections 2.9; 3.9);

(h) The topography of the surrounding area (RMP Sections 2.10; 3.10);

(i) The passive mitigation systems considered (RMP Sections 2.15; 3.15; 4.10; 5.10); and

(j) The active mitigation systems considered (RMP Sections 3.16; 5.11).

§ 1400.6 Enhanced local access.

(a) *OCA data elements*. Consistent with 42 U.S.C. 7412(r)(7)(H)(xii)(II), members of LEPCs and SERCs, and any other State or local government official, may convey to the public OCA data elements orally or in writing, as long as the data elements are not conveyed in the format of sections 2 through 5 of an RMP or any electronic database developed by the Administrator from those sections. Disseminating OCA data elements to the public

in a manner consistent with this provision does not violate 42 U.S.C. 7412(r)(7)(H)(v) and is not punishable under federal law.

(b) *OCA information.* (1) LEPCs and related local government agencies are authorized and encouraged to allow any member of the public to read, but not remove or mechanically copy, a paper copy of the OCA sections of RMPs (i.e., sections 2 through 5) for stationary sources located within the jurisdiction of the LEPC and for any other stationary source that has a vulnerable zone that extends into that jurisdiction.

(2) LEPCs and related local government agencies that provide read-only access to the OCA sections of RMPs under this paragraph (b) are not required to limit the number of stationary sources for which a person can gain access, ascertain a person's identity or place of residence or work, or keep records of public access provided.

(3) SERCs and related state government agencies are authorized and encouraged to allow any person to read, but not remove or mechanically copy, a paper copy of the OCA sections of RMPs for the same stationary sources that the LEPC in whose jurisdiction the person lives or works would be authorized to make available to that person under paragraph (b)(1) of this section.

(4) Any LEPC, SERC, or related local or State government agency that allows a person to read the OCA sections of RMPs in a manner consistent with this paragraph (b) shall not be in violation of 42 U.S.C. 7412(r)(7)(H)(v) or any other provision of federal law.

Subpart C—Access to Off-Site Consequence Analysis Information by Government Officials.

§ 1400.7 In general.

The Administrator shall provide OCA information to government officials as provided in this subpart. Any OCA information provided to government officials shall be accompanied by a copy of the notice prescribed by 42 U.S.C. 7412(r)(7)(H)(vi).

§ 1400.8 Access to off-site consequence analysis information by Federal government officials.

The Administrator shall provide any Federal government official with the OCA information requested by the official for official use. The Administrator shall provide the OCA information to the official in electronic form, unless the official specifically requests the information in paper form. The Administrator may charge a fee to cover the cost of copying OCA information in paper form.

§ 1400.9 Access to off-site consequence analysis information by State and local government officials.

(a) The Administrator shall make available to any State or local government official for official use the OCA information for stationary sources located in the official's state.

(b) The Administrator also shall make available to any State or local government official for official use the OCA information for stationary sources not located in the official's state, at the request of the official.

(c) The Administrator shall provide OCA information to a State or local government official in electronic form, unless the official specifically requests the information in paper form. The Administrator may charge a fee to cover the cost of copying OCA information in paper form.

(d) Any State or local government official is authorized to provide, for official use, OCA information relating to stationary sources located in the official's state to other State or local government officials in that state and to State or local government officials in a contiguous state.

Subpart D—Other Provisions

§ 1400.10 Limitation on public dissemination.

Except as authorized by this part and by 42 U.S.C. 7412(r)(7)(H)(v)(III), Federal, State, and local government officials, and qualified researchers are prohibited from disseminating OCA information and OCA rankings to the public. Violation of this provision subjects the violator to criminal liability as provided in 42 U.S.C. 7412(r)(7)(H)(v)

and civil liability as provided in 42 U.S.C. 7413.

§ 1400.11 Limitation on dissemination to State and local government officials.

Except as authorized by this part and by 42 U.S.C. 7412(r)(7)(H)(v)(III), Federal, State, and local government officials, and qualified researchers are prohibited from disseminating OCA information to State and local government officials. Violation of this provision subjects the violator to civil liability as provided in 42 U.S.C. 7413.

§ 1400.12 Qualified researchers.

The Administrator is authorized to provide OCA information, including facility identification, to qualified researchers pursuant to a system developed and implemented under 42 U.S.C. 7412(r)(7)(H)(vii), in consultation with the Attorney General.

§ 1400.13 Read-only database.

The Administrator is authorized to establish, pursuant to 42 U.S.C. 7412(r)(7)(H)(viii), an information technology system that makes available to the public off-site consequence analysis information by means of a central database under the control of the Federal government that contains information that users may read, but that provides no means by which an electronic or mechanical copy of the information may be made.

PARTS 1401–1499 [RESERVED]

CHAPTER V—COUNCIL ON ENVIRONMENTAL QUALITY

SUBCHAPTER A—NATIONAL ENVIRONMENTAL POLICY ACT IMPLEMENTING REGULATIONS

Part		*Page*
1500	Purpose and policy	599
1501	NEPA and agency planning	602
1502	Environmental impact statement	609
1503	Commenting on Environmental impact statements	616
1504	Pre–decisional referrals to the Council of proposed Federal actions determined to be environmentally unsatisfactory	618
1505	NEPA and agency decision making	619
1506	Other requirements of NEPA	620
1507	Agency compliance	626
1508	Definitions	629

SUBCHAPTER B—ADMINISTRATIVE PROCEDURES AND OPERATIONS

1515	Freedom of Information Act procedures	633
1516	Privacy Act implementation	639
1517	Public meeting procedures of the Council on Environmental Quality	641
1518	Office of Environmental Quality Management Fund	645
1519–1599	[Reserved]	

SUBCHAPTER A—NATIONAL ENVIRONMENTAL POLICY ACT IMPLEMENTING REGULATIONS

PART 1500—PURPOSE AND POLICY

Sec.
1500.1 Purpose and policy.
1500.2 [Reserved]
1500.3 NEPA compliance.
1500.4 Reducing paperwork.
1500.5 Reducing delay.
1500.6 Agency authority.

AUTHORITY: 42 U.S.C. 4321–4347; 42 U.S.C. 4371–4375; 42 U.S.C. 7609; E.O. 11514, 35 FR 4247, 3 CFR, 1966–1970, Comp., p. 902, as amended by E.O. 11991, 42 FR 26967, 3 CFR, 1977 Comp., p. 123; and E.O. 13807, 82 FR 40463, 3 CFR, 2017, Comp., p. 369.

SOURCE: 85 FR 43357, July 16, 2020, unless otherwise noted.

§ 1500.1 Purpose and policy.

(a) The National Environmental Policy Act (NEPA) is a procedural statute intended to ensure Federal agencies consider the environmental impacts of their actions in the decision-making process. Section 101 of NEPA establishes the national environmental policy of the Federal Government to use all practicable means and measures to foster and promote the general welfare, create and maintain conditions under which man and nature can exist in productive harmony, and fulfill the social, economic, and other requirements of present and future generations of Americans. Section 102(2) of NEPA establishes the procedural requirements to carry out the policy stated in section 101 of NEPA. In particular, it requires Federal agencies to provide a detailed statement on proposals for major Federal actions significantly affecting the quality of the human environment. The purpose and function of NEPA is satisfied if Federal agencies have considered relevant environmental information, and the public has been informed regarding the decision-making process. NEPA does not mandate particular results or substantive outcomes. NEPA's purpose is not to generate paperwork or litigation, but to provide for informed decision making and foster excellent action.

(b) The regulations in this subchapter implement section 102(2) of NEPA. They provide direction to Federal agencies to determine what actions are subject to NEPA's procedural requirements and the level of NEPA review where applicable. The regulations in this subchapter are intended to ensure that relevant environmental information is identified and considered early in the process in order to ensure informed decision making by Federal agencies. The regulations in this subchapter are also intended to ensure that Federal agencies conduct environmental reviews in a coordinated, consistent, predictable and timely manner, and to reduce unnecessary burdens and delays. Finally, the regulations in this subchapter promote concurrent environmental reviews to ensure timely and efficient decision making.

§ 1500.2 [Reserved]

§ 1500.3 NEPA compliance.

(a) *Mandate.* This subchapter is applicable to and binding on all Federal agencies for implementing the procedural provisions of the National Environmental Policy Act of 1969, as amended (Pub. L. 91–190, 42 U.S.C. 4321 *et seq.*) (NEPA or the Act), except where compliance would be inconsistent with other statutory requirements. The regulations in this subchapter are issued pursuant to NEPA; the Environmental Quality Improvement Act of 1970, as amended (Pub. L. 91–224, 42 U.S.C. 4371 *et seq.*); section 309 of the Clean Air Act, as amended (42 U.S.C. 7609); Executive Order 11514, Protection and Enhancement of Environmental Quality (March 5, 1970), as amended by Executive Order 11991, Relating to the Protection and Enhancement of Environmental Quality (May 24, 1977); and Executive Order 13807, Establishing Discipline and Accountability in the Environmental Review and Permitting Process for Infrastructure Projects (August 15, 2017). The regulations in this subchapter apply to the whole of section 102(2) of NEPA. The provisions of the Act and the regulations in this subchapter must be read

together as a whole to comply with the law.

(b) *Exhaustion*. (1) To ensure informed decision making and reduce delays, agencies shall include a request for comments on potential alternatives and impacts, and identification of any relevant information, studies, or analyses of any kind concerning impacts affecting the quality of the human environment in the notice of intent to prepare an environmental impact statement (§ 1501.9(d)(7) of this chapter).

(2) The draft and final environmental impact statements shall include a summary of all alternatives, information, and analyses submitted by State, Tribal, and local governments and other public commenters for consideration by the lead and cooperating agencies in developing the draft and final environmental impact statements (§ 1502.17 of this chapter).

(3) For consideration by the lead and cooperating agencies, State, Tribal, and local governments and other public commenters must submit comments within the comment periods provided, and comments shall be as specific as possible (§§ 1503.1 and 1503.3 of this chapter). Comments or objections of any kind not submitted, including those based on submitted alternatives, information, and analyses, shall be forfeited as unexhausted.

(4) Informed by the submitted alternatives, information, and analyses, including the summary in the final environmental impact statement (§ 1502.17 of this chapter) and the agency's response to comments in the final environmental impact statement (§ 1503.4 of this chapter), together with any other material in the record that he or she determines relevant, the decision maker shall certify in the record of decision that the agency considered all of the alternatives, information, and analyses, and objections submitted by States, Tribal, and local governments and other public commenters for consideration by the lead and cooperating agencies in developing the environmental impact statement (§ 1505.2(b) of this chapter).

(c) *Review of NEPA compliance*. It is the Council's intention that judicial review of agency compliance with the regulations in this subchapter not occur before an agency has issued the record of decision or taken other final agency action. It is the Council's intention that any allegation of noncompliance with NEPA and the regulations in this subchapter should be resolved as expeditiously as possible. Consistent with their organic statutes, and as part of implementing the exhaustion provisions in paragraph (b) of this section, agencies may structure their procedures to include an appropriate bond or other security requirement.

(d) *Remedies*. Harm from the failure to comply with NEPA can be remedied by compliance with NEPA's procedural requirements as interpreted in the regulations in this subchapter. It is the Council's intention that the regulations in this subchapter create no presumption that violation of NEPA is a basis for injunctive relief or for a finding of irreparable harm. The regulations in this subchapter do not create a cause of action or right of action for violation of NEPA, which contains no such cause of action or right of action. It is the Council's intention that any actions to review, enjoin, stay, vacate, or otherwise alter an agency decision on the basis of an alleged NEPA violation be raised as soon as practicable after final agency action to avoid or minimize any costs to agencies, applicants, or any affected third parties. It is also the Council's intention that minor, non-substantive errors that have no effect on agency decision making shall be considered harmless and shall not invalidate an agency action.

(e) *Severability*. The sections of this subchapter are separate and severable from one another. If any section or portion therein is stayed or determined to be invalid, or the applicability of any section to any person or entity is held invalid, it is the Council's intention that the validity of the remainder of those parts shall not be affected, with the remaining sections to continue in effect.

§ 1500.4 Reducing paperwork.

Agencies shall reduce excessive paperwork by:

(a) Using categorical exclusions to define categories of actions that normally do not have a significant effect

on the human environment and therefore do not require preparation of an environmental impact statement (§ 1501.4 of this chapter).

(b) Using a finding of no significant impact when an action not otherwise excluded will not have a significant effect on the human environment and therefore does not require preparation of an environmental impact statement (§ 1501.6 of this chapter).

(c) Reducing the length of environmental documents by means such as meeting appropriate page limits (§§ 1501.5(f) and 1502.7 of this chapter).

(d) Preparing analytic and concise environmental impact statements (§ 1502.2 of this chapter).

(e) Discussing only briefly issues other than significant ones (§ 1502.2(b) of this chapter).

(f) Writing environmental impact statements in plain language (§ 1502.8 of this chapter).

(g) Following a clear format for environmental impact statements (§ 1502.10 of this chapter).

(h) Emphasizing the portions of the environmental impact statement that are useful to decision makers and the public (*e.g.*, §§ 1502.14 and 1502.15 of this chapter) and reducing emphasis on background material (§ 1502.1 of this chapter).

(i) Using the scoping process, not only to identify significant environmental issues deserving of study, but also to deemphasize insignificant issues, narrowing the scope of the environmental impact statement process accordingly (§ 1501.9 of this chapter).

(j) Summarizing the environmental impact statement (§ 1502.12 of this chapter).

(k) Using programmatic, policy, or plan environmental impact statements and tiering from statements of broad scope to those of narrower scope, to eliminate repetitive discussions of the same issues (§§ 1501.11 and 1502.4 of this chapter).

(l) Incorporating by reference (§ 1501.12 of this chapter).

(m) Integrating NEPA requirements with other environmental review and consultation requirements (§ 1502.24 of this chapter).

(n) Requiring comments to be as specific as possible (§ 1503.3 of this chapter).

(o) Attaching and publishing only changes to the draft environmental impact statement, rather than rewriting and publishing the entire statement when changes are minor (§ 1503.4(c) of this chapter).

(p) Eliminating duplication with State, Tribal, and local procedures, by providing for joint preparation of environmental documents where practicable (§ 1506.2 of this chapter), and with other Federal procedures, by providing that an agency may adopt appropriate environmental documents prepared by another agency (§ 1506.3 of this chapter).

(q) Combining environmental documents with other documents (§ 1506.4 of this chapter).

§ 1500.5 Reducing delay.

Agencies shall reduce delay by:

(a) Using categorical exclusions to define categories of actions that normally do not have a significant effect on the human environment (§ 1501.4 of this chapter) and therefore do not require preparation of an environmental impact statement.

(b) Using a finding of no significant impact when an action not otherwise excluded will not have a significant effect on the human environment (§ 1501.6 of this chapter) and therefore does not require preparation of an environmental impact statement.

(c) Integrating the NEPA process into early planning (§ 1501.2 of this chapter).

(d) Engaging in interagency cooperation before or as the environmental assessment or environmental impact statement is prepared, rather than awaiting submission of comments on a completed document (§§ 1501.7 and 1501.8 of this chapter).

(e) Ensuring the swift and fair resolution of lead agency disputes (§ 1501.7 of this chapter).

(f) Using the scoping process for an early identification of what are and what are not the real issues (§ 1501.9 of this chapter).

(g) Meeting appropriate time limits for the environmental assessment and

environmental impact statement processes (§ 1501.10 of this chapter).

(h) Preparing environmental impact statements early in the process (§ 1502.5 of this chapter).

(i) Integrating NEPA requirements with other environmental review and consultation requirements (§ 1502.24 of this chapter).

(j) Eliminating duplication with State, Tribal, and local procedures by providing for joint preparation of environmental documents where practicable (§ 1506.2 of this chapter) and with other Federal procedures by providing that agencies may jointly prepare or adopt appropriate environmental documents prepared by another agency (§ 1506.3 of this chapter).

(k) Combining environmental documents with other documents (§ 1506.4 of this chapter).

(l) Using accelerated procedures for proposals for legislation (§ 1506.8 of this chapter).

§ 1500.6 Agency authority.

Each agency shall interpret the provisions of the Act as a supplement to its existing authority and as a mandate to view policies and missions in the light of the Act's national environmental objectives, to the extent consistent with its existing authority. Agencies shall review their policies, procedures, and regulations accordingly and revise them as necessary to ensure full compliance with the purposes and provisions of the Act as interpreted by the regulations in this subchapter. The phrase ''to the fullest extent possible'' in section 102 of NEPA means that each agency of the Federal Government shall comply with that section, consistent with § 1501.1 of this chapter. Nothing contained in the regulations in this subchapter is intended or should be construed to limit an agency's other authorities or legal responsibilities.

PART 1501—NEPA AND AGENCY PLANNING

Sec.

1501.1 NEPA thresholds.
1501.2 Apply NEPA early in the process.
1501.3 Determine the appropriate level of NEPA review.
1501.4 Categorical exclusions.
1501.5 Environmental assessments.
1501.6 Findings of no significant impact.
1501.7 Lead agencies.
1501.8 Cooperating agencies.
1501.9 Scoping.
1501.10 Time limits.
1501.11 Tiering.
1501.12 Incorporation by reference.

AUTHORITY: 42 U.S.C. 4321–4347; 42 U.S.C. 4371–4375; 42 U.S.C. 7609; E.O. 11514, 35 FR 4247, 35 FR 4247, 3 CFR, 1966–1970, Comp., p. 902, as amended by E.O. 11991, 42 FR 26967, 3 CFR, 1977 Comp., p. 123; and E.O. 13807, 82 FR 40463, 3 CFR, 2017, Comp., p. 369.

SOURCE: 85 FR 43359, July 16, 2020, unless otherwise noted.

§ 1501.1 NEPA thresholds.

(a) In assessing whether NEPA applies or is otherwise fulfilled, Federal agencies should determine:

(1) Whether the proposed activity or decision is expressly exempt from NEPA under another statute;

(2) Whether compliance with NEPA would clearly and fundamentally conflict with the requirements of another statute;

(3) Whether compliance with NEPA would be inconsistent with Congressional intent expressed in another statute;

(4) Whether the proposed activity or decision is a major Federal action;

(5) Whether the proposed activity or decision, in whole or in part, is a nondiscretionary action for which the agency lacks authority to consider environmental effects as part of its decision-making process; and

(6) Whether the proposed action is an action for which another statute's requirements serve the function of agency compliance with the Act.

(b) Federal agencies may make determinations under this section in their agency NEPA procedures (§ 1507.3(d) of this chapter) or on an individual basis, as appropriate.

(1) Federal agencies may seek the Council's assistance in making an individual determination under this section.

(2) An agency shall consult with other Federal agencies concerning their concurrence in statutory determinations made under this section where more than one Federal agency administers the statute.

§ 1501.2 Apply NEPA early in the process.

(a) Agencies should integrate the NEPA process with other planning and authorization processes at the earliest reasonable time to ensure that agencies consider environmental impacts in their planning and decisions, to avoid delays later in the process, and to head off potential conflicts.

(b) Each agency shall:

(1) Comply with the mandate of section 102(2)(A) of NEPA to utilize a systematic, interdisciplinary approach which will ensure the integrated use of the natural and social sciences and the environmental design arts in planning and in decision making which may have an impact on man's environment, as specified by § 1507.2(a) of this chapter.

(2) Identify environmental effects and values in adequate detail so the decision maker can appropriately consider such effects and values alongside economic and technical analyses. Whenever practicable, agencies shall review and publish environmental documents and appropriate analyses at the same time as other planning documents.

(3) Study, develop, and describe appropriate alternatives to recommended courses of action in any proposal that involves unresolved conflicts concerning alternative uses of available resources as provided by section 102(2)(E) of NEPA.

(4) Provide for actions subject to NEPA that are planned by private applicants or other non-Federal entities before Federal involvement so that:

(i) Policies or designated staff are available to advise potential applicants of studies or other information foreseeably required for later Federal action.

(ii) The Federal agency consults early with appropriate State, Tribal, and local governments and with interested private persons and organizations when their involvement is reasonably foreseeable.

(iii) The Federal agency commences its NEPA process at the earliest reasonable time (§§ 1501.5(d) and 1502.5(b) of this chapter).

§ 1501.3 Determine the appropriate level of NEPA review.

(a) In assessing the appropriate level of NEPA review, Federal agencies should determine whether the proposed action:

(1) Normally does not have significant effects and is categorically excluded (§ 1501.4);

(2) Is not likely to have significant effects or the significance of the effects is unknown and is therefore appropriate for an environmental assessment (§ 1501.5); or

(3) Is likely to have significant effects and is therefore appropriate for an environmental impact statement (part 1502 of this chapter).

(b) In considering whether the effects of the proposed action are significant, agencies shall analyze the potentially affected environment and degree of the effects of the action. Agencies should consider connected actions consistent with § 1501.9(e)(1).

(1) In considering the potentially affected environment, agencies should consider, as appropriate to the specific action, the affected area (national, regional, or local) and its resources, such as listed species and designated critical habitat under the Endangered Species Act. Significance varies with the setting of the proposed action. For instance, in the case of a site-specific action, significance would usually depend only upon the effects in the local area.

(2) In considering the degree of the effects, agencies should consider the following, as appropriate to the specific action:

(i) Both short- and long-term effects.

(ii) Both beneficial and adverse effects.

(iii) Effects on public health and safety.

(iv) Effects that would violate Federal, State, Tribal, or local law protecting the environment.

§ 1501.4 Categorical exclusions.

(a) For efficiency, agencies shall identify in their agency NEPA procedures (§ 1507.3(e)(2)(ii) of this chapter) categories of actions that normally do not have a significant effect on the human environment, and therefore do

not require preparation of an environmental assessment or environmental impact statement.

(b) If an agency determines that a categorical exclusion identified in its agency NEPA procedures covers a proposed action, the agency shall evaluate the action for extraordinary circumstances in which a normally excluded action may have a significant effect.

(1) If an extraordinary circumstance is present, the agency nevertheless may categorically exclude the proposed action if the agency determines that there are circumstances that lessen the impacts or other conditions sufficient to avoid significant effects.

(2) If the agency cannot categorically exclude the proposed action, the agency shall prepare an environmental assessment or environmental impact statement, as appropriate.

§ 1501.5 Environmental assessments.

(a) An agency shall prepare an environmental assessment for a proposed action that is not likely to have significant effects or when the significance of the effects is unknown unless the agency finds that a categorical exclusion (§ 1501.4) is applicable or has decided to prepare an environmental impact statement.

(b) An agency may prepare an environmental assessment on any action in order to assist agency planning and decision making.

(c) An environmental assessment shall:

(1) Briefly provide sufficient evidence and analysis for determining whether to prepare an environmental impact statement or a finding of no significant impact; and

(2) Briefly discuss the purpose and need for the proposed action, alternatives as required by section 102(2)(E) of NEPA, and the environmental impacts of the proposed action and alternatives, and include a listing of agencies and persons consulted.

(d) For applications to the agency requiring an environmental assessment, the agency shall commence the environmental assessment as soon as practicable after receiving the application.

(e) Agencies shall involve the public, State, Tribal, and local governments, relevant agencies, and any applicants, to the extent practicable in preparing environmental assessments.

(f) The text of an environmental assessment shall be no more than 75 pages, not including appendices, unless a senior agency official approves in writing an assessment to exceed 75 pages and establishes a new page limit.

(g) Agencies may apply the following provisions to environmental assessments:

(1) Section 1502.21 of this chapter—Incomplete or unavailable information;

(2) Section 1502.23 of this chapter—Methodology and scientific accuracy; and

(3) Section 1502.24 of this chapter—Environmental review and consultation requirements.

§ 1501.6 Findings of no significant impact.

(a) An agency shall prepare a finding of no significant impact if the agency determines, based on the environmental assessment, not to prepare an environmental impact statement because the proposed action will not have significant effects.

(1) The agency shall make the finding of no significant impact available to the affected public as specified in § 1506.6(b) of this chapter.

(2) In the following circumstances, the agency shall make the finding of no significant impact available for public review for 30 days before the agency makes its final determination whether to prepare an environmental impact statement and before the action may begin:

(i) The proposed action is or is closely similar to one that normally requires the preparation of an environmental impact statement under the procedures adopted by the agency pursuant to § 1507.3 of this chapter; or

(ii) The nature of the proposed action is one without precedent.

(b) The finding of no significant impact shall include the environmental assessment or incorporate it by reference and shall note any other environmental documents related to it (§ 1501.9(f)(3)). If the assessment is included, the finding need not repeat any of the discussion in the assessment but may incorporate it by reference.

(c) The finding of no significant impact shall state the authority for any mitigation that the agency has adopted and any applicable monitoring or enforcement provisions. If the agency finds no significant impacts based on mitigation, the mitigated finding of no significant impact shall state any enforceable mitigation requirements or commitments that will be undertaken to avoid significant impacts.

§ 1501.7 Lead agencies.

(a) A lead agency shall supervise the preparation of an environmental impact statement or a complex environmental assessment if more than one Federal agency either:

(1) Proposes or is involved in the same action; or

(2) Is involved in a group of actions directly related to each other because of their functional interdependence or geographical proximity.

(b) Federal, State, Tribal, or local agencies, including at least one Federal agency, may act as joint lead agencies to prepare an environmental impact statement or environmental assessment (§ 1506.2 of this chapter).

(c) If an action falls within the provisions of paragraph (a) of this section, the potential lead agencies shall determine, by letter or memorandum, which agency will be the lead agency and which will be cooperating agencies. The agencies shall resolve the lead agency question so as not to cause delay. If there is disagreement among the agencies, the following factors (which are listed in order of descending importance) shall determine lead agency designation:

(1) Magnitude of agency's involvement.

(2) Project approval or disapproval authority.

(3) Expertise concerning the action's environmental effects.

(4) Duration of agency's involvement.

(5) Sequence of agency's involvement.

(d) Any Federal agency, or any State, Tribal, or local agency or private person substantially affected by the absence of lead agency designation, may make a written request to the senior agency officials of the potential lead agencies that a lead agency be designated.

(e) If Federal agencies are unable to agree on which agency will be the lead agency or if the procedure described in paragraph (c) of this section has not resulted in a lead agency designation within 45 days, any of the agencies or persons concerned may file a request with the Council asking it to determine which Federal agency shall be the lead agency. A copy of the request shall be transmitted to each potential lead agency. The request shall consist of:

(1) A precise description of the nature and extent of the proposed action; and

(2) A detailed statement of why each potential lead agency should or should not be the lead agency under the criteria specified in paragraph (c) of this section.

(f) Any potential lead agency may file a response within 20 days after a request is filed with the Council. As soon as possible, but not later than 20 days after receiving the request and all responses to it, the Council shall determine which Federal agency will be the lead agency and which other Federal agencies will be cooperating agencies.

(g) To the extent practicable, if a proposal will require action by more than one Federal agency and the lead agency determines that it requires preparation of an environmental impact statement, the lead and cooperating agencies shall evaluate the proposal in a single environmental impact statement and issue a joint record of decision. To the extent practicable, if a proposal will require action by more than one Federal agency and the lead agency determines that it requires preparation of an environmental assessment, the lead and cooperating agencies should evaluate the proposal in a single environmental assessment and, where appropriate, issue a joint finding of no significant impact.

(h) With respect to cooperating agencies, the lead agency shall:

(1) Request the participation of each cooperating agency in the NEPA process at the earliest practicable time.

(2) Use the environmental analysis and proposals of cooperating agencies

with jurisdiction by law or special expertise, to the maximum extent practicable.

(3) Meet with a cooperating agency at the latter's request.

(4) Determine the purpose and need, and alternatives in consultation with any cooperating agency.

(i) The lead agency shall develop a schedule, setting milestones for all environmental reviews and authorizations required for implementation of the action, in consultation with any applicant and all joint lead, cooperating, and participating agencies, as soon as practicable.

(j) If the lead agency anticipates that a milestone will be missed, it shall notify appropriate officials at the responsible agencies. As soon as practicable, the responsible agencies shall elevate the issue to the appropriate officials of the responsible agencies for timely resolution.

§ 1501.8 Cooperating agencies.

(a) The purpose of this section is to emphasize agency cooperation early in the NEPA process. Upon request of the lead agency, any Federal agency with jurisdiction by law shall be a cooperating agency. In addition, upon request of the lead agency, any other Federal agency with special expertise with respect to any environmental issue may be a cooperating agency. A State, Tribal, or local agency of similar qualifications may become a cooperating agency by agreement with the lead agency. An agency may request that the lead agency designate it a cooperating agency, and a Federal agency may appeal a denial of its request to the Council, in accordance with § 1501.7(e).

(b) Each cooperating agency shall:

(1) Participate in the NEPA process at the earliest practicable time.

(2) Participate in the scoping process (described in § 1501.9).

(3) On request of the lead agency, assume responsibility for developing information and preparing environmental analyses, including portions of the environmental impact statement or environmental assessment concerning which the cooperating agency has special expertise.

(4) On request of the lead agency, make available staff support to enhance the lead agency's interdisciplinary capability.

(5) Normally use its own funds. To the extent available funds permit, the lead agency shall fund those major activities or analyses it requests from cooperating agencies. Potential lead agencies shall include such funding requirements in their budget requests.

(6) Consult with the lead agency in developing the schedule (§ 1501.7(i)), meet the schedule, and elevate, as soon as practicable, to the senior agency official of the lead agency any issues relating to purpose and need, alternatives, or other issues that may affect any agencies' ability to meet the schedule.

(7) Meet the lead agency's schedule for providing comments and limit its comments to those matters for which it has jurisdiction by law or special expertise with respect to any environmental issue consistent with § 1503.2 of this chapter.

(8) To the maximum extent practicable, jointly issue environmental documents with the lead agency.

(c) In response to a lead agency's request for assistance in preparing the environmental documents (described in paragraph (b)(3), (4), or (5) of this section), a cooperating agency may reply that other program commitments preclude any involvement or the degree of involvement requested in the action that is the subject of the environmental impact statement or environmental assessment. The cooperating agency shall submit a copy of this reply to the Council and the senior agency official of the lead agency.

§ 1501.9 Scoping.

(a) *Generally*. Agencies shall use an early and open process to determine the scope of issues for analysis in an environmental impact statement, including identifying the significant issues and eliminating from further study non-significant issues. Scoping may begin as soon as practicable after the proposal for action is sufficiently developed for agency consideration. Scoping may include appropriate preapplication procedures or work conducted prior to publication of the notice of intent.

(b) *Invite cooperating and participating agencies.* As part of the scoping process, the lead agency shall invite the participation of likely affected Federal, State, Tribal, and local agencies and governments, the proponent of the action, and other likely affected or interested persons (including those who might not be in accord with the action), unless there is a limited exception under § 1507.3(f)(1) of this chapter.

(c) *Scoping outreach.* As part of the scoping process the lead agency may hold a scoping meeting or meetings, publish scoping information, or use other means to communicate with those persons or agencies who may be interested or affected, which the agency may integrate with any other early planning meeting. Such a scoping meeting will often be appropriate when the impacts of a particular action are confined to specific sites.

(d) *Notice of intent.* As soon as practicable after determining that a proposal is sufficiently developed to allow for meaningful public comment and requires an environmental impact statement, the lead agency shall publish a notice of intent to prepare an environmental impact statement in the FEDERAL REGISTER, except as provided in § 1507.3(f)(3) of this chapter. An agency also may publish notice in accordance with § 1506.6 of this chapter. The notice shall include, as appropriate:

(1) The purpose and need for the proposed action;

(2) A preliminary description of the proposed action and alternatives the environmental impact statement will consider;

(3) A brief summary of expected impacts;

(4) Anticipated permits and other authorizations;

(5) A schedule for the decision-making process;

(6) A description of the public scoping process, including any scoping meeting(s);

(7) A request for identification of potential alternatives, information, and analyses relevant to the proposed action (*see* § 1502.17 of this chapter); and

(8) Contact information for a person within the agency who can answer questions about the proposed action and the environmental impact statement.

(e) *Determination of scope.* As part of the scoping process, the lead agency shall determine the scope and the significant issues to be analyzed in depth in the environmental impact statement. To determine the scope of environmental impact statements, agencies shall consider:

(1) Actions (other than unconnected single actions) that may be connected actions, which means that they are closely related and therefore should be discussed in the same impact statement. Actions are connected if they:

(i) Automatically trigger other actions that may require environmental impact statements;

(ii) Cannot or will not proceed unless other actions are taken previously or simultaneously; or

(iii) Are interdependent parts of a larger action and depend on the larger action for their justification.

(2) Alternatives, which include the no action alternative; other reasonable courses of action; and mitigation measures (not in the proposed action).

(3) Impacts.

(f) *Additional scoping responsibilities.* As part of the scoping process, the lead agency shall:

(1) Identify and eliminate from detailed study the issues that are not significant or have been covered by prior environmental review(s) (§ 1506.3 of this chapter), narrowing the discussion of these issues in the statement to a brief presentation of why they will not have a significant effect on the human environment or providing a reference to their coverage elsewhere.

(2) Allocate assignments for preparation of the environmental impact statement among the lead and cooperating agencies, with the lead agency retaining responsibility for the statement.

(3) Indicate any public environmental assessments and other environmental impact statements that are being or will be prepared and are related to but are not part of the scope of the impact statement under consideration.

(4) Identify other environmental review, authorization, and consultation

requirements so the lead and cooperating agencies may prepare other required analyses and studies concurrently and integrated with the environmental impact statement, as provided in § 1502.24 of this chapter.

(5) Indicate the relationship between the timing of the preparation of environmental analyses and the agencies' tentative planning and decision-making schedule.

(g) *Revisions.* An agency shall revise the determinations made under paragraphs (b), (c), (e), and (f) of this section if substantial changes are made later in the proposed action, or if significant new circumstances or information arise which bear on the proposal or its impacts.

§ 1501.10 Time limits.

(a) To ensure that agencies conduct NEPA reviews as efficiently and expeditiously as practicable, Federal agencies should set time limits appropriate to individual actions or types of actions (consistent with the time intervals required by § 1506.11 of this chapter).

(b) To ensure timely decision making, agencies shall complete:

(1) Environmental assessments within 1 year unless a senior agency official of the lead agency approves a longer period in writing and establishes a new time limit. One year is measured from the date of agency decision to prepare an environmental assessment to the publication of an environmental assessment or a finding of no significant impact.

(2) Environmental impact statements within 2 years unless a senior agency official of the lead agency approves a longer period in writing and establishes a new time limit. Two years is measured from the date of the issuance of the notice of intent to the date a record of decision is signed.

(c) The senior agency official may consider the following factors in determining time limits:

(1) Potential for environmental harm.

(2) Size of the proposed action.

(3) State of the art of analytic techniques.

(4) Degree of public need for the proposed action, including the consequences of delay.

(5) Number of persons and agencies affected.

(6) Availability of relevant information.

(7) Other time limits imposed on the agency by law, regulations, or Executive order.

(d) The senior agency official may set overall time limits or limits for each constituent part of the NEPA process, which may include:

(1) Decision on whether to prepare an environmental impact statement (if not already decided).

(2) Determination of the scope of the environmental impact statement.

(3) Preparation of the draft environmental impact statement.

(4) Review of any comments on the draft environmental impact statement from the public and agencies.

(5) Preparation of the final environmental impact statement.

(6) Review of any comments on the final environmental impact statement.

(7) Decision on the action based in part on the environmental impact statement.

(e) The agency may designate a person (such as the project manager or a person in the agency's office with NEPA responsibilities) to expedite the NEPA process.

(f) State, Tribal, or local agencies or members of the public may request a Federal agency to set time limits.

§ 1501.11 Tiering.

(a) Agencies should tier their environmental impact statements and environmental assessments when it would eliminate repetitive discussions of the same issues, focus on the actual issues ripe for decision, and exclude from consideration issues already decided or not yet ripe at each level of environmental review. Tiering may also be appropriate for different stages of actions.

(b) When an agency has prepared an environmental impact statement or environmental assessment for a program or policy and then prepares a subsequent statement or assessment on an action included within the entire program or policy (such as a project- or

site-specific action), the tiered document needs only to summarize and incorporate by reference the issues discussed in the broader document. The tiered document shall concentrate on the issues specific to the subsequent action. The tiered document shall state where the earlier document is available.

(c) Tiering is appropriate when the sequence from an environmental impact statement or environmental assessment is:

(1) From a programmatic, plan, or policy environmental impact statement or environmental assessment to a program, plan, or policy statement or assessment of lesser or narrower scope or to a site-specific statement or assessment.

(2) From an environmental impact statement or environmental assessment on a specific action at an early stage (such as need and site selection) to a supplement (which is preferred) or a subsequent statement or assessment at a later stage (such as environmental mitigation). Tiering in such cases is appropriate when it helps the lead agency to focus on the issues that are ripe for decision and exclude from consideration issues already decided or not yet ripe.

§ 1501.12 Incorporation by reference.

Agencies shall incorporate material, such as planning studies, analyses, or other relevant information, into environmental documents by reference when the effect will be to cut down on bulk without impeding agency and public review of the action. Agencies shall cite the incorporated material in the document and briefly describe its content. Agencies may not incorporate material by reference unless it is reasonably available for inspection by potentially interested persons within the time allowed for comment. Agencies shall not incorporate by reference material based on proprietary data that is not available for review and comment.

PART 1502—ENVIRONMENTAL IMPACT STATEMENT

Sec.

1502.1 Purpose of environmental impact statement.
1502.2 Implementation.
1502.3 Statutory requirements for statements.
1502.4 Major Federal actions requiring the preparation of environmental impact statements.
1502.5 Timing.
1502.6 Interdisciplinary preparation.
1502.7 Page limits.
1502.8 Writing.
1502.9 Draft, final, and supplemental statements.
1502.10 Recommended format.
1502.11 Cover.
1502.12 Summary.
1502.13 Purpose and need.
1502.14 Alternatives including the proposed action.
1502.15 Affected environment.
1502.16 Environmental consequences.
1502.17 Summary of submitted alternatives, information, and analyses.
1502.18 List of preparers.
1502.19 Appendix.
1502.20 Publication of the environmental impact statement.
1502.21 Incomplete or unavailable information.
1502.22 Cost-benefit analysis.
1502.23 Methodology and scientific accuracy.
1502.24 Environmental review and consultation requirements.

AUTHORITY: 42 U.S.C. 4321–4347; 42 U.S.C. 4371–4375; 42 U.S.C. 7609; E.O. 11514, 35 FR 4247, 3 CFR, 1966–1970, Comp., p. 902, as amended by E.O. 11991, 42 FR 26967, 3 CFR, 1977 Comp., p. 123; and E.O. 13807, 82 FR 40463, 3 CFR, 2017, Comp., p. 369.

SOURCE: 85 FR 43363, July 16, 2020, unless otherwise noted.

§ 1502.1 Purpose of environmental impact statement.

The primary purpose of an environmental impact statement prepared pursuant to section 102(2)(C) of NEPA is to ensure agencies consider the environmental impacts of their actions in decision making. It shall provide full and fair discussion of significant environmental impacts and shall inform decision makers and the public of reasonable alternatives that would avoid or minimize adverse impacts or enhance the quality of the human environment. Agencies shall focus on significant environmental issues and alternatives and shall reduce paperwork and the accumulation of extraneous background data. Statements shall be concise, clear, and to the point, and shall be supported by evidence that the agency

has made the necessary environmental analyses. An environmental impact statement is a document that informs Federal agency decision making and the public.

§ 1502.2 Implementation.

(a) Environmental impact statements shall not be encyclopedic.

(b) Environmental impact statements shall discuss impacts in proportion to their significance. There shall be only brief discussion of other than significant issues. As in a finding of no significant impact, there should be only enough discussion to show why more study is not warranted.

(c) Environmental impact statements shall be analytic, concise, and no longer than necessary to comply with NEPA and with the regulations in this subchapter. Length should be proportional to potential environmental effects and project size.

(d) Environmental impact statements shall state how alternatives considered in it and decisions based on it will or will not achieve the requirements of sections 101 and 102(1) of NEPA as interpreted in the regulations in this subchapter and other environmental laws and policies.

(e) The range of alternatives discussed in environmental impact statements shall encompass those to be considered by the decision maker.

(f) Agencies shall not commit resources prejudicing selection of alternatives before making a final decision (*see also* § 1506.1 of this chapter).

(g) Environmental impact statements shall serve as the means of assessing the environmental impact of proposed agency actions, rather than justifying decisions already made.

§ 1502.3 Statutory requirements for statements.

As required by section 102(2)(C) of NEPA, environmental impact statements are to be included in every Federal agency recommendation or report on proposals for legislation and other major Federal actions significantly affecting the quality of the human environment.

§ 1502.4 Major Federal actions requiring the preparation of environmental impact statements.

(a) Agencies shall define the proposal that is the subject of an environmental impact statement based on the statutory authorities for the proposed action. Agencies shall use the criteria for scope (§ 1501.9(e) of this chapter) to determine which proposal(s) shall be the subject of a particular statement. Agencies shall evaluate in a single environmental impact statement proposals or parts of proposals that are related to each other closely enough to be, in effect, a single course of action.

(b) Environmental impact statements may be prepared for programmatic Federal actions, such as the adoption of new agency programs. When agencies prepare such statements, they should be relevant to the program decision and timed to coincide with meaningful points in agency planning and decision making.

(1) When preparing statements on programmatic actions (including proposals by more than one agency), agencies may find it useful to evaluate the proposal(s) in one of the following ways:

(i) Geographically, including actions occurring in the same general location, such as body of water, region, or metropolitan area.

(ii) Generically, including actions that have relevant similarities, such as common timing, impacts, alternatives, methods of implementation, media, or subject matter.

(iii) By stage of technological development including Federal or federally assisted research, development or demonstration programs for new technologies that, if applied, could significantly affect the quality of the human environment. Statements on such programs should be available before the program has reached a stage of investment or commitment to implementation likely to determine subsequent development or restrict later alternatives.

(2) Agencies shall as appropriate employ scoping (§ 1501.9 of this chapter), tiering (§ 1501.11 of this chapter), and other methods listed in §§ 1500.4 and 1500.5 of this chapter to relate programmatic and narrow actions and to

avoid duplication and delay. Agencies may tier their environmental analyses to defer detailed analysis of environmental impacts of specific program elements until such program elements are ripe for final agency action.

§ 1502.5 Timing.

An agency should commence preparation of an environmental impact statement as close as practicable to the time the agency is developing or receives a proposal so that preparation can be completed in time for the final statement to be included in any recommendation or report on the proposal. The statement shall be prepared early enough so that it can serve as an important practical contribution to the decision-making process and will not be used to rationalize or justify decisions already made (§§ 1501.2 of this chapter and 1502.2). For instance:

(a) For projects directly undertaken by Federal agencies, the agency shall prepare the environmental impact statement at the feasibility analysis (go/no-go) stage and may supplement it at a later stage, if necessary.

(b) For applications to the agency requiring an environmental impact statement, the agency shall commence the statement as soon as practicable after receiving the application. Federal agencies should work with potential applicants and applicable State, Tribal, and local agencies and governments prior to receipt of the application.

(c) For adjudication, the final environmental impact statement shall normally precede the final staff recommendation and that portion of the public hearing related to the impact study. In appropriate circumstances, the statement may follow preliminary hearings designed to gather information for use in the statements.

(d) For informal rulemaking, the draft environmental impact statement shall normally accompany the proposed rule.

§ 1502.6 Interdisciplinary preparation.

Agencies shall prepare environmental impact statements using an interdisciplinary approach that will ensure the integrated use of the natural and social sciences and the environmental design arts (section 102(2)(A) of NEPA). The disciplines of the preparers shall be appropriate to the scope and issues identified in the scoping process (§ 1501.9 of this chapter).

§ 1502.7 Page limits.

The text of final environmental impact statements (paragraphs (a)(4) through (6) of § 1502.10) shall be 150 pages or fewer and, for proposals of unusual scope or complexity, shall be 300 pages or fewer unless a senior agency official of the lead agency approves in writing a statement to exceed 300 pages and establishes a new page limit.

§ 1502.8 Writing.

Agencies shall write environmental impact statements in plain language and may use appropriate graphics so that decision makers and the public can readily understand such statements. Agencies should employ writers of clear prose or editors to write, review, or edit statements, which shall be based upon the analysis and supporting data from the natural and social sciences and the environmental design arts.

§ 1502.9 Draft, final, and supplemental statements.

(a) *Generally*. Except for proposals for legislation as provided in § 1506.8 of this chapter, agencies shall prepare environmental impact statements in two stages and, where necessary, supplement them, as provided in paragraph (d)(1) of this section.

(b) *Draft environmental impact statements*. Agencies shall prepare draft environmental impact statements in accordance with the scope decided upon in the scoping process (§ 1501.9 of this chapter). The lead agency shall work with the cooperating agencies and shall obtain comments as required in part 1503 of this chapter. To the fullest extent practicable, the draft statement must meet the requirements established for final statements in section 102(2)(C) of NEPA as interpreted in the regulations in this subchapter. If a draft statement is so inadequate as to preclude meaningful analysis, the agency shall prepare and publish a supplemental draft of the appropriate portion. At appropriate points in the draft statement, the agency shall discuss all

major points of view on the environmental impacts of the alternatives including the proposed action.

(c) *Final environmental impact statements.* Final environmental impact statements shall address comments as required in part 1503 of this chapter. At appropriate points in the final statement, the agency shall discuss any responsible opposing view that was not adequately discussed in the draft statement and shall indicate the agency's response to the issues raised.

(d) *Supplemental environmental impact statements.* Agencies:

(1) Shall prepare supplements to either draft or final environmental impact statements if a major Federal action remains to occur, and:

(i) The agency makes substantial changes to the proposed action that are relevant to environmental concerns; or

(ii) There are significant new circumstances or information relevant to environmental concerns and bearing on the proposed action or its impacts.

(2) May also prepare supplements when the agency determines that the purposes of the Act will be furthered by doing so.

(3) Shall prepare, publish, and file a supplement to a statement (exclusive of scoping (§ 1501.9 of this chapter)) as a draft and final statement, as is appropriate to the stage of the statement involved, unless the Council approves alternative procedures (§ 1506.12 of this chapter).

(4) May find that changes to the proposed action or new circumstances or information relevant to environmental concerns are not significant and therefore do not require a supplement. The agency should document the finding consistent with its agency NEPA procedures (§ 1507.3 of this chapter), or, if necessary, in a finding of no significant impact supported by an environmental assessment.

§ 1502.10 Recommended format.

(a) Agencies shall use a format for environmental impact statements that will encourage good analysis and clear presentation of the alternatives including the proposed action. Agencies should use the following standard format for environmental impact statements unless the agency determines that there is a more effective format for communication:

(1) Cover.

(2) Summary.

(3) Table of contents.

(4) Purpose of and need for action.

(5) Alternatives including the proposed action (sections 102(2)(C)(iii) and 102(2)(E) of NEPA).

(6) Affected environment and environmental consequences (especially sections 102(2)(C)(i), (ii), (iv), and (v) of NEPA).

(7) Submitted alternatives, information, and analyses.

(8) List of preparers.

(9) Appendices (if any).

(b) If an agency uses a different format, it shall include paragraphs (a)(1) through (8) of this section, as further described in §§ 1502.11 through 1502.19, in any appropriate format.

§ 1502.11 Cover.

The cover shall not exceed one page and include:

(a) A list of the responsible agencies, including the lead agency and any cooperating agencies.

(b) The title of the proposed action that is the subject of the statement (and, if appropriate, the titles of related cooperating agency actions), together with the State(s) and county(ies) (or other jurisdiction(s), if applicable) where the action is located.

(c) The name, address, and telephone number of the person at the agency who can supply further information.

(d) A designation of the statement as a draft, final, or draft or final supplement.

(e) A one-paragraph abstract of the statement.

(f) The date by which the agency must receive comments (computed in cooperation with EPA under § 1506.11 of this chapter).

(g) For the final environmental impact statement, the estimated total cost to prepare both the draft and final environmental impact statement, including the costs of agency full-time equivalent (FTE) personnel hours, contractor costs, and other direct costs. If practicable and noted where not practicable, agencies also should include

costs incurred by cooperating and participating agencies, applicants, and contractors.

§ 1502.12 Summary.

Each environmental impact statement shall contain a summary that adequately and accurately summarizes the statement. The summary shall stress the major conclusions, areas of disputed issues raised by agencies and the public, and the issues to be resolved (including the choice among alternatives). The summary normally will not exceed 15 pages.

§ 1502.13 Purpose and need.

The statement shall briefly specify the underlying purpose and need for the proposed action. When an agency's statutory duty is to review an application for authorization, the agency shall base the purpose and need on the goals of the applicant and the agency's authority.

§ 1502.14 Alternatives including the proposed action.

The alternatives section should present the environmental impacts of the proposed action and the alternatives in comparative form based on the information and analysis presented in the sections on the affected environment (§ 1502.15) and the environmental consequences (§ 1502.16). In this section, agencies shall:

(a) Evaluate reasonable alternatives to the proposed action, and, for alternatives that the agency eliminated from detailed study, briefly discuss the reasons for their elimination.

(b) Discuss each alternative considered in detail, including the proposed action, so that reviewers may evaluate their comparative merits.

(c) Include the no action alternative.

(d) Identify the agency's preferred alternative or alternatives, if one or more exists, in the draft statement and identify such alternative in the final statement unless another law prohibits the expression of such a preference.

(e) Include appropriate mitigation measures not already included in the proposed action or alternatives.

(f) Limit their consideration to a reasonable number of alternatives.

§ 1502.15 Affected environment.

The environmental impact statement shall succinctly describe the environment of the area(s) to be affected or created by the alternatives under consideration, including the reasonably foreseeable environmental trends and planned actions in the area(s). The environmental impact statement may combine the description with evaluation of the environmental consequences (§ 1502.16), and it shall be no longer than is necessary to understand the effects of the alternatives. Data and analyses in a statement shall be commensurate with the importance of the impact, with less important material summarized, consolidated, or simply referenced. Agencies shall avoid useless bulk in statements and shall concentrate effort and attention on important issues. Verbose descriptions of the affected environment are themselves no measure of the adequacy of an environmental impact statement.

§ 1502.16 Environmental consequences.

(a) The environmental consequences section forms the scientific and analytic basis for the comparisons under § 1502.14. It shall consolidate the discussions of those elements required by sections 102(2)(C)(i), (ii), (iv), and (v) of NEPA that are within the scope of the statement and as much of section 102(2)(C)(iii) of NEPA as is necessary to support the comparisons. This section should not duplicate discussions in § 1502.14. The discussion shall include:

(1) The environmental impacts of the proposed action and reasonable alternatives to the proposed action and the significance of those impacts. The comparison of the proposed action and reasonable alternatives shall be based on this discussion of the impacts.

(2) Any adverse environmental effects that cannot be avoided should the proposal be implemented.

(3) The relationship between short-term uses of man's environment and the maintenance and enhancement of long-term productivity.

(4) Any irreversible or irretrievable commitments of resources that would be involved in the proposal should it be implemented.

(5) Possible conflicts between the proposed action and the objectives of

Federal, regional, State, Tribal, and local land use plans, policies and controls for the area concerned. (§ 1506.2(d) of this chapter)

(6) Energy requirements and conservation potential of various alternatives and mitigation measures.

(7) Natural or depletable resource requirements and conservation potential of various alternatives and mitigation measures.

(8) Urban quality, historic and cultural resources, and the design of the built environment, including the reuse and conservation potential of various alternatives and mitigation measures.

(9) Means to mitigate adverse environmental impacts (if not fully covered under § 1502.14(e)).

(10) Where applicable, economic and technical considerations, including the economic benefits of the proposed action.

(b) Economic or social effects by themselves do not require preparation of an environmental impact statement. However, when the agency determines that economic or social and natural or physical environmental effects are interrelated, the environmental impact statement shall discuss and give appropriate consideration to these effects on the human environment.

§ 1502.17 Summary of submitted alternatives, information, and analyses.

(a) The draft environmental impact statement shall include a summary that identifies all alternatives, information, and analyses submitted by State, Tribal, and local governments and other public commenters during the scoping process for consideration by the lead and cooperating agencies in developing the environmental impact statement.

(1) The agency shall append to the draft environmental impact statement or otherwise publish all comments (or summaries thereof where the response has been exceptionally voluminous) received during the scoping process that identified alternatives, information, and analyses for the agency's consideration.

(2) Consistent with § 1503.1(a)(3) of this chapter, the lead agency shall invite comment on the summary identifying all submitted alternatives, information, and analyses in the draft environmental impact statement.

(b) The final environmental impact statement shall include a summary that identifies all alternatives, information, and analyses submitted by State, Tribal, and local governments and other public commenters for consideration by the lead and cooperating agencies in developing the final environmental impact statement.

§ 1502.18 List of preparers.

The environmental impact statement shall list the names, together with their qualifications (expertise, experience, professional disciplines), of the persons who were primarily responsible for preparing the environmental impact statement or significant background papers, including basic components of the statement. Where possible, the environmental impact statement shall identify the persons who are responsible for a particular analysis, including analyses in background papers. Normally the list will not exceed two pages.

§ 1502.19 Appendix.

If an agency prepares an appendix, the agency shall publish it with the environmental impact statement, and it shall consist of:

(a) Material prepared in connection with an environmental impact statement (as distinct from material that is not so prepared and is incorporated by reference (§ 1501.12 of this chapter)).

(b) Material substantiating any analysis fundamental to the impact statement.

(c) Material relevant to the decision to be made.

(d) For draft environmental impact statements, all comments (or summaries thereof where the response has been exceptionally voluminous) received during the scoping process that identified alternatives, information, and analyses for the agency's consideration.

(e) For final environmental impact statements, the comment summaries and responses consistent with § 1503.4 of this chapter.

§ 1502.20 Publication of the environmental impact statement.

Agencies shall publish the entire draft and final environmental impact statements and unchanged statements as provided in § 1503.4(c) of this chapter. The agency shall transmit the entire statement electronically (or in paper copy, if so requested due to economic or other hardship) to:

(a) Any Federal agency that has jurisdiction by law or special expertise with respect to any environmental impact involved and any appropriate Federal, State, Tribal, or local agency authorized to develop and enforce environmental standards.

(b) The applicant, if any.

(c) Any person, organization, or agency requesting the entire environmental impact statement.

(d) In the case of a final environmental impact statement, any person, organization, or agency that submitted substantive comments on the draft.

§ 1502.21 Incomplete or unavailable information.

(a) When an agency is evaluating reasonably foreseeable significant adverse effects on the human environment in an environmental impact statement, and there is incomplete or unavailable information, the agency shall make clear that such information is lacking.

(b) If the incomplete but available information relevant to reasonably foreseeable significant adverse impacts is essential to a reasoned choice among alternatives, and the overall costs of obtaining it are not unreasonable, the agency shall include the information in the environmental impact statement.

(c) If the information relevant to reasonably foreseeable significant adverse impacts cannot be obtained because the overall costs of obtaining it are unreasonable or the means to obtain it are not known, the agency shall include within the environmental impact statement:

(1) A statement that such information is incomplete or unavailable;

(2) A statement of the relevance of the incomplete or unavailable information to evaluating reasonably foreseeable significant adverse impacts on the human environment;

(3) A summary of existing credible scientific evidence that is relevant to evaluating the reasonably foreseeable significant adverse impacts on the human environment; and

(4) The agency's evaluation of such impacts based upon theoretical approaches or research methods generally accepted in the scientific community.

(d) For the purposes of this section, ''reasonably foreseeable'' includes impacts that have catastrophic consequences, even if their probability of occurrence is low, provided that the analysis of the impacts is supported by credible scientific evidence, is not based on pure conjecture, and is within the rule of reason.

§ 1502.22 Cost-benefit analysis.

If the agency is considering a cost-benefit analysis for the proposed action relevant to the choice among alternatives with different environmental effects, the agency shall incorporate the cost-benefit analysis by reference or append it to the statement as an aid in evaluating the environmental consequences. In such cases, to assess the adequacy of compliance with section 102(2)(B) of NEPA (ensuring appropriate consideration of unquantified environmental amenities and values in decision making, along with economical and technical considerations), the statement shall discuss the relationship between that analysis and any analyses of unquantified environmental impacts, values, and amenities. For purposes of complying with the Act, agencies need not display the weighing of the merits and drawbacks of the various alternatives in a monetary cost-benefit analysis and should not do so when there are important qualitative considerations. However, an environmental impact statement should at least indicate those considerations, including factors not related to environmental quality, that are likely to be relevant and important to a decision.

§ 1502.23 Methodology and scientific accuracy.

Agencies shall ensure the professional integrity, including scientific integrity, of the discussions and analyses in environmental documents.

Agencies shall make use of reliable existing data and resources. Agencies may make use of any reliable data sources, such as remotely gathered information or statistical models. They shall identify any methodologies used and shall make explicit reference to the scientific and other sources relied upon for conclusions in the statement. Agencies may place discussion of methodology in an appendix. Agencies are not required to undertake new scientific and technical research to inform their analyses. Nothing in this section is intended to prohibit agencies from compliance with the requirements of other statutes pertaining to scientific and technical research.

§ 1502.24 Environmental review and consultation requirements.

(a) To the fullest extent possible, agencies shall prepare draft environmental impact statements concurrent and integrated with environmental impact analyses and related surveys and studies required by all other Federal environmental review laws and Executive orders applicable to the proposed action, including the Fish and Wildlife Coordination Act (16 U.S.C. 661 *et seq.*), the National Historic Preservation Act of 1966 (54 U.S.C. 300101 *et seq.*), and the Endangered Species Act of 1973 (16 U.S.C. 1531 *et seq.*).

(b) The draft environmental impact statement shall list all Federal permits, licenses, and other authorizations that must be obtained in implementing the proposal. If it is uncertain whether a Federal permit, license, or other authorization is necessary, the draft environmental impact statement shall so indicate.

PART 1503—COMMENTING ON ENVIRONMENTAL IMPACT STATEMENTS

Sec.

1503.1 Inviting comments and requesting information and analyses.
1503.2 Duty to comment.
1503.3 Specificity of comments and information.
1503.4 Response to comments.

AUTHORITY: 42 U.S.C. 4321–4347; 42 U.S.C. 4371–4375; 42 U.S.C. 7609; E.O. 11514, 35 FR 4247, 3 CFR, 1966–1970, Comp., p. 902, as amended by E.O. 11991, 42 FR 26967, 3 CFR, 1977 Comp., p. 123; E.O. 13807, 82 FR 40463, 3 CFR, 2017, Comp., p. 369.

SOURCE: 85 FR 43367, July 16, 2020, unless otherwise noted.

§ 1503.1 Inviting comments and requesting information and analyses.

(a) After preparing a draft environmental impact statement and before preparing a final environmental impact statement the agency shall:

(1) Obtain the comments of any Federal agency that has jurisdiction by law or special expertise with respect to any environmental impact involved or is authorized to develop and enforce environmental standards.

(2) Request the comments of:

(i) Appropriate State, Tribal, and local agencies that are authorized to develop and enforce environmental standards;

(ii) State, Tribal, or local governments that may be affected by the proposed action;

(iii) Any agency that has requested it receive statements on actions of the kind proposed;

(iv) The applicant, if any; and

(v) The public, affirmatively soliciting comments in a manner designed to inform those persons or organizations who may be interested in or affected by the proposed action.

(3) Invite comment specifically on the submitted alternatives, information, and analyses and the summary thereof (§ 1502.17 of this chapter).

(b) An agency may request comments on a final environmental impact statement before the final decision and set a deadline for providing such comments. Other agencies or persons may make comments consistent with the time periods under § 1506.11 of this chapter.

(c) An agency shall provide for electronic submission of public comments, with reasonable measures to ensure the comment process is accessible to affected persons.

§ 1503.2 Duty to comment.

Cooperating agencies and agencies that are authorized to develop and enforce environmental standards shall comment on statements within their jurisdiction, expertise, or authority within the time period specified for

comment in § 1506.11 of this chapter. A Federal agency may reply that it has no comment. If a cooperating agency is satisfied that the environmental impact statement adequately reflects its views, it should reply that it has no comment.

§ 1503.3 Specificity of comments and information.

(a) To promote informed decision making, comments on an environmental impact statement or on a proposed action shall be as specific as possible, may address either the adequacy of the statement or the merits of the alternatives discussed or both, and shall provide as much detail as necessary to meaningfully participate and fully inform the agency of the commenter's position. Comments should explain why the issues raised are important to the consideration of potential environmental impacts and alternatives to the proposed action, as well as economic and employment impacts, and other impacts affecting the quality of the human environment. Comments should reference the corresponding section or page number of the draft environmental impact statement, propose specific changes to those parts of the statement, where possible, and include or describe the data sources and methodologies supporting the proposed changes.

(b) Comments on the submitted alternatives, information, and analyses and summary thereof (§ 1502.17 of this chapter) should be as specific as possible. Comments and objections of any kind shall be raised within the comment period on the draft environmental impact statement provided by the agency, consistent with § 1506.11 of this chapter. If the agency requests comments on the final environmental impact statement before the final decision, consistent with § 1503.1(b), comments and objections of any kind shall be raised within the comment period provided by the agency. Comments and objections of any kind not provided within the comment period(s) shall be considered unexhausted and forfeited, consistent with § 1500.3(b) of this chapter.

(c) When a participating agency criticizes a lead agency's predictive methodology, the participating agency should describe the alternative methodology that it prefers and why.

(d) A cooperating agency shall specify in its comments whether it needs additional information to fulfill other applicable environmental reviews or consultation requirements and what information it needs. In particular, it shall specify any additional information it needs to comment adequately on the draft statement's analysis of significant site-specific effects associated with the granting or approving by that cooperating agency of necessary Federal permits, licenses, or authorizations.

(e) When a cooperating agency with jurisdiction by law specifies mitigation measures it considers necessary to allow the agency to grant or approve applicable permit, license, or related requirements or concurrences, the cooperating agency shall cite to its applicable statutory authority.

§ 1503.4 Response to comments.

(a) An agency preparing a final environmental impact statement shall consider substantive comments timely submitted during the public comment period. The agency may respond to individual comments or groups of comments. In the final environmental impact statement, the agency may respond by:

(1) Modifying alternatives including the proposed action.

(2) Developing and evaluating alternatives not previously given serious consideration by the agency.

(3) Supplementing, improving, or modifying its analyses.

(4) Making factual corrections.

(5) Explaining why the comments do not warrant further agency response, recognizing that agencies are not required to respond to each comment.

(b) An agency shall append or otherwise publish all substantive comments received on the draft statement (or summaries thereof where the response has been exceptionally voluminous).

(c) If changes in response to comments are minor and are confined to the responses described in paragraphs (a)(4) and (5) of this section, an agency may write any changes on errata sheets and attach the responses to the statement instead of rewriting the

draft statement. In such cases, only the comments, the responses, and the changes and not the final statement need be published (§ 1502.20 of this chapter). The agency shall file the entire document with a new cover sheet with the Environmental Protection Agency as the final statement (§ 1506.10 of this chapter).

PART 1504—PRE–DECISIONAL REFERRALS TO THE COUNCIL OF PROPOSED FEDERAL ACTIONS DETERMINED TO BE ENVIRONMENTALLY UNSATISFACTORY

Sec.
1504.1 Purpose.
1504.2 Criteria for referral.
1504.3 Procedure for referrals and response.

AUTHORITY: 42 U.S.C. 4321–4347; 42 U.S.C. 4371–4375; 42 U.S.C. 7609; E.O. 11514, 35 FR 4247, 3 CFR, 1966–1970, Comp., p. 902, as amended by E.O. 11991, 42 FR 26967, 3 CFR, 1977 Comp., p. 123; E.O. 13807, 82 FR 40463, 3 CFR, 2017, Comp., p. 369.

SOURCE: 85 FR 43368, July 16, 2020, unless otherwise noted.

§ 1504.1 Purpose.

(a) This part establishes procedures for referring to the Council Federal interagency disagreements concerning proposed major Federal actions that might cause unsatisfactory environmental effects. It provides means for early resolution of such disagreements.

(b) Section 309 of the Clean Air Act (42 U.S.C. 7609) directs the Administrator of the Environmental Protection Agency to review and comment publicly on the environmental impacts of Federal activities, including actions for which agencies prepare environmental impact statements. If, after this review, the Administrator determines that the matter is ''unsatisfactory from the standpoint of public health or welfare or environmental quality,'' section 309 directs that the matter be referred to the Council (hereafter ''environmental referrals'').

(c) Under section 102(2)(C) of NEPA (42 U.S.C. 4332(2)(C)), other Federal agencies may prepare similar reviews of environmental impact statements, including judgments on the acceptability of anticipated environmental impacts. These reviews must be made available to the President, the Council, and the public.

§ 1504.2 Criteria for referral.

Environmental referrals should be made to the Council only after concerted, timely (as early as practicable in the process), but unsuccessful attempts to resolve differences with the lead agency. In determining what environmental objections to the matter are appropriate to refer to the Council, an agency should weigh potential adverse environmental impacts, considering:

(a) Possible violation of national environmental standards or policies;

(b) Severity;

(c) Geographical scope;

(d) Duration;

(e) Importance as precedents;

(f) Availability of environmentally preferable alternatives; and

(g) Economic and technical considerations, including the economic costs of delaying or impeding the decision making of the agencies involved in the action.

§ 1504.3 Procedure for referrals and response.

(a) A Federal agency making the referral to the Council shall:

(1) Notify the lead agency at the earliest possible time that it intends to refer a matter to the Council unless a satisfactory agreement is reached;

(2) Include such a notification whenever practicable in the referring agency's comments on the environmental assessment or draft environmental impact statement;

(3) Identify any essential information that is lacking and request that the lead agency make it available at the earliest possible time; and

(4) Send copies of the referring agency's views to the Council.

(b) The referring agency shall deliver its referral to the Council no later than 25 days after the lead agency has made the final environmental impact statement available to the Environmental Protection Agency, participating agencies, and the public, and in the case of an environmental assessment, no later than 25 days after the lead agency makes it available. Except when the lead agency grants an extension of this

period, the Council will not accept a referral after that date.

(c) The referral shall consist of:

(1) A copy of the letter signed by the head of the referring agency and delivered to the lead agency informing the lead agency of the referral and the reasons for it; and

(2) A statement supported by factual evidence leading to the conclusion that the matter is unsatisfactory from the standpoint of public health or welfare or environmental quality. The statement shall:

(i) Identify any disputed material facts and incorporate (by reference if appropriate) agreed upon facts;

(ii) Identify any existing environmental requirements or policies that would be violated by the matter;

(iii) Present the reasons for the referral;

(iv) Contain a finding by the agency whether the issue raised is of national importance because of the threat to national environmental resources or policies or for some other reason;

(v) Review the steps taken by the referring agency to bring its concerns to the attention of the lead agency at the earliest possible time; and

(vi) Give the referring agency's recommendations as to what mitigation alternative, further study, or other course of action (including abandonment of the matter) are necessary to remedy the situation.

(d) No later than 25 days after the referral to the Council, the lead agency may deliver a response to the Council and the referring agency. If the lead agency requests more time and gives assurance that the matter will not go forward in the interim, the Council may grant an extension. The response shall:

(1) Address fully the issues raised in the referral;

(2) Be supported by evidence and explanations, as appropriate; and

(3) Give the lead agency's response to the referring agency's recommendations.

(e) Applicants may provide views in writing to the Council no later than the response.

(f) No later than 25 days after receipt of both the referral and any response or upon being informed that there will be no response (unless the lead agency agrees to a longer time), the Council may take one or more of the following actions:

(1) Conclude that the process of referral and response has successfully resolved the problem.

(2) Initiate discussions with the agencies with the objective of mediation with referring and lead agencies.

(3) Obtain additional views and information.

(4) Determine that the issue is not one of national importance and request the referring and lead agencies to pursue their decision process.

(5) Determine that the referring and lead agencies should further negotiate the issue, and the issue is not appropriate for Council consideration until one or more heads of agencies report to the Council that the agencies' disagreements are irreconcilable.

(6) Publish its findings and recommendations (including, where appropriate, a finding that the submitted evidence does not support the position of an agency).

(7) When appropriate, submit the referral and the response together with the Council's recommendation to the President for action.

(g) The Council shall take no longer than 60 days to complete the actions specified in paragraph (f)(2), (3), or (5) of this section.

(h) The referral process is not intended to create any private rights of action or to be judicially reviewable because any voluntary resolutions by the agency parties do not represent final agency action and instead are only provisional and dependent on later consistent action by the action agencies.

PART 1505—NEPA AND AGENCY DECISION MAKING

Sec.
1505.1 [Reserved]
1505.2 Record of decision in cases requiring environmental impact statements.
1505.3 Implementing the decision.

AUTHORITY: 42 U.S.C. 4321–4347; 42 U.S.C. 4371–4375; 42 U.S.C. 7609; E.O. 11514, 35 FR 4247, 3 CFR, 1966–1970, Comp., p. 902, as amended by E.O. 11991, 42 FR 26967, 3 CFR, 1977 Comp., p. 123; and E.O. 13807, 82 FR 40463, 3 CFR, 2017, Comp., p. 369.

SOURCE: 85 FR 43369, July 16, 2020, unless otherwise noted.

§ 1505.1 [Reserved]

§ 1505.2 Record of decision in cases requiring environmental impact statements.

(a) At the time of its decision (§ 1506.11 of this chapter) or, if appropriate, its recommendation to Congress, each agency shall prepare and timely publish a concise public record of decision or joint record of decision. The record, which each agency may integrate into any other record it prepares, shall:

(1) State the decision.

(2) Identify alternatives considered by the agency in reaching its decision, specifying the alternative or alternatives considered environmentally preferable. An agency may discuss preferences among alternatives based on relevant factors including economic and technical considerations and agency statutory missions. An agency shall identify and discuss all such factors, including any essential considerations of national policy, that the agency balanced in making its decision and state how those considerations entered into its decision.

(3) State whether the agency has adopted all practicable means to avoid or minimize environmental harm from the alternative selected, and if not, why the agency did not. The agency shall adopt and summarize, where applicable, a monitoring and enforcement program for any enforceable mitigation requirements or commitments.

(b) Informed by the summary of the submitted alternatives, information, and analyses in the final environmental impact statement (§ 1502.17(b) of this chapter), together with any other material in the record that he or she determines to be relevant, the decision maker shall certify in the record of decision that the agency has considered all of the alternatives, information, analyses, and objections submitted by State, Tribal, and local governments and public commenters for consideration by the lead and cooperating agencies in developing the environmental impact statement. Agency environmental impact statements certified in accordance with this section are entitled to a presumption that the agency has considered the submitted alternatives, information, and analyses, including the summary thereof, in the final environmental impact statement (§ 1502.17(b)).

§ 1505.3 Implementing the decision.

Agencies may provide for monitoring to assure that their decisions are carried out and should do so in important cases. Mitigation (§ 1505.2(a)(3)) and other conditions established in the environmental impact statement or during its review and committed as part of the decision shall be implemented by the lead agency or other appropriate consenting agency. The lead agency shall:

(a) Include appropriate conditions in grants, permits, or other approvals.

(b) Condition funding of actions on mitigation.

(c) Upon request, inform cooperating or participating agencies on progress in carrying out mitigation measures that they have proposed and were adopted by the agency making the decision.

(d) Upon request, publish the results of relevant monitoring.

PART 1506—OTHER REQUIREMENTS OF NEPA

Sec.

1506.1 Limitations on actions during NEPA process.
1506.2 Elimination of duplication with State, Tribal, and local procedures.
1506.3 Adoption.
1506.4 Combining documents.
1506.5 Agency responsibility for environmental documents.
1506.6 Public involvement.
1506.7 Further guidance.
1506.8 Proposals for legislation.
1506.9 Proposals for regulations.
1506.10 Filing requirements.
1506.11 Timing of agency action.
1506.12 Emergencies.
1506.13 Effective date.

AUTHORITY: 42 U.S.C. 4321–4347; 42 U.S.C. 4371–4375; 42 U.S.C. 7609; E.O. 11514, 35 FR 4247, 3 CFR, 1966–1970, Comp., p. 902, as amended by E.O. 11991, 42 FR 26967, 3 CFR, 1977 Comp., p. 123; and E.O. 13807, 82 FR 40463, 3 CFR, 2017, Comp., p. 369.

SOURCE: 85 FR 43370, July 16, 2020, unless otherwise noted.

§ 1506.1 Limitations on actions during NEPA process.

(a) Except as provided in paragraphs (b) and (c) of this section, until an agency issues a finding of no significant impact, as provided in § 1501.6 of this chapter, or record of decision, as provided in § 1505.2 of this chapter, no action concerning the proposal may be taken that would:

(1) Have an adverse environmental impact; or

(2) Limit the choice of reasonable alternatives.

(b) If any agency is considering an application from a non-Federal entity and is aware that the applicant is about to take an action within the agency's jurisdiction that would meet either of the criteria in paragraph (a) of this section, then the agency shall promptly notify the applicant that the agency will take appropriate action to ensure that the objectives and procedures of NEPA are achieved. This section does not preclude development by applicants of plans or designs or performance of other activities necessary to support an application for Federal, State, Tribal, or local permits or assistance. An agency considering a proposed action for Federal funding may authorize such activities, including, but not limited to, acquisition of interests in land (*e.g.*, fee simple, rights-of-way, and conservation easements), purchase of long lead-time equipment, and purchase options made by applicants.

(c) While work on a required programmatic environmental review is in progress and the action is not covered by an existing programmatic review, agencies shall not undertake in the interim any major Federal action covered by the program that may significantly affect the quality of the human environment unless such action:

(1) Is justified independently of the program;

(2) Is itself accompanied by an adequate environmental review; and

(3) Will not prejudice the ultimate decision on the program. Interim action prejudices the ultimate decision on the program when it tends to determine subsequent development or limit alternatives.

§ 1506.2 Elimination of duplication with State, Tribal, and local procedures.

(a) Federal agencies are authorized to cooperate with State, Tribal, and local agencies that are responsible for preparing environmental documents, including those prepared pursuant to section 102(2)(D) of NEPA.

(b) To the fullest extent practicable unless specifically prohibited by law, agencies shall cooperate with State, Tribal, and local agencies to reduce duplication between NEPA and State, Tribal, and local requirements, including through use of studies, analysis, and decisions developed by State, Tribal, or local agencies. Except for cases covered by paragraph (a) of this section, such cooperation shall include, to the fullest extent practicable:

(1) Joint planning processes.

(2) Joint environmental research and studies.

(3) Joint public hearings (except where otherwise provided by statute).

(4) Joint environmental assessments.

(c) To the fullest extent practicable unless specifically prohibited by law, agencies shall cooperate with State, Tribal, and local agencies to reduce duplication between NEPA and comparable State, Tribal, and local requirements. Such cooperation shall include, to the fullest extent practicable, joint environmental impact statements. In such cases, one or more Federal agencies and one or more State, Tribal, or local agencies shall be joint lead agencies. Where State or Tribal laws or local ordinances have environmental impact statement or similar requirements in addition to but not in conflict with those in NEPA, Federal agencies may cooperate in fulfilling these requirements, as well as those of Federal laws, so that one document will comply with all applicable laws.

(d) To better integrate environmental impact statements into State, Tribal, or local planning processes, environmental impact statements shall discuss any inconsistency of a proposed action with any approved State, Tribal, or local plan or law (whether or not federally sanctioned). Where an inconsistency exists, the statement should describe the extent to which the agency would reconcile its proposed action

with the plan or law. While the statement should discuss any inconsistencies, NEPA does not require reconciliation.

§ 1506.3 Adoption.

(a) *Generally*. An agency may adopt a Federal draft or final environmental impact statement, environmental assessment, or portion thereof, or categorical exclusion determination provided that the statement, assessment, portion thereof, or determination meets the standards for an adequate statement, assessment, or determination under the regulations in this subchapter.

(b) *Environmental impact statements*. (1) If the actions covered by the original environmental impact statement and the proposed action are substantially the same, the adopting agency shall republish it as a final statement consistent with § 1506.10. If the actions are not substantially the same, the adopting agency shall treat the statement as a draft and republish it, consistent with § 1506.10.

(2) Notwithstanding paragraph (b)(1) of this section, a cooperating agency may adopt in its record of decision without republishing the environmental impact statement of a lead agency when, after an independent review of the statement, the cooperating agency concludes that its comments and suggestions have been satisfied.

(c) *Environmental assessments*. If the actions covered by the original environmental assessment and the proposed action are substantially the same, the adopting agency may adopt the environmental assessment in its finding of no significant impact and provide notice consistent with § 1501.6 of this chapter.

(d) *Categorical exclusions*. An agency may adopt another agency's determination that a categorical exclusion applies to a proposed action if the action covered by the original categorical exclusion determination and the adopting agency's proposed action are substantially the same. The agency shall document the adoption.

(e) *Identification of certain circumstances*. The adopting agency shall specify if one of the following circumstances is present:

(1) The agency is adopting an assessment or statement that is not final within the agency that prepared it.

(2) The action assessed in the assessment or statement is the subject of a referral under part 1504 of this chapter.

(3) The assessment or statement's adequacy is the subject of a judicial action that is not final.

§ 1506.4 Combining documents.

Agencies should combine, to the fullest extent practicable, any environmental document with any other agency document to reduce duplication and paperwork.

§ 1506.5 Agency responsibility for environmental documents.

(a) *Responsibility*. The agency is responsible for the accuracy, scope (§ 1501.9(e) of this chapter), and content of environmental documents prepared by the agency or by an applicant or contractor under the supervision of the agency.

(b) *Information*. An agency may require an applicant to submit environmental information for possible use by the agency in preparing an environmental document. An agency also may direct an applicant or authorize a contractor to prepare an environmental document under the supervision of the agency.

(1) The agency should assist the applicant by outlining the types of information required or, for the preparation of environmental documents, shall provide guidance to the applicant or contractor and participate in their preparation.

(2) The agency shall independently evaluate the information submitted or the environmental document and shall be responsible for its accuracy, scope, and contents.

(3) The agency shall include in the environmental document the names and qualifications of the persons preparing environmental documents, and conducting the independent evaluation of any information submitted or environmental documents prepared by an applicant or contractor, such as in the list of preparers for environmental impact statements (§ 1502.18 of this chapter). It is the intent of this paragraph (b)(3) that acceptable work not be

redone, but that it be verified by the agency.

(4) Contractors or applicants preparing environmental assessments or environmental impact statements shall submit a disclosure statement to the lead agency that specifies any financial or other interest in the outcome of the action. Such statement need not include privileged or confidential trade secrets or other confidential business information.

(5) Nothing in this section is intended to prohibit any agency from requesting any person, including the applicant, to submit information to it or to prohibit any person from submitting information to any agency for use in preparing environmental documents.

§ 1506.6 Public involvement.

Agencies shall:

(a) Make diligent efforts to involve the public in preparing and implementing their NEPA procedures (§ 1507.3 of this chapter).

(b) Provide public notice of NEPA-related hearings, public meetings, and other opportunities for public involvement, and the availability of environmental documents so as to inform those persons and agencies who may be interested or affected by their proposed actions. When selecting appropriate methods for providing public notice, agencies shall consider the ability of affected persons and agencies to access electronic media.

(1) In all cases, the agency shall notify those who have requested notice on an individual action.

(2) In the case of an action with effects of national concern, notice shall include publication in the FEDERAL REGISTER. An agency may notify organizations that have requested regular notice.

(3) In the case of an action with effects primarily of local concern, the notice may include:

(i) Notice to State, Tribal, and local agencies that may be interested or affected by the proposed action.

(ii) Notice to interested or affected State, Tribal, and local governments.

(iii) Following the affected State or Tribe's public notice procedures for comparable actions.

(iv) Publication in local newspapers (in papers of general circulation rather than legal papers).

(v) Notice through other local media.

(vi) Notice to potentially interested community organizations including small business associations.

(vii) Publication in newsletters that may be expected to reach potentially interested persons.

(viii) Direct mailing to owners and occupants of nearby or affected property.

(ix) Posting of notice on and off site in the area where the action is to be located.

(x) Notice through electronic media (*e.g.*, a project or agency website, email, or social media).

(c) Hold or sponsor public hearings, public meetings, or other opportunities for public involvement whenever appropriate or in accordance with statutory requirements applicable to the agency. Agencies may conduct public hearings and public meetings by means of electronic communication except where another format is required by law. When selecting appropriate methods for public involvement, agencies shall consider the ability of affected entities to access electronic media.

(d) Solicit appropriate information from the public.

(e) Explain in its procedures where interested persons can get information or status reports on environmental impact statements and other elements of the NEPA process.

(f) Make environmental impact statements, the comments received, and any underlying documents available to the public pursuant to the provisions of the Freedom of Information Act, as amended (5 U.S.C. 552).

§ 1506.7 Further guidance.

(a) The Council may provide further guidance concerning NEPA and its procedures consistent with Executive Order 13807, Establishing Discipline and Accountability in the Environmental Review and Permitting Process for Infrastructure Projects (August 5, 2017), Executive Order 13891, Promoting the Rule of Law Through Improved Agency Guidance Documents (October 9, 2019), and any other applicable Executive orders.

(b) To the extent that Council guidance issued prior to September 14, 2020 is in conflict with this subchapter, the provisions of this subchapter apply.

§ 1506.8 Proposals for legislation.

(a) When developing legislation, agencies shall integrate the NEPA process for proposals for legislation significantly affecting the quality of the human environment with the legislative process of the Congress. Technical drafting assistance does not by itself constitute a legislative proposal. Only the agency that has primary responsibility for the subject matter involved will prepare a legislative environmental impact statement.

(b) A legislative environmental impact statement is the detailed statement required by law to be included in an agency's recommendation or report on a legislative proposal to Congress. A legislative environmental impact statement shall be considered part of the formal transmittal of a legislative proposal to Congress; however, it may be transmitted to Congress up to 30 days later in order to allow time for completion of an accurate statement that can serve as the basis for public and Congressional debate. The statement must be available in time for Congressional hearings and deliberations.

(c) Preparation of a legislative environmental impact statement shall conform to the requirements of the regulations in this subchapter, except as follows:

(1) There need not be a scoping process.

(2) Agencies shall prepare the legislative statement in the same manner as a draft environmental impact statement and need not prepare a final statement unless any of the following conditions exist. In such cases, the agency shall prepare and publish the statements consistent with §§ 1503.1 of this chapter and 1506.11:

(i) A Congressional committee with jurisdiction over the proposal has a rule requiring both draft and final environmental impact statements.

(ii) The proposal results from a study process required by statute (such as those required by the Wild and Scenic Rivers Act (16 U.S.C. 1271 *et seq.*)).

(iii) Legislative approval is sought for Federal or federally assisted construction or other projects that the agency recommends be located at specific geographic locations. For proposals requiring an environmental impact statement for the acquisition of space by the General Services Administration, a draft statement shall accompany the Prospectus or the 11(b) Report of Building Project Surveys to the Congress, and a final statement shall be completed before site acquisition.

(iv) The agency decides to prepare draft and final statements.

(d) Comments on the legislative statement shall be given to the lead agency, which shall forward them along with its own responses to the Congressional committees with jurisdiction.

§ 1506.9 Proposals for regulations.

Where the proposed action is the promulgation of a rule or regulation, procedures and documentation pursuant to other statutory or Executive order requirements may satisfy one or more requirements of this subchapter. When a procedure or document satisfies one or more requirements of this subchapter, the agency may substitute it for the corresponding requirements in this subchapter and need not carry out duplicative procedures or documentation. Agencies shall identify which corresponding requirements in this subchapter are satisfied and consult with the Council to confirm such determinations.

§ 1506.10 Filing requirements.

(a) Agencies shall file environmental impact statements together with comments and responses with the Environmental Protection Agency (EPA), Office of Federal Activities, consistent with EPA's procedures.

(b) Agencies shall file statements with the EPA no earlier than they are also transmitted to participating agencies and made available to the public. EPA may issue guidelines to agencies to implement its responsibilities under this section and § 1506.11.

§ 1506.11 Timing of agency action.

(a) The Environmental Protection Agency shall publish a notice in the

FEDERAL REGISTER each week of the environmental impact statements filed since its prior notice. The minimum time periods set forth in this section are calculated from the date of publication of this notice.

(b) Unless otherwise provided by law, including statutory provisions for combining a final environmental impact statement and record of decision, Federal agencies may not make or issue a record of decision under § 1505.2 of this chapter for the proposed action until the later of the following dates:

(1) 90 days after publication of the notice described in paragraph (a) of this section for a draft environmental impact statement.

(2) 30 days after publication of the notice described in paragraph (a) of this section for a final environmental impact statement.

(c) An agency may make an exception to the rule on timing set forth in paragraph (b) of this section for a proposed action in the following circumstances:

(1) Some agencies have a formally established appeal process after publication of the final environmental impact statement that allows other agencies or the public to take appeals on a decision and make their views known. In such cases where a real opportunity exists to alter the decision, the agency may make and record the decision at the same time it publishes the environmental impact statement. This means that the period for appeal of the decision and the 30-day period set forth in paragraph (b)(2) of this section may run concurrently. In such cases, the environmental impact statement shall explain the timing and the public's right of appeal and provide notification consistent with § 1506.10; or

(2) An agency engaged in rulemaking under the Administrative Procedure Act or other statute for the purpose of protecting the public health or safety may waive the time period in paragraph (b)(2) of this section, publish a decision on the final rule simultaneously with publication of the notice of the availability of the final environmental impact statement, and provide notification consistent with § 1506.10, as described in paragraph (a) of this section.

(d) If an agency files the final environmental impact statement within 90 days of the filing of the draft environmental impact statement with the Environmental Protection Agency, the decision-making period and the 90-day period may run concurrently. However, subject to paragraph (e) of this section, agencies shall allow at least 45 days for comments on draft statements.

(e) The lead agency may extend the minimum periods in paragraph (b) of this section and provide notification consistent with § 1506.10. Upon a showing by the lead agency of compelling reasons of national policy, the Environmental Protection Agency may reduce the minimum periods and, upon a showing by any other Federal agency of compelling reasons of national policy, also may extend the minimum periods, but only after consultation with the lead agency. The lead agency may modify the minimum periods when necessary to comply with other specific statutory requirements. (§ 1507.3(f)(2) of this chapter) Failure to file timely comments shall not be a sufficient reason for extending a period. If the lead agency does not concur with the extension of time, EPA may not extend it for more than 30 days. When the Environmental Protection Agency reduces or extends any period of time it shall notify the Council.

§ 1506.12 Emergencies.

Where emergency circumstances make it necessary to take an action with significant environmental impact without observing the provisions of the regulations in this subchapter, the Federal agency taking the action should consult with the Council about alternative arrangements for compliance with section 102(2)(C) of NEPA. Agencies and the Council will limit such arrangements to actions necessary to control the immediate impacts of the emergency. Other actions remain subject to NEPA review.

§ 1506.13 Effective date.

The regulations in this subchapter apply to any NEPA process begun after September 14, 2020. An agency may

apply the regulations in this subchapter to ongoing activities and environmental documents begun before September 14, 2020.

PART 1507—AGENCY COMPLIANCE

Sec.
1507.1 Compliance.
1507.2 Agency capability to comply.
1507.3 Agency NEPA procedures.
1507.4 Agency NEPA program information.

AUTHORITY: 42 U.S.C. 4321–4347; 42 U.S.C. 4371–4375; 42 U.S.C. 7609; E.O. 11514, 35 FR 4247, 3 CFR, 1966–1970, Comp., p. 902, as amended by E.O. 11991, 42 FR 26967, 3 CFR, 1977 Comp., p. 123; and E.O. 13807, 82 FR 40463, 3 CFR, 2017, Comp., p. 369.

SOURCE: 85 FR 43373, July 16, 2020, unless otherwise noted.

§ 1507.1 Compliance.

All agencies of the Federal Government shall comply with the regulations in this subchapter.

§ 1507.2 Agency capability to comply.

Each agency shall be capable (in terms of personnel and other resources) of complying with the requirements of NEPA and the regulations in this subchapter. Such compliance may include use of the resources of other agencies, applicants, and other participants in the NEPA process, but the agency using the resources shall itself have sufficient capability to evaluate what others do for it and account for the contributions of others. Agencies shall:

(a) Fulfill the requirements of section 102(2)(A) of NEPA to utilize a systematic, interdisciplinary approach that will ensure the integrated use of the natural and social sciences and the environmental design arts in planning and in decision making that may have an impact on the human environment. Agencies shall designate a senior agency official to be responsible for overall review of agency NEPA compliance, including resolving implementation issues.

(b) Identify methods and procedures required by section 102(2)(B) of NEPA to ensure that presently unquantified environmental amenities and values may be given appropriate consideration.

(c) Prepare adequate environmental impact statements pursuant to section 102(2)(C) of NEPA and cooperate on the development of statements in the areas where the agency has jurisdiction by law or special expertise or is authorized to develop and enforce environmental standards.

(d) Study, develop, and describe alternatives to recommended courses of action in any proposal that involves unresolved conflicts concerning alternative uses of available resources, consistent with section 102(2)(E) of NEPA.

(e) Comply with the requirements of section 102(2)(H) of NEPA that the agency initiate and utilize ecological information in the planning and development of resource-oriented projects.

(f) Fulfill the requirements of sections 102(2)(F), 102(2)(G), and 102(2)(I), of NEPA, Executive Order 11514, Protection and Enhancement of Environmental Quality, section 2, as amended by Executive Order 11991, Relating to Protection and Enhancement of Environmental Quality, and Executive Order 13807, Establishing Discipline and Accountability in the Environmental Review and Permitting for Infrastructure Projects.

§ 1507.3 Agency NEPA procedures.

(a) Where existing agency NEPA procedures are inconsistent with the regulations in this subchapter, the regulations in this subchapter shall apply, consistent with § 1506.13 of this chapter, unless there is a clear and fundamental conflict with the requirements of another statute. The Council has determined that the categorical exclusions contained in agency NEPA procedures as of September 14, 2020 are consistent with this subchapter.

(b) No more than 36 months after September 14, 2020, or 9 months after the establishment of an agency, whichever comes later, each agency shall develop or revise, as necessary, proposed procedures to implement the regulations in this subchapter, including to eliminate any inconsistencies with the regulations in this subchapter.When the agency is a department, it may be efficient for major subunits (with the consent of the department) to adopt their own procedures. Except for agency efficiency (see paragraph (c) of this

section) or as otherwise required by law, agency NEPA procedures shall not impose additional procedures or requirements beyond those set forth in the regulations in this subchapter.

(1) Each agency shall consult with the Council while developing or revising its proposed procedures and before publishing them in the FEDERAL REGISTER for comment. Agencies with similar programs should consult with each other and the Council to coordinate their procedures, especially for programs requesting similar information from applicants.

(2) Agencies shall provide an opportunity for public review and review by the Council for conformity with the Act and the regulations in this subchapter before adopting their final procedures. The Council shall complete its review within 30 days of the receipt of the proposed final procedures. Once in effect, the agency shall publish its NEPA procedures and ensure that they are readily available to the public.

(c) Agencies shall adopt, as necessary, agency NEPA procedures to improve agency efficiency and ensure that agencies make decisions in accordance with the Act's procedural requirements. Such procedures shall include:

(1) Designating the major decision points for the agency's principal programs likely to have a significant effect on the human environment and assuring that the NEPA process begins at the earliest reasonable time, consistent with §1501.2 of this chapter, and aligns with the corresponding decision points.

(2) Requiring that relevant environmental documents, comments, and responses be part of the record in formal rulemaking or adjudicatory proceedings.

(3) Requiring that relevant environmental documents, comments, and responses accompany the proposal through existing agency review processes so that decision makers use the statement in making decisions.

(4) Requiring that the alternatives considered by the decision maker are encompassed by the range of alternatives discussed in the relevant environmental documents and that the decision maker consider the alternatives described in the environmental documents. If another decision document accompanies the relevant environmental documents to the decision maker, agencies are encouraged to make available to the public before the decision is made any part of that document that relates to the comparison of alternatives.

(5) Requiring the combination of environmental documents with other agency documents. Agencies may designate and rely on one or more procedures or documents under other statutes or Executive orders as satisfying some or all of the requirements in this subchapter, and substitute such procedures and documentation to reduce duplication. When an agency substitutes one or more procedures or documents for the requirements in this subchapter, the agency shall identify the respective requirements that are satisfied.

(d) Agency procedures should identify those activities or decisions that are not subject to NEPA, including:

(1) Activities or decisions expressly exempt from NEPA under another statute;

(2) Activities or decisions where compliance with NEPA would clearly and fundamentally conflict with the requirements of another statute;

(3) Activities or decisions where compliance with NEPA would be inconsistent with Congressional intent expressed in another statute;

(4) Activities or decisions that are non-major Federal actions;

(5) Activities or decisions that are non-discretionary actions, in whole or in part, for which the agency lacks authority to consider environmental effects as part of its decision-making process; and

(6) Actions where the agency has determined that another statute's requirements serve the function of agency compliance with the Act.

(e) Agency procedures shall comply with the regulations in this subchapter except where compliance would be inconsistent with statutory requirements and shall include:

(1) Those procedures required by §§1501.2(b)(4) (assistance to applicants) and 1506.6(e) of this chapter (status information).

(2) Specific criteria for and identification of those typical classes of action:

(i) Which normally do require environmental impact statements.

(ii) Which normally do not require either an environmental impact statement or an environmental assessment and do not have a significant effect on the human environment (categorical exclusions (§ 1501.4 of this chapter)). Any procedures under this section shall provide for extraordinary circumstances in which a normally excluded action may have a significant environmental effect. Agency NEPA procedures shall identify when documentation of a categorical exclusion determination is required.

(iii) Which normally require environmental assessments but not necessarily environmental impact statements.

(3) Procedures for introducing a supplement to an environmental assessment or environmental impact statement into its formal administrative record, if such a record exists.

(f) Agency procedures may:

(1) Include specific criteria for providing limited exceptions to the provisions of the regulations in this subchapter for classified proposals. These are proposed actions that are specifically authorized under criteria established by an Executive order or statute to be kept secret in the interest of national defense or foreign policy and are in fact properly classified pursuant to such Executive order or statute. Agencies may safeguard and restrict from public dissemination environmental assessments and environmental impact statements that address classified proposals in accordance with agencies' own regulations applicable to classified information. Agencies should organize these documents so that classified portions are included as annexes, so that the agencies can make the unclassified portions available to the public.

(2) Provide for periods of time other than those presented in § 1506.11 of this chapter when necessary to comply with other specific statutory requirements, including requirements of lead or cooperating agencies.

(3) Provide that, where there is a lengthy period between the agency's decision to prepare an environmental impact statement and the time of actual preparation, the agency may publish the notice of intent required by § 1501.9(d) of this chapter at a reasonable time in advance of preparation of the draft statement. Agency procedures shall provide for publication of supplemental notices to inform the public of a pause in its preparation of an environmental impact statement and for any agency decision to withdraw its notice of intent to prepare an environmental impact statement.

(4) Adopt procedures to combine its environmental assessment process with its scoping process.

(5) Establish a process that allows the agency to use a categorical exclusion listed in another agency's NEPA procedures after consulting with that agency to ensure the use of the categorical exclusion is appropriate. The process should ensure documentation of the consultation and identify to the public those categorical exclusions the agency may use for its proposed actions. Then, the agency may apply the categorical exclusion to its proposed actions.

[85 FR 43373, July 16, 2020, as amended at 86 FR 34158, June 29, 2021]

§ 1507.4 Agency NEPA program information.

(a) To allow agencies and the public to efficiently and effectively access information about NEPA reviews, agencies shall provide for agency websites or other means to make available environmental documents, relevant notices, and other relevant information for use by agencies, applicants, and interested persons. Such means of publication may include:

(1) Agency planning and environmental documents that guide agency management and provide for public involvement in agency planning processes;

(2) A directory of pending and final environmental documents;

(3) Agency policy documents, orders, terminology, and explanatory materials regarding agency decision-making processes;

(4) Agency planning program information, plans, and planning tools; and

(5) A database searchable by geographic information, document status, document type, and project type.

(b) Agencies shall provide for efficient and effective interagency coordination of their environmental program websites, including use of shared databases or application programming interface, in their implementation of NEPA and related authorities.

PART 1508—DEFINITIONS

Sec.
1508.1 Definitions.
1508.2 [Reserved]

AUTHORITY: 42 U.S.C. 4321–4347; 42 U.S.C. 4371–4375; 42 U.S.C. 7609; E.O. 11514, 35 FR 4247, 3 CFR, 1966–1970, Comp., p. 902, as amended by E.O. 11991, 42 FR 26967, 3 CFR, 1977 Comp., p. 123; and E.O. 13807, 82 FR 40463, 3 CFR, 2017, Comp., p. 369.

SOURCE: 85 FR 43378, July 16, 2020, unless otherwise noted.

§ 1508.1 Definitions.

The following definitions apply to the regulations in this subchapter. Federal agencies shall use these terms uniformly throughout the Federal Government.

(a) *Act* or *NEPA* means the National Environmental Policy Act, as amended (42 U.S.C. 4321, *et seq.*).

(b) *Affecting* means will or may have an effect on.

(c) *Authorization* means any license, permit, approval, finding, determination, or other administrative decision issued by an agency that is required or authorized under Federal law in order to implement a proposed action.

(d) *Categorical exclusion* means a category of actions that the agency has determined, in its agency NEPA procedures (§ 1507.3 of this chapter), normally do not have a significant effect on the human environment.

(e) *Cooperating agency* means any Federal agency (and a State, Tribal, or local agency with agreement of the lead agency) other than a lead agency that has jurisdiction by law or special expertise with respect to any environmental impact involved in a proposal (or a reasonable alternative) for legislation or other major Federal action that may significantly affect the quality of the human environment.

(f) *Council* means the Council on Environmental Quality established by title II of the Act.

(g) *Effects* or *impacts* means changes to the human environment from the proposed action or alternatives that are reasonably foreseeable and have a reasonably close causal relationship to the proposed action or alternatives, including those effects that occur at the same time and place as the proposed action or alternatives and may include effects that are later in time or farther removed in distance from the proposed action or alternatives.

(1) Effects include ecological (such as the effects on natural resources and on the components, structures, and functioning of affected ecosystems), aesthetic, historic, cultural, economic (such as the effects on employment), social, or health effects. Effects may also include those resulting from actions that may have both beneficial and detrimental effects, even if on balance the agency believes that the effect will be beneficial.

(2) A ''but for'' causal relationship is insufficient to make an agency responsible for a particular effect under NEPA. Effects should generally not be considered if they are remote in time, geographically remote, or the product of a lengthy causal chain. Effects do not include those effects that the agency has no ability to prevent due to its limited statutory authority or would occur regardless of the proposed action.

(3) An agency's analysis of effects shall be consistent with this paragraph (g). Cumulative impact, defined in 40 CFR 1508.7 (1978), is repealed.

(h) *Environmental assessment* means a concise public document prepared by a Federal agency to aid an agency's compliance with the Act and support its determination of whether to prepare an environmental impact statement or a finding of no significant impact, as provided in § 1501.6 of this chapter.

(i) *Environmental document* means an environmental assessment, environmental impact statement, finding of no significant impact, or notice of intent.

(j) *Environmental impact statement* means a detailed written statement as required by section 102(2)(C) of NEPA.

(k) *Federal agency* means all agencies of the Federal Government. It does not

mean the Congress, the Judiciary, or the President, including the performance of staff functions for the President in his Executive Office. For the purposes of the regulations in this subchapter, Federal agency also includes States, units of general local government, and Tribal governments assuming NEPA responsibilities from a Federal agency pursuant to statute.

(l) *Finding of no significant impact* means a document by a Federal agency briefly presenting the reasons why an action, not otherwise categorically excluded (§ 1501.4 of this chapter), will not have a significant effect on the human environment and for which an environmental impact statement therefore will not be prepared.

(m) *Human environment* means comprehensively the natural and physical environment and the relationship of present and future generations of Americans with that environment. (*See also* the definition of ''effects'' in paragraph (g) of this section.)

(n) *Jurisdiction by law* means agency authority to approve, veto, or finance all or part of the proposal.

(o) *Lead agency* means the agency or agencies, in the case of joint lead agencies, preparing or having taken primary responsibility for preparing the environmental impact statement.

(p) *Legislation* means a bill or legislative proposal to Congress developed by a Federal agency, but does not include requests for appropriations or legislation recommended by the President.

(q) *Major Federal action* or *action* means an activity or decision subject to Federal control and responsibility subject to the following:

(1) Major Federal action does not include the following activities or decisions:

(i) Extraterritorial activities or decisions, which means agency activities or decisions with effects located entirely outside of the jurisdiction of the United States;

(ii) Activities or decisions that are non-discretionary and made in accordance with the agency's statutory authority;

(iii) Activities or decisions that do not result in final agency action under the Administrative Procedure Act or other statute that also includes a finality requirement;

(iv) Judicial or administrative civil or criminal enforcement actions;

(v) Funding assistance solely in the form of general revenue sharing funds with no Federal agency control over the subsequent use of such funds;

(vi) Non-Federal projects with minimal Federal funding or minimal Federal involvement where the agency does not exercise sufficient control and responsibility over the outcome of the project; and

(vii) Loans, loan guarantees, or other forms of financial assistance where the Federal agency does not exercise sufficient control and responsibility over the effects of such assistance (for example, action does not include farm ownership and operating loan guarantees by the Farm Service Agency pursuant to 7 U.S.C. 1925 and 1941 through 1949 and business loan guarantees by the Small Business Administration pursuant to 15 U.S.C. 636(a), 636(m), and 695 through 697g).

(2) Major Federal actions may include new and continuing activities, including projects and programs entirely or partly financed, assisted, conducted, regulated, or approved by Federal agencies; new or revised agency rules, regulations, plans, policies, or procedures; and legislative proposals (§ 1506.8 of this chapter).

(3) Major Federal actions tend to fall within one of the following categories:

(i) Adoption of official policy, such as rules, regulations, and interpretations adopted under the Administrative Procedure Act, 5 U.S.C. 551 *et seq.* or other statutes; implementation of treaties and international conventions or agreements, including those implemented pursuant to statute or regulation; formal documents establishing an agency's policies which will result in or substantially alter agency programs.

(ii) Adoption of formal plans, such as official documents prepared or approved by Federal agencies, which prescribe alternative uses of Federal resources, upon which future agency actions will be based.

(iii) Adoption of programs, such as a group of concerted actions to implement a specific policy or plan; systematic and connected agency decisions allocating agency resources to implement a specific statutory program or executive directive.

(iv) Approval of specific projects, such as construction or management activities located in a defined geographic area. Projects include actions approved by permit or other regulatory decision as well as Federal and federally assisted activities.

(r) *Matter* includes for purposes of part 1504 of this chapter:

(1) With respect to the Environmental Protection Agency, any proposed legislation, project, action or regulation as those terms are used in section 309(a) of the Clean Air Act (42 U.S.C. 7609).

(2) With respect to all other agencies, any proposed major Federal action to which section 102(2)(C) of NEPA applies.

(s) *Mitigation* means measures that avoid, minimize, or compensate for effects caused by a proposed action or alternatives as described in an environmental document or record of decision and that have a nexus to those effects. While NEPA requires consideration of mitigation, it does not mandate the form or adoption of any mitigation. Mitigation includes:

(1) Avoiding the impact altogether by not taking a certain action or parts of an action.

(2) Minimizing impacts by limiting the degree or magnitude of the action and its implementation.

(3) Rectifying the impact by repairing, rehabilitating, or restoring the affected environment.

(4) Reducing or eliminating the impact over time by preservation and maintenance operations during the life of the action.

(5) Compensating for the impact by replacing or providing substitute resources or environments.

(t) *NEPA process* means all measures necessary for compliance with the requirements of section 2 and title I of NEPA.

(u) *Notice of intent* means a public notice that an agency will prepare and consider an environmental impact statement.

(v) *Page* means 500 words and does not include explanatory maps, diagrams, graphs, tables, and other means of graphically displaying quantitative or geospatial information.

(w) *Participating agency* means a Federal, State, Tribal, or local agency participating in an environmental review or authorization of an action.

(x) *Proposal* means a proposed action at a stage when an agency has a goal, is actively preparing to make a decision on one or more alternative means of accomplishing that goal, and can meaningfully evaluate its effects. A proposal may exist in fact as well as by agency declaration that one exists.

(y) *Publish* and *publication* mean methods found by the agency to efficiently and effectively make environmental documents and information available for review by interested persons, including electronic publication, and adopted by agency NEPA procedures pursuant to § 1507.3 of this chapter.

(z) *Reasonable alternatives* means a reasonable range of alternatives that are technically and economically feasible, meet the purpose and need for the proposed action, and, where applicable, meet the goals of the applicant.

(aa) *Reasonably foreseeable* means sufficiently likely to occur such that a person of ordinary prudence would take it into account in reaching a decision.

(bb) *Referring agency* means the Federal agency that has referred any matter to the Council after a determination that the matter is unsatisfactory from the standpoint of public health or welfare or environmental quality.

(cc) *Scope* consists of the range of actions, alternatives, and impacts to be considered in an environmental impact statement. The scope of an individual statement may depend on its relationships to other statements (§ 1501.11 of this chapter).

(dd) *Senior agency official* means an official of assistant secretary rank or higher (or equivalent) that is designated for overall agency NEPA compliance, including resolving implementation issues.

(ee) *Special expertise* means statutory responsibility, agency mission, or related program experience.

(ff) *Tiering* refers to the coverage of general matters in broader environmental impact statements or environmental assessments (such as national program or policy statements) with subsequent narrower statements or environmental analyses (such as regional or basin-wide program statements or ultimately site-specific statements) incorporating by reference the general discussions and concentrating solely on the issues specific to the statement subsequently prepared.

§ 1508.2 [Reserved]

SUBCHAPTER B—ADMINISTRATIVE PROCEDURES AND OPERATIONS

PART 1515—FREEDOM OF INFORMATION ACT PROCEDURES

PURPOSE

Sec.
1515.1 FOIA procedures.

ORGANIZATION OF CEQ

1515.2 About the Council on Environmental Quality (CEQ).
1515.3 CEQ organization.
1515.4 CEQ FOIA Officials.

PROCEDURES FOR REQUESTING RECORDS

1515.5 Making a Freedom of Information Act request.
1515.6 CEQ's response to a request.
1515.7 Expedited processing.
1515.8 Appeals.
1515.9 Extending CEQ's time to respond.

AVAILABILITY OF INFORMATION

1515.10 Obtaining available information.

COSTS

1515.11 Definitions.
1515.12 Fees in general.
1515.13 Fees for categories of requesters.
1515.14 Other charges.
1515.15 Payment and waiver.
1515.16 Other rights and services.
1515.17–1515.19 [Reserved]

AUTHORITY: 5 U.S.C. 552, as amended by Pub. L. 93–502, Pub. L. 99–570, Pub. L. 104–231, Pub. L. 110–175; E.O. 13392; Pres. Mem. 74 FR 4685. Source: 42 FR 65158, Dec. 30, 1977, unless otherwise noted.

SOURCE: 75 FR 48590, Aug. 11, 2010, unless otherwise noted.

PURPOSE

§ 1515.1 FOIA procedures.

The Freedom of Information Act (5 U.S.C. 552), as amended, commonly known as FOIA, is a Federal law that creates a procedure for any person to request documents and other records from United States Government agencies. The law requires every Federal agency to make available to the public the material requested, unless the material falls under one of the limited exemptions stated in Section 552(b) of the Act. These procedures explain how the Council on Environmental Quality (CEQ)—one of several agencies in the Executive Office of the President—will carry out the FOIA. They are written from the standpoint of a FOIA requester and should be read together with the FOIA, which provides additional information about access to records maintained by CEQ. This information is furnished for the guidance of the public and in compliance with the requirements of Section 552 of title 5, United States Code, as amended.

ORGANIZATION OF CEQ

§ 1515.2 About the Council on Environmental Quality (CEQ).

The Council on Environmental Quality (''CEQ'' or ''the Council'') was created by the National Environmental Policy Act of 1969, as amended (42 U.S.C. 4321 through 4347). The Council's authority is primarily derived from that Act, the Environmental Quality Improvement Act of 1970, as amended (42 U.S.C. 4371–4374), Reorganization Plan No. 1 of 1977 (July 15, 1977), and Executive Order 11514, ''Protection and Enhancement of Environmental Quality,'' March 5, 1970, as amended by Executive Order 11991, May 24, 1977.

§ 1515.3 CEQ organization.

(a) The Council is made up of a Chair appointed by the President and subject to approval by the Senate who serves in a full-time capacity. Congress has allowed CEQ to consist of a Council of one member who serves as Chairman or Chair.

(b) The National Environmental Policy Act and the Environmental Quality Improvement Act give the Council the authority to hire any officers and staff that may be necessary to carry out responsibilities and functions specified in these two Acts. Also, the use of consultants and experts is permitted.

(c) In addition to the Chair, the Council has program and legal staff.

(d) The Council has no field or regional offices.

(e) The Council is located at 722 Jackson Place NW., Washington, DC 20503. Office hours are 9 a.m.–5:30 p.m.,

Monday through Friday, except Federal holidays. To meet with any of the staff, please write or phone ahead for an appointment. The main number is 202–456–6224.

§ 1515.4 CEQ FOIA Officials.

(a) The Chair shall appoint a Chief Freedom of Information Act Officer (Chief FOIA Officer) who is responsible for overseeing the Council's administration of the Freedom of Information Act and for receiving, routing and overseeing the processing of all Freedom of Information requests as set forth in these regulations. The Chair shall appoint an Appeals Officer, who is responsible for processing and acting upon any appeals and may designate one or more CEQ officials, as appropriate, as FOIA Officers authorized to oversee and process FOIA requests. The Chief FOIA Officer may serve as the Appeals Officer.

(b) The Chief FOIA officer shall designate a FOIA Public Liaison who is the supervisory official to whom a FOIA requester can raise concerns about the service the FOIA requester has received from the CEQ FOIA Center, described in Section 1515.5(a), following an initial response from the staff of the CEQ FOIA Center staff. The FOIA Public Liaison shall assist, as appropriate, in reducing delays and increasing understanding of the status of requests. The Chief FOIA officer shall also designate a CEQ FOIA Officer responsible for overseeing CEQ's day-to-day administration of the FOIA and for receiving, routing, and overseeing the processing of all FOIA requests.

PROCEDURES FOR REQUESTING RECORDS

§ 1515.5 Making a Freedom of Information Act request.

(a) *Availability of records.* The Council maintains a World Wide Web site, *http://www.whitehouse.gov/administration/eop/ceq*, and an online Freedom of Information Act Requester Service Center (''Center''), *http://www.whitehouse.gov/administration/eop/ceq/foia*. From the Center, a requester can find contact information regarding the CEQ's FOIA Public Liaison, as defined in Section 1515.4(b), and access CEQ's Online Reading Room where CEQ makes available records pertaining to matters within the scope of 5 U.S.C. 552(a)(2), as amended, and environmental issues and other documents that, because of the nature of their subject matter, are likely to be the subject of FOIA requests. To save both time and money, CEQ strongly urges requesters to review documents currently available from the Center's Online Reading Room before submitting a request.

(b) *Requesting information from the Council.* (1) Requesters must make a Freedom of Information Act request in writing. For quickest possible handling, it should be sent via e-mail to: *efoia@ceq.eop.gov* and must include in the subject line of the e-mail message: ''Freedom of Information Act Request.'' Written requests may also be faxed to (202) 456–0753 or addressed and mailed to: Council on Environmental Quality, Executive Office of the President, 722 Jackson Place NW., Washington, DC 20503. Requesters should mark both the request letter and the envelope ''Freedom of Information Act Request'' and include their name, address, and sufficient contact information to allow follow up regarding the scope and status of your request.

(2) The request should identify or reasonably describe the desired record. It should be as specific as possible, so that the item can be readily found. Blanket requests, such as requests for ''all materials relating to'' a specified subject are not recommended. Requesters should specify the preferred form or format (including electronic format) for the response. CEQ will accommodate such requests, if the record is readily reproducible in that form or format. Please be aware that FOIA requests and responses may themselves be made available for public inspection.

(3) The CEQ FOIA Officer is responsible for acting on all initial requests; however, he or she may consult and refer, pursuant to Section 552(a)(6)(B)(iii)(III) of the FOIA, with another agency if he or she determines that that agency is better able to act on the request. Whenever the CEQ FOIA Officer refers all or any part of the responsibility for responding to a request to another agency, he or she

will notify the requester of the referral, the name of the agency and agency official to whom it has been referred, and which portion of the request has been referred. Unless a request is deemed ''expedited'' as set forth in Section 1515.7 below, the CEQ FOIA Officer will respond to requests in order of receipt. CEQ may use two or more processing tracks by distinguishing between simple and more complex requests based on the amount of time and work needed to process the request. CEQ may provide requesters on a slower track an opportunity to limit the scope of their request in order to qualify for faster processing.

(4) The Council will make a reasonable effort to assist with defining the request to eliminate extraneous and unwanted materials and to keep search and copying fees to a minimum. If budgetary constraints exist, the requester should indicate the maximum fee he or she is prepared to pay to acquire the information. (*See also* § 1515.11)

(5) The Freedom of Information Act does not require a government agency to create or research information; rather, it only requires that existing records be made available to the public.

§ 1515.6 CEQ's response to a request.

(a) Upon receipt of any written request for information or records, under the Act, the CEQ FOIA Officer or his or her designee, will make an initial determination on the request within 20 days (excepting Saturdays, Sundays and Federal holidays) from the date CEQ receives the request unless unusual or exceptional circumstances exist. The CEQ FOIA Officer will provide written notification of the determination, including, if applicable, notification that the request has been referred to another agency for consultation as set forth above in § 1515.5(b)(3). CEQ may make one request to the requester for information and toll the 20-day period while it is awaiting such information that it has reasonably requested from the requester. It may also toll the 20-day period if necessary to clarify with the requester issues regarding fee assessment. In either case, CEQ's receipt of the requester's response to its request for information or clarification ends the tolling period.

(b) Requests received by the CEQ FOIA Officer or his or her designee will be assigned an individualized tracking number if they will take more than 10 days to process. Requesters may call the FOIA Public Liaison at (202) 456–6224 and, using the tracking number, obtain information about the request, including the date on which CEQ originally received the request and an estimated date on which CEQ will complete action on the request.

(c) If it is appropriate to grant the request, a staff member will immediately collect the requested materials in order to accompany, wherever possible, the Freedom of Information Officer's letter conveying decision.

(d) If a request is denied in part or in full, the letter conveying the decision will be signed by the CEQ FOIA Officer, and will include: The reasons for any denial, including any FOIA exemption(s) applied by the FOIA Officer in denying the request; an estimate of the volume of records or information withheld, in number of pages or in some other reasonable form of estimation. This estimate does not need to be provided, if the volume is otherwise indicated through exemptions on records disclosed in part or, if providing an estimate would harm an interest protected by an applicable exemption; and the procedure for filing an appeal.

§ 1515.7 Expedited processing.

(a) Requests and appeals will be taken out of order and given expedited treatment whenever it is determined that they involve:

(1) Circumstances in which the lack of expedited treatment could reasonably be expected to pose an imminent threat to the life or physical safety of an individual; or

(2) An urgency to inform the public about an actual or alleged Federal Government activity, if made by a person primarily engaged in disseminating information.

(b) A request for expedited processing may be made at the time of the initial request for records or at any later time.

(c) A requester who seeks expedited processing must submit a written

statement, certified to be true and correct to the best of that person's knowledge and belief, explaining in detail the basis for requesting expedited processing. For example, a requester within the category described in paragraph (a)(2) of this section, if not a full-time member of the news media, must establish that he or she is a person whose main professional activity or occupation is information dissemination, though it need not be his or her sole occupation. A requester within the category (a)(2) of this section must also establish a particular urgency to inform the public about the government activity involved in the request, beyond the public's right to know about government activity generally. Formal certification may be waived as a matter of administrative discretion.

(d) Within 10 days of its receipt of a request for expedited processing, the CEQ FOIA Officer will decide whether to grant it and will notify the requester of the decision. If a request for expedited treatment is granted, the request will be placed in the expedited processing track, given priority, and processed as soon as practicable. If a request for expedited processing is denied, any appeal of that decision will be acted on expeditiously.

§ 1515.8 Appeals.

(a) The requester may appeal an adverse determination, in any respect, to the CEQ FOIA Appeals Officer. Any appeal must be received by CEQ within 60 days of the date on the CEQ letter denying the request.

(b) Appeals must be in writing and may be sent via e-mail to: *efoia@ceq.eop.gov*. They may also be sent via facsimile to: (202) 456–0753 or via U.S. mail addressed to: FOIA Appeals Officer, Council on Environmental Quality, Executive Office of the President, 722 Jackson Place NW., Washington, DC 20503.

(c) The appeal letter should specify the records requested and ask the Appeals Officer to review the determination made by the Freedom of Information Officer. The letter should explain the basis for the appeal.

(d) The Appeals Officer will make a final determination on an appeal within 20 working days (excepting Saturdays, Sundays and Federal holidays) from the date CEQ receives the appeal. The Appeals Officer (or designee) will send a letter to the requester conveying the decision as soon as it is made. If an appeal is denied, in part or in whole, the letter will also include the provisions for judicial review.

§ 1515.9 Extending CEQ's time to respond.

(a) In unusual circumstances as defined in paragraph (c) of this section, the time limits for responding to a request (§§ 1515.6(a) and 1515.8(d)) may be extended by the Council for not more than 10 working days. Extensions may be granted by the CEQ FOIA Officer in the case of initial requests and by the Appeals Officer in the case of any appeals. The extension period may be split between the initial request and the appeal but may not exceed 10 working days overall. Extensions will be confirmed in writing and set forth the reasons for the extension and the date that the final determination is expected.

(b) With respect to a request for which a written notice under this section extends the time limits prescribed under § 1515.6(a), the CEQ FOIA Officer will notify the requester, if the request cannot be processed within the time limit specified in § 1515.6(a) and provide an opportunity to limit the scope of the request, so that it may be processed within that time limit or an opportunity to arrange an alternative time frame for processing the request or a modified request. A requester's refusal to reasonably modify the request or arrange such an alternative time frame will be considered as a factor in determining whether exceptional circumstances exist for purposes of 5 U.S.C. 552(a)(6)(C). When CEQ reasonably believes that a requester, or a group of requesters, has submitted a request constituting a single request that would otherwise satisfy the unusual circumstances specified under this section, CEQ may aggregate those requests for purposes of this paragraph. Multiple requests involving unrelated matters will not be aggregated.

(c) The term ''unusual circumstances'' means:

(1) The need to search for and collect the requested records from establishments that are separate from the office processing the request;

(2) The need to search for, collect, and appropriately examine a voluminous amount of separate and distinct records which are demanded in a single request; or

(3) The need for consultation, which will be conducted with all practicable speed, with another agency having a substantial interest in the determination of the request or among two or more components of the agency having substantial subject-matter interest therein.

AVAILABILITY OF INFORMATION

§ 1515.10 Obtaining available information.

(a) When a request for information has been granted in whole or in part, CEQ will notify the requester in writing, inform the requester in the notice of any fee charged under § 1515.11 and will disclose records to the requester promptly on payment of any applicable fees. The requested material may be made available on CEQ's Online FOIA Center, *http://www.whitehouse.gov/administration/eop/ceq/foia*, and also in the form or format requested if the record is readily reproducible in that form or format with reasonable effort. When a form or format of the response is not requested, CEQ will respond in the form or format in which the document is most accessible to CEQ. ''Readily reproducible'' means, with respect to electronic format, that the requested record or records can be downloaded or transferred intact to a computer disk or other electronic medium using equipment currently in use by CEQ.

(b) Records disclosed in part will be marked or annotated to show information deleted, unless doing so would harm an interest protected by an applicable exemption. The location of the information deleted will also be indicated in the record, if technically feasible.

(c) The legislative history of the establishment of CEQ states that the Congress intended CEQ to be a confidential advisor to the President on matters of environmental policy. Therefore, members of the public should be aware that communications between CEQ and the President (including communications between their staff) may be confidential; they will usually fall, at a minimum, within Exemption 5 of the Act. The Freedom of Information Officer shall review each request to determine whether the record is exclusively factual or may have factual portions which may be reasonably segregated and made available to the requester. Furthermore, on the recommendation of the CEQ FOIA Officer or Appeals Officer, CEQ will consider the release of an entire record, even if it comes within an exemption or contains policy advice, if its disclosure would not impair Executive policymaking processes or CEQ's participation in decisionmaking.

COSTS

§ 1515.11 Definitions.

For purposes of these regulations:

Commercial use request means a request from or on behalf of a person who seeks information for a use or purpose that furthers the requester's or other person's commercial, trade, or profit interests.

Direct costs means those costs incurred in searching for and duplicating (and, in the case of commercial use requests, reviewing) documents to respond to a FOIA request. Direct costs include, for example, salaries of employees who perform the work and costs of conducting large-scale computer searches.

Duplicate means to copy records to be released to the FOIA requester. Copies can take the form of paper, audio-visual materials, or electronic records, among others.

Educational institution means a school that operates a program of scholarly research.

Non-commercial scientific institution means an institution that is not operated on a commercial basis and that operates solely for the purpose of conducting scientific research the results of which are not intended to promote any particular product or industry.

Representative of the news media means any person or entity that gathers information of potential interest to

a segment of the public, uses its editorial skills to turn the raw materials into a distinct work, and distributes that work to an audience.

Review means to examine a record to determine whether any portion of the record may be withheld and to process a record for disclosure, including by redacting it.

Search means to look for and retrieve records covered by a FOIA request, including by looking page-by-page or line-by-line to identify responsive material within individual records.

§ 1515.12 Fees in general.

CEQ shall charge fees that recoup the full allowable direct costs it incurs in responding to FOIA requests. CEQ may assess charges for time spent searching for records even if CEQ fails to locate the records or if the records are located and determined to be exempt from disclosure. In general, CEQ shall apply the following fee schedule, subject to §§ 1515.13 through 1515.15:

(a) *Manual searches.* Time devoted to manual searches shall be charged on the basis of the salary of the employee(s) conducting the search (basic hourly rate(s) of pay for the employee(s), plus 16 percent).

(b) *Electronic searches.* Fees shall reflect the direct cost of conducting the search. This will include the cost of operating the central processing unit for that portion of operating time that is directly attributable to searching for and printing records responsive to the FOIA request and operator/programmer salary attributable to the search.

(c) *Record reviews.* Time devoted to reviewing records shall be charged on the same basis as under paragraph (a) of this section, but shall only be applicable to the review of records located in response to commercial use requests.

(d) *Duplication.* Fees for copying paper records or for printing electronic records shall be assessed at a rate of $.15 per page. For other types of copies such as disks or audio visual tapes, CEQ shall charge the direct cost of producing the document(s). If total costs are expected to exceed $25, the FOIA Officer shall provide the requester with an estimate in writing and, in return, obtain from the requester a commitment to pay the estimated fee. This does not apply if the requester has indicated in advance a willingness to pay fees as high as those anticipated. If a requester wishes to limit costs, the FOIA Officer shall provide the requester an opportunity to reformulate the request in order to reduce costs. If the requester reformulates a request, it shall be considered a new request and the 20-day period described in § 1515.6(a) shall be deemed to begin when the FOIA Officer receives the request.

(e)(1) *Advance payments required.* The FOIA Officer may require a requester to make an advance deposit of up to the amount of the entire anticipated fee before the FOIA Officer begins to process the request if:

(i) The FOIA Officer estimates that the fee will exceed $250; or

(ii) The requester has previously failed to pay a fee in a timely fashion.

(2) When the FOIA Officer requires a requester to make an advance payment, the 20-day period described in § 1515.6(a) shall begin when the FOIA Officer receives the payment.

(f) *No assessment of fee.* CEQ shall not charge a fee to any requester if:

(1) The cost of collecting the fee would be equal to or greater than the fee itself; or

(2) After the effective date of these regulations CEQ fails to comply with a time limit under the Freedom of Information Act for responding to the request for records where no unusual or exceptional circumstances apply.

§ 1515.13 Fees for categories of requesters.

CEQ shall assess fees for certain categories of requesters as follows:

(a) *Commercial use requesters.* In responding to commercial use requests, CEQ shall assess fees that recover the full direct costs of searching for, reviewing, and duplicating records.

(b) *Educational and non-commercial scientific institutions.* CEQ shall provide records to requesters in this category for the cost of duplication alone, excluding charges for the first 100 pages. To qualify for inclusion in this fee category, a requester must show that the request is authorized by and is made under the auspices of a qualifying institution and that the records are

sought to further scholarly research, not an individual goal.

(c) *Representatives of the news media.* CEQ shall provide records to requesters in this category for the cost of duplication alone, excluding charges for the first 100 pages.

(d) *All other requesters.* CEQ shall charge requesters who do not fall within paragraphs (a) through (c) of this section fees that recover the full direct cost of searching for and duplicating records, excluding charges for the first 100 pages of reproduction and the first two hours of search time.

§ 1515.14 Other charges.

CEQ may apply other charges, including the following:

(a) *Special charges.* CEQ shall recover the full cost of providing special services, such as sending records by express mail, to the extent that CEQ elects to provide them in that manner.

(b) *Interest charges.* CEQ may begin assessing interest charges on an unpaid bill starting on the 31st day following the day on which the FOIA Officer sent the billing. Interest shall be charged at the rate prescribed in 31 U.S.C. 3717 and will accrue from the date of billing.

(c) *Aggregating requests.* When the FOIA Officer reasonably believes that a requester or a group of requesters acting in concert is attempting to divide a request into a series of requests for the purpose of avoiding fees, the FOIA Officer shall aggregate those requests and charge accordingly.

§ 1515.15 Payment and waiver.

(a) *Remittances.* Payment shall be made in the form of check or money order made payable to the Treasury of the United States. At the time the FOIA Officer notifies a requester of the applicable fees, the Officer shall inform the requester of where to send the payment.

(b) *Waiver of fees.* CEQ may waive all or part of any fee provided for in §§ 1515.12 and 1515.13 when the FOIA Officer deems that disclosure of the information is in the general public's interest because it is likely to contribute significantly to public understanding of the operations or activities of the government and is not primarily in the commercial interest of the requester. In determining whether a fee should be waived, the FOIA Officer may consider whether:

(1) The subject matter specifically concerns identifiable operations or activities of the government;

(2) The information is already in the public domain;

(3) Disclosure of the information would contribute to the understanding of the public-at-large as opposed to a narrow segment of the population;

(4) Disclosure of the information would significantly enhance the public's understanding of the subject matter;

(5) Disclosure of the information would further a commercial interest of the requester; and

(6) The public's interest is greater than any commercial interest of the requester.

§ 1515.16 Other rights and services.

Nothing in this subpart will be construed to entitle any person, as of right, to any service or to the disclosure of any record to which such person is not entitled under the FOIA.

§§ 1515.17–1515.19 [Reserved]

PART 1516—PRIVACY ACT IMPLEMENTATION

Sec.

1516.1 Purpose and scope.
1516.2 Definitions.
1516.3 Procedures for requests pertaining to individual records in a record system.
1516.4 Times, places, and requirements for the identification of the individual making a request.
1516.5 Disclosure of requested information to the individual.
1516.6 Request for correction or amendment to the record.
1516.7 Agency review of request for correction or amendment of the record.
1516.8 Appeal of an initial adverse agency determination on correction or amendment of the record.
1516.9 Disclosure of a record to a person other than the individual to whom the record pertains.
1516.10 Fees.

AUTHORITY: 5 U.S.C. 552a; Pub. L. 93–579.

SOURCE: 42 FR 32537, June 27, 1977, unless otherwise noted.

§ 1516.1 Purpose and scope.

The purposes of these regulations are to:

(a) Establish a procedure by which an individual can determine if the Council on Environmental Quality (hereafter known as the Council) maintains a system of records which includes a record pertaining to the individual; and

(b) Establish a procedure by which an individual can gain access to a record pertaining to him or her for the purpose of review, amendment and/or correction.

§ 1516.2 Definitions.

For the purpose of these regulations:

(a) The term *individual* means a citizen of the United States or an alien lawfully admitted for permanent residence;

(b) The term *maintain* means maintain, collect, use or disseminate;

(c) The term *record* means any item or collection or grouping of information about an individual that is maintained by the Council (including, but not limited to, his or her employment history, payroll information, and financial transactions), and that contains his or her name, or an identifying number, symbol, or other identifying particular assigned to the individual such as a social security number;

(d) The term *system of records* means a group of any records under the control of the Council from which information is retrieved by the name of the individual or by some identifying number, symbol, or other identifying particular assigned to the individual; and

(e) The term *routine use* means with respect to the disclosure of a record, the use of such record for a purpose which is compatible with the purpose for which it was collected.

§ 1516.3 Procedures for requests pertaining to individual records in a record system.

An individual shall submit a written request to the Administrative Officer of the Council to determine if a system of records named by the individual contains a record pertaining to the individual. The individual shall submit a written request to the Administrative Officer of the Council which states the individual's desire to review his or her record. The Administrative Officer of the Council is available to answer questions regarding these regulations and to provide assistance in locating records in the Council's system of records.

[42 FR 32537, June 27, 1977; 42 FR 35960, July 13, 1977]

§ 1516.4 Times, places, and requirements for the identification of the individual making a request.

An individual making a request to the Administrative Officer of the Council pursuant to § 1516.3 shall present the request at the Council's office, 722 Jackson Place NW., Washington, DC 20006, on any business day between the hours of 9 a.m. and 5 p.m. and should be prepared to identify himself by signature. Requests will also be accepted in writing if mailed to the Council's offices and signed by the requester.

§ 1516.5 Disclosure of requested information to the individual.

Upon verification of identity, the Council shall disclose to the individual the information contained in the record which pertains to that individual.

(a) The individual may be accompanied for this purpose by a person of his choosing.

(b) Upon request of the individual to whom the record pertains, all information in the accounting of disclosures will be made available.

[42 FR 35960, July 13, 1977]

§ 1516.6 Request for correction or amendment to the record.

The individual may submit a request to the Administrative Officer of the Council which states the individual's desire to correct or to amend his or her record. This request must be made in accordance with the procedures of § 1516.4 and shall describe in detail the change which is requested.

[42 FR 32537, June 27, 1977. Redesignated at 42 FR 35960, July 13, 1977]

§ 1516.7 Agency review of request for correction or amendment of the record.

Within ten working days of the receipt of a request to correct or to

amend a record, the Administrative Officer of the Council will acknowledge in writing such receipt and promptly either:

(a) Make any correction or amendment of any portion thereof which the individual believes is not accurate, relevant, timely, or complete; or

(b) Inform the individual of his or her refusal to correct or amend the record in accordance with the request, the reason for the refusal, and the procedure established by the Council for the individual to request a review of that refusal.

§ 1516.8 Appeal of an initial adverse agency determination on correction or amendment of the record.

An individual may appeal refusal by the Administrative Officer of the Council to correct or to amend his or her record by submitting a request for a review of such refusal to the General Counsel, Council on Environmental Quality, 722 Jackson Place NW., Washington, DC 20006. The General Counsel shall, not later than thirty working days from the date on which the individual requests such a review, complete such review and make a final determination unless, for good cause shown, the General Counsel extends such thirty day period. If, after his or her review, the General Counsel also refuses to correct or to amend the record in accordance with the request, the individual may file with the Council a concise statement setting forth the reasons for his or her disagreement with the General Counsel's decision and may seek judicial relief under 5 U.S.C. 552a(g)(1)(A).

§ 1516.9 Disclosure of a record to a person other than the individual to whom the record pertains.

The Council will not disclose a record to any individual other than to the individual to whom the record pertains without receiving the prior written consent of the individual to whom the record pertains, unless the disclosure either has been listed as a ''routine use'' in the Council's notices of its systems of records or falls within the special conditions of disclosure set forth in section 3 of the Privacy Act of 1974.

§ 1516.10 Fees.

If an individual requests copies of his or her record, he or she shall be charged ten cents per page, excluding the cost of any search for the record, in advance of receipt of the pages.

PART 1517—PUBLIC MEETING PROCEDURES OF THE COUNCIL ON ENVIRONMENTAL QUALITY

Sec.

1517.1 Policy and scope.
1517.2 Definitions.
1517.3 Open meeting requirement.
1517.4 Exceptions.
1517.5 Procedure for closing meetings.
1517.6 Notice of meetings.
1517.7 Records of closed meetings.

AUTHORITY: 5 U.S.C. 552b(g); Pub. L. 94–409.

SOURCE: 42 FR 20818, Apr. 22, 1977, unless otherwise noted.

§ 1517.1 Policy and scope.

Consistent with the policy that the public is entitled to the fullest information regarding the decisionmaking processes of the Federal Government, it is the purpose of this part to open the meetings of the Council on Environmental Quality to public observation while protecting the rights of individuals and the ability of the Council to carry out its primary responsibility of providing advice to the President. Actions taken by the Chairman acting as Director of the Office of Environmental Quality and Council actions involving advice to the President when such advice is not formulated collegially during a meeting are outside the scope of this part. In addition to conducting the meetings required by this part, it is the Council's policy to conduct, open to public observation, periodic meetings involving Council discussions of Council business, including where appropriate, matters outside the scope of this part. This part does not affect the procedures set forth in part 1515 pursuant to which records of the Council are made available to the public for inspection and copying, except that the exemptions set forth in § 1517.4(a) shall govern in the case of any request made to copy or inspect

the transcripts, recording or minutes described in § 1517.7.

[47 FR 6277, Feb. 11, 1982]

§ 1517.2 Definitions.

For the purpose of this part:

(a) The term *Council* shall mean the Council on Environmental Quality established under title II of the National Environmental Policy Act of 1969 (42 U.S.C. 4321 through 4347).

(b) The term *meeting* means the deliberations of at least two Council members where such deliberations determine or result in the joint conduct or disposition of official collegial Council business, but does not include deliberations to take actions to open or close a meeting under §§ 1517.4 and 1517.5 or to release or withhold information under §§ 1517.4 and 1517.7. ''Meeting'' shall not be construed to prevent Council members from considering individually Council business that is circulated to them sequentially in writing.

(c) *Director* means the Chairman of the Council on Environmental Quality acting as the head of the Office of Environmental Quality pursuant to the Environmental Quality Improvement Act of 1970, Pub. L. 91–224, 42 U.S.C. 4371 through 4374.

[44 FR 34946, June 18, 1979, as amended at 47 FR 6277, Feb. 11, 1982]

§ 1517.3 Open meeting requirement.

(a) Every portion of every meeting of the Council is open to public observation subject to the exemptions provided in § 1517.4. Members of the Council may not jointly conduct or dispose of the business of the Council other than in accordance with this part.

(b) The Council will conduct open to public observation periodic meetings involving Council discussions of Council business including where appropriate matters outside the scope of this part. Such meetings will be noticed pursuant to § 1517.6.

(c) Members of the public may attend open meetings of the Council for the sole purpose of observation and may not participate in or photograph any meeting without prior permission of the Council. Members of the public who desire to participate in or photograph an open meeting of the Council may request permission to do so from the General Counsel of the Council before such meeting. Members of the public may record open meetings of the Council by means of any mechanical or electronic device unless the Council determines such recording would disrupt the orderly conduct of such meeting.

[44 FR 34946, June 18, 1979, as amended at 47 FR 6277, Feb. 11, 1982]

§ 1517.4 Exceptions.

(a) A meeting or portion thereof may be closed to public observation, and information pertaining to such meeting or portion thereof may be withheld from the public, if the Council determines that such meeting or portion thereof or disclosure of such information is likely to:

(1) Disclose matters that are (i) specifically authorized under criteria established by an Executive order to be kept secret in the interest of national defense or foreign policy and (ii) in fact properly classified pursuant to that Executive order;

(2) Relate solely to the internal personnel rules and practices of the Council;

(3) Disclose matters specifically exempted from disclosure by statute (other than the Freedom of Information Act, 5 U.S.C. 552), provided that the statute: (i) Requires that the matters be withheld from the public in such a manner as to leave no discretion on the issue, or (ii) establishes particular criteria for withholding or refers to particular types of matters to be withheld;

(4) Disclose the trade secrets and commercial or financial information obtained from a person and privileged or confidential;

(5) Involve accusing any person of a crime, or formally censuring any person;

(6) Disclose information of a personal nature if disclosure would constitute a clearly unwarranted invasion of personal privacy;

(7) Disclose investigatory records compiled for law enforcement purposes, or information which if written would be contained in such records, but only to the extent that the production of those records or information would:

(i) Interfere with enforcement proceedings,

(ii) Deprive a person of a right to a fair trial or an impartial adjudication,

(iii) Constitute an unwarranted invasion of personal privacy,

(iv) Disclose the identity of a confidential source and, in the case of a record compiled by a criminal law enforcement authority in the course of a criminal investigation, or by an agency conducting a lawful national security intelligence investigation, confidential information furnished only by the confidential source,

(v) Disclose investigative techniques and procedures, or,

(vi) Endanger the life or physical safety of law enforcement personnel;

(8) Disclose information contained in or related to examination, operating, or condition reports prepared by, on behalf of, or for the use of an agency responsible for the regulation or supervision of financial institutions;

(9) Disclose information the premature disclosure of which would be likely to significantly frustrate implementation of a proposed action of the Council. This exception shall not apply in any instance where the Council has already disclosed to the public the content or nature of the proposed action, or where the Council is required by law to make such disclosure on its own initiative prior to taking final action on the proposal; or

(10) Specifically concern the issuance of a subpoena by the Council, or the participation of the Council in a civil action or proceeding, an action in a foreign court or international tribunal, or an arbitration, or the initiation, conduct, or disposition by the Council of a particular case of formal adjudication pursuant to the procedures in 5 U.S.C. 554 or otherwise involving a determination on the record after opportunity for a hearing.

(b) Before a meeting is closed to public observation the Council shall determine whether or not the public interest requires that the meeting be open. The Council may open a meeting to public observation which could be closed under paragraph (a) of this section, if the Council finds it to be in the public interest to do so.

§ 1517.5 Procedure for closing meetings.

(a) A majority of the entire membership of the Council may vote to close to public observation a meeting or a portion or portions thereof, or to withhold information pertaining to such meeting. A separate vote of the members of the Council shall be taken with respect to each meeting of the Council, a portion or portions of which are proposed to be closed to the observation of the public or with respect to any information concerning such meetings or portion thereof. A single vote may be taken with respect to a series of meetings, a portion or portions of which are proposed to be closed to the public, or with respect to information concerning such series of meetings, so long as each meeting in such series involves the same particular matters and is scheduled to be held no more than thirty days after the initial meeting in such series. The vote of each member of the Council participating in a vote shall be recorded and no proxies shall be allowed.

(b) Whenever any person whose interest may be directly affected by a portion of a meeting requests that the Council close that portion to public observation for any of the reasons referred to in § 1517.4(a) the Council, upon request of any of the members of the Council, shall decide by recorded vote whether to close that portion of the meeting.

(c) For every meeting or portion thereof closed under this part, the General Counsel of the Council before such meeting is closed shall publicly certify that, in his or her opinion, the meeting may properly be closed to the public stating each relevant exemptive provision. The Council shall retain a copy of the General Counsel's certification, together with a statement from the presiding officer of the meeting setting forth the time and place of the meeting and listing the persons present.

(d) Within one day of any vote taken on a proposal to close a meeting, the Council shall make publicly available a record reflecting the vote of each member on the question. In addition, within one day of any vote which closes a portion or portions of a meeting to the public, the Council shall make publicly

available a full written explanation of its closure action together with a list naming all persons expected to attend and identifying their affiliation, unless such disclosure would reveal the information that the meeting itself was closed to protect.

(e) Following any announcement that the Council intends to close a meeting or portion thereof, any person may make a request that the meeting or portion thereof be opened. Such request shall be made of the Chairman of the Council who shall ensure that the request is circulated to all members of the Council on the same business day on which it is received. The request shall set forth the reasons why the requestor believes the meeting should be open. The Council upon the request of any member or its General Counsel, shall vote on the request.

§ 1517.6 Notice of meetings.

(a) Except as otherwise provided in this section, the Council shall make a public announcement at least one week before a meeting, to include the following:

(1) Time, place, and subject matter of the meeting;

(2) Whether the meeting is to be open or closed; and

(3) Name and telephone number of the official who will respond to requests for information about the meeting.

(b) A majority of the members of the Council may determine by recorded vote that the business of the Council requires a meeting to be called with less than one week's notice. At the earliest practicable time, the Council shall publicly announce the time, place and subject matter of the meeting, and whether or not it is to be open or closed to the public.

(c) If announcement of the subject matter of a closed meeting would reveal the information that the meeting itself was closed to protect, the subject matter shall not be announced.

(d) Following the public announcement required by paragraph (a) or (b) of this section:

(1) A majority of the members of the Council may change the time or place of a meeting. At the earliest practicable time, the Council shall publicly announce the change.

(2) A majority of the entire membership of the Council may change the subject matter of a meeting, or the determination to open or close a meeting to the public, if it determines by a recorded vote that the change is required by the business of the Council and that no earlier announcement of the change was possible. At the earliest practicable time, the Council shall publicly announce the change, and the vote of each member upon the change.

(e) Individuals or organizations having a special interest in activities of the Council may request the Council to place them on a mailing list for receipt of information available under this section.

(f) Following public announcement of a meeting, the time or place of a meeting may be changed only if the change is announced publicly at the earliest practicable time. The subject matter of a meeting or the determination to open or close a meeting may be changed following public announcement of a meeting only if both of the following conditions are met:

(1) There must be a recorded vote of a majority of the Council that the business of the Council requires the change and that no earlier announcement of such change was possible; and

(2) There must be a public announcement of the change and of the individual Council members' votes at the earliest practicable time.

(g) Immediately following each public announcement required by this section, the following information, as applicable, shall be submitted for publication in the FEDERAL REGISTER.

(1) Notice of the time, place, and subject matter of a meeting;

(2) Whether the meeting is open or closed;

(3) Any change in one of the preceding; and

(4) The name and telephone number of the official who will respond to requests for information about the meeting.

§ 1517.7 Records of closed meetings.

(a) A record of each meeting or portion thereof which is closed to the public shall be made and retained for two

years or for one year after the conclusion of any Council proceeding involved in the meeting whichever occurs later. The record of any portion of a meeting closed to the public shall be a verbatim transcript or electronic recording. In lieu of a transcript or recording, a comprehensive set of minutes may be produced if the closure decision was made pursuant to §1517.4(a)(8) or (10).

(b) If minutes are produced, such minutes shall fully and clearly describe all matters discussed, provide a full and accurate summary of any actions taken and the reasons expressed therefor, and include a description of each of the views expressed on any item. The minutes shall also reflect the vote of each member of the Council on any roll call vote taken during the proceedings and identify all documents produced at the meeting.

(c) The following documents shall be retained by the Council as part of the transcript, recording, or minutes of the meeting:

(1) Certification by the General Counsel that the meeting may properly be closed; and

(2) Statement from the presiding officer of the meeting setting forth the date, time, and place of the meeting and listing the persons present.

(d) The Council shall make promptly available to the public at its offices at 722 Jackson Place, NW., Washington, DC the transcript, electronic recording, or minutes maintained as a record of a closed meeting, except for such information as may be withheld under one of the provisions of §1517.5. Copies of such transcript, minutes, or transcription of an electronic recording, disclosing the identity of each speaker, shall be furnished to any person at the actual cost of duplication or transcription.

(e) [Reserved]

(f) Requests to review or obtain copies of records other than transcripts, electronic recordings or minutes of a meeting will be processed under the Freedom of Information Act (5 U.S.C. 552) or, where applicable, the Privacy Act of 1974. (5 U.S.C. 552a). Nothing in these regulations authorizes the Council to withhold from any individual any record, including the transcripts or electronic recordings described in §1517.8, to which the individual may have access under the Privacy Act of 1974 (5 U.S.C. 552a).

PART 1518—OFFICE OF ENVIRONMENTAL QUALITY MANAGEMENT FUND

Sec.
1518.1 Purpose.
1518.2 Definitions.
1518.3 Policy.
1518.4 Procedures.

AUTHORITY: 42 U.S.C. 4375(c).

SOURCE: 67 FR 62189, Oct. 4, 2002, unless otherwise noted.

§1518.1 Purpose.

The purpose of the OEQ Management Fund is to finance:

(a) Study contracts that are jointly sponsored by OEQ and one or more other Federal agency; and

(b) Federal interagency environmental projects (including task forces) in which OEQ participates. *See* 42 U.S.C. 4375(a).

§1518.2 Definitions.

(a) *Advance Payment:* Amount of money prepaid pursuant to statutory authorization in contemplation of the later receipt of goods, services, or other assets.

(b) *Director:* The Director of the Office of Environmental Quality. The Environmental Quality Improvement Act specifies that the Chairman of the Council on Environmental quality shall serve as the Director of OEQ. 42 U.S.C. 4372(a).

(c) *OEQ Management Fund (''Fund''):* The Management Fund for the Office of Environmental Quality.

(d) *Interagency Agreement:* A document jointly executed by OEQ and another agency or agencies, which sets forth the details of a joint study or project and the funding arrangements for such a study or project.

(e) *Project Officer:* The Council on Environmental Quality staff member charged with day-to-day supervision of an OEQ Management Fund study or project.

(f) *Source:* The agency or account from which funds are contributed into the Fund.

§ 1518.3 Policy.

(a) All studies and projects financed through the OEQ Management Fund shall be consistent with the purposes and goals of the National Environmental Policy Act and/or the Environmental Quality Improvement Act.

(b) Agency funds accepted by the Director for transfer into the OEQ Management Fund shall specify the purposes permissible under the source appropriation and any restrictions relating thereto.

(c) The Director may authorize expenditures to support OEQ Management Fund studies and projects, including:

(1) Leasing office space and providing utilities;

(2) Leasing or purchasing equipment;

(3) Funding travel;

(4) Contracting for goods and services; and

(5) Funding consultants and personnel costs for task force employees.

(d) In carrying out the purposes of the OEQ Management Fund, the Director is authorized to contract with public or private agencies, institutions, organizations and individuals, by negotiation, without regard to 31 U.S.C. 3324(a) and (b) 41 U.S.C. 5, and 42 U.S.C. 4372(e). All such contracting activities shall be accomplished through the Office of Administration, Executive Office of the President. The Director may, by interagency agreement with another federal agency or agencies and with the concurrence of the Office of Administration's Financial Management Division, obtain specific administrative services (including contracting activities) in support of OEQ Management Fund studies or projects.

(e) Task forces and projects funded by the OEQ Management Fund are permitted to make expenditures for all project and study activities, except for compensation or benefits for full-time OEQ employees or to reimburse OEQ or CEQ for ordinarily appropriated expenses, such as salaries, benefits, rent, telephone and supplies.

§ 1518.4 Procedures.

(a) *Charters:* (1) A charter must be prepared for each project or study to be financed and supported by the OEQ Management Fund.

(2) The charter must clearly state the relation of the study or project to the goals and purposes of the Office of Environmental Quality and the National Environmental Policy Act; describe the study or project; identify the participating agency or agencies; provide the names, titles and phone numbers of the Project Officer and administrative contact.

(3) Charters may be amended by preparing a formal amendment, which sets forth the new language to be incorporated in the existing charter.

(4) The Director shall approve all Management Fund charters and amendments in writing.

(5) Copies of each charter and charter amendment approved by the Director shall be provided to the Contracts Branch and the Financial Management Division of the Office of Administration, Executive Office of the President.

(b) *Finances and accounting:* (1) Annual budget estimates shall be prepared for the OEQ Management Fund.

(2) An operating budget for each project or study shall be submitted to the Financial Management Division of the Office of Administration, Executive Office of the President.

(3) All contributions from other agencies to the OEQ Management Fund for a joint study or project shall be accomplished by interagency agreements, which shall provide for full payment of funds on an advance basis. 42 U.S.C. 4375(a).

(4) All contributions by the Office of Environmental Quality or the Council on Environmental Quality to the OEQ Management Fund for a joint study or project shall be accomplished by a letter of transmittal which specifies the particular study or project to be funded. A copy of this transmittal letter shall be provided to the Financial Management Division of the Office of Administration, Executive Office of the President.

(5) The OEQ Management Fund is a no-year appropriations account, which can accept one-year or multiple-year funds, and is available until the objectives for which the authority was made available are attained. Funds transferred into the Management Fund are individually accounted for and expire under the terms of their appropriation.

(6) Any agency, including the Office of Environmental Quality and the Council on Environmental Quality, may provide technical expertise, physical resources, facilities, equipment, or other assets; perform support or administrative services; or assign detailees or agency representatives to an OEQ Management Fund project or study. These contributions may be in addition to funding.

(7) Subaccounts shall be established within OEQ Management Fund for each project or study. All expenditures for a particular project or study must be matched with the source contribution and approved by the Director or the Project Officer.

(8) The Director may transfer Management Fund resources for any study or project to other federal accounts or other OEQ subaccounts provided that the transfer:

(i) Is approved in writing by the source agency that provided the portion of the funds being transferred;

(ii) Promotes the statutory mission of OEQ; and

(iii) Is justified by the Director as being in the best interests of the government.

(9) Financial transactions shall be classified under each Management Funds subaccount in sufficient detail to satisfy management planning, control requirements and financial audit requirements.

(10) All fund expenditures must comport with the purposes of the Management Fund and follow CEQ approval procedures. Any fund expenditures pursuant to interagency agreement for the provision of administrative services shall comport with the CEQ approval procedures specified in the interagency agreement.

PARTS 1519–1599 [RESERVED]

CHAPTER VI—CHEMICAL SAFETY AND HAZARD INVESTIGATION BOARD

Part		*Page*
1600	Organization and functions of the Chemical Safety and Hazard Investigation Board	651
1601	Procedures for disclosure of records under the Freedom of Information Act	652
1602	Protection of privacy and access to individual records under the Privacy Act of 1974	668
1603	Rules implementing the Government in the Sunshine Act	672
1604	Reporting of accidental releases	677
1610	Administrative investigations	679
1611	Testimony by employees in legal proceedings	681
1612	Production of records in legal proceedings	684
1613–1619	[Reserved]	
1620	Administrative claims arising under the Federal Tort Claims Act	685
1621–1699	[Reserved]	

PART 1600—ORGANIZATION AND FUNCTIONS OF THE CHEMICAL SAFETY AND HAZARD INVESTIGATION BOARD

Sec.
1600.1 Purpose.
1600.2 Organization.
1600.3 Functions.
1600.4 Operation.
1600.5 Quorum and voting requirements.
1600.6 Office location.

AUTHORITY: 5 U.S.C. 301, 552(a)(1); 42 U.S.C. 7412(r)(6)(N).

SOURCE: 68 FR 65403, Nov. 20, 2003, unless otherwise noted.

§ 1600.1 Purpose.

This part describes the organization, functions, and operation of the Chemical Safety and Hazard Investigation Board (CSB). The CSB is an independent agency of the United States created by the Clean Air Act Amendments of 1990 [Pub. L. 101–549, 104 Stat. 2399, codified at 42 U.S.C. 7412(r)(6) *et seq.*]. Information about the CSB is available from its Web site, *http://www.csb.gov*.

§ 1600.2 Organization.

(a) The CSB's Board consists of five Members appointed by the President with the advice and consent of the Senate. The President designates one of the Members as Chairperson with the advice and consent of the Senate. The Members exercise various functions, powers, and duties set forth in the Clean Air Act Amendments of 1990 (42 U.S.C. 7412(r)(6) *et seq.*).

(b) The CSB's staff is comprised of the following administrative units:

(1) The Office of the Chief Operating Officer;

(2) The Office of Investigations and Safety Programs;

(3) The Office of the General Counsel;

(4) The Office of Financial Operations;

(5) The Office of Management Operations; and

(6) The Office of Equal Employment Opportunity.

§ 1600.3 Functions.

(a) The CSB investigates chemical accidents and hazards, recommending actions to protect workers, the public, and the environment. The CSB is responsible for the investigation and determination of the facts, conditions, and circumstances and the cause or probable cause or causes of any accidental release resulting in a fatality, serious injury, or substantial property damages.

(b) The CSB makes safety recommendations to Federal, State, and local agencies, including the Environmental Protection Agency and the Occupational Safety and Health Administration and private organizations to reduce the likelihood of recurrences of chemical incidents. It initiates and conducts safety studies and special investigations on matters pertaining to chemical safety.

(c) The CSB issues reports pursuant to its duties to determine the cause or probable cause or causes of chemical incidents and to report the facts, conditions, and circumstances relating to such incidents; and issues and makes available to the public safety recommendations, safety studies, and reports of special investigations.

§ 1600.4 Operation.

In exercising its functions, duties, and responsibilities, the CSB utilizes:

(a) The CSB's staff, consisting of specialized offices performing investigative, administrative, legal, and financial work for the Board.

(b) Rules published in the FEDERAL REGISTER and codified in this title of the Code of Federal Regulations.

(c) Meetings of the Board Members conducted pursuant to the Government in the Sunshine Act and part 1603 of this title (CSB Rules Implementing the Government in the Sunshine Act) or voting by notation as provided in § 1600.5(b).

(d) Public hearings in connection with incident or hazard investigations.

§ 1600.5 Quorum and voting requirements.

(a) *Quorum requirements.* A quorum of the Board for the transaction of business shall consist of three Members; provided, however, that if the number of Board Members in office is fewer than three, a quorum shall consist of the number of Members in Office; and provided further that on any matter of

business as to which the number of Members in office, minus the number of Members who have disqualified themselves from consideration of such matter is two, two Members shall constitute a quorum for purposes of such matter. Once a quorum is constituted, a simple majority of voting Members is required to approve an item of the Board's business. A tie vote results in no action.

(b) *Voting*. The Board votes on items of business in meetings conducted pursuant to the Government in the Sunshine Act. Alternatively, whenever a Member of the Board is of the opinion that joint deliberation among the members of the Board upon any matter at a meeting is unnecessary in light of the nature of the matter, impracticable, or would impede the orderly disposition of agency business, such matter may be disposed of by employing notation voting procedures. A written notation of the vote of each participating Board member shall be recorded by the General Counsel who shall retain it in the records of the Board. If a Board member votes to calendar a notation item, the Board must consider the calendared notation item at a public meeting of the Board within 90 days of the date on which the item is calendared. A notation vote to schedule a public meeting may not be calendared. The Chairperson shall add any calendared notation item to the agenda for the next CSB public meeting if one is to occur within 90 days or to schedule a special meeting to consider any calendared notation item no later than 90 days from the calendar action.

(c) *Public meetings and agendas*. The Chairperson, or in the absence of a chairperson, a member designated by the Board, shall schedule a minimum of four public meetings per year in Washington, DC, to take place during the months of October, January, April, and July.

(1) *Agenda*. The Chairperson, or in the absence of a chairperson, a member designated by the Board, shall be responsible for preparation of a final meeting agenda. The final agenda may not differ in substance from the items published in the Sunshine Act notice for that meeting. Any member may submit agenda items related to CSB business for consideration at any public meeting, and the Chairperson shall include such items on the agenda. At a minimum, each quarterly meeting shall include the following agenda items:

(i) Consideration and vote on any notation items calendared since the date of the last public meeting;

(ii) A review by the Board of the schedule for completion of all open investigations, studies, and other important work of the Board; and

(iii) A review and discussion by the Board of the progress in meeting the CSB's Annual Action Plan.

(2) *Publication of agenda information*. The Chairperson shall be responsible for posting information related to any agenda item that is appropriate for public release on the CSB Web site no less than two days prior to a public meeting.

[68 FR 65403, Nov. 20, 2003, as amended at 80 FR 46824, Aug. 6, 2015]

§ 1600.6 Office location.

The principal offices of the Chemical Safety and Hazard Investigation Board are located at 2175 K Street NW, Washington, DC 20037.

PART 1601—PROCEDURES FOR DISCLOSURE OF RECORDS UNDER THE FREEDOM OF INFORMATION ACT

Subpart A—Purpose, Scope, and Applicability

Sec.
1601.1 Purpose and scope.
1601.2 Applicability.

Subpart B—Procedures for Requesting and Disclosing Records

1601.10 Proactive disclosures.
1601.11 Requirements for making requests.
1601.12 Responsibility for responding to requests.
1601.13 Timing of responses to requests.
1601.14 Responses to requests.
1601.15 Special procedures for confidential commercial information.

Subpart C—Appeals

1601.20 Processing of appeals.

Subpart D—Administration

1601.30 Protection of records.
1601.31 Preservation of records pertaining to requests under this part.
1601.32 Other rights and services.

Subpart E—Fees

1601.40 Procedures for fees.

AUTHORITY: 5 U.S.C. 552.

SOURCE: 82 FR 45502, Sept. 29, 2017, unless otherwise noted.

Subpart A—Purpose, Scope, and Applicability

§ 1601.1 Purpose and scope.

(a) *In general.* This part contains the Chemical Safety and Hazard Investigation Board (''CSB'' or ''agency'') regulations implementing the Freedom of Information Act (''FOIA''), 5 U.S.C. 552. These regulations provide the procedures by which members of the public may obtain access to records compiled, created, and maintained by the CSB, along with the CSB procedures for responding to such requests. The rules in this subpart are to be read in conjunction with the FOIA and the Uniform Freedom of Information Fee Schedule and Guidelines published by the White House Office of Management and Budget (OMB Guidelines).

(b) *Definitions.*

(1) *Chairperson* means the Chairperson of the CSB.

(2) *Chief FOIA Officer* means the person designated by Chairperson who has overall responsibility for the CSB's compliance with the FOIA.

(3) *FOIA Officer* means a person designated by the Chief FOIA Officer to process requests for the CSB documents under the FOIA.

(4) *Record* means information regardless of its physical form or characteristics including information created, stored, and retrievable by electronic means that is created or obtained by the CSB and under the control of the CSB at the time of the request, including information maintained for the CSB by an entity under Government contract for records management purposes. *Record* includes any writing, drawing, map, recording, tape, film, photo, or other documentary material by which information is preserved.

(5) *Requester* means any person, including an individual, Indian tribe, partnership, corporation, association, or public or private organization other than a Federal agency that requests access to records in the possession of the CSB pursuant to 5 U.S.C. 552.

§ 1601.2 Applicability.

(a) *In general.* The FOIA and the regulations in this part apply to all CSB documents and information. However, if another law sets specific procedures for disclosure that supersede the FOIA, then CSB must process a request in accordance with the procedures that apply to those specific documents. If a request is received for disclosure of a document to the public that is not required to be released under the provisions of law other than the FOIA, then the CSB must consider the request under the FOIA and the regulations in this part. Requests made by individuals for records about themselves under the Privacy Act of 1974, 5 U.S.C. 552a, are processed in accordance with CSB's Privacy Act regulations (part 1602 of this chapter), as well as under this subpart.

(b) *Disclosure of requested records.* The CSB will only withhold information under the FOIA if the agency reasonably foresees that disclosure would harm an interest protected by an exemption or disclosure is prohibited by law. The FOIA Officer will make requested records available to the public to the greatest extent possible in keeping with the FOIA, except for the following types of records, which are exempt from the disclosure requirements:

(1) Records specifically authorized under criteria established by an Executive Order (E.O.) to be kept secret in the interest of national defense or foreign policy and which are, in fact, properly classified pursuant to such E.O.;

(2) Records related solely to the internal personnel rules and practices of the CSB;

(3) Records specifically exempted from disclosure by statute (other than 5 U.S.C. 552(b)) provided that such statute requires that the matters be withheld from the public in such a manner as to leave no discretion on the issue or that the statute establishes particular

criteria for withholding information or refers to particular types of matters to be withheld; and if enacted after the date of enactment of the OPEN FOIA Act of 2009, specifically cites to 5 U.S.C. 552(b)(3);

(4) Records containing trade secrets and commercial or financial information obtained from a person and privileged or confidential;

(5) Interagency or intra-agency memoranda or letters which would not be available by law to a party other than an agency in litigation with the CSB, provided that the deliberative process privilege shall not apply to records created twenty-five (25) years or more before the date on which the records were requested;

(6) Personnel and medical files and similar files the disclosure of which would constitute a clearly unwarranted invasion of personal privacy;

(7) Records or information compiled for law enforcement purposes, but only to the extent that the production of such law enforcement records or information:

(i) Could reasonably be expected to interfere with enforcement proceedings;

(ii) Would deprive a person of a right to a fair trial or an impartial adjudication;

(iii) Could reasonably be expected to constitute an unwarranted invasion of personal privacy;

(iv) Could reasonably be expected to disclose the identity of a confidential source, including a State, local or foreign agency or authority or any private institution which furnished information on a confidential basis, and in the case of a record or information compiled by criminal law enforcement authority in the course of a criminal investigation or by an agency conducting a lawful national security intelligence investigation, information furnished by a confidential source;

(v) Would disclose techniques and procedures for law enforcement investigations or prosecutions, or would disclose guidelines for law enforcement investigations or prosecutions if such disclosure could reasonably be expected to risk circumvention of the law; or

(vi) Could reasonably be expected to endanger the life or physical safety of any individual.

(8) Records contained in or related to examination, operating, or condition reports prepared by, or on behalf of, or for the use of an agency responsible for the regulation or supervision of financial institutions;

(9) Geological or geophysical information and data, including maps, concerning wells.

(c) *Disclosure of segregable nonexempt material.* The CSB will consider whether partial disclosure of information is possible whenever the agency determines that a full disclosure of a requested record is not possible. If a requested record contains exempted material along with nonexempted material, all reasonably segregable nonexempt material must be disclosed.

(d) *Records available through routine distribution procedures.* If the record requested includes material published and offered for sale, *e.g.*, by the Superintendent of Documents of the Government Printing Office, or by an authorized private distributor, then the CSB will refer the requester to those sources. Nevertheless, if the requester is not satisfied with the alternative sources, then the CSB will process the request under its usual FOIA procedures, noting that the CSB will likely withhold copyrighted records under Exemption 4.

Subpart B—Procedures for Requesting and Disclosing Records

§ 1601.10 Proactive disclosures.

(a) *In general.* Records that the FOIA requires the CSB to make available for public inspection in an electronic format may be accessed through the CSB's Web site (which can be found at *http://www.csb.gov/disclaimers/legal-affairs-foia/*). The CSB is responsible for determining which of its records must be made publicly available, for identifying additional records of interest to the public that are appropriate for public disclosure, and for posting and indexing such records. The CSB must ensure that its Web site of posted records and indices is reviewed and updated on an ongoing basis. The CSB has a FOIA

Contact and FOIA Public Liaison who can assist individuals in locating records particular to the CSB. The most up to date contact information for the CSB's FOIA Contact and the CSB's FOIA Public Liaison is available at *http://www.foia.gov/report-makerequest.html*.

(b) *Definitions*.

(1) *Disclose or disclosure* means making records available for examination or copying, or furnishing a copy of non-exempt responsive records.

(2) *FOIA Contact* means the name, address and phone number at the CSB where a requester can make a FOIA request.

(3) *FOIA Public Liaison* means the official who supervises the FOIA Requester Service Center.

§ 1601.11 Requirements for making requests.

(a) *General information*. (1) To make a request for records, a requester should write directly to the FOIA office of the agency that maintains the records sought. A request will receive the quickest possible response if the request is addressed to the FOIA office of the agency that maintains the records sought. If the CSB is the agency that maintains the records sought, then the contact information for the CSB's FOIA office is listed at *http://www.foia.gov/report-makerequest.html*, and any additional requirements for submitting a request can be found herein. Additionally, requesters who have questions or concerns about making a request, and those who have made a request who have questions or concerns, may discuss their request(s) with the CSB's FOIA Contact or FOIA Public Liaison.

(2) A requester who is making a request for records about himself or herself must comply with the verification of identity requirements described in this section. Requesters must provide either a notarized statement or a statement signed under penalty of perjury stating that the requester is the person they claim to be. This certification is required in order to protect the requester's privacy and to ensure that private information about the requester is not disclosed inappropriately to another individual.

(3) Where a request for records pertains to a third party, a requester may receive greater access by submitting either a notarized authorization signed by that individual or a declaration made in compliance with the requirements set forth in 28 U.S.C. 1746 by that individual authorizing disclosure of the records to the requester, or by submitting proof that the individual is deceased (*e.g.*, a copy of a death certificate or an obituary). As an exercise of administrative discretion, the CSB can require a requester to supply additional information, if necessary, in order to verify that a particular individual has consented to disclosure.

(b) *Addressing requests*. (1) All requests for records to the CSB must be made in writing.

(2) *For hard copy requests:* The envelope and the request both should be clearly marked ''FOIA Request'' and addressed to: Chief FOIA Officer—FOIA Request, Chemical Safety and Hazard Investigation Board, 1750 Pennsylvania Ave. NW., Suite 910, Washington, DC 20006.

(3) *For electronic requests:* The subject line of the request should be marked ''FOIA Request'' and the request may be submitted by email to *foia@csb.gov*.

(4) A request that is improperly addressed will be deemed to have been received by the CSB on the date that it is actually received by the CSB, or would have been received with the exercise of due diligence, by the FOIA Officer.

(c) *Description of records sought*. (1) Requesters must describe the records sought in sufficient detail to enable the CSB's personnel to locate them with a reasonable amount of effort.

(2) To the extent possible, requesters should include specific information that may help the CSB identify the requested records, such as the date, title or name, author, recipient, subject matter of the record, case number, file designation, or reference number. In general, requesters should include as much detail as possible about the specific records or the types of records that they are seeking. Before submitting their requests, requesters may contact the CSB's FOIA Contact or FOIA Public Liaison to discuss the

records they seek and to receive assistance in describing the records.

(3) If, after receiving a request, the CSB determines that the request does not reasonably describe the records sought, then the CSB must inform the requester what additional information is needed or why the request is otherwise insufficient. Requesters who are attempting to reformulate or modify such a request may discuss their request with the CSB's FOIA Contact or with the CSB's FOIA Public Liaison. If a request does not reasonably describe the records sought, the CSB's response to the request may be delayed.

(d) *Form of records.* Requests may specify the preferred form or format (including electronic formats) for the records that the requester seeks. The CSB must accommodate requests if the record is readily reproducible in that form or format. If a person seeks information from the CSB in a format that does not currently exist, then the CSB must make reasonable efforts to provide the information in the format requested. The CSB will not create a new record of information to satisfy a request.

(e) *Contact information.* Requesters must provide their first and last name along with their contact information, such as their phone number, email address, and/or mailing address, to assist the CSB in communicating with them and providing released records.

(f) *Agreement to pay fees.* The CSB considers a FOIA request an agreement by the requester to pay all applicable fees charged unless the requester seeks a waiver of fees. The CSB ordinarily will confirm this agreement in an acknowledgement letter. The CSB will not charge any fee if the total cost of the response is less than $25.00. See § 1601.40 [discussing fees in more detail]. If the fee will be greater than $25.00, then the CSB must contact the requester to discuss how the requester wants to proceed.

(g) *Types of records not available.* The FOIA does not require the CSB to:

(1) Compile or create records solely for the purpose of satisfying a request for records;

(2) Provide records not yet in existence, even if such records may be expected to come into existence at some future time; or

(3) Restore records destroyed or otherwise disposed of, except that the FOIA Officer must notify the requester that the requested records have been destroyed or otherwise disposed of.

§ 1601.12 Responsibility for responding to requests.

(a) *In general.* The agency that first receives a request for a record and maintains that record is the agency responsible for responding to the request. In determining which records are responsive to a request, the CSB ordinarily will include only records in its possession as of the date that it begins its search. If any other date is used, the CSB must inform the requester of that date. A record that is excluded from the requirements of the FOIA pursuant to 5 U.S.C. 552(c), is not considered responsive to a request.

(b) *Authority to grant or deny requests.* The Chief FOIA Officer or a designee is authorized to grant or to deny any initial request for records that are maintained by the CSB and to determine any appropriate fees.

(c) *Consultation, referral, and coordination.* When reviewing records, the CSB must determine whether another agency of the Federal Government is better able to determine whether the record is exempt from disclosure under the FOIA. As to any such record, the CSB must proceed in one of the following ways:

(1) *Consultation.* When records originated with the CSB, but contain within them information of interest to another agency or other Federal Government office, the CSB should consult with that other entity prior to making a release determination.

(2) *Referral.* (i) When the CSB believes that a different agency or component of a different agency is best able to determine whether to disclose the record, the CSB should refer the responsibility for responding to the request regarding that record to that agency or component. Ordinarily, the agency that originated the record is presumed to be the best agency to make the disclosure determination. However, if the CSB and the originating agency jointly agree that the CSB is in the best position to

respond regarding the record, then the record may be handled as a consultation.

(ii) Whenever the CSB refers any part of the responsibility for responding to a request to another agency, it must document the referral, maintain a copy of the record that it refers, and notify the requester of the referral, informing the requester of the name(s) of the agency to which the record was referred, including that agency's FOIA contact information.

(3) *Coordination*. The standard referral procedure is not appropriate where disclosure of the identity of the agency to which the referral would be made could harm an interest protected by an applicable exemption, such as the exemptions that protect personal privacy or national security interests. For example, if a non-law enforcement agency responding to a request for records on a living third party locates within its files records originating with a law enforcement agency, and if the existence of that law enforcement interest in the third party was not publicly known, then to disclose that law enforcement interest could cause an unwarranted invasion of the personal privacy of the third party. Similarly, if an agency locates within its files material originating with an Intelligence Community agency, and the involvement of that agency in the matter is classified and not publicly acknowledged, then to disclose or give attribution to the involvement of that Intelligence Community agency could cause national security harms. In such instances, in order to avoid harm to an interest protected by an applicable exemption, the CSB must coordinate with the originating agency to seek its views on whether the record can be disclosed. The release determination for the record that is the subject of the coordination will then be conveyed to the requester by the CSB.

(d) *Classified information*. Upon receipt of any request involving classified information, the CSB must determine whether the information is currently and properly classified in accordance with applicable classification rules. Whenever a request involves a record containing information that has been classified or may be appropriate for classification by another agency under any applicable E.O. concerning the classification of records, the CSB must refer the responsibility for responding to the request regarding that information to the agency that classified the information, or to the agency that should consider the information for classification. Whenever the CSB's record contains information that has been derivatively classified (for example, when it contains information classified by another agency), the CSB must refer the responsibility for responding to that portion of the request to the agency that classified the underlying information.

(e) *Timing of responses to consultations and referrals*. All consultations and referrals received by the CSB must be handled according to the date that the first agency received the perfected FOIA request.

(f) *Agreements regarding consultations and referrals*. The CSB may establish agreements with other agencies to eliminate the need for consultations or referrals with respect to particular types of records.

(g) *No responsive record*. If no records are responsive to the request, the FOIA Officer will so notify the requester in writing.

§ 1601.13 Timing of responses to requests.

(a) *In general*. The CSB ordinarily will respond to requests according to their order of receipt.

(b) *Definitions*.

(1) *Working day* means a Federal workday; Saturdays, Sundays, and Federal holidays are excluded in computing the response time for processing FOIA requests.

(2) [Reserved]

(c) *Multitrack processing*. The CSB has a specific track for requests that are granted expedited processing, in accordance with the standards set forth in paragraph (f) of this section. In addition, the CSB uses two standard processing tracks- one for simple requests and a separate track for complex requests. The CSB will assign requests to the simple or complex track based on the estimated amount of work or time needed to process the request. Among the factors the CSB may consider are

the number of records requested, the number of pages involved in processing the request and the need for consultations or referrals. The CSB must advise each requester of the track into which their request falls and, when appropriate, will offer a requester an opportunity to narrow or modify their request so that it can be placed in the simple processing track.

(d) *Unusual circumstances.* Whenever the CSB cannot meet the statutory time limit for processing a request because of ''unusual circumstances,'' as defined in the FOIA, and the CSB extends the time limit on that basis, the CSB must, before expiration of the twenty (20) day period to respond, notify the requester in writing of the unusual circumstances involved and of the date by which the CSB estimates processing of the request will be completed. Where the extension exceeds ten (10) working days, the CSB must, as described by the FOIA, provide the requester with an opportunity to modify the request or arrange an alternative time period for processing the original or modified request. The CSB must make available its designated FOIA Contact or its FOIA Public Liaison for this purpose. A list of agency FOIA Public Liaisons is available at *http://www.foia.gov/report-makerequest.html*. The CSB must also alert requesters to the availability of the Office of Government Information Services (OGIS) to provide dispute resolution services.

(e) *Aggregating requests.* To satisfy unusual circumstances under the FOIA, the CSB may aggregate requests in cases where it reasonably appears that multiple requests, submitted either by a requester, or by a group of requesters acting in concert, constitute a single request that would otherwise involve unusual circumstances. The CSB must not aggregate multiple requests that involve unrelated matters.

(f) *Expedited processing.* (1) The CSB must process requests and appeals on an expedited basis whenever it is determined that they involve:

(i) Circumstances in which the lack of expedited processing could reasonably be expected to pose an imminent threat to the life or physical safety of an individual;

(ii) An urgency to inform the public about an actual or alleged Federal Government activity, if made by a person who is primarily engaged in disseminating information;

(iii) The loss of substantial due process rights; or

(iv) A matter of widespread and exceptional media interest in which there exists possible questions about the government's integrity that affect public confidence.

(2) A request for expedited processing may be made at any time. Requests based on paragraphs (f)(1)(i) through (iv) of this section must be submitted to the CSB. When making a request for expedited processing of an administrative appeal, the request must be submitted to the CSB's FOIA Appeals Officer in accordance with § 1601.20.

(3) A requester who seeks expedited processing must submit a statement, certified to be true and correct, explaining in detail the basis for making the request for expedited processing. For example, under paragraph (f)(1)(ii) of this section, a requester who is not a full-time member of the news media must establish that the requester is a person whose primary professional activity or occupation is information dissemination, though it need not be the requester's sole occupation. Such a requester also must establish a particular urgency to inform the public about the government activity involved in the request—one that extends beyond the public's right to know about government activity generally. The existence of numerous articles published on a given subject can be helpful in establishing the requirement that there be an ''urgency to inform'' the public on the topic. As a matter of administrative discretion, the CSB may waive the formal certification requirement.

(4) The CSB must notify the requester within ten (10) calendar days of the receipt of a request for expedited processing of its decision whether to grant or deny expedited processing. If expedited processing is granted, then the request must be given priority, placed in the processing track for expedited requests, and must be processed as soon as practicable. If a request for expedited processing is denied, then the

CSB must act on any appeal of that decision expeditiously.

§ 1601.14 Responses to requests.

(a) *In general.* The CSB, to the extent practicable, will communicate electronically with requesters having access to the Internet, such as by email or web portal.

(b) *Acknowledgments of requests.* The CSB must acknowledge the request in writing and assign it an individualized tracking number if it will take longer than ten (10) working days to process. The CSB must include in the acknowledgment a brief description of the records sought to allow requesters to more easily keep track of their requests.

(c) *Estimated dates of completion and interim responses.* Upon request, the CSB must provide an estimated date by which the CSB expects to provide a response to the requester. If a request involves a voluminous amount of material, or searches in multiple locations, the CSB may provide interim responses, releasing the records on a rolling basis.

(d) *Grants of requests.* Once the CSB determines it will grant a request in full or in part, it must notify the requester in writing. The notice must describe the manner in which the record or records will be disclosed, whether by providing a copy of the record or records with the response, or providing them at a later date, or by making a copy of the record available to the requester for inspection at a reasonable time and place. The procedure for such an inspection must not unreasonably disrupt the operation of the CSB. The CSB must also inform the requester of any fees charged under § 1601.40 and must disclose the requested records to the requester promptly upon payment of any applicable fees. The CSB must inform the requester of the availability of its FOIA Public Liaison to offer assistance.

(e) *Adverse determinations of requests.* If the CSB makes an adverse determination denying a request in any respect, it must notify the requester of that determination in writing. Adverse determinations, or denials of requests, include decisions that: The requested record is exempt, in whole or in part; the request does not reasonably describe the records sought; the information requested is not a record subject to the FOIA; the requested record does not exist, cannot be located, or has been destroyed; or the requested record is not readily reproducible in the form or format sought by the requester. Adverse determinations also include denials involving fees or fee waiver matters or denials of requests for expedited processing.

(f) *Content of denial.* The denial must be signed by the Chairperson or the FOIA Officer and must include:

(1) The name and title or position of the person responsible for the denial;

(2) A brief statement of the reasons for the denial, including any FOIA exemption(s) applied by the CSB in denying the request;

(3) An estimate of the volume of any records or information withheld, such as the number of pages or some other reasonable form of estimation, although such an estimate is not required if the volume is otherwise indicated by deletions marked on records that are disclosed in part or if providing an estimate would harm an interest protected by an applicable exemption; and

(4) A statement that the denial may be appealed under § 1601.20, and a description of the appeal requirements.

(5) A statement notifying the requester of the assistance available from the CSB's FOIA Public Liaison and the dispute resolution services offered by the OGIS.

(g) *Markings on released documents.* Records disclosed in part must be marked clearly to show the amount of information deleted and the exemption under which the deletion was made unless doing so would harm an interest protected by an applicable exemption. The location of the information deleted must also be indicated on the record, if technically feasible.

(h) *Use of record exclusions.* (1) In the event that the CSB identifies records that may be subject to exclusion from the requirements of the FOIA pursuant to 5 U.S.C. 552(c), the CSB must confer with Department of Justice, Office of Information Policy (OIP), to obtain approval to apply the exclusion.

(2) When invoking an exclusion, the CSB must maintain an administrative record of the process of invocation and approval of the exclusion by OIP.

§ 1601.15 Special procedures for confidential commercial information.

(a) *In general.* Confidential commercial information provided to the CSB by a submitter must not be disclosed pursuant to a FOIA request except in accordance with this section.

(b) *Definitions.*

(1) *Confidential commercial information* means commercial or financial information obtained by the CSB from a submitter that may be protected from disclosure under Exemption 4 of the FOIA, 5 U.S.C. 552(b)(4).

(2) *Submitter* means any person or entity, including a corporation, State, or foreign government, Indian tribal governments but not including another Federal Government entity, that provides confidential commercial information, either directly or indirectly to the Federal Government.

(c) *Designation of confidential commercial information.* A submitter of confidential commercial information must make good faith efforts to designate by appropriate markings, at the time of submission, any portion of its submission that it considers to be protected from disclosure under Exemption 4 of the FOIA, 5 U.S.C. 552(b)(4). These designations expire ten (10) years after the date of the submission unless the submitter requests and provides justification for a longer designation period.

(d) *When notice to submitters is required.* (1) The CSB must promptly provide written notice to the submitter of confidential commercial information whenever records containing such information are requested under the FOIA if the CSB determines that it may be required to disclose the records, provided:

(i) The requested information has been designated in good faith by the submitter as information considered protected from disclosure under Exemption 4; or

(ii) The CSB has a reason to believe that the requested information may be protected from disclosure under Exemption 4, but has not yet determined whether the information is protected from disclosure.

(2) The notice must either describe the commercial information requested or include a copy of the requested records or portions of records containing the information. In cases involving a voluminous number of submitters, the CSB may post or publish a notice in a place or manner reasonably likely to inform the submitters of the proposed disclosure, instead of sending individual notifications.

(e) *Exceptions to submitter notice requirements.* The notice requirements of this section do not apply if:

(1) The CSB determines that the information is exempt under the FOIA, and therefore will not be disclosed;

(2) The information has been lawfully published or has been officially made available to the public;

(3) Disclosure of the information is required by a statute other than the FOIA or by a regulation issued in accordance with the requirements of E.O. 12600 of June 23, 1987; or

(4) The designation made by the submitter under paragraph (c) of this section appears obviously frivolous. In such case, the CSB must give the submitter written notice of any final decision to disclose the information within a reasonable number of days prior to a specified disclosure date.

(f) *Opportunity to object to disclosure.* (1) The CSB must specify a reasonable time period within which the submitter must respond to the notice referenced above.

(2) If a submitter has any objections to disclosure, it should provide the CSB a detailed written statement that specifies all grounds for withholding the particular information under any exemption of the FOIA. In order to rely on Exemption 4 as basis for nondisclosure, the submitter must explain why the information constitutes a trade secret or commercial or financial information that is privileged or confidential. Whenever possible, the business submitter's claim of confidentiality should be supported by a statement or certification by an officer or authorized representative of the business submitter. Information provided by a submitter pursuant to this paragraph may

itself be subject to disclosure under the FOIA.

(3) A submitter who fails to respond within the time period specified in the notice will be considered to have no objection to disclosure of the information. The CSB is not required to consider any information received after the date of any disclosure decision. Any information provided by a submitter under this subpart may itself be subject to disclosure under the FOIA.

(g) *Analysis of objections.* The CSB must consider a submitter's objections and specific grounds for nondisclosure in deciding whether to disclose the requested information.

(h) *Notice of intent to disclose.* Whenever the CSB decides to disclose information over the objection of a submitter, the CSB must provide the submitter written notice, which must include:

(1) A statement of the reasons why each of the submitter's disclosure objections was not sustained;

(2) A description of the information to be disclosed or copies of the records as the CSB intends to release them; and

(3) A specified disclosure date, which must be a reasonable time after the notice.

(i) *Notice of FOIA lawsuit.* Whenever a requester files a lawsuit seeking to compel the disclosure of confidential commercial information, the CSB must promptly notify the submitter.

(j) *Requester notification.* The CSB must notify the requester whenever it provides the submitter with notice and an opportunity to object to disclosure because the request includes information that may arguably be exempt from disclosure under Exemption 4 of the FOIA; whenever it notifies the submitter of its intent to disclose the requested information; and whenever a submitter files a lawsuit to prevent the disclosure of the information.

Subpart C—Appeals

§ 1601.20 Processing of appeals.

(a) *Right of appeal.* If a request has been denied in whole or in part, the requester may appeal the denial to the CSB's FOIA Appeals Officer.

(b) *Definitions.*

(1) *FOIA Appeal* means an independent review of an adverse determination initial determination made in response to a FOIA request.

(2) *FOIA Appeals Officer* means the person designated by the Chairperson to process and to decide a FOIA appeal.

(c) *Requirements for making an appeal.* (1) A requester may appeal any adverse determinations to the FOIA Appeals Officer. Examples of adverse determinations are provided in § 1601.14(e).

(2) The requester must make the appeal in writing. Requesters can submit appeals by mail or email in accordance with the following requirements herein, which are also listed on the CSB's Web site. To facilitate handling, the requester should mark both the appeal letter and envelope, or subject line of the electronic transmission, ''Freedom of Information Act Appeal'' or ''FOIA Appeal.''

(i) For hard copy requests: The envelope and the request both should addressed to: FOIA Appeals Officer—FOIA Appeal, Chemical Safety and Hazard Investigation Board, 1750 Pennsylvania Ave. NW., Suite 910, Washington, DC 20006.

(ii) For electronic requests: The appeal should addressed to the FOIA Appeals Officer and may be submitted by email to *foiaappeals@csb.gov*.

(3) To be considered timely, an appeal must be postmarked, or in the case of electronic submissions, transmitted, within ninety (90) calendar days after the date of the adverse determination that is the subject of the appeal. For purposes of apply the ninety (90) calendar day deadline, the CSB will treat an appeal that is improperly addressed as being received on the date on the date that it is actually received by the CSB, or would have been received with the exercise of due diligence, by the FOIA Appeals Officer.

(4) The appeal should clearly identify the adverse determination that is being appealed and the assigned request number.

(5) An appeal should also include a copy of the initial request, a copy of the letter denying the request in whole or in part, and a statement of the circumstances, reasons, or arguments advanced in support of disclosure of the requested record.

(d) *Adjudication of appeals.* (1) The CSB FOIA Appeals Officer or designee will act on behalf of the CSB's Chief FOIA Officer on all appeals under this section.

(2) An appeal ordinarily will not be adjudicated if the request becomes a matter of FOIA litigation.

(3) On receipt of any appeal involving classified information, the FOIA Appeals Officer must take appropriate action to ensure compliance with applicable classification rules.

(e) *Decisions on appeals.* The CSB must provide its decision on an appeal in writing. The disposition of an appeal will be in writing and will constitute the final action of the CSB on a request. A decision that upholds the CSB's determination in whole or in part will contain a statement that identifies the reasons for the affirmance, including any FOIA exemptions applied. The decision will provide the requester with notification of the statutory right to file a lawsuit and will also inform the requester of the mediation services offered by the OGIS of the National Archives and Records Administration as a non-exclusive alternative to litigation. If the CSB's decision is remanded or modified on appeal, the CSB must notify the requester of that determination in writing. The CSB must then further process the request in accordance with that appeal determination and will respond directly to the requester.

(f) *Engaging in dispute resolution services provided by OGIS.* Dispute resolution is a voluntary process. If the CSB agrees to participate in the dispute resolution services provided by OGIS, it will actively engage as a partner to the process in an attempt to resolve the dispute.

(g) *When appeal is required.* Before seeking review by a court of the CSB's adverse determination, a requester generally must first submit a timely administrative appeal.

Subpart D—Administration

§ 1601.30 Protection of records.

(a) *In general.* (1) Except as authorized by this part or as otherwise necessary in performing official duties, CSB employees must not disclose or permit disclosure of any document or information in the possession of the CSB that is confidential or otherwise of a nonpublic nature, including that regarding the CSB, the Environmental Protection Agency or the Occupational Safety and Health Administration.

(2) No person may, without permission, remove from the place where it is made available any record made available to him for inspection or copying. Stealing, altering, mutilating, obliterating, or destroying a Federal record, in whole or in part, is a violation of Federal law.

(b) [Reserved]

§ 1601.31 Preservation of records pertaining to requests under this part.

The CSB must preserve all correspondence pertaining to the requests that it receives under this subpart, as well as copies of all requested records, until disposition or destruction is authorized pursuant to title 44 of the United States Code and the General Records Schedule 4.2 of the National Archives and Records Administration. The CSB must not dispose of or destroy records while they are the subject of a pending request, appeal, or lawsuit under the FOIA.

§ 1601.32 Other rights and services.

Nothing in this subpart will be construed to entitle any person, as of right, to any service or to the disclosure of any record to which such person is not entitled under the FOIA.

Subpart E—Fees

§ 1601.40 Procedures for fees.

(a) *In general.* The CSB must charge for processing requests under the FOIA in accordance with the provisions of this section and with the OMB Guidelines. For purposes of assessing fees, the FOIA establishes three categories of requesters: Commercial use requesters, non-commercial scientific or educational institutions or news media requesters, and all other requesters. Different fees are assessed depending on the category. Requesters may seek a fee waiver. The CSB must consider requests for fee waivers in accordance with the requirements in paragraph (k) of this section. To resolve any fee

issues that arise under this section, the CSB may contact a requester for additional information. The CSB must ensure that searches, review, and duplication are conducted in the most efficient and the least expensive manner. The CSB ordinarily will collect all applicable fees before sending copies of records to a requester. Requesters must pay fees by check or money order made payable to the Treasury of the United States, or by another method as determined by the CSB.

(b) *Definitions.*

(1) *Commercial use request* is a request that asks for information for a use or a purpose that furthers a commercial, trade, or profit interest, which can include furthering those interests through litigation. The CSB's decision to place a requester in the commercial use category will be made on a case-by-case basis based on the requester's intended use of the information. The CSB must notify requesters of their placement in this category.

(2) *Direct costs* are those expenses that the CSB incurs in searching for and duplicating (and, in the case of commercial use requests, reviewing) records in order to respond to a FOIA request. For example, direct costs include the salary of the employee performing the work (*i.e.*, the basic rate of pay for the employee, plus sixteen percent (16%) of that rate to cover benefits) and the cost of operating computers and other electronic equipment, such as photocopiers and scanners. Direct costs do not include overhead expenses such as the costs of space, and of heating or lighting a facility.

(3) *Duplication* is reproducing a copy of a record, or of the information contained in it, necessary to respond to a FOIA request. Copies can take the form of paper, audiovisual materials, or electronic records, among others. The copies provided must be in a form that is reasonably usable by requesters.

(4) *Educational institution* is any school that operates a program of scholarly research. A requester in this fee category must show that the request is made in connection with the requester's role at the educational institution. The CSB may seek verification from the requester that the request is in furtherance of scholarly research and the CSB must advise requesters of their placement in this category.

(i) *Example 1.* A request from a professor of geology at a university for records relating to soil erosion, written on letterhead of the Department of Geology, would be presumed to be from an educational institution.

(ii) *Example 2.* A request from the same professor of geology seeking drug information from the Food and Drug Administration in furtherance of a murder mystery he is writing would not be presumed to be an institutional request, regardless of whether it was written on institutional stationery.

(iii) *Example 3.* A student who makes a request in furtherance of the student's coursework or other school-sponsored activities and provides a copy of a course syllabus or other reasonable documentation to indicate the research purpose for the request, would qualify as part of this fee category.

(5) *Noncommercial scientific institution* is an institution that is not operated on a ''commercial'' basis, as defined in paragraph (b)(1) of this section and that is operated solely for the purpose of conducting scientific research the results of which are not intended to promote any particular product or industry. A requester in this category must show that the request is authorized by and is made under the auspices of a qualifying institution and that the records are sought to further scientific research and are not for a commercial use. The CSB must advise requesters of their placement in this category.

(6) *Representative of the news media* is any person or entity that gathers information of potential interest to a segment of the public, uses its editorial skills to turn the raw materials into a distinct work, and distributes that work to an audience. Accordingly, the term includes any person actively gathering news for an entity that is organized and operated to publish or broadcast news to the public. The term *news* means information that is about current events or that would be of current interest to the public. Examples of news media entities include television or radio stations that broadcast news to the public at large, and publishers of periodicals that disseminate news and

make their products available through a variety of means to the general public, including news organizations that make their products available for purchase by or subscription by or free distribution to the general public, including those solely on the Internet. These examples are not all-inclusive. Moreover, as methods of news delivery evolve (for example, the adoption of the electronic dissemination of newspapers through telecommunications services), such alternative media shall be considered to be news-media entities. A request for records supporting the news-dissemination function of the requester will not be considered to be for a commercial use. *Freelance* journalists who demonstrate a solid basis for expecting publication through a news media entity will be considered as a representative of the news media. A publishing contract would provide the clearest evidence that publication is expected; however, the CSB can also consider a requester's past publication record in making this determination. The CSB will advise requesters of their placement in this category.

(7) *Review* is the examination of a record located in response to a FOIA request in order to determine whether any portion of it is exempt from disclosure under one or more of the FOIA exemptions. Review time includes processing any record for disclosure, such as doing all that is necessary to prepare the record for disclosure, including the process of redacting the record and marking the appropriate exemptions. Review costs are properly charged even if a record ultimately is not disclosed. Review time also includes time spent both obtaining and considering any formal objection to disclosure made by a confidential commercial information submitter under § 1601.15, but it does not include time spent resolving general legal or policy issues regarding the application of exemptions.

(8) *Search* is the process of looking for and retrieving records or information responsive to a request. Search time includes page-by-page or line-by-line identification of information within records and the reasonable efforts expended to locate and retrieve information from electronic records.

(c) *Charging fees.* In responding to FOIA requests, the CSB will charge the following fees unless a waiver or reduction of fees has been granted under paragraph (k) of this section. Because the fee amounts provided below already account for the direct costs associated with a given fee type, the CSB should not add any additional costs to charges calculated under this section.

(1) *Search.* (i) Requests made by educational institutions, noncommercial scientific institutions, or representatives of the news media are not subject to search fees. The CSB must charge search fees for all other requesters, subject to the restrictions of paragraph (d) of this section. The CSB may properly charge for time spent searching even if they do not locate any responsive records or if they determine that the records are entirely exempt from disclosure.

(ii) For each quarter hour spent by personnel searching for requested records, including electronic searches that do not require new programming, the fees will be charged as follows: $6.00 for clerical personnel; $11.00 for professional personnel; and $15.00 for managerial personnel.

(iii) The CSB must charge the direct costs associated with conducting any search that requires the creation of a new computer program to locate the requested records. The CSB must notify the requester of the costs associated with creating such a program, and the requester must agree to pay the associated costs before the costs may be incurred.

(iv) For requests that require the retrieval of records stored by the CSB at a Federal records center operated by the National Archives and Records Administration (NARA), the CSB must charge additional costs in accordance with the Transactional Billing Rate Schedule established by NARA.

(2) *Duplication.* The CSB will charge duplication fees to all requesters, subject to the restrictions of paragraph (d) of this section. The CSB must honor a requester's preference for receiving a record in a particular form or format where the CSB can readily reproduce it in the form or format requested. Where photocopies are supplied, the CSB must provide one copy per request at the

cost of $0.17 per page. For copies of records produced on tapes, disks, or other media, the CSB must charge the direct costs of producing the copy, including operator time. Where paper documents must be scanned in order to comply with a requester's preference to receive the records in an electronic format, the requester must also pay the direct costs associated with scanning those materials. For other forms of duplication, the CSB must charge the direct costs.

(3) *Review*. The CSB must charge review fees to requesters who make commercial use requests. Review fees will be assessed in connection with the initial review of the record, *i.e.*, the review conducted by the CSB to determine whether an exemption applies to a particular record or portion of a record. No charge will be made for review at the administrative appeal stage of exemptions applied at the initial review stage. However, if a particular exemption is deemed to no longer apply, any costs associated with the CSB's rereview of the records in order to consider the use of other exemptions may be assessed as review fees. Review fees will be charged at the same rates as those charged for a search under paragraph (c)(1)(ii) of this section.

(d) *Restrictions on charging fees*. (1) When the CSB determines that a requester is an educational institution, non-commercial scientific institution, or representative of the news media, and the records are not sought for commercial use, it will not charge search fees.

(2)(i) If the CSB fails to comply with the FOIA's time limits in which to respond to a request, it may not charge search fees, or, in the instances of requests from requesters described in paragraph (d)(1) of this section, may not charge duplication fees, except as described in paragraphs (d)(2)(ii)–(iv).

(ii) If the CSB has determined that unusual circumstances as defined by the FOIA apply and the CSB provided timely written notice to the requester in accordance with the FOIA, a failure to comply with the time limit must be excused for an additional ten (10) days.

(iii) If the CSB has determined that unusual circumstances as defined by the FOIA apply, and more than 5,000 pages are necessary to respond to the request, the CSB may charge search fees, or, in the case of requesters described in paragraph (d)(1) of this section, may charge duplication fees, if the following steps are taken. The CSB must have provided timely written notice of unusual circumstances to the requester in accordance with the FOIA and the CSB must have discussed with the requester via written mail, email, or telephone (or made not less than three good-faith attempts to do so) how the requester could effectively limit the scope of the request in accordance with 5 U.S.C. 552(a)(6)(B)(ii). If this exception is satisfied, the CSB may charge all applicable fees incurred in the processing of the request.

(iv) If a court has determined that exceptional circumstances exist as defined by the FOIA, a failure to comply with the time limits shall be excused for the length of time provided by the court order.

(3) No search or review fees will be charged for a quarter-hour period unless more than half of that period is required for search or review.

(4) Except for requesters seeking records for a commercial use, the CSB must provide without charge:

(i) The first 100 pages of duplication (or the cost equivalent for other media); and

(ii) The first two hours of search.

(5) No fee will be charged when the total fee, after deducting the 100 free pages (or its cost equivalent) and the first two hours of search, is equal to or less than $25.00.

(e) *Notice of anticipated fees in excess of $25.00*. (1) When the CSB determines or estimates that the fees to be assessed in accordance with this section will exceed $25.00, the CSB must notify the requester of the actual or estimated amount of the fees, including a breakdown of the fees for search, review or duplication, unless the requester has indicated a willingness to pay fees as high as those anticipated. If only a portion of the fee can be estimated readily, the CSB must advise the requester accordingly. If the request is for non-commercial use, the notice will specify that the requester is entitled to the statutory entitlements of 100 pages of duplication at no charge

and, if the requester is charged search fees, two hours of search time at no charge, and will advise the requester whether those entitlements have been provided.

(2) If the CSB notifies the requester that the actual or estimated fees are in excess of $25.00, the request will not be considered received and further work will not be completed until the requester commits in writing to pay the actual or estimated total fee, or designates some amount of fees the requester is willing to pay, or in the case of a non-commercial use requester who has not yet been provided with the requester's statutory entitlements, designates that the requester seeks only that which can be provided by the statutory entitlements. The requester must provide the commitment or designation in writing, and must, when applicable, designate an exact dollar amount the requester is willing to pay. The CSB is not required to accept payments in installments. Requesters must respond to their fee estimate within thirty (30) working days, or the CSB will assume that the requester is no longer interested in their FOIA request(s), and the case will be administratively closed.

(3) If the requester has indicated a willingness to pay some designated amount of fees, but the CSB estimates that the total fee will exceed that amount, the CSB will toll the processing of the request when it notifies the requester of the estimated fees in excess of the amount the requester has indicated a willingness to pay. The CSB will inquire whether the requester wishes to revise the amount of fees the requester is willing to pay or modify the request. Once the requester responds, the time to respond will resume from where it was at the date of the notification.

(4) The CSB must make available its FOIA Public Liaison or anther FOIA professional to assist any requester in reformulating a request to meet the requester's needs at a lower cost.

(f) *Charges for other services.* Although not required to provide special services, if the CSB chooses to do so as a matter of administrative discretion, the direct costs of providing the service will be charged. Examples of such services include certifying that records are true copies, providing multiple copies of the same document, or sending records by means other than first class mail.

(g) *Charging interest.* The CSB may charge interest on any unpaid bill starting on the thirty-first (31) day following the date of billing the requester. Interest charges will be assessed at the rate provided in 31 U.S.C. 3717 and will accrue from the billing date until payment is received by the CSB. The CSB must follow the provisions of the Debt Collection Act of 1982 (Pub. L. 97–365, 96 Stat. 1749), as amended, and its administrative procedures, including the use of consumer reporting agencies, collection agencies, and offset.

(h) *Aggregating requests.* When the CSB reasonably believes that a requester or a group of requesters acting in concert is attempting to divide a single request into a series of requests for the purpose of avoiding fees, the CSB may aggregate those requests and charge accordingly. The CSB may presume that multiple requests of this type made within a thirty (30) day period have been made in order to avoid fees. For requests separated by a longer period, the CSB must aggregate them only where there is a reasonable basis for determining that aggregation is warranted in view of all the circumstances involved. Multiple requests involving unrelated matters cannot be aggregated.

(i) *Advance payments.* (1) For requests other than those described in paragraphs (i)(2) or (i)(3) of this section, the CSB must not require the requester to make an advance payment before work is commenced or continued on a request. Payment owed for work already completed (*i.e.*, payment before copies are sent to a requester) is not an advance payment.

(2) When the CSB determines or estimates that a total fee to be charged under this section will exceed $250.00, it may require that the requester make an advance payment up to the amount of the entire anticipated fee before beginning to process the request. The CSB may elect to process the request prior to collecting fees when it receives

a satisfactory assurance of full payment from a requester with a history of prompt payment.

(3) Where a requester has previously failed to pay a properly charged FOIA fee to the CSB within thirty (30) calendar days of the billing date, the CSB may require that the requester pay the full amount due, plus any applicable interest on that prior request, and the CSB may require that the requester make an advance payment of the full amount of any anticipated fee before the CSB begins to process a new request or continues to process a pending request or any pending appeal. Where the CSB has a reasonable basis to believe that a requester has misrepresented the requester's identity in order to avoid paying outstanding fees, it may require that the requester provide proof of identity.

(4) In cases in which the CSB requires advance payment, the request will not be considered received and further work will not be completed until the required payment is received. If the requester does not pay the advance payment within thirty (30) calendar days after the date of the CSB's fee determination, the request will be closed.

(j) *Other statutes specifically providing for fees.* The fee schedule of this section does not apply to fees charged under any statute that specifically requires the CSB to set and collect fees for particular types of records. In instances where records responsive to a request are subject to a statutorily-based fee schedule program, the CSB must inform the requester of the contact information for that program.

(k) *Requirements for waiver or reduction of fees.* (1) Requesters may seek a waiver of fees by submitting a written application demonstrating how disclosure of the requested information is in the public interest because it is likely to contribute significantly to public understanding of the operations or activities of the government and is not primarily in the commercial interest of the requester.

(2) The CSB must furnish records responsive to a request without charge or at a reduced rate when it determines, based on all available information, that disclosure of the requested information is in the public interest because it is likely to contribute significantly to public understanding of the operations or activities of the government and is not primarily in the commercial interest of the requester. In deciding whether this standard is satisfied the CSB must consider the factors described in paragraphs (k)(2)(i) through (iii) of this section:

(i) Disclosure of the requested information would shed light on the operations or activities of the government. The subject of the request must concern identifiable operations or activities of the Federal Government with a connection that is direct and clear, not remote or attenuated.

(ii) Disclosure of the requested information is likely to contribute significantly to public understanding of those operations or activities. This factor is satisfied when the following criteria are met:

(A) Disclosure of the requested records must be meaningfully informative about government operations or activities. The disclosure of information that already is in the public domain, in either the same or a substantially identical form, would not be meaningfully informative if nothing new would be added to the public's understanding.

(B) The disclosure must contribute to the understanding of a reasonably broad audience of persons interested in the subject, as opposed to the individual understanding of the requester. A requester's expertise in the subject area as well as the requester's ability and intention to effectively convey information to the public must be considered. The CSB will presume that a representative of the news media will satisfy this consideration.

(iii) The disclosure must not be primarily in the commercial interest of the requester. To determine whether disclosure of the requested information is primarily in the commercial interest of the requester, the CSB must consider the following criteria:

(A) The CSB must identify whether the requester has any commercial interest that would be furthered by the requested disclosure. A commercial interest includes any commercial, trade, or profit interest. Requesters must be

given an opportunity to provide explanatory information regarding this consideration.

(B) If there is an identified commercial interest, the CSB must determine whether that is the primary interest furthered by the request. A waiver or reduction of fees is justified when the requirements of paragraphs (k)(2)(i) and (ii) are satisfied and any commercial interest is not the primary interest furthered by the request. The CSB ordinarily will presume that when a news media requester has satisfied the factors in paragraphs (k)(2)(i) and (ii) of this section, the request is not primarily in the commercial interest of the requester. Disclosure to data brokers or others who merely compile and market government information for direct economic return will not be presumed to primarily serve the public interest.

(3) Where only some of the records to be released satisfy the requirements for a waiver of fees, a waiver must be granted for those records.

(4) Requests for a waiver or reduction of fees should be made when the request is first submitted to the CSB and should address the criteria referenced above. A requester may submit a fee waiver request at a later time so long as the underlying record request is pending or on administrative appeal. When a requester who has committed to pay fees subsequently asks for a waiver of those fees and that waiver is denied, the requester must pay any costs incurred up to the date the fee waiver request was received.

PART 1602—PROTECTION OF PRIVACY AND ACCESS TO INDIVIDUAL RECORDS UNDER THE PRIVACY ACT OF 1974

Sec.

1602.1 General provisions.
1602.2 Requests for access to records.
1602.3 Responsibility for responding to requests for access to records.
1602.4 Responses to requests for access to records.
1602.5 Appeals from denials of requests for access to records.
1602.6 Requests for amendment or correction of records.
1602.7 Requests for accountings of record disclosures.
1602.8 Preservation of records.
1602.9 Fees.
1602.10 Notice of court-ordered and emergency disclosures.

AUTHORITY: 5 U.S.C. 552a, 553; 42 U.S.C. 7412 *et seq.*

SOURCE: 66 FR 17080, Mar. 29, 2001, unless otherwise noted.

§ 1602.1 General provisions.

(a) *Purpose and scope.* This part contains the rules that the Chemical Safety and Hazard Investigation Board (''CSB'' or ''Board'') follows under the Privacy Act of 1974, 5 U.S.C. 552a. These rules should be read together with the Privacy Act, which provides additional information about records maintained on individuals. The rules in this part apply to all records in systems of records maintained by the CSB that are retrieved by an individual's name or personal identifier. They describe the procedures by which individuals may request access to records about themselves, request amendment or correction of those records, and request an accounting of disclosures of those records by the CSB. In addition, the CSB processes all Privacy Act requests for access to records under the Freedom of Information Act (FOIA), 5 U.S.C. 552, following the rules contained in part 1601 of this chapter, which gives requests the benefit of both statutes.

(b) *Definitions.* As used in this part:

Requester means an individual who makes a request for access, a request for amendment or correction, or a request for an accounting under the Privacy Act.

Request for access to a record means a request made as described in subsection (d)(1) of the Privacy Act, 5 U.S.C. 552a.

Request for amendment or correction of a record means a request made as described in subsection (d)(2) of the Privacy Act, 5 U.S.C. 552a.

Request for an accounting means a request made as described in subsection (c)(3) of the Privacy Act, 5 U.S.C. 552a.

§ 1602.2 Requests for access to records.

(a) *How made and addressed.* You may make a request for access to a CSB record about yourself by appearing in person or by writing to the CSB. Your

request should be sent or delivered to the CSB's General Counsel, at 2175 K Street, NW., 4th Floor, Washington, DC 20037. For the quickest possible handling, you should mark both your request letter and the envelope ''Privacy Act Request.''

(b) *Description of records sought.* You must describe the records that you want in enough detail to enable CSB personnel to locate the system of records containing them with a reasonable amount of effort. Whenever possible, your request should describe the records sought, the time periods in which you believe they were compiled, and the name or identifying number of each system of records in which you believe they are kept. The CSB publishes notices in the FEDERAL REGISTER that describe its systems of records. A description of the CSB's systems of records also may be found as part of the ''Privacy Act Compilation'' published by the National Archives and Records Administration's Office of the Federal Register. This compilation is available in most large reference and university libraries. This compilation also can be accessed electronically at the Government Printing Office's World Wide Web site (which can be found at *http://www.access.gpo.gov/su___docs*).

(c) *Agreement to pay fees.* If you make a Privacy Act request for access to records, it shall be considered an agreement by you to pay all applicable fees charged under §1602.9 up to $25.00. The CSB ordinarily will confirm this agreement in an acknowledgment letter. When making a request, you may specify a willingness to pay a greater or lesser amount.

(d) *Verification of identity.* When you make a request for access to records about yourself, you must verify your identity. You must state your full name, current address, and date and place of birth. You must sign your request and your signature must either be notarized or submitted by you under 28 U.S.C. 1746, a law that permits statements to be made under penalty of perjury as a substitute for notarization. In order to help the identification and location of requested records, you may also, at your option, include your social security number.

(e) *Verification of guardianship.* When making a request as the parent or guardian of a minor or as the guardian of someone determined by a court to be incompetent, for access to records about that individual, you must establish:

(1) The identity of the individual who is the subject of the record, by stating the name, current address, date and place of birth, and, at your option, the social security number of the individual;

(2) Your own identity, as required in paragraph (d) of this section;

(3) That you are the parent or guardian of that individual, which you may prove by providing a copy of the individual's birth certificate showing your parentage or by providing a court order establishing your guardianship; and

(4) That you are acting on behalf of that individual in making the request.

§1602.3 Responsibility for responding to requests for access to records.

(a) *In general.* In determining which records are responsive to a request, the CSB ordinarily will include only those records in its possession as of the date the CSB begins its search for them. If any other date is used, the CSB will inform the requester of that date.

(b) *Authority to grant or deny requests.* The CSB's General Counsel, or his/her designee, is authorized to grant or deny any request for access to a record of the CSB.

(c) *Consultations and referrals.* When the CSB receives a request for access to a record in its possession, it will determine whether another agency of the Federal Government is better able to determine whether the record is exempt from access under the Privacy Act. If the CSB determines that it is best able to process the record in response to the request, then it will do so. If the CSB determines that it is not best able to process the record, then it will either:

(1) Respond to the request regarding that record, after consulting with the agency best able to determine whether the record is exempt from access and with any other agency that has a substantial interest in it; or

(2) Refer the responsibility for responding to the request regarding that

record to another agency that originated the record (but only if that agency is subject to the Privacy Act). Ordinarily, the agency that originated a record will be presumed to be best able to determine whether it is exempt from access.

(d) *Notice of referral.* Whenever the CSB refers all or any part of the responsibility for responding to your request to another agency, it ordinarily will notify you of the referral and inform you of the name of each agency to which the request has been referred and of the part of the request that has been referred.

(e) *Timing of responses to consultations and referrals.* All consultations and referrals shall be handled according to the date the Privacy Act access request was initially received by the CSB, not any later date.

§ 1602.4 Responses to requests for access to records.

(a) *Acknowledgments of requests.* On receipt of your request, the CSB ordinarily will send an acknowledgment letter, which shall confirm your agreement to pay fees under § 1602.2(c) and may provide an assigned request number for further reference.

(b) *Grants of requests for access.* Once the CSB makes a determination to grant your request for access in whole or in part, it will notify you in writing. The CSB will inform you in the notice of any fee charged under § 1602.9 and will disclose records to you promptly on payment of any applicable fee. If your request is made in person, the CSB may disclose records to you directly, in a manner not unreasonably disruptive of its operations, on payment of any applicable fee and with a written record made of the grant of the request. If you are accompanied by another person when you make a request in person, you shall be required to authorize in writing any discussion of the records in the presence of the other person.

(c) *Adverse determinations of requests for access.* If the CSB makes an adverse determination denying your request for access in any respect, it will notify you of that determination in writing. Adverse determinations, or denials of requests, consist of: a determination to withhold any requested record in whole or in part; a determination that a requested record does not exist or cannot be located; a determination that what has been requested is not a record subject to the Privacy Act; a determination on any disputed fee matter; and a denial of a request for expedited treatment. The notification letter shall be signed by the General Counsel, or his/her designee, and shall include:

(1) The name and title or position of the person responsible for the denial;

(2) A brief statement of the reason(s) for the denial, including any Privacy Act exemption(s) applied by the CSB in denying the request; and

(3) A statement that the denial may be appealed under § 1602.5(a) and a description of the requirements of § 1602.5(a).

§ 1602.5 Appeals from denials of requests for access to records.

(a) *Appeals.* If you are dissatisfied with the CSB's response to your request for access to records, you may appeal an adverse determination denying your request in any respect to the Privacy Act Appeals Officer of the CSB, 2175 K Street, NW., Suite 400, Washington, DC 20037. You must make your appeal in writing, and it must be received within 60 days of the date of the letter denying your request. Your appeal letter may include as much or as little related information as you wish, as long as it clearly identifies the determination (including the assigned request number, if any) that you are appealing. For the quickest possible handling, you should mark both your appeal letter and the envelope ''Privacy Act Appeal.''

(b) *Responses to appeals.* The decision on your appeal will be made in writing. A decision affirming an adverse determination in whole or in part will include a brief statement of the reason(s) for the affirmance, including any Privacy Act exemption applied, and will inform you of the Privacy Act provisions for court review of the decision. If the adverse determination is reversed or modified on appeal in whole or in part, you will be notified in a written decision and your request will be reprocessed in accordance with that appeal decision.

(c) *When appeal is required.* If you wish to seek review by a court of any adverse determination or denial of a request, you must first appeal it under this section.

§ 1602.6 Requests for amendment or correction of records.

(a) *How made and addressed.* You may make a request for amendment or correction of a CSB record about yourself by following the procedures in § 1602.2. Your request should identify each particular record in question, state the amendment or correction that you want, and state why you believe that the record is not accurate, relevant, timely, or complete. You may submit any documentation that you think would be helpful.

(b) *CSB responses.* Within ten working days of receiving your request for amendment or correction of records, the CSB will send you a written acknowledgment of its receipt of your request, and it will promptly notify you whether your request is granted or denied. If the CSB grants your request in whole or in part, it will describe the amendment or correction made and advise you of your right to obtain a copy of the corrected or amended record. If the CSB denies your request in whole or in part, it will send you a letter stating:

(1) The reason(s) for the denial; and

(2) The procedure for appeal of the denial under paragraph (c) of this section, including the name and business address of the official who will act on your appeal.

(c) *Appeals.* You may appeal a denial of a request for amendment or correction in the same manner as a denial of a request for access to records (see § 1602.5), and the same procedures will be followed. If your appeal is denied, you will be advised of your right to file a Statement of Disagreement as described in paragraph (d) of this section and of your right under the Privacy Act for court review of the decision.

(d) *Statements of Disagreement.* If your appeal under this section is denied in whole or in part, you have the right to file a Statement of Disagreement that states your reason(s) for disagreeing with the CSB's denial of your request for amendment or correction. Statements of Disagreement must be concise, must clearly identify each part of any record that is disputed, and should be no longer than one typed page for each fact disputed. Your Statement of Disagreement must be sent to the CSB, which will place it in the system of records in which the disputed record is maintained and will mark the disputed record to indicate that a Statement of Disagreement has been filed and where in the system of records it may be found.

(e) *Notification of amendment/correction or disagreement.* Within 30 working days of the amendment or correction of a record, the CSB shall notify all persons, organizations, or agencies to which it previously disclosed the record, if an accounting of that disclosure was made, that the record has been amended or corrected. If an individual has filed a Statement of Disagreement, the CSB will attach a copy of it to the disputed record whenever the record is disclosed and may also attach a concise statement of its reason(s) for denying the request to amend or correct the record.

§ 1602.7 Requests for an accounting of record disclosures.

(a) *How made and addressed.* Except where accountings of disclosures are not required to be kept (as stated in paragraph (b) of this section), you may make a request for an accounting of any disclosure that has been made by the CSB to another person, organization, or agency of any record about you. This accounting contains the date, nature, and purpose of each disclosure, as well as the name and address of the person, organization, or agency to which the disclosure was made. Your request for an accounting should identify each particular record in question and should be made by writing to the CSB, following the procedures in § 1602.2.

(b) *Where accountings are not required.* The CSB is not required to provide accountings to you where they relate to disclosures for which accountings are not required to be kept—-in other words, disclosures that are made to employees within the agency and disclosures that are made under the FOIA.

(c) *Appeals.* You may appeal a denial of a request for an accounting to the CSB Appeals Officer in the same manner as a denial of a request for access to records (see §1602.5) and the same procedures will be followed.

§ 1602.8 Preservation of records.

The CSB will preserve all correspondence pertaining to the requests that it receives under this part, as well as copies of all requested records, until disposition or destruction is authorized by Title 44 of the United States Code or the National Archives and Records Administration's General Records Schedule 14. Records will not be disposed of while they are the subject of a pending request, appeal, or lawsuit under the Privacy Act.

§ 1602.9 Fees.

The CSB will charge fees for duplication of records under the Privacy Act in the same way in which it charges duplication fees under the FOIA (see part 1601, subpart D of this chapter). No search or review fee will be charged for any record.

§ 1602.10 Notice of court-ordered and emergency disclosures.

(a) *Court-ordered disclosures.* When a record pertaining to an individual is required to be disclosed by a court order, the CSB will make reasonable efforts to provide notice of this to the individual. Notice will be given within a reasonable time after the CSB's receipt of the order—except that in a case in which the order is not a matter of public record, the notice will be given only after the order becomes public. This notice will be mailed to the individual's last known address and will contain a copy of the order and a description of the information disclosed.

(b) *Emergency disclosures.* Upon disclosing a record pertaining to an individual made under compelling circumstances affecting health or safety, the CSB will notify that individual of the disclosure. This notice will be mailed to the individual's last known address and will state the nature of the information disclosed; the person, organization, or agency to which it was disclosed; the date of disclosure; and the compelling circumstances justifying the disclosure.

PART 1603—RULES IMPLEMENTING THE GOVERNMENT IN THE SUNSHINE ACT

Sec.

1603.1 Applicability.
1603.2 Policy.
1603.3 Definitions.
1603.4 Open meetings requirement.
1603.5 Assurance of compliance.
1603.6 Business requiring a meeting.
1603.7 Grounds on which meetings may be closed or information may be withheld.
1603.8 Procedures for closing meetings, or withholding information, and requests by affected persons to close a meeting.
1603.9 Procedures for public announcement of meetings.
1603.10 Changes following public announcement.
1603.11 Transcripts, recordings, or minutes of closed meetings.
1603.12 Availability of transcripts, recordings, and minutes, and applicable fees.
1603.13 Report to Congress.
1603.14 Severability.

AUTHORITY: 5 U.S.C. 552b; 42 U.S.C. 7412(r)(6)(N).

SOURCE: 67 FR 35445, May 20, 2002, unless otherwise noted.

§ 1603.1 Applicability.

(a) This part implements the provisions of the Government in the Sunshine Act, 5 U.S.C. 552b. These procedures apply to meetings, as defined herein, of the Members of the Chemical Safety and Hazard Investigation Board (''CSB'' or ''Board'').

(b) This part does not affect the procedures by which CSB records are made available to the public, which continue to be governed by part 1601 of this chapter pursuant to the Freedom of Information Act, 5 U.S.C. 552, except that the exemptions set forth in §1603.7 shall govern in the case of any requests made for the transcripts, recordings, and minutes described in §1603.11.

§ 1603.2 Policy.

It is the policy of the CSB to provide the public with the fullest practicable information regarding the decision-making processes of the Board, while protecting the rights of individuals and the ability of the Board to discharge

its statutory functions and responsibilities. The public is invited to attend but not to participate in open meetings. For any open meeting, the Board, by majority vote, may decide to allow for a public comment period immediately following the close of that meeting.

§ 1603.3 Definitions.

As used in this part:

(a) *Days* means calendar days, except where noted otherwise.

(b) *General Counsel* means the Board's principal legal officer, or a CSB attorney serving as Acting General Counsel.

(c) *Meeting* means the deliberations of at least a quorum of Members where such deliberations determine or result in the joint conduct or disposition of official CSB business, and includes conference telephone calls or other exchanges otherwise coming within the definition. A meeting does not include:

(1) Notation voting or similar consideration of business, whether by circulation of material to the Members individually in writing or by a polling of the Members individually by telephone.

(2) Action by at least a quorum of Members to:

(i) Open or to close a meeting or to release or to withhold information pursuant to § 1603.7;

(ii) Set an agenda for a proposed meeting(s);

(iii) Call a meeting on less than seven days' notice as permitted by § 1603.9(b); or

(iv) Change the subject matter or the determination to open or to close a publicly announced meeting under § 1603.10(b).

(3) A session attended by at least a quorum of Members for the purpose of having the Board's staff or expert consultants to the Board brief or otherwise provide information to the Board concerning any matters within the purview of the Board under its authorizing statute, provided that the Board does not engage in deliberations that determine or result in the joint conduct or disposition of official CSB business on such matters.

(4) A session attended by at least a quorum of Members for the purpose of having the Environmental Protection Agency or Occupational Safety and Health Administration (including contractors of those agencies) or other persons or organizations brief or otherwise provide information to the Board concerning any matters within the purview of the Board under its authorizing statute, provided that the Board does not engage in deliberations that determine or result in the joint conduct or disposition of official CSB business on such matters.

(5) A gathering of Members for the purpose of holding informal preliminary discussions or exchange of views which do not effectively predetermine official action.

(d) *Member* means an individual duly appointed and confirmed to the collegial body known as the Board.

(e) *Reporter* means a CSB employee designated by the General Counsel, under § 1603.5(c), to attend and prepare a written summary of all briefings described in paragraphs (c)(3) and (c)(4) of this section and all informal preliminary discussions described in paragraph (c)(5) of this section.

(f) *Sunshine Act* means the Government in the Sunshine Act, 5 U.S.C. 552b.

§ 1603.4 Open meetings requirement.

Any meetings of the Board, as defined in § 1603.3, shall be conducted in accordance with this part. Except as provided in § 1603.7, the Board's meetings, or portions thereof, shall be open to public observation.

§ 1603.5 Assurance of compliance.

(a) The General Counsel or another attorney designated by the General Counsel will attend and monitor all briefings described in § 1603.3(c)(3) and (c)(4) and all informal preliminary discussions described in § 1603.3(c)(5), to assure that those gatherings do not proceed to the point of becoming deliberations and meetings for Sunshine Act purposes.

(b) The General Counsel or the designated attorney will inform the Board Members if developing discussions at a briefing or gathering should be deferred until a notice of an open or closed meeting can be published in the

FEDERAL REGISTER, and a meeting conducted pursuant to the Sunshine Act and this part.

(c) For each briefing described in § 1603.3(c)(3) or (c)(4) and each informal preliminary discussion described in § 1603.3(c)(5), the General Counsel is hereby authorized to designate a CSB employee, other than the attorney referred to in paragraph (a) of this section, to serve as a reporter. An employee may be designated as reporter for a single briefing or informal discussion or for a series of briefings or discussions. The reporter shall attend and prepare a written summary of each briefing(s) or informal discussion(s) for which he/she has been designated. The reporter must prepare the summary of a particular briefing or informal discussion within five business days after the date of that briefing or discussion. The reporter must then submit the summary to the General Counsel or the designated attorney who attended the briefing or informal discussion that is the subject of the summary for review and approval as a fair and accurate summary of that briefing or discussion. The written summaries of briefings and informal discussions shall be maintained in the Office of General Counsel.

§ 1603.6 Business requiring a meeting.

The Board may, by majority vote of its Members, determine that particular items or classes of Board business cannot be accomplished by notation voting, but must instead be decided by a recorded vote at a meeting, as defined in § 1603.3(c).

§ 1603.7 Grounds on which meetings may be closed or information may be withheld.

Except in a case where the Board finds that the public interest requires otherwise, a meeting may be closed and information pertinent to such meeting otherwise required by §§ 1603.8, 1603.9, and 1603.10 to be disclosed to the public may be withheld if the Board properly determines that such meeting or portion thereof or the disclosure of such information is likely to:

(a) Disclose matters that are:

(1) Specifically authorized under criteria established by an Executive Order to be kept secret in the interests of national defense or foreign policy; and

(2) In fact, properly classified pursuant to such Executive Order. In making the determination that this exemption applies, the Board shall rely upon the classification assigned to a document by the Environmental Protection Agency, Occupational Safety and Health Administration, or other originating agency;

(b) Relate solely to the internal personnel rules and practices of the CSB;

(c) Disclose matters specifically exempted from disclosure by statute (other than 5 U.S.C. 552), provided that such statute:

(1) Requires that the matters be withheld from the public in such a manner as to leave no discretion on the issue; or

(2) Establishes particular criteria for withholding or refers to particular types of matters to be withheld;

(d) Disclose trade secrets and commercial or financial information obtained from a person and privileged or confidential;

(e) Involve accusing any person of a crime, or formally censuring any person;

(f) Disclose information of a personal nature where disclosure would constitute a clearly unwarranted invasion of personal privacy;

(g) Disclose investigatory records compiled for law enforcement purposes, or information which if written would be contained in such records, but only to the extent that the production of such records or information would:

(1) Interfere with enforcement proceedings;

(2) Deprive a person of a right to a fair trial or an impartial adjudication;

(3) Constitute an unwarranted invasion of personal privacy;

(4) Disclose the identity of a confidential source and, in the case of a record compiled by a criminal law enforcement authority in the course of a criminal investigation or by an agency conducting a lawful national security intelligence investigation, confidential information furnished only by the confidential source;

(5) Disclose investigative techniques and procedures; or

(6) Endanger the life or physical safety of law enforcement personnel;

(h) Disclose information the premature disclosure of which would be likely to significantly frustrate implementation of a proposed action of the CSB, except that this paragraph shall not apply in any instance where the Board has already disclosed to the public the content or nature of its proposed action or is required by law to make such disclosure on its own initiative prior to taking final action on such proposal;

(i) Specifically concern the Board's issuance of a subpoena, or the CSB's participation in a civil action or proceeding, an action in a foreign court or international tribunal, or an arbitration, or the initiation, conduct, or disposition by the CSB of a particular case of formal agency adjudication pursuant to the procedures in 5 U.S.C. 554 or otherwise involving a determination on the record after opportunity for a hearing; or

(j) Disclose other information for which the Government in the Sunshine Act provides an exemption to the open meeting requirements of that Act.

§ 1603.8 Procedures for closing meetings, or withholding information, and requests by affected persons to close a meeting.

(a) A meeting shall not be closed, or information pertaining thereto withheld, unless a majority of all Members votes to take such action. A majority of the Board may act by taking a single vote with respect to any action under § 1603.7. A single vote is permitted with respect to a series of meetings, a portion or portions of which are proposed to be closed to the public, or with respect to any information concerning such series of meetings, so long as each meeting in such series involves the same particular subject matters and is scheduled to be held no more than thirty days after the initial meeting in such series. Each Member's vote under this paragraph shall be recorded and proxies are not permitted.

(b) Any person whose interest may be directly affected if a portion of a meeting is open may request the Board to close that portion on any of the grounds referred to in § 1603.7(e) through (g). Requests, with reasons in support thereof, should be submitted in writing, no later than two days before the meeting in question, to the General Counsel, Chemical Safety and Hazard Investigation Board, 2175 K Street, NW., Suite 400, Washington, DC 20037. In motion of any Member, the Board shall determine by recorded vote whether to grant the request.

(c) Within one working day of any vote taken pursuant to this section, the CSB shall make available a written copy of such vote reflecting the vote of each Member on the question and, if a portion of a meeting is to be closed to the public, a full written explanation of its action closing the meeting and a list of all persons expected to attend and their affiliation.

(d) Before every closed meeting, the General Counsel of the CSB shall publicly certify that, in his/her opinion, the meeting may be closed to the public and shall state each relevant exemption provision. If the General Counsel invokes the exemption for classified or sensitive unclassified information under § 1603.7(a), he/shall rely upon the classification or designation assigned to the document containing such information by the Environmental Protection Agency, Occupational Safety and Health Administration, or other originating agency. A copy of such certification, together with a statement setting forth the time and place of the meeting and the persons present, shall be retained by the Board as part of the transcript, recording, or minutes required by § 1603.11.

§ 1603.9 Procedures for public announcement of meetings.

(a) For each meeting, the CSB shall make public announcement, at least one week before the meeting, of:

(1) The time of the meeting;

(2) The place of the meeting;

(3) The subject matter of the meeting;

(4) Whether the meeting is to be open or closed; and

(5) The name and business telephone number of the offical designated by the CSB to respond to requests for information about the meeting.

(b) The one week advance notice required by paragraph (a) of this section may be reduced only if:

(1) A majority of all Members determines by recorded vote that CSB business requires that such meeting be scheduled in less than seven days; and

(2) The public announcement required by paragraph (a) of this section is made at the earliest practicable time.

(c) Immediately following each public announcement required by this section, or by § 1603.10, the CSB shall submit a notice of public announcement for publication in the FEDERAL REGISTER.

§ 1603.10 Changes following public announcement.

(a) The time or place of a meeting may be changed following the public announcement only if the CSB publicly announces such change at the earliest practicable time. Members need not approve such change.

(b) A meeting may be cancelled, or the subject matter of a meeting or the determination of the Board to open or to close a meeting, or a portion thereof, to the public may be changed following public announcement only if:

(1) A majority of all Members determines by recorded vote that CSB business so requires and that no earlier announcement of the cancellation or change was possible; and

(2) The CSB publicly announces such cancellation or change and the vote of each Member thereon at the earliest practicable time.

(c) The deletion of any subject matter announced for a meeting is not a change requiring the approval of the Board under paragraph (b) of this section.

§ 1603.11 Transcripts, recordings, or minutes of closed meetings.

(a) Along with the General Counsel's certification referred to in § 1603.8(d), the CSB shall maintain a complete transcript or electronic recording adequate to record fully the proceedings of each meeting, or a portion thereof, closed to the public. The CSB may maintain a set of minutes in lieu of such transcript or recording for meetings closed pursuant to § 1603.7(i). Such minutes shall fully and clearly describe all matters discussed and shall provide a full and accurate summary of any actions taken, and the reasons therefor, including a description of each of the views expressed on any item and the record of any rollcall vote. All documents considered in connection with any actions shall be identified in such minutes.

(b) The CSB shall maintain a complete verbatim copy of the transcript, a complete copy of the minutes, or a complete electronic recording of each meeting, or a portion thereof, closed to the public for at least two years after such meeting, or until one year after the conclusion of any CSB proceeding with respect to which the meeting, or a portion thereof, was held, whichever occurs later.

§ 1603.12 Availability of transcripts, recordings, and minutes, and applicable fees.

The CSB shall make promptly available to the public the transcript, electronic recording, or minutes of the discussion of any item on the agenda or of any testimony received at a meeting, except for such item, or items, of discussion or testimony as determined by the CSB to contain matters which may be withheld under the exemptive provisions of § 1603.7. Copies of the nonexempt portions of the transcript or minutes, or transcription of such recordings disclosing the identity of each speaker, shall be furnished to any person at the actual cost of transcription or duplication. Requests for transcripts, recordings, or minutes shall be made in writing to the General Counsel of the CSB, 2175 K Street, NW., Suite 400, Washington, DC 20037.

§ 1603.13 Report to Congress.

The CSB General Counsel shall annually report to the Congress regarding the Board's compliance with the Government in the Sunshine Act, including a tabulation of the total number of open meetings, the total number of closed meetings, the reasons for closing such meetings and a description of any litigation brought against the Board pursuant to the Government in the

Sunshine Act, including any cost assessed against the Board in such litigation (whether or not paid by the Board).

§ 1603.14 Severability.

If any provision of this part or the application of such provision to any person or circumstances, is held invalid, the remainder of this part or the application of such provision to persons or circumstances other than those as to which it is held invalid, shall not be affected thereby.

PART 1604—REPORTING OF ACCIDENTAL RELEASES

Sec.

1604.1 Purpose.
1604.2 Definitions.
1604.3 Reporting an accidental release.
1604.4 Information required in an accidental release report.
1604.5 Failure to report an accidental release.
1604.6 Public availability of accidental release records.

AUTHORITY: 42 U.S.C. 7412(r)(6)(C)(iii); 42 U.S.C. 7412(r)(6)(N).

SOURCE: 85 FR 10094, Feb. 21, 2020, unless otherwise noted.

§ 1604.1 Purpose.

The enabling legislation of the Chemical Safety and Hazard Investigation Board (CSB) provides that the CSB shall establish by regulation requirements binding on persons for reporting accidental releases into the ambient air subject to the Board's investigative jurisdiction. 42 U.S.C. 7412(r)(6)(C)(iii). This part establishes the rule required by the enabling legislation. The purpose of this part is to require prompt notification of any accidental release within the CSB's investigatory jurisdiction.

§ 1604.2 Definitions.

As used in this part, the following definitions apply:

Accidental release means an unanticipated emission of a regulated substance or other extremely hazardous substance into the ambient air from a stationary source.

Ambient air means any portion of the atmosphere inside or outside a stationary source.

Extremely hazardous substance means any substance which may cause death, serious injury, or substantial property damage, including but not limited to, any ''regulated substance'' at or below any threshold quantity set by the Environmental Protection Agency (EPA) Administrator under 42 U.S.C. 7412(r)(5).

General public means any person except for:

(1) Workers, employees, or contractors working for (or on behalf of) the owner or operator of a stationary source from which an accidental release has occurred; and

(2) Any person acting in the capacity of an emergency responder to an accidental release from a stationary source.

Inpatient hospitalization means a formal admission to the inpatient service of a hospital or clinic for care.

Owner or operator means any person or entity who owns, leases, operates, controls, or supervises a stationary source.

Property damage means damage to or the destruction of tangible public or private property, including loss of use of that property.

Regulated substance means any substance listed pursuant to the authority of 42 U.S.C. 7412(r)(3).

Serious injury means any injury or illness that results in death or inpatient hospitalization.

Stationary source means any buildings, structures, equipment, installations, or substance-emitting stationary activities which belong to the same industrial group, which are located on one or more contiguous properties, which are under the control of the same person (or persons under common control), and from which an accidental release may occur.

Substantial property damage means estimated property damage at or outside the stationary source equal to or greater than $1,000,000.

§ 1604.3 Reporting an accidental release.

(a) The owner or operator of a stationary source must report in accordance with paragraph (b) or (c) of this section, any accidental release resulting in a fatality, serious injury, or substantial property damage.

(b) If the owner or operator has submitted a report to the National Response Center (NRC) pursuant to 40 CFR 302.6, the CSB reporting requirement may be satisfied by submitting the NRC identification number to the CSB within 30 minutes of submitting a report to the NRC.

(c) If the owner or operator has not submitted a report to the NRC and notified the CSB under paragraph (b) of this section, the owner/operator must submit a report directly to the CSB within eight hours of the accidental release and must include the required information listed in § 1604.4. A report may be made by email to: *report@csb.gov*, or by telephone at 202–261–7600.

(d) For the purpose of efficiency, multiple owner/operators may agree in advance or at the time of release to a single, consolidated report on behalf of one or more parties who are responsible for reporting an accidental release from a stationary source. However, any consolidated report must include all pertinent information required under § 1604.4.

(e) Notwithstanding paragraphs (a) through (d) of this section, an owner or operator of a stationary source, without penalty, may revise and/or update information reported to the NRC or CSB by sending a notification with revisions by email to: *report@csb.gov*, or by correspondence to: Chemical Safety Board (CSB) 1750 Pennsylvania Ave. NW, Suite 910, Washington, DC 20006, within 30 days following the submission of a report to the NRC or CSB. If applicable, the notification must reference the original NRC identification number. No update or revisions should be sent to the NRC. In addition to the opportunity to revise and/or update information within 30 days, an owner or operator may also submit a revised report to the Board within 60 additional days if the submitter explains why the revised report could not have been submitted within the first 30 days.

§ 1604.4 Information required in an accidental release report.

The report required under § 1604.3(c) must include the following information regarding an accidental release as applicable:

(a) The name of, and contact information for, the owner/operator;

(b) The name of, and contact information for, the person making the report;

(c) The location information and facility identifier;

(d) The approximate time of the accidental release;

(e) A brief description of the accidental release;

(f) An indication whether one or more of the following has occurred:

(1) Fire;

(2) Explosion;

(3) Death;

(4) Serious injury; or

(5) Property damage;

(g) The name of the material(s) involved in the accidental release, the Chemical Abstract Service (CAS) number(s), or other appropriate identifiers;

(h) If known, the amount of the release;

(i) If known, the number of fatalities;

(j) If known, the number of serious injuries;

(k) Estimated property damage at or outside the stationary source; and

(l) Whether the accidental release has resulted in an evacuation order impacting members of the general public and others, and, if known:

(1) The number of persons evacuated;

(2) Approximate radius of the evacuation zone; and

(3) The type of person subject to the evacuation order (*i.e.*, employees, members of the general public, or both).

§ 1604.5 Failure to report an accidental release.

(a) It is unlawful for any person to fail to make reports required under this part, and suspected violations of this part will be forwarded to the Administrator of the EPA for appropriate enforcement action.

(b) Violation of this part is subject to enforcement pursuant to the authorities of 42 U.S.C. 7413 and 42 U.S.C. 7414, which may include—

(1) Administrative penalties;

(2) Civil action; or

(3) Criminal action.

§ 1604.6 Public availability of accidental release records.

Accidental release records collected by the CSB under this part may be obtained by making a request in accordance with 40 CFR part 1601, the CSB's procedures for the disclosure of records under the Freedom of Information Act. The CSB will process requests, and if appropriate, disclose such records, in accordance with 40 CFR part 1601 and relevant Federal information disclosure laws.

PART 1610—ADMINISTRATIVE INVESTIGATIONS

Sec.
1610.1 Representation of witnesses in investigations.
1610.2 Repeated attorney misconduct, sanctions, hearings.
1610.3 Sequestration of witnesses and exclusion of Counsel.
1610.4 Deposition Transcripts.

AUTHORITY: 42 U.S.C. 7412(r)(6)(C)(i), 7412(r)(6)(L), 7412(r)(6)(N).

Section 1610.4 also issued under 5 U.S.C. 555.

SOURCE: 66 FR 1050, Jan. 5, 2001, unless otherwise noted.

§ 1610.1 Representation of witnesses in investigations.

(a) *Witnesses who are compelled to appear*. Witnesses who are compelled to appear for a deposition (i.e., by subpoena) are entitled to be accompanied, represented, and advised by an attorney as follows:

(1) Counsel for a witness may advise the witness with respect to any question asked where it is claimed that the testimony or other evidence sought from a witness is outside the scope of the investigation, or that the witness is privileged to refuse to answer a question or to produce other evidence. For these allowable objections, the witness or counsel for the witness may object on the record to the question or requirement and may state briefly and precisely the ground therefor. If the witness refuses to answer a question, then counsel may briefly state on the record that counsel has advised the witness not to answer the question and the legal grounds for such refusal. The witness and his or her counsel shall not otherwise object to or refuse to answer any question, and they shall not otherwise interrupt the oral examination.

(2) Any objections made will be treated as continuing objections and preserved throughout the further course of the deposition without the necessity for repeating them as to any similar line of inquiry. Cumulative objections are unnecessary. Repetition of the grounds for any objection will not be allowed.

(3) Counsel for a witness may not, for any purpose or to any extent not allowed by paragraphs (a)(1) and (2) of this section, interrupt the examination of the witness by making any objections or statements on the record.

(4) Following completion of the examination of a witness, counsel for the witness may on the record request the person conducting the deposition to permit the witness to clarify any of his or her answers. The grant or denial of such request shall be within the sole discretion of the person conducting the deposition.

(5) The person conducting the deposition shall take all necessary action to regulate the course of the deposition, to avoid delay, and to prevent or restrain disorderly, dilatory, obstructionist, or contumacious conduct, or contemptuous language. Such person shall, for reasons stated on the record, immediately report to the Board any instances where an attorney has allegedly refused to comply with his or her directions, or has allegedly engaged in disorderly, dilatory, obstructionist, or contumacious conduct, or contemptuous language in the course of the deposition. The Board may thereupon take such further action, if any, as the circumstances warrant, including exclusion of that attorney from further participation in the particular investigation.

(b) *Voluntary interviews*. Witnesses appearing voluntarily do not have a right to have an attorney present during questioning. The Investigator-in-

Charge (IIC), in consultation with the General Counsel, may permit a witness to be accompanied by an attorney or non-attorney representative. If so accompanied, the role of the attorney or non-attorney representative is limited to raising objections to questions that are outside the scope of the investigation and to advising the witness with respect to any legal privilege such as, for example, under the Fifth Amendment to the U. S. Constitution. Attorney and non-attorney representatives may not represent more than one witness in each investigation in this fashion, absent the consent of the IIC and the General Counsel.

§ 1610.2 Repeated attorney misconduct, sanctions, hearings.

(a) If an attorney who has been sanctioned by the Board for disorderly, dilatory, obstructionist, or contumacious conduct, or contemptuous language in the course of a deposition under § 1610.1(a)(5) is sanctioned again by the Board in a subsequent deposition or investigation, the Board, after offering the attorney an opportunity to be heard, may reprimand, censure the attorney, or suspend the attorney from further practice before the Board for such period of time as the Board deems advisable.

(b) A reprimand or a censure shall be ordered with grounds stated on the record of the proceeding. A suspension shall be in writing, shall state the grounds on which it is based, and shall advise the person suspended of the right to appeal.

(c) An attorney suspended pursuant to this section may within ten (10) days after issuance of the order file an appeal with the Board. The appeal shall be in writing and state concisely, with supporting argument, why the appellant believes the order was erroneous, either as a matter of fact or law. If necessary for a full and fair consideration of the facts, the Board as a whole may conduct further evidentiary hearings, or may refer the matter to another presiding officer for development of a record. Such presiding officer may be an attorney who is a Member of the Board or is employed in the Office of General Counsel, or an administrative law judge detailed from another agency pursuant to 5 U.S.C. 3344. If the Board refers the matter to a presiding officer, unless the Board provides specific directions to the presiding officer, that officer shall determine the procedure to be followed and who shall present evidence, subject to applicable provisions of law. Such hearing shall commence as soon as possible. If no appeal is taken of a suspension, or, if the suspension is upheld at the conclusion of the appeal, the presiding officer, or the Board, as appropriate, shall notify the state bar(s) to which the attorney is admitted. Such notification shall include copies of the order of suspension, and, if an appeal was taken, briefs of the parties, and the decision of the Board.

[66 FR 17363, Mar. 30, 2001]

§ 1610.3 Sequestration of witnesses and exclusion of Counsel.

(a) All witnesses compelled by subpoena to submit to CSB depositions shall be sequestered unless the official conducting the depositions permits otherwise.

(b) Any witness compelled by subpoena to appear at a deposition during a CSB investigation may be accompanied, represented, and advised by an attorney in good standing of his or her choice, pursuant to § 1610.1. However, when the CSB official conducting the investigation determines, after consultation with the Office of General Counsel, that the CSB has concrete evidence that the presence of an attorney representing multiple interests would obstruct and impede the investigation or inspection, the CSB official may prohibit that counsel from being present during the deposition.

(c) The deposing official is to provide a witness whose counsel has been excluded under paragraph (b) of this section, and the witness' counsel, a written statement of the reasons supporting the decision to exclude. This statement, which must be provided no later than five working days after exclusion, must explain the basis for the counsel's exclusion. This statement must also advise the witness of the witness' right to appeal the exclusion decision and obtain an automatic stay of the effectiveness of the subpoena by filing a motion to quash the subpoena

with the Board within five days of receipt of this written statement.

(d) Within five days after receipt of the written notification required in paragraph (c) of this section, a witness whose counsel has been excluded may appeal the exclusion decision by filing a motion to quash the subpoena with the Board. The filing of the motion to quash will stay the effectiveness of the subpoena pending the Board's decision on the motion.

(e) If a witness' counsel is excluded under paragraph (b) of this section, the deposition may, at the witness' request, either proceed without counsel or be delayed for a reasonable period of time to permit the retention of new counsel. The deposition may also be rescheduled to a subsequent date established by the CSB, although the deposition shall not be rescheduled by the CSB to a date that precedes the expiration of the time provided in paragraph (d) of this section for appeal of the exclusion of counsel, unless the witness consents to an earlier date.

[66 FR 17363, Mar. 30, 2001]

§ 1610.4 Deposition Transcripts.

(a) Transcripts of depositions of witnesses compelled by subpoena to appear during a Board investigation, shall be recorded solely by an official reporter designated by the person conducting the deposition.

(b) Such a witness, after completing the compelled testimony, may file a petition with the Board's General Counsel to procure a copy of the official transcript of such testimony. The General Counsel shall rule on the petition, and may deny it for good cause. Whether or not such a petition is filed, the witness (and his or her attorney), upon proper identification, shall have the right to inspect the official transcript of the witness' own testimony. If such a petition is denied by the General Counsel, he shall inform the petitioner of the right to inspect the transcript.

(c) Good cause for denying a witness' petition to procure a transcript of his or her testimony may include, but shall not be limited to, the protection of: trade secrets and confidential business information contained in the testimony, security-sensitive operational and vulnerability information, and the integrity of Board investigations.

[68 FR 4393, Jan. 29, 2003]

PART 1611—TESTIMONY BY EMPLOYEES IN LEGAL PROCEEDINGS

Sec.

1611.1 General.
1611.2 Definitions.
1611.3 Scope of permissible testimony.
1611.4 Manner in which testimony is given in civil litigation.
1611.5 Request for testimony in civil litigation.
1611.6 Testimony of former CSB employees.
1611.7 Testimony by current CSB employees regarding prior activity.
1611.8 Procedure in the event of a subpoena in civil litigation.
1611.9 Testimony in Federal, State, or local criminal investigations and other proceedings.
1611.10 Obtaining CSB investigation reports and supporting information.

AUTHORITY: 5 U.S.C. 301, 42 U.S.C. 7412(r)(6)(G).

SOURCE: 66 FR 17366, Mar. 30, 2001, unless otherwise noted.

§ 1611.1 General.

(a) This part prescribes policies and procedures regarding the testimony of employees of the Chemical Safety and Hazard Investigation Board (CSB) in suits or actions for damages and criminal proceedings arising out of chemical incidents when such testimony is in an official capacity and arises out of or is related to an incident investigation. The purpose of this part is to ensure that the time of CSB employees is used only for official purposes, to avoid embroiling the CSB in controversial issues that are not related to its duties, to avoid spending public funds for non-CSB purposes, to preserve the impartiality of the CSB, and to prohibit the discovery of opinion testimony.

(b) This part does not apply to:

(1) Congressional requests or subpoenas for testimony or records;

(2) Federal court civil proceedings in which the United States is a party;

(3) Federal administrative proceedings;

(4) Employees who voluntarily testify, while on their own time or in approved leave status, as private citizens

as to facts or events that are not related to the official business of the CSB. The employee must state for the record that the testimony represents the employee's own views and is not necessarily the official position of the CSB.

(c) This part only provides guidance for the internal operations of the CSB, and neither creates nor is intended to create any enforceable right or benefit against the United States.

§ 1611.2 Definitions.

CSB incident report means the report containing the CSB's determinations, including the probable cause of an incident, issued either as a narrative report or in a computer format. Pursuant to 42 U.S.C. 7412(r)(6)(G), no part of the conclusions, findings or recommendations of the CSB relating to an accidental release or the investigation thereof, may be admitted as evidence or used in any suit or action for damages growing out of any matter mentioned in such report.

Employee, for the purpose of this part and part 1612 of this chapter, refers to current or former CSB Board Members or employees, including student interns, and contractors, contract employees, or consultants (and their employees). This definition does not include persons who are no longer employed by or under contract to the CSB, and who are retained or hired as expert witnesses or agree to testify about matters that do not involve their work for the CSB.

[66 FR 17366, Mar. 30, 2001, as amended at 66 FR 23854, May 10, 2001]

§ 1611.3 Scope of permissible testimony.

(a) The statute creating the CSB, 42 U.S.C. 7412(r)(6)(G), precludes the use or admission into evidence of CSB investigative reports in any suit or action for damages arising from such incidents. This provision would be undermined if expert opinion testimony of CSB employees, which may be reflected in the views of the CSB expressed in its reports, were admitted in evidence or used in litigation arising out of an incident. The CSB relies heavily upon its investigators' opinions in its deliberations. Furthermore, the use of CSB employees as experts to give opinion testimony would impose a significant administrative burden on the CSB's investigative staff.

(b) For the reasons stated in paragraph (a) of this section and § 1611.1, CSB employees may only testify as to the factual information they obtained during the course of an investigation. However, they shall decline to testify regarding matters beyond the scope of their investigation, and they shall not give any expert or opinion testimony.

(c) CSB employees may testify about the firsthand information they obtained during an investigation that is not reasonably available elsewhere, including their own factual observations. Consistent with the principles cited in § 1611.1 and this section, current CSB employees are not authorized to testify regarding other employee's observations or reports, or other types of CSB documents, including but not limited to safety recommendations, safety studies, safety proposals, safety accomplishments, reports labeled studies, and analysis reports, as they contain staff analysis and/or CSB conclusions.

(d) Consistent with 42 U.S.C. 7412(r)(6)(G), a CSB employee may not use the CSB's investigation report for any purpose during his testimony.

(e) No employee may testify in any matter absent advance approval by the General Counsel as provided in this part.

§ 1611.4 Manner in which testimony is given in civil litigation.

(a) Testimony of CSB employees with unique, firsthand information may be made available for use in civil actions or civil suits for damages arising out of incidents through depositions or written interrogatories. CSB employees are not permitted to appear and testify in court in such actions.

(b) Normally, depositions will be taken and interrogatories answered at the CSB's headquarters in Washington, DC, and at a time arranged with the employee reasonably fixed to avoid substantial interference with the performance of his or her duties.

(c) CSB employees are authorized to testify only once in connection with any investigation they have made of an incident. Consequently, when more

than one civil lawsuit arises as a result of an incident, it shall be the duty of counsel seeking the employee's deposition to ascertain the identity of all parties to the multiple lawsuits and their counsel, and to advise them of the fact that a deposition has been granted, so that all interested parties may be afforded the opportunity to participate therein.

(d) Upon completion of the deposition of a CSB employee, the original of the transcript will be provided to the deponent for signature and correction, which the CSB does not waive. A copy of the transcript of the testimony and any videotape shall be furnished, at the expense of the party requesting the deposition, to the CSB's General Counsel at Washington, DC headquarters for the CSB's files.

(e) If CSB employees are required to travel to testify, under the relevant substantive and procedural laws and regulations the party requesting the testimony must pay for the costs, including travel expenses. Costs must be paid by check or money order payable to the Chemical Safety and Hazard Investigation Board.

§ 1611.5 Request for testimony in civil litigation.

(a) A written request for testimony by deposition or interrogatories of a CSB employee relating to an incident shall be addressed to the General Counsel, who may approve or deny the request consistent with this part. Such request shall set forth the title of the civil case, the court, the date and place of the incident, the reasons for desiring the testimony, and a showing that the information desired is not reasonably available from other sources.

(b) Where testimony is sought in connection with civil litigation, the General Counsel shall not approve it until the CSB's investigation report is issued.

(c) The General Counsel shall attach to the approval of any deposition such reasonable conditions as may be deemed appropriate in order that the testimony will be consistent with § 1611.1, will be limited to the matters delineated in § 1611.3, will not interfere with the performance of the duties of the employee as set forth in § 1611.4, and will otherwise conform to the policies of this part.

(d) A subpoena shall not be served upon a CSB employee in connection with the taking of a deposition in civil litigation.

§ 1611.6 Testimony of former CSB employees.

(a) It is not necessary to request CSB approval for testimony of a former CSB employee, nor is such testimony limited to depositions. However, the scope of permissible testimony continues to be constrained by all the limitations set forth in § 1611.3 and § 1611.4.

(b) Any former employee who is served with a subpoena to appear and testify in connection with civil litigation that relates to his or her work with the CSB, shall immediately notify the CSB General Counsel and provide all information requested by the General Counsel.

[66 FR 17366, Mar. 30, 2001, as amended at 66 FR 23854, May 10, 2001]

§ 1611.7 Testimony by current CSB employees regarding prior activity.

Any testimony regarding any incident within the CSB's jurisdiction, or any expert testimony arising from employment prior to CSB service is prohibited absent approval by the General Counsel. Approval shall only be given if testimony will not violate § 1611.1 and § 1611.3, and is subject to whatever conditions the General Counsel finds necessary to promote the purposes of this part as set forth in § 1611.1 and § 1611.3.

§ 1611.8 Procedure in the event of a subpoena in civil litigation.

(a) If the CSB employee has received a subpoena to appear and testify in connection with civil litigation, a request for his deposition shall not be approved until the subpoena has been withdrawn.

(b) Upon receipt of a subpoena, the employee shall immediately notify the General Counsel and provide all information requested by the General Counsel.

(c) The General Counsel shall determine the course of action to be taken and will so advise the employee.

§ 1611.9 Testimony in Federal, State, or local criminal investigations and other proceedings.

(a) As with civil litigation, the CSB prefers that testimony be taken by deposition if court rules permit, and that testimony await the issuance of the investigation report. The CSB recognizes, however, that in the case of coroner's inquests and grand jury proceedings this may not be possible. The CSB encourages those seeking testimony of CSB employees to contact the General Counsel as soon as such testimony is being considered. Whenever the intent to seek such testimony is communicated to the employee, he shall immediately notify the General Counsel.

(b) In any case, CSB employees are prohibited from testifying in any civil, criminal, or other matter, either in person or by deposition or interrogatories, absent advance approval of the General Counsel.

(c) If permission to testify by deposition or in person is granted, testimony shall be limited as set forth in § 1611.3. Only factual testimony is authorized; no expert or opinion testimony shall be given.

§ 1611.10 Obtaining CSB investigation reports and supporting information.

It is the responsibility of the individual requesting testimony to obtain desired documents. There are a number of ways to obtain CSB investigation reports, and accompanying investigation docket files. The rules at part 1612 of this chapter explain CSB procedures for production of records in legal proceedings, and the CSB's Freedom of Information Act rules at part 1601 of this chapter explain CSB procedures for producing documents more generally. See also the information available on the CSB web site, at *www.csb.gov*. You may also call the CSB Office of General Counsel, at (202) 261–7600. Documents will not be supplied by witnesses at depositions, nor will copying services be provided by deponents.

PART 1612—PRODUCTION OF RECORDS IN LEGAL PROCEEDINGS

Sec.
1612.1 Purpose and scope.
1612.2 Applicability.
1612.3 Published reports and material contained in the public incident investigation dockets.
1612.4 Requests for authentication or certification of records.
1612.5 Other material.

AUTHORITY: 5 U.S.C. 301, 42 U.S.C. 7412(r)(6)(G).

SOURCE: 66 FR 17366, Mar. 30, 2001, unless otherwise noted.

§ 1612.1 Purpose and scope.

(a) This part sets forth procedures to be followed when requesting material for use in legal proceedings (including administrative proceedings) in which the Chemical Safety and Hazard Investigation Board (CSB) is not a party, and procedures to be followed by the employee upon receipt of a subpoena, order, or other demand (collectively referred to here as a demand) for such material by a court or other competent authority or by a private litigant. *Material*, as used in this part, means any type of physical or documentary evidence, including but not limited to paper documents, electronic media, videotapes, audiotapes, etc.

(b) The purposes of this part are to:

(1) Conserve the time of employees for conducting official business;

(2) Minimize the possibility of involving the CSB in controversial issues not related to its mission;

(3) Maintain the impartiality of the CSB among private litigants;

(4) Avoid spending the time and money of the United States for private purposes; and

(5) To protect confidential, sensitive information, and the deliberative processes of the CSB.

§ 1612.2 Applicability.

This part applies to requests to produce material concerning information acquired in the course of performing official duties or because of the employee's official status. Specifically, this part applies to requests for: material contained in CSB files; and any information or material acquired

by an employee of the CSB in the performance of official duties or as a result of the employee's status. Two sets of procedures are here established, dependent on the type of material sought. Rules governing requests for employee testimony, as opposed to material production, can be found at part 1611 of this chapter. Document production shall not accompany employee testimony, absent compliance with this part and General Counsel approval.

§ 1612.3 Published reports and material contained in the public incident investigation dockets.

(a) Demands for published investigation reports should be directed to the Office of Congressional and Public Affairs, U.S. Chemical Safety and Hazard Investigation Board, 2175 K Street, NW, Suite 400, Washington, DC 20037. Demands for material contained in the CSB's official public docket files of its incident investigations shall be submitted, in writing, to CSB Records Officer, U.S. Chemical Safety and Hazard Investigation Board, 2175 K Street, NW, Suite 400, Washington, DC 20037. For information regarding the types of documents routinely issued by the CSB, see part 1601 of this chapter.

(b) No subpoena shall be issued to obtain materials subject to this section, and any subpoena issued shall be required to be withdrawn prior to release of the requested information. Payment of reproduction fees may be required in advance.

§ 1612.4 Requests for authentication or certification of records.

The CSB may authenticate or certify records to facilitate their use as evidence. Requests for certified copies should be made to the General Counsel at least 30 days before the date they will be needed. The CSB may charge a certification fee of $5.00 per document.

§ 1612.5 Other material.

(a) *Production prohibited unless approved.* Except in the case of the material referenced in § 1612.3, no employee or former employee of the CSB shall, in response to a demand of a private litigant, court, or other authority, produce any material contained in the files of the CSB (whether or not agency records under 5 U.S.C. 552) or produce any material acquired as part of the performance of the person's official duties or because of the person's official status, without the prior written approval of the General Counsel.

(b) *Procedures to be followed for the production of material under this section.* (1) All demands for material shall be submitted to the General Counsel at CSB headquarters, 2175 K Street, NW., Suite 400, Washington, DC 20037. If an employee receives a demand, he shall forward it immediately to the General Counsel.

(2) Each demand must contain an affidavit by the party seeking the material or his attorney setting forth the material sought and its relevance to the proceeding, and containing a certification, with support, that the information is not available from other sources, including CSB materials described in § 1612.3 and part 1601 of this chapter.

(3) In the absence of General Counsel approval of a demand, the employee is not authorized to comply with the demand.

(4) The General Counsel shall advise the requester of approval or denial of the demand, and may attach whatever conditions to approval considered appropriate or necessary to promote the purposes of this part. The General Counsel may also permit exceptions to any requirement in this part when necessary to prevent a miscarriage of justice, or when the exception is in the best interests of the CSB and/or the United States.

PARTS 1613–1619 [RESERVED]

PART 1620—ADMINISTRATIVE CLAIMS ARISING UNDER THE FEDERAL TORT CLAIMS ACT

Sec.

1620.1 Purpose and scope of regulations.
1620.2 Administrative claim; when presented.
1620.3 Administrative claim; who may file.
1620.4 Investigations.
1620.5 Administrative claim; evidence and information to be submitted.
1620.6 Authority to adjust, determine, compromise, and settle.
1620.7 Limitations on authority.
1620.8 Referral to Department of Justice.

1620.9 Final denial of claim.
1620.10 Action on approved claim.

AUTHORITY: 28 U.S.C. 2672; 42 U.S.C. 7412(r)(6)(N); 28 CFR 14.11.

SOURCE: 69 FR 55513, Sept. 15, 2004, unless otherwise noted.

§ 1620.1 Purpose and scope of regulations.

The regulations in this part apply only to administrative claims presented or filed with the Chemical Safety and Hazard Investigation Board (CSB), under the Federal Tort Claims Act (FTCA), 28 U.S.C. 1346(b), 2401(b), 2671–2680, as amended, for money damages against the United States for damage to or loss of property, personal injury, death, or other damages caused by the negligent or wrongful act or omission of an officer or employee of CSB while acting within the scope of his or her office or employment, but only under circumstances where the United States, if a private person, would be liable to the claimant in accordance with the law of the place where the act or omission occurred.

§ 1620.2 Administrative claim; when presented.

(a) For purposes of the provisions of 28 U.S.C. 2401(b), 2672, and 2675, a claim is deemed to have been presented when the CSB receives from a claimant, and/or his or her authorized agent, attorney, or other legal representative, an executed Standard Form 95 (Claim for Damage, Injury or Death), or other written notification of an incident, accompanied by a claim for money damages stating a sum certain (a specific dollar amount) for specified damage to or loss of property, personal injury, death, or other compensable damages alleged to have occurred as a result of the incident. A claimant must present a claim within 2 years of the date of accrual of the claim. The date of accrual generally is determined to be the time of death, injury, or other alleged damages, or if the alleged damages are not immediately apparent, when the claimant discovered (or reasonably should have discovered) the alleged damages and its cause, though the actual date of accrual will always depend on the facts of each case. Claimants should be advised that mailing a claim by the 2-year time limit is not sufficient if the CSB does not receive the claim through the mail by that date. Additionally, claimants should be advised that a claim is not considered presented by the CSB until the CSB receives all information requested in this paragraph. Incomplete claims will be returned to the claimant.

(b) All claims filed under the FTCA as a result of the alleged negligence or wrongful act or omission of the CSB or its employees must be mailed or delivered to the Office of the General Counsel, 2175 K Street NW., Suite 650, Washington, DC 20037.

(c) The FTCA requires that a claim must be presented to the Federal agency whose activities gave rise to the claim. A claim that should have been presented to CSB, but was mistakenly addressed to or filed with another Federal agency, is presented to the CSB, as required by 28 U.S.C. 2401(b), as of the date the claim is received by the CSB. When a claim is mistakenly presented to the CSB, the CSB will transfer the claim to the appropriate Federal agency, if ascertainable, and advise the claimant of the transfer, or return the claim to the claimant if the appropriate Federal agency cannot be determined.

(d) A claimant whose claim arises from an incident involving the CSB and one or more other Federal agencies will identify each agency to which the claim has been submitted at the time the claim is presented to the CSB. The CSB will contact all other affected Federal agencies in order to designate a single agency that will investigate and decide the merits of the claim. In the event a designation cannot be agreed upon by the affected agencies, the Department of Justice will be consulted and that agency will designate a specific agency to investigate and determine the merits of the claim. The designated agency will then notify the claimant that all future correspondence concerning the claim must be directed to the designated Federal agency. All involved Federal agencies may agree to conduct their own administrative reviews and to coordinate the results, or to have the investigation conducted solely by the designated Federal

agency. However, in any event, the designated agency will be responsible for the final determination of the claim.

(e) A claim presented in compliance with paragraph (a) of this section may be amended by the claimant at any time prior to final agency action or prior to the exercise of the claimant's option under 28 U.S.C. 2675(a). Amendments must be in writing and signed by the claimant or his or her authorized agent, attorney, or other legal representative. Upon the timely filing of an amendment to a pending claim, the CSB will have an additional 6 months in which to investigate the claim and to make a final disposition of the claim as amended. A claimant's option under 28 U.S.C. 2675(a) will not accrue until 6 months after the filing of an amendment.

§ 1620.3 Administrative claim; who may file.

(a) A claim for damage to or loss of property may be presented by the owner of the property, or his or her authorized agent, attorney, or other legal representative.

(b) A claim for personal injury may be presented by the injured person, or his or her authorized agent, attorney or other legal representative.

(c) A claim based on death may be presented by the executor or administrator of the decedent's estate, or by any other person legally entitled to assert a claim under the applicable State law, provided that the basis for the representation is documented in writing.

(d) A claim for loss totally compensated by an insurer with the rights to subrogate may be presented by the insurer. A claim for loss partially compensated by an insurer with the rights to subrogate may be presented by the insurer or the insured individually as their respective interests appear, or jointly. When an insurer presents a claim asserting the rights to subrogate the insurer must present appropriate evidence that it has the rights to subrogate.

(e) A claim presented by an agent or legal representative must be presented in the name of the claimant, be signed by the agent, attorney, or other legal representative, show the title or legal capacity of the person signing, and be accompanied by evidence of his or her authority to present a claim on behalf of the claimant as agent, attorney, executor, administrator, parent, guardian, conservator, or other legal representative.

§ 1620.4 Investigations.

CSB may investigate, or may request any other Federal agency to investigate, a claim filed under this part.

§ 1620.5 Administrative claim; evidence and information to be submitted.

(a) *Death*. In support of a claim based on death, the claimant may be required to submit the following evidence or information:

(1) An authenticated death certificate or other competent evidence showing cause of death, date of death, and age of the decedent.

(2) Decedent's employment or occupation at time of death, including his or her monthly or yearly salary or earnings (if any), and the duration of his or her last employment or occupation.

(3) Full names, addresses, birth date, kinship and marital status of the decedent's survivors, including identification of those survivors who were dependent on support provided by the decedent at the time of death.

(4) Degree of support afforded by the decedent to each survivor dependent on him or her for support at the time of death.

(5) Decedent's general physical and mental condition before death.

(6) Itemized bills for medical and burial expenses incurred by reason of the incident causing death, or itemized receipts of payment for such expenses.

(7) If damages for pain and suffering before death are claimed, a physician's detailed statement specifying the injuries suffered, duration of pain and suffering, any drugs administered for pain, and the decedent's physical condition in the interval between injuries and death.

(8) True and correct copies of relevant medical treatment records, laboratory and other tests, including X-Rays, MRI, CT scans and other objective evidence of medical evaluation and

diagnosis, treatment of injury/illness, and prognosis, if any had been made.

(9) Any other evidence or information that may have a bearing on either the responsibility of the United States for the death or the amount of damages claimed.

(b) *Personal injury*. In support of a claim for personal injury, including pain and suffering, the claimant may be required to submit the following evidence or information:

(1) A written report by the attending physician or dentist setting forth the nature and extent of the injury, nature and extent of treatment, any degree of temporary or permanent disability, the prognosis, period of hospitalization, and any diminished earning capacity. If damages for pain and suffering are claimed, a physician's detailed statement specifying the duration of pain and suffering, a listing of drugs administered for pain, and the claimant's general physical condition.

(2) True and correct copies of relevant medical treatment records, laboratory and other tests including X-Rays, MRI, CT scans and other objective evidence of medical evaluation and diagnosis, treatment injury/illness and prognosis.

(3) The claimant may be required to submit to a physical or mental examination by a physician employed by CSB or another Federal agency. On written request, CSB will make available to the claimant a copy of the report of the examining physician employed by the United States, provided the claimant has furnished CSB with the information noted in paragraphs (b)(1) and (b)(2) of this section. In addition, the claimant must have made or agrees to make available to CSB all other physicians' reports previously or thereafter made of the physical or mental condition that is subject matter of his or her claim.

(4) Itemized bills for medical, dental, and hospital expenses incurred, and/or itemized receipts of payment for such expenses.

(5) If the prognosis reveals the necessity for future treatment, a statement of the expected treatment and the expected expense for such treatment.

(6) If a claim is made for loss of time from employment, a written statement from his or her employer showing actual time lost from employment, whether he or she is a full-time or part-time employee, and wages or salary actually lost.

(7) If a claim is made for loss of income and the claimant is self-employed, documentary evidence showing the amount of earnings actually lost.

(8) Any other evidence or information that may have a bearing on either the responsibility of the United States for the personal injury or the damages claimed.

(c) *Property damage*. In support of a claim for damage to or loss of property, real or personal, the claimant may be required to submit the following evidence or information:

(1) Proof of ownership of the property.

(2) A detailed statement of the amount claimed with respect to each item of property.

(3) An itemized receipt of payment for necessary repairs or itemized written estimates of the cost of such repairs.

(4) A statement listing date of purchase, purchase price, and salvage value.

(5) Photographs or video footage documenting the damage, including photographs showing the condition of the property at issue both before and after the alleged negligence or wrongful act or omission.

(6) Any other evidence or information that may have a bearing on either the responsibility of the United States for the damage to or loss of property or the damages claimed.

§ 1620.6 Authority to adjust, determine, compromise, and settle.

The General Counsel of CSB, or his or her designee, is delegated authority to consider, ascertain, adjust, determine, compromise and settle claims under the provision of 28 U.S.C. 2672, and this part. The General Counsel, in his or her discretion, has the authority to further delegate the responsibility for adjudicating, considering, adjusting, compromising and settling any claim submitted under the provision of 28 U.S.C. 2672, and this part, that is based on the alleged negligence or wrongful act or omission of a CSB employee acting in

the scope of his or her employment. However, in any case, any offer of compromise or settlement in excess of $5,000 exercised by the CSB Chairperson or any other lawful designee can only be made after a legal review is conducted by an attorney within the CSB Office of General Counsel.

§ 1620.7 Limitations on authority.

(a) An award, compromise, or settlement of a claim under 28 U.S.C. 2672, and this part, in excess of $25,000 can be made only with the prior written approval of the CSB General Counsel and Chairperson, after consultation and approval by the Department of Justice. For purposes of this paragraph a principal claim and any derivative or subrogated claim will be treated as a single claim.

(b) An administrative claim may be adjusted, determined, compromised or settled under this part only after consultation with the Department of Justice when, in the opinion of the General Counsel of CSB, or his or her designee:

(1) A new precedent or a new point of law is involved; or

(2) A question of policy is or may be involved; or

(3) The United States is or may be entitled to indemnity or contribution from a third party and CSB is unable to adjust the third party claim; or

(4) The compromise of a particular claim, as a practical matter, will or may control the disposition of a related claim in which the amount to be paid may exceed $25,000.

(c) An administrative claim may be adjusted, determined, compromised or settled under 28 U.S.C. 2672 and this part only after consultation with the Department of Justice when CSB is informed or is otherwise aware that the United States or an employee, agent or contractor of the United States is involved in litigation based on a claim arising out of the same incident or transaction.

§ 1620.8 Referral to Department of Justice.

When Department of Justice approval or consultation is required, or the advice of the Department of Justice is otherwise to be requested, under this regulation, the written referral or request will be transmitted to the Department of Justice by the General Counsel of CSB, or his or her designee.

§ 1620.9 Final denial of claim.

Final denial of an administrative claim must be in writing and sent to the claimant, his or her agent, attorney, or other legal representative by certified or registered mail. The notification of final denial may include a statement of the reasons for the denial. However, it must include a statement that, if the claimant is dissatisfied with the CSB action, he or she may file suit in an appropriate United States District Court not later than 6 months after the date of mailing of the notifications, along with the admonition that failure to file within this 6 month timeframe could result in the suit being time-barred by the controlling statute of limitations. In the event that a claimant does not hear from the CSB after 6 months have passed from the date that the claim was presented, a claimant should consider the claim denied and, if desired, should proceed with filing a civil action in the appropriate U.S. District Court.

§ 1620.10 Action on approved claim.

(a) Payment of a claim approved under this part is contingent on claimant's execution of a Standard Form 95 (Claim for Damage, Injury or Death); a claims settlement agreement; and a Standard Form 1145 (Voucher for Payment), as well as any other forms as may be required. When a claimant is represented by an attorney, the Voucher for Payment will designate both the claimant and his or her attorney as payees, and the check will be delivered to the attorney, whose address is to appear on the Voucher for payment.

(b) Acceptance by the claimant, his or her agent, attorney, or legal representative, of an award, compromise or settlement made under 28 U.S.C. 2672 or 28 U.S.C. 2677 is final and conclusive on the claimant, his or her agent, attorney, or legal representative, and any other person on whose behalf or for whose benefit the claim has been presented, and constitutes a complete release of any and all claims against the

United States and against any employee of the Federal Government whose act(s) or omission(s) gave rise to the claim, by reason of the same subject matter. To that end, as noted above, the claimant, as well as any agent, attorney or other legal representative that represented the claimant during any phase of the process (if applicable) must execute a settlement agreement with the CSB prior to payment of any funds.

PARTS 1621–1699 [RESERVED]

CHAPTER VII—ENVIRONMENTAL PROTECTION AGENCY AND DEPARTMENT OF DEFENSE; UNIFORM NATIONAL DISCHARGE STANDARDS FOR VESSELS OF THE ARMED FORCES

Part		*Page*
1700	Uniform National Discharge Standards for vessels of the Armed Forces	693
1701–1799	[Reserved]	

PART 1700—UNIFORM NATIONAL DISCHARGE STANDARDS FOR VESSELS OF THE ARMED FORCES

Subpart A—Scope

Sec.
1700.1 Applicability.
1700.2 Effect.
1700.3 Definitions.

Subpart B—Discharge Determinations

1700.4 Discharges requiring control.
1700.5 Discharges not requiring control.

Subpart C—Effect on States

1700.6 Effect on State and local statutes and regulations.

NO-DISCHARGE ZONES

1700.7 No-discharge zones.
1700.8 Discharges for which no-discharge zones can be established.
1700.9 No-discharge zones by State prohibition.
1700.10 No-discharge zones by EPA prohibition.

STATE PETITION FOR REVIEW

1700.11 State petition for review of determinations or standards.
1700.12 Petition requirements.
1700.13 Petition decisions.

Subpart D—Marine Pollution Control Device (MPCD) Performance Standards

1700.14 Aqueous film-forming foam.
1700.15 Catapult water brake tank & post-launch retraction exhaust.
1700.16 Chain locker effluent.
1700.17–1700.18 [Reserved]
1700.19 Controllable pitch propeller hydraulic fluid.
1700.20 Deck runoff.
1700.21 [Reserved]
1700.22 Distillation and reverse osmosis brine.
1700.23 Elevator pit effluent.
1700.24 Firemain systems.
1700.25 Gas turbine water wash.
1700.26 Graywater.
1700.27 Hull coating leachate.
1700.28 Motor gasoline and compensating discharge.
1700.29 Non-oily machinery wastewater.
1700.30 Photographic laboratory drains.
1700.31 Seawater cooling overboard discharge.
1700.32 Seawater piping biofouling prevention.
1700.33 Small boat engine wet exhaust.
1700.34 Sonar dome discharge.
1700.35 Submarine bilgewater.
1700.36 Surface vessel bilgewater/oil-water separator effluent.
1700.37 Underwater ship husbandry.
1700.38 Welldeck discharges.
1700.39 Exceptions.
1700.40 Commingling of discharges.
1700.41 Records.
1700.42 Non-compliance reports.

AUTHORITY: 33 U.S.C. 1322, 1361.

SOURCE: 64 FR 25134, May 10, 1999, unless otherwise noted.

Subpart A—Scope

§ 1700.1 Applicability.

(a) This part applies to the owners and operators of Armed Forces vessels, except where the Secretary of Defense finds that compliance with this part is not in the interest of the national security of the United States. This part does not apply to vessels while they are under construction, vessels in drydock, amphibious vehicles, or vessels under the jurisdiction of the Department of Transportation other than those of the Coast Guard.

(b) This part also applies to States and political subdivisions of States.

§ 1700.2 Effect.

(a) This part identifies those discharges, other than sewage, incidental to the normal operation of vessels of the Armed Forces that require control within the navigable waters of the United States, including the territorial seas and the waters of the contiguous zone, and those discharges that do not require control. Discharges requiring control are identified in § 1700.4. Discharges not requiring control are identified in § 1700.5. Federal standards of performance for each required Marine Pollution Control Device are listed in §§ 1700.14 through 1700.38. Federal standards of performance apply to all vessels, whether existing or new, and regardless of vessel class, type, or size, unless otherwise expressly provided in §§ 1700.14 through 1700.38.

(b) This part prohibits States and their political subdivisions from adopting or enforcing State or local statutes or regulations controlling the discharges from Armed Forces vessels listed in §§ 1700.4 and 1700.5 according to the timing provisions in § 1700.6, except

to establish a no-discharge zone by State prohibition in accordance with § 1700.9, or to apply for a no-discharge zone by EPA prohibition in accordance with § 1700.10. This part also provides a mechanism for States to petition the Administrator and the Secretary to review a determination of whether a discharge requires control, or to review a Federal standard of performance for a Marine Pollution Control Device, in accordance with §§ 1700.11 through 1700.13.

[64 FR 25134, May 10, 1999, as amended at 82 FR 3182, Jan. 11, 2017]

§ 1700.3 Definitions.

Administrator means the Administrator of the United States Environmental Protection Agency or that person's authorized representative.

Armed Forces vessel means a vessel owned or operated by the United States Department of Defense or the United States Coast Guard, other than vessels that are time or voyage chartered by the Armed Forces, vessels of the U.S. Army Corps of Engineers, or vessels that are memorials or museums.

Bioaccumulative means the opposite of *not bioaccumulative*.

Biodegradable means the following for purposes of the standards:

(1) Regarding *environmentally acceptable lubricants* and greases, *biodegradable* means lubricant formulations that contain at least 90% (weight in weight concentration or w/w) or grease formulations that contain at least 75% (w/w) of a constituent substance or constituent substances (only stated substances present above 0.10% must be assessed) that each demonstrate either the removal of at least 70% of dissolved organic carbon, production of at least 60% of the theoretical carbon dioxide, or consumption of at least 60% of the theoretical oxygen demand within 28 days. Test methods include: Organization for Economic Co-operation and Development Test Guidelines 301 A–F, 306, and 310, ASTM 5864, ASTM D–7373, OCSPP Harmonized Guideline 835.3110, and International Organization for Standardization 14593:1999. For lubricant formulations, the 10% (w/w) of the formulation that need not meet the above biodegradability requirements, up to 5% (w/w) may be non-biodegradable, but not bioaccumulative, while the remaining 5–10% must be inherently biodegradable. For grease formulations, the 25% (w/w) of the formulation that need not meet the above biodegradability requirement, the constituent substances may be either inherently biodegradable or non-biodegradable, but may not be bioaccumulative. Test methods to demonstrate inherent biodegradability include: OECD Test Guidelines 302C (>70% biodegradation after 28 days) or OECD Test Guidelines 301 A–F (>20% but <60% biodegradation after 28 days).

(2) Regarding cleaning products, *biodegradable* means products that demonstrate either the removal of at least 70% of dissolved organic carbon, production of at least 60% of the theoretical carbon dioxide, or consumption of at least 60% of the theoretical oxygen demand within 28 days. Test methods include: Organization for Economic Cooperation and Development Test Guidelines 301 A–F, 306, and 310, and International Organization for Standardization 14593:1999.

(3) Regarding biocidal substances, *biodegradable* means a compound or mixture that yields 60% of theoretical maximum carbon dioxide and demonstrate a removal of at least 70% of dissolved organic carbon within 28 days as described in EPA 712–C–98–075 (OPPTS 835.3100 Aerobic Aquatic Biodegradation).

Discharge incidental to the normal operation of a vessel means a discharge, including, but not limited to: graywater, bilgewater, cooling water, weather deck runoff, ballast water, oil water separator effluent, and any other pollutant discharge from the operation of a marine propulsion system, shipboard maneuvering system, crew habitability system, or installed major equipment, such as an aircraft carrier elevator or a catapult, or from a protective, preservative, or absorptive application to the hull of a vessel; and a discharge in connection with the testing, maintenance, and repair of any of the aforementioned systems whenever the vessel is waterborne, including pierside. A discharge incidental to normal operation does not include:

(1) Sewage;

(2) A discharge of rubbish, trash, or garbage;

(3) A discharge of air emissions resulting from the operation of a vessel propulsion system, motor driven equipment, or incinerator;

(4) A discharge that requires a National Pollutant Discharge Elimination System (NPDES) permit under the Clean Water Act; or

(5) A discharge containing source, special nuclear, or byproduct materials regulated by the Atomic Energy Act.

Environmental Protection Agency, abbreviated EPA, means the United States Environmental Protection Agency.

Environmentally acceptable lubricants means lubricants that are *biodegradable, minimally-toxic,* and *not bioaccumulative* as defined in this subpart. The following labeling programs and organizations meet the definition of being *environmentally acceptable lubricants:* Blue Angel, European Ecolabel, Nordic Swan, the Swedish Standards SS 155434 and 155470, Safer Choice, and the Convention for the Protection of the Marine Environment of the North-East Atlantic (OSPAR) requirements.

Federally-protected waters means waters within 12 miles of the United States that are also part of any of the following:

(1) Marine sanctuaries designated under the National Marine Sanctuaries Act (16 U.S.C. 1431 *et seq.*) or Marine National Monuments designated under the Antiquities Act of 1906;

(2) A unit of the National Wildlife Refuge System, including Wetland Management Districts, Waterfowl Production Areas, National Game Preserves, Wildlife Management Areas, and National Fish and Wildlife Refuges;

(3) National Wilderness Areas; and

(4) Any component designated under the National Wild and Scenic Rivers System.

Great Lakes means waters of the United States extending to the international maritime boundary with Canada in Lake Ontario, Lake Erie, Lake Huron (including Lake St. Clair), Lake Michigan, and Lake Superior, and the connecting channels (Saint Marys River, Saint Clair River, Detroit River, Niagara River, and Saint Lawrence River to the international maritime boundary with Canada).

Hazardous material means any hazardous material as defined in 49 CFR 171.8.

Marine Pollution Control Device, abbreviated MPCD, means any equipment or management practice installed or used on an Armed Forces vessel that is designed to receive, retain, treat, control, or discharge a discharge incidental to the normal operation of a vessel, and that is determined by the Administrator and Secretary to be the most effective equipment or management practice to reduce the environmental impacts of the discharge consistent with the considerations in Clean Water Act section 312(n)(2)(B).

Minimally-toxic means a substance must pass either OECD 201, 202, and 203 for acute toxicity testing, or OECD 210 and 211 for chronic toxicity testing. For purposes of the standards, equivalent toxicity data for marine species, including methods ISO/DIS 10253 for algae, ISO TC147/SC5/W62 for crustacean, and OSPAR 2005 for fish, may be substituted for OECD 201, 202, and 203. If a substance is evaluated for the formulation and main constituents, the LC50 of fluids must be at least 100 mg/L and the LC50 of greases, two-stroke oils, and all other total loss lubricants must be at least 1000 mg/L. If a substance is evaluated for each constituent substance, rather than the complete formulation and main compounds, then constituents comprising less than 20% of fluids can have an LC50 between 10–100 mg/L or a no-observed-effect concentration (NOEC) between 1–10 mg/L, constituents comprising less than 5% of fluids can have an LC50 between 1–10 mg/L or a NOEC between 0.1–1 mg/L, and constituents comprising less than 1% of fluids, can have an LC50 less than 1 mg/L or a NOEC between 0–0.1 mg/L.

Minimally-toxic soaps, cleaners, and detergents means any substance or mixture of substances which has an acute aquatic toxicity value (LC50) corresponding to a concentration greater than 10 parts per million (ppm) and does not produce byproducts with an acute aquatic toxicity value (LC50) corresponding to a concentration less than 10 ppm. Minimally-toxic soaps, cleaners, and detergents typically contain little to no nonylphenols.

No-discharge zone means an area of specified waters established pursuant to this regulation into which one or more specified discharges incidental to the normal operation of Armed Forces vessels, whether treated or untreated, are prohibited.

Not bioaccumulative means any of the following: The partition coefficient in the marine environment is log Kow <3 or >7 using test methods OECD 117 and 107; molecular mass >800 Daltons; molecular diameter >1.5 nanometer; bioconcentration factor (BCF) or bioaccumulation factor (BAF) is <100 L/kg, using OECD 305, OCSPP 850.1710 or OCSPP 850.1730, or a field-measured BAF; or polymer with molecular weight (MW) fraction below 1,000 g/mol is <1%.

Person in charge (PIC) means the single individual named master of the vessel or placed in charge of the vessel, by the U.S. Department of Defense or by the Department in which the U.S. Coast Guard is operating, as appropriate, and who is responsible for the operation, manning, victualing, and supplying of the vessel of the Armed Forces. Examples of a PIC include, but are not limited to:

(1) A Commanding Officer, Officer in Charge, or senior commissioned officer on board the vessel;

(2) A civilian, military, or U.S. Coast Guard person assigned to a shore command or activity that has been designated as the PIC for one or more vessels, such as a group of boats or craft;

(3) A Tugmaster, Craftmaster, Coxswain, or other senior enlisted person onboard the vessel;

(4) A licensed civilian mariner onboard a Military Sealift Command vessel; or

(5) A contracted commercial person at a shore installation that is not part of the Armed Forces but as identified by the U.S. Department of Defense or the Department in which the U.S. Coast Guard is operating.

Phosphate-free soaps, cleaners, and detergents means any substance or mixture of substances which contain, by weight, 0.5% or less of phosphates or derivatives of phosphates.

Secretary means the Secretary of the United States Department of Defense or that person's authorized representative.

Toxic materials means any toxic pollutant identified in 40 CFR 401.15.

State means a state, the District of Columbia, the Commonwealth of Puerto Rico, the Virgin Islands, Guam, American Samoa, the Commonwealth of the Northern Mariana Islands, and the Trust Territory of the Pacific Islands.

United States includes the States, the District of Columbia, the Commonwealth of Puerto Rico, the Virgin Islands, Guam, American Samoa, the Canal Zone, and the Trust Territory of the Pacific Islands.

Vessel includes every description of watercraft or other artificial contrivance used, or capable of being used, as a means of transportation on navigable waters of the United States or waters of the contiguous zone, but does not include amphibious vehicles.

Waters subject to UNDS means the navigable waters of the United States, including the territorial seas and the waters of the contiguous zone, as these terms are defined in the Clean Water Act (33 U.S.C. 1362).

[64 FR 25134, May 10, 1999, as amended at 82 FR 3182, Jan. 11, 2017; 85 FR 43475, July 17, 2020]

Subpart B—Discharge Determinations

§ 1700.4 Discharges requiring control.

For the following discharges incidental to the normal operation of Armed Forces vessels, the Administrator and the Secretary have determined that it is reasonable and practicable to require use of a Marine Pollution Control Device for at least one class of vessel to mitigate adverse impacts on the marine environment:

(a) Aqueous Film-Forming Foam: the firefighting foam and seawater mixture discharged during training, testing, or maintenance operations.

(b) Catapult Water Brake Tank & Post-Launch Retraction Exhaust: the oily water skimmed from the water tank used to stop the forward motion of an aircraft carrier catapult, and the condensed steam discharged when the catapult is retracted.

(c) Chain Locker Effluent: the accumulated precipitation and seawater that is emptied from the compartment used to store the vessel's anchor chain.

(d) Clean Ballast: the seawater taken into, and discharged from, dedicated ballast tanks to maintain the stability of the vessel and to adjust the buoyancy of submarines.

(e) Compensated Fuel Ballast: the seawater taken into, and discharged from, ballast tanks designed to hold both ballast water and fuel to maintain the stability of the vessel.

(f) Controllable Pitch Propeller Hydraulic Fluid: the hydraulic fluid that discharges into the surrounding seawater from propeller seals as part of normal operation, and the hydraulic fluid released during routine maintenance of the propellers.

(g) Deck Runoff: the precipitation, washdowns, and seawater falling on the weather deck of a vessel and discharged overboard through deck openings.

(h) Dirty Ballast: the seawater taken into, and discharged from, empty fuel tanks to maintain the stability of the vessel.

(i) Distillation and Reverse Osmosis Brine: the concentrated seawater (brine) produced as a byproduct of the processes used to generate freshwater from seawater.

(j) Elevator Pit Effluent: the liquid that accumulates in, and is discharged from, the sumps of elevator wells on vessels.

(k) Firemain Systems: the seawater pumped through the firemain system for firemain testing, maintenance, and training, and to supply water for the operation of certain vessel systems.

(l) Gas Turbine Water Wash: the water released from washing gas turbine components.

(m) Graywater: galley, bath, and shower water, as well as wastewater from lavatory sinks, laundry, interior deck drains, water fountains, and shop sinks.

(n) Hull Coating Leachate: the constituents that leach, dissolve, ablate, or erode from the paint on the hull into the surrounding seawater.

(o) Motor Gasoline and Compensating Discharge: the seawater taken into, and discharged from, motor gasoline tanks to eliminate free space where vapors could accumulate.

(p) Non-Oily machinery wastewater: the combined wastewater from the operation of distilling plants, water chillers, valve packings, water piping, low- and high-pressure air compressors, and propulsion engine jacket coolers.

(q) Photographic Laboratory Drains: the laboratory wastewater resulting from processing of photographic film.

(r) Seawater Cooling Overboard Discharge: the discharge of seawater from a dedicated system that provides noncontact cooling water for other vessel systems.

(s) Seawater Piping Biofouling Prevention: the discharge of seawater containing additives used to prevent the growth and attachment of biofouling organisms in dedicated seawater cooling systems on selected vessels.

(t) Small Boat Engine Wet Exhaust: the seawater that is mixed and discharged with small boat propulsion engine exhaust to cool the exhaust and quiet the engine.

(u) Sonar Dome Discharge: the leaching of antifoulant materials into the surrounding seawater and the release of seawater or freshwater retained within the sonar dome.

(v) Submarine Bilgewater: the wastewater from a variety of sources that accumulates in the lowest part of the submarine (i.e., bilge).

(w) Surface Vessel Bilgewater/Oil-Water Separator Effluent: the wastewater from a variety of sources that accumulates in the lowest part of the vessel (the bilge), and the effluent produced when the wastewater is processed by an oil water separator.

(x) Underwater Ship Husbandry: the materials discharged during the inspection, maintenance, cleaning, and repair of hulls performed while the vessel is waterborne.

(y) Welldeck Discharges: the water that accumulates from seawater flooding of the docking well (welldeck) of a vessel used to transport, load, and unload amphibious vessels, and from maintenance and freshwater washings of the welldeck and equipment and vessels stored in the welldeck.

§ 1700.5 Discharges not requiring control.

For the following discharges incidental to the normal operation of Armed Forces vessels, the Administrator and the Secretary have determined that it is not reasonable or practicable to require use of a Marine Pollution Control Device to mitigate adverse impacts on the marine environment:

(a) Boiler Blowdown: the water and steam discharged when a steam boiler is blown down, or when a steam safety valve is tested.

(b) Catapult Wet Accumulator Discharge: the water discharged from a catapult wet accumulator, which stores a steam/water mixture for launching aircraft from an aircraft carrier.

(c) Cathodic Protection: the constituents released into surrounding water from sacrificial anode or impressed current cathodic hull corrosion protection systems.

(d) Freshwater Lay-up: the potable water that is discharged from the seawater cooling system while the vessel is in port, and the cooling system is in lay-up mode (a standby mode where seawater in the system is replaced with potable water for corrosion protection).

(e) Mine Countermeasures Equipment Lubrication: the constituents released into the surrounding seawater by erosion or dissolution from lubricated mine countermeasures equipment when the equipment is deployed and towed.

(f) Portable Damage Control Drain Pump Discharge: the seawater pumped through the portable damage control drain pump and discharged overboard during testing, maintenance, and training activities.

(g) Portable Damage Control Drain Pump Wet Exhaust: the seawater mixed and discharged with portable damage control drain pump exhaust to cool the exhaust and quiet the engine.

(h) Refrigeration and Air Conditioning Condensate: the drainage of condensed moisture from air conditioning units, refrigerators, freezers, and refrigerated spaces.

(i) Rudder Bearing Lubrication: the oil or grease released by the erosion or dissolution from lubricated bearings that support the rudder and allow it to turn freely.

(j) Steam Condensate: the condensed steam discharged from a vessel in port, where the steam originates from port facilities.

(k) Stern Tube Seals and Underwater Bearing Lubrication: the seawater pumped through stern tube seals and underwater bearings to lubricate and cool them during normal operation.

(l) Submarine Acoustic Countermeasures Launcher Discharge: the seawater that is mixed with acoustic countermeasure device propulsion gas following a countermeasure launch that is then exchanged with surrounding seawater, or partially drained when the launch assembly is removed from the submarine for maintenance.

(m) Submarine Emergency Diesel Engine Wet Exhaust: the seawater that is mixed and discharged with submarine emergency diesel engine exhaust to cool the exhaust and quiet the engine.

(n) Submarine Outboard Equipment Grease and External Hydraulics: the grease released into the surrounding seawater by erosion or dissolution from submarine equipment exposed to seawater.

Subpart C—Effect on States

§ 1700.6 Effect on State and local statutes and regulations.

(a) After the effective date of a final rule determining that it is not reasonable and practicable to require use of a Marine Pollution Control Device regarding a particular discharge incidental to the normal operation of an Armed Forces vessel, States or political subdivisions of States may not adopt or enforce any State or local statute or regulation, including issuance or enforcement of permits under the National Pollutant Discharge Elimination System, controlling that discharge, except that States may establish a no-discharge zone by State prohibition (as provided in § 1700.9), or apply for a no-discharge zone by EPA prohibition (as provided in § 1700.10).

(b)(1) After the effective date of a final rule determining that it is reasonable and practicable to require use of a

Marine Pollution Control Device regarding a particular discharge incidental to the normal operation of an Armed Forces vessel, States may apply for a no-discharge zone by EPA prohibition (as provided in § 1700.10) for that discharge.

(2) After the effective date of a final rule promulgated by the Secretary governing the design, construction, installation, and use of a Marine Pollution Control Device for a discharge listed in § 1700.4, States or political subdivisions of States may not adopt or enforce any State or local statute or regulation, including issuance or enforcement of permits under the National Pollutant Discharge Elimination System, controlling that discharge except that States may establish a no-discharge zone by State prohibition (as provided in § 1700.9), or apply for a no-discharge zone by EPA prohibition (as provided in § 1700.10).

(c) The Governor of any State may submit a petition requesting that the Administrator and Secretary review a determination of whether a Marine Pollution Control Device is required for any discharge listed in § 1700.4 or § 1700.5, or review a Federal standard of performance for a Marine Pollution Control Device.

NO-DISCHARGE ZONES

§ 1700.7 No-discharge zones.

For this part, a no-discharge zone is a waterbody, or portion thereof, where one or more discharges incidental to the normal operation of Armed Forces vessels, whether treated or not, are prohibited. A no-discharge zone is established either by State prohibition using the procedures in § 1700.9, or by EPA prohibition, upon application of a State, using the procedures in § 1700.10.

§ 1700.8 Discharges for which no-discharge zones can be established.

(a) A no-discharge zone may be established by State prohibition for any discharge listed in § 1700.4 or § 1700.5 following the procedures in § 1700.9. A no-discharge zone established by a State using these procedures may apply only to those discharges that have been preempted from other State or local regulation pursuant to § 1700.6.

(b) A no-discharge zone may be established by EPA prohibition for any discharge listed in § 1700.4 or § 1700.5 following the procedures in § 1700.10.

§ 1700.9 No-discharge zones by State prohibition.

(a) A State seeking to establish a no-discharge zone by State prohibition must send to the Administrator the following information:

(1) The discharge from § 1700.4 or § 1700.5 to be prohibited within the no-discharge zone.

(2) A detailed description of the waterbody, or portions thereof, to be included in the prohibition. The description must include a map, preferably a USGS topographic quadrant map, clearly marking the zone boundaries by latitude and longitude.

(3) A determination that the protection and enhancement of the waters described in paragraph (a)(2) of this section require greater environmental protection than provided by existing Federal standards.

(4) A complete description of the facilities reasonably available for collecting the discharge including:

(i) A map showing their location(s) and a written location description.

(ii) A demonstration that the facilities have the capacity and capability to provide safe and sanitary removal of the volume of discharge being prohibited in terms of both vessel berthing and discharge reception.

(iii) The schedule of operating hours of the facilities.

(iv) The draft requirements of the vessel(s) that will be required to use the facilities and the available water depth at the facilities.

(v) Information showing that handling of the discharge at the facilities is in conformance with Federal law.

(5) Information on whether vessels other than those of the Armed Forces are subject to the same type of prohibition. If the State is not applying the prohibition to all vessels in the area, the State must demonstrate the technical or environmental basis for applying the prohibition only to Armed Forces vessels. The following information must be included in the technical or environmental basis for treating Armed Forces vessels differently:

(i) An analysis showing the relative contributions of the discharge from Armed Forces and non-Armed Forces vessels.

(ii) A description of State efforts to control the discharge from non-Armed Forces vessels.

(b) The information provided under paragraph (a) of this section must be sufficient to enable EPA to make the two determinations listed below. Prior to making these determinations, EPA will consult with the Secretary on the adequacy of the facilities and the operational impact of any prohibition on Armed Forces vessels.

(1) Adequate facilities for the safe and sanitary removal of the discharge are reasonably available for the specified waters.

(2) The prohibition will not have the effect of discriminating against vessels of the Armed Forces by reason of the ownership or operation by the Federal Government, or the military function, of the vessels.

(c) EPA will notify the State in writing of the result of the determinations under paragraph (b) of this section, and will provide a written explanation of any negative determinations. A no-discharge zone established by State prohibition will not go into effect until EPA determines that the conditions of paragraph (b) of this section have been met.

§ 1700.10 No-discharge zones by EPA prohibition.

(a) A State requesting EPA to establish a no-discharge zone must send to the Administrator an application containing the following information:

(1) The discharge from § 1700.4 or § 1700.5 to be prohibited within the no-discharge zone.

(2) A detailed description of the waterbody, or portions thereof, to be included in the prohibition. The description must include a map, preferably a USGS topographic quadrant map, clearly marking the zone boundaries by latitude and longitude.

(3) A technical analysis showing why protection and enhancement of the waters described in paragraph (a)(2) of this section require a prohibition of the discharge. The analysis must provide specific information on why the discharge adversely impacts the zone and how prohibition will protect the zone. In addition, the analysis should characterize any sensitive areas, such as aquatic sanctuaries, fish-spawning and nursery areas, pristine areas, areas not meeting water quality standards, drinking water intakes, and recreational areas.

(4) A complete description of the facilities reasonably available for collecting the discharge including:

(i) A map showing their location(s) and a written location description.

(ii) A demonstration that the facilities have the capacity and capability to provide safe and sanitary removal of the volume of discharge being prohibited in terms of both vessel berthing and discharge reception.

(iii) The schedule of operating hours of the facilities.

(iv) The draft requirements of the vessel(s) that will be required to use the facilities and the available water depth at the facilities.

(v) Information showing that handling of the discharge at the facilities is in conformance with Federal law.

(5) Information on whether vessels other than those of the Armed Forces are subject to the same type of prohibition. If the State is not applying a prohibition to other vessels in the area, the State must demonstrate the technical or environmental basis for applying a prohibition only to Armed Forces vessels. The following information must be included in the technical or environmental basis for treating Armed Forces vessels differently:

(i) An analysis showing the relative contributions of the discharge from Armed Forces and non-Armed Forces vessels.

(ii) A description of State efforts to control the discharge from non-Armed Forces vessels.

(b) The information provided under paragraph (a) of this section must be sufficient to enable EPA to make the three determinations listed below. Prior to making these determinations, EPA will consult with the Secretary on the adequacy of the facilities and the operational impact of the prohibition on Armed Forces vessels.

(1) The protection and enhancement of the specified waters require a prohibition of the discharge.

(2) Adequate facilities for the safe and sanitary removal of the discharge are reasonably available for the specified waters.

(3) The prohibition will not have the effect of discriminating against vessels of the Armed Forces by reason of the ownership or operation by the Federal Government, or the military function, or the vessels.

(c) If the three conditions in paragraph (b) of this section are met, EPA will by regulation establish the no-discharge zone. If the conditions in paragraphs (b) (1) and (3) of this section are met, but the condition in paragraph (b)(2) of this section is not met, EPA may establish the no-discharge zone if it determines that the significance of the waters and the potential impact of the discharge are of sufficient magnitude to warrant any resulting constraints on Armed Forces vessels.

(d) EPA will notify the State of its decision on the no-discharge zone application in writing. If EPA approves the no-discharge zone application, EPA will by regulation establish the no-discharge zone by modification to this part. A no-discharge zone established by EPA prohibition will not go into effect until the effective date of the regulation.

STATE PETITION FOR REVIEW

§ 1700.11 State petition for review of determinations or standards.

The Governor of any State may submit a petition requesting that the Administrator and Secretary review a determination of whether a Marine Pollution Control Device is required for any discharge listed in § 1700.4 or § 1700.5, or review a Federal standard of performance for a Marine Pollution Control Device. A State may submit a petition only where there is new, significant information not considered previously by the Administrator and Secretary.

§ 1700.12 Petition requirements.

A petition for review of a determination or standard must include:

(a) The discharge from § 1700.4 or § 1700.5 for which a change in determination is requested, or the performance standard from § 1700.14 for which review is requested.

(b) The scientific and technical information on which the petition is based.

(c) A detailed explanation of why the State believes that consideration of the new information should result in a change to the determination or the standard on a nationwide basis, and an explanation of how the new information is relevant to one or more of the following factors:

(1) The nature of the discharge.

(2) The environmental effects of the discharge.

(3) The practicability of using a Marine Pollution Control Device.

(4) The effect that installation or use of the Marine Pollution Control Device would have on the operation or operational capability of the vessel.

(5) Applicable United States law.

(6) Applicable international standards.

(7) The economic costs of the installation and use of the Marine Pollution Control Device.

§ 1700.13 Petition decisions.

The Administrator and the Secretary will evaluate the petition and grant or deny the petition no later than two years after the date of receipt of the petition. If the Administrator and Secretary grant the petition, they will undertake rulemaking to amend this part. If the Administrator and Secretary deny the petition, they will provide the State with a written explanation of why they denied it.

Subpart D—Marine Pollution Control Device (MPCD) Performance Standards

SOURCE: 82 3183, Jan. 11, 2017, unless otherwise noted.

§ 1700.14 Aqueous film-forming foam.

(a) For the purposes of this section, regulated aqueous film-forming foam (AFFF) refers only to firefighting foam and seawater mixture discharged during training, testing, or maintenance operations.

(b) For all vessels that sail seaward of waters subject to UNDS at least once per month, the discharge of AFFF is prohibited.

(c) For all vessels that do not sail seaward of waters subject to UNDS at least once per month:

(1) The discharge of fluorinated AFFF is prohibited; and

(2) The discharges of non-fluorinated or alternative foaming agent are prohibited in port or in or near federally-protected waters, and must occur as far from shore as possible.

§ 1700.15 Catapult water brake tank & post-launch retraction exhaust.

(a) Discharges of catapult water brake tank effluent are prohibited.

(b) The number of post-launch retractions must be limited to the minimum number required to test and validate the system and conduct qualification and operational training.

[85 FR 43475, July 17, 2020]

§ 1700.16 Chain locker effluent.

(a) For all vessels, except submarines, the anchor chain must be carefully and thoroughly washed down(*i.e.*, more than a cursory rinse) as it is being hauled out of the water to remove sediment and organisms.

(b) For all vessels, the chain lockers must be cleaned periodically to eliminate accumulated sediments and any potential accompanying pollutants. The dates of all chain locker inspections must be recorded in the ship's log or other vessel recordkeeping documentation.

(c) For all vessels that sail seaward of waters subject to UNDS at least once per month, the rinsing or pumping out of chain lockers is prohibited.

(d) For all vessels that do not sail seaward of waters subject to UNDS at least once per month, the rinsing or pumping out of chain lockers must occur as far from shore as possible and, if technically feasible, the rinsing or pumping out of chain lockers must not occur in federally-protected waters.

§§ 1700.17–1700.18 [Reserved]

§ 1700.19 Controllable pitch propeller hydraulic fluid.

(a) The protective seals on controllable pitch propellers must be maintained to minimize the leaking of hydraulic fluid.

(b) To the greatest extent practicable, maintenance activities on controllable pitch propellers must be conducted when a vessel is in drydock. If maintenance and repair activities must occur when the vessel is not in drydock, appropriate spill response equipment (*e.g.*, oil booms) must be used to contain and clean any oil leakage.

(c) The discharge of controllable pitch propeller hydraulic fluid must not contain oil in quantities that:

(1) Cause a film or sheen upon or discoloration of the surface of the water or adjoining shorelines; or

(2) Cause a sludge or emulsion to be deposited beneath the surface of the water or upon adjoining shorelines; or

(3) Contain an oil content above 15 ppm as measured by EPA Method 1664a (as defined in 40 CFR 136.3) or other appropriate method for determination of oil content as accepted by the International Maritime Organization (IMO) (*e.g.*, ISO Method 9377) or U.S. Coast Guard; or

(4) Otherwise are harmful to the public health or welfare of the United States.

[85 FR 43475, July 17, 2020]

§ 1700.20 Deck runoff.

(a) Flight deck washdowns are prohibited.

(b) Minimize deck washdowns while in port and in federally-protected waters.

(c) Prior to performing a deck washdown, exposed decks must be broom cleaned and on-deck debris, garbage, paint chips, residues, and spills must be removed, collected, and disposed of onshore in accordance with any applicable solid waste or hazardous substance management and disposal requirements.

(d) If a deck washdown or above water line hull cleaning will result in a discharge, it must be conducted with minimally-toxic and phosphate-free soaps, cleaners, and detergents. The use of soaps that are labeled toxic is prohibited. Furthermore, soaps, cleaners, and detergents should not be caustic and must be biodegradable. All soaps and cleaners must be used as directed by the label.

(e) Where feasible, machinery on deck must have coamings or drip pans,

where necessary, to prevent spills and collect any oily discharge that may leak from machinery. The drip pans must be drained to a waste container for disposal onshore in accordance with any applicable oil and hazardous substance management and disposal requirements. The presence of floating solids, visible foam, halogenated phenol compounds, dispersants, and surfactants in deck washdowns must be minimized.

(f) Topside surfaces and other above water line portions of the vessel must be well maintained to minimize the discharge of rust (and other corrosion by-products), cleaning compounds, paint chips, non-skid material fragments, and other materials associated with exterior topside surface preservation. Residual paint droplets entering the water must be minimized when conducting maintenance painting. The discharge of unused paint is prohibited. Paint chips and unused paint residues must be collected and disposed of onshore in accordance with any applicable solid waste and hazardous substance management and disposal requirements.

(g) When vessels conduct underway fuel replenishment, scuppers must be plugged to prevent the discharge of oil. Any oil spilled must be cleaned, managed, and disposed of onshore in accordance with any applicable oil and hazardous substance management and disposal requirements.

[85 FR 43475, July 17, 2020]

§ 1700.21 [Reserved]

§ 1700.22 Distillation and reverse osmosis brine.

The discharge of brine from the distillation system and the discharge of reverse osmosis reject water are prohibited if they come in contact with machinery or industrial equipment (other than distillation or reverse osmosis machinery), toxic or hazardous materials, or wastes.

§ 1700.23 Elevator pit effluent.

(a) The direct discharge of elevator pit effluent is prohibited.

(b) Notwithstanding the prohibition of direct discharges of elevator pit effluent overboard, if the elevator pit effluent is commingled with any other discharge for the purposes of treatment prior to discharge, then under no circumstances may oils, including oily mixtures, be discharged from that combined discharge in quantities that:

(1) Cause a film or sheen upon or discoloration of the surface of the water or adjoining shorelines; or

(2) Cause a sludge or emulsion to be deposited beneath the surface of the water or upon adjoining shorelines; or

(3) Contain an oil content above 15 ppm as measured by EPA Method 1664a or other appropriate method for determination of oil content as accepted by the International Maritime Organization (IMO) (*e.g.*, ISO Method 9377) or U.S. Coast Guard; or

(4) Otherwise are harmful to the public health or welfare of the United States.

§ 1700.24 Firemain systems.

(a) Firemain systems may be discharged for testing and inspections of the firemain system. To the greatest extent practicable, conduct maintenance and training outside of port and as far away from shore as possible. Firemain systems may be discharged in port for certification, maintenance, and training requirements if the intake comes directly from the surrounding waters or potable water supplies and there are no additions (*e.g.*, aqueous film-forming foam) to the discharge.

(b) Firemain systems must not be discharged in federally-protected waters except when needed to washdown the anchor chain to comply with anchor washdown requirements in Subpart 1700.16.

(c) Firemain systems may be used for secondary uses if the intake comes directly from the surrounding waters or potable water supplies.

[85 FR 43476, July 17, 2020]

§ 1700.25 Gas turbine water wash.

(a) The direct discharge of gas turbine water wash is prohibited.

(b) To the greatest extent practicable, gas turbine water wash must be collected separately and disposed of onshore in accordance with any applicable solid waste and hazardous substance management and disposal requirements.

(c) Notwithstanding the prohibition of direct discharges of gas turbine water wash overboard, if the gas turbine water wash is commingled with any other discharge for the purposes of treatment prior to discharge then under no circumstances may oils, including oily mixtures be discharged from that combined discharge in quantities that:

(1) Cause a film or sheen upon or discoloration of the surface of the water or adjoining shorelines; or

(2) Cause a sludge or emulsion to be deposited beneath the surface of the water or upon adjoining shorelines; or

(3) Contain an oil content above 15 ppm as measured by EPA Method 1664a or other appropriate method for determination of oil content as accepted by the International Maritime Organization (IMO) (*e.g.*, ISO Method 9377) or U.S. Coast Guard; or

(4) Otherwise are harmful to the public health or welfare of the United States.

§ 1700.26 Graywater.

(a) For discharges from vessels that have the capacity to hold graywater:

(1) Graywater must not be discharged in federally-protected waters or the Great Lakes.

(2) Graywater must not be discharged within one mile of shore if an onshore facility is available and disposal at such a facility is reasonable and practicable.

(3) Production and discharge of graywater must be minimized within one mile of shore when an onshore facility is either not available or use of such a facility is not reasonable and practicable.

(b) For discharges from vessels that do not have the capacity to hold graywater:

(1) Production and discharge of graywater must be minimized in federally-protected waters or the Great Lakes.

(2) Graywater must not be discharged within one mile of shore if an onshore facility is available and disposal at such a facility is reasonable and practicable.

(3) Production and discharge of graywater must be minimized within one mile of shore when an onshore facility is either not available or use of such a facility is not reasonable and practicable.

(c) Large quantities of cooking oils (*e.g.*, from a deep fat fryer), including animal fats and vegetable oils, must not be added to the graywater system. Small quantities of cooking oils (*e.g.*, from pot and dish rinsing) must be minimized if added to the graywater system within three miles of shore.

(d) Minimally-toxic soaps, cleaners, and detergents and phosphate-free soaps, cleaners, and detergents must be used in the galley, scullery, and laundry. These soaps, cleaners, and detergents should also be free from bioaccumulative compounds and not lead to extreme shifts in the receiving water pH. For purposes of this subparagraph, extreme shifts means causing the receiving water pH to fall below 6.0 or rise above 9.0 as a direct result of the discharge.

(e) The discharge of graywater must not contain oil in quantities that:

(1) Cause a film or sheen upon or discoloration of the surface of the water or adjoining shorelines; or

(2) Cause a sludge or emulsion to be deposited beneath the surface of the water or upon adjoining shorelines; or

(3) Contain an oil content above 15 ppm as measured by EPA Method 1664a (as defined at 40 CFR 136.3) or other appropriate method for determination of oil content as accepted by the International Maritime Organization (IMO) (*e.g.*, ISO Method 9377) or U.S. Coast Guard; or

(4) Otherwise are harmful to the public health or welfare of the United States.

[85 FR 43476, July 17, 2020]

§ 1700.27 Hull coating leachate.

(a) Antifouling hull coatings subject to registration under the Federal Insecticide, Fungicide, and Rodenticide Act (FIFRA) (7 U.S.C 136 *et seq.*) must be applied, maintained, and removed in a manner consistent with requirements on the coatings' FIFRA label.

(b) Antifouling hull coatings not subject to FIFRA registration (*i.e.*, exempt or not produced for sale and distribution in the United States) must not contain any biocides or *toxic materials* banned for use in the United States.

This performance standard applies to all vessels, including vessels with a hull coating applied outside the United States.

(c) Antifouling hull coatings must not contain tributyltin (TBT).

(d) Antifouling hull coatings must not contain any organotin compounds when the organotin is used as a biocide. Antifouling hull coatings may contain small quantities of organotin compounds other than tributyltin (*e.g.*, dibutyltin) when the organotin is acting as a chemical catalyst and not present above 2,500 milligrams total tin per kilogram of dry paint film. In addition, any antifouling hull coatings containing organotin must be designed to not slough or peel from the vessel hull.

(e) Antifouling hull coatings that contain TBT or other organotin compounds that are used as a biocide must be removed or an overcoat must be applied.

(f) Incidental amounts of antifouling hull coating discharged after contact with other hard surfaces (*e.g.*, moorings) are permissible.

(g) To the greatest extent practicable, use non-copper based and less toxic antifouling hull coatings. To the greatest extent practicable, use antifouling hull coatings with the lowest effective biocide release rates, rapidly biodegradable components (once separated from the hull surface), or use non-biocidal alternatives, such as silicone coatings.

(h) To the greatest extent practicable, avoid use of antifouling hull coatings on vessels that are regularly removed from the water and unlikely to accumulate hull growth.

[85 FR 43476, July 17, 2020]

§ 1700.28 Motor gasoline and compensating discharge.

(a) The discharge of motor gasoline and compensating effluent must not contain oil in quantities that:

(1) Cause a film or sheen upon or discoloration of the surface of the water or adjoining shorelines; or

(2) Cause a sludge or emulsion to be deposited beneath the surface of the water or upon adjoining shorelines; or

(3) Contain an oil content above 15 ppm as measured by EPA Method 1664a (as defined at 40 CFR136.3) or other appropriate method for determination of oil content as accepted by the International Maritime Organization (IMO) (*e.g.*, ISO Method 9377) or U.S. Coast Guard; or

(4) Otherwise are harmful to the public health or welfare of the United States.

(b) The discharge of motor gasoline and compensating effluent must be minimized in port. If an oily sheen is observed, any spill or overflow of oil must be cleaned up, recorded, and reported to the National Response Center immediately.

(c) The discharge of motor gasoline and compensating effluent is prohibited in federally-protected waters.

[85 FR 43476, July 17, 2020]

§ 1700.29 Non-oily machinery wastewater.

The discharge of non-oily machinery wastewater must not contain any additives that are toxic or bioaccumulative in nature, and under no circumstances may oils, including oily mixtures, be discharged in quantities that:

(a) Cause a film or sheen upon or discoloration of the surface of the water or adjoining shorelines; or

(b) Cause a sludge or emulsion to be deposited beneath the surface of the water or upon adjoining shorelines; or

(c) Contain an oil content above 15 ppm as measured by EPA Method 1664a or other appropriate method for determination of oil content as accepted by the International Maritime Organization (IMO) (*e.g.*, ISO Method 9377) or U.S. Coast Guard; or

(d) Otherwise are harmful to the public health or welfare of the United States.

§ 1700.30 Photographic laboratory drains.

The discharge of photographic laboratory drains is prohibited.

§ 1700.31 Seawater cooling overboard discharge.

(a) For discharges from vessels that are less than 79 feet in length:

(1) To the greatest extent practicable, minimize non-contact engine cooling water, hydraulic system cooling water, refrigeration cooling water

and other seawater cooling overboard discharges when the vessel is in port.

(2) To reduce the production and discharge of seawater cooling overboard discharge, the vessel should use shore based power when in port if:

(i) Shore power is readily available for the vessel from utilities or port authorities; and

(ii) Shore based power supply systems are capable of providing all needed electricity required for vessel operations; and

(iii) The vessel is equipped to connect to shore-based power and such systems are compatible with the available shore power.

(3) Fouling organisms must be removed from seawater piping on a regular basis. The discharge of fouling organisms removed during cleanings is prohibited.

(b) For discharges from vessels that are greater than or equal to 79 feet in length:

(1) To the greatest extent practicable, minimize non-contact engine cooling water, hydraulic system cooling water, refrigeration cooling water and other seawater cooling overboard discharges when the vessel is in port.

(2) To reduce the production and discharge of seawater cooling overboard discharge, the vessel should use shore based power when in port if:

(i) Shore power is readily available for the vessel from utilities or port authorities; and

(ii) Shore based power supply systems are capable of providing all needed electricity required for vessel operations; and

(iii) The vessel is equipped to connect to shore-based power and such systems are compatible with the available shore power.

(3) Maintenance of all piping and seawater cooling systems must meet the requirements of § 1700.32 (Seawater Piping Biofouling Prevention). For all vessels, except submarines, fouling organisms removed during maintenance must not be discharged.

§ 1700.32 Seawater piping biofouling prevention.

(a) Seawater piping biofouling chemicals subject to registration under the Federal Insecticide, Fungicide, and Rodenticide Act (FIFRA) (7 U.S.C. 136 *et seq.*) must be used in accordance with the FIFRA label. Pesticides or chemicals banned for use in the United States must not be discharged.

(b) To the greatest extent practicable, only the minimum amount of biofouling chemicals must be used to keep fouling under control.

(c) Fouling organisms must be removed from seawater piping on a regular basis. For all vessels, except submarines, the discharge of fouling organisms removed during cleanings is prohibited.

§ 1700.33 Small boat engine wet exhaust.

(a) For the purposes of this section small boat engine wet exhaust discharges refers only to discharges from vessels that are less than 79 feet in length.

(b) Vessels generating small boat engine wet exhaust must be maintained in good operating order, well-tuned, and functioning according to manufacturer specifications, in order to decrease pollutant concentrations and volumes in small boat engine wet exhaust.

(c) To the greatest extent practicable, low sulfur or alternative fuels must be used to reduce the concentration of pollutants in discharges from small boat engine wet exhaust.

(d) To the greatest extent practicable, use four-stroke engines instead of two-stroke engines for vessels generating small boat engine wet exhaust.

(e) Vessels using two-stroke engines must use environmentally acceptable lubricants unless use of such lubricants is technologically infeasible. If technologically infeasible, the use and justification for the use of a non-environmentally acceptable lubricant must be recorded in the vessel recordkeeping documentation.

§ 1700.34 Sonar dome discharge.

(a) The water inside the sonar dome must not be discharged for maintenance activities unless the use of a drydock for the maintenance activity is not feasible.

(b) The water inside the sonar dome may be discharged for equalization of

pressure between the interior and exterior of the dome.

(c) A biofouling chemical that is bioaccumulative should not be applied to the exterior of a sonar dome when a non-bioaccumulative alternative is available.

[85 FR 43476, July 17, 2020]

§ 1700.35 Submarine bilgewater.

The discharge of submarine bilgewater:

(a) Must not contain oil in quantities that:

(1) Cause a film or sheen upon or discoloration of the surface of the water or adjoining shorelines; or

(2) Cause a sludge or emulsion to be deposited beneath the surface of the water or upon adjoining shorelines; or

(3) Contain an oil content above 15 parts per million (ppm) as measured by EPA Method 1664a (as defined at 40 CFR 136.3) or other appropriate method for determination of oil content as accepted by the International Maritime Organization (IMO) (*e.g.*, ISO Method 9377) or U.S. Coast Guard; or

(4) Otherwise are harmful to the public health or welfare of the United States.

(b) Must not contain dispersants, detergents, emulsifiers, chemicals, or other substances added for the purposes of removing the appearance of a visible sheen. This performance standard does not prohibit the use of these materials in machinery spaces for the purposes of cleaning and maintenance activities associated with vessel equipment and structures.

(c) Must only contain substances that are produced in the normal operation of a vessel. Oil solidifiers, flocculants or other additives (excluding any dispersants or surfactants) may be used to enhance oil-water separation during processing in an oil-water separator only if such solidifiers, flocculants, or other additives are minimized in the discharge and do not alter the chemical makeup of the oils being discharged. Solidifiers, flocculants, or other additives must not be directly added, or otherwise combined with, the water in the bilge. Additionally, the vessel must employ management practices that will minimize the leakage of oil and other harmful pollutants into the bilge.

(d) Must not occur in port if the port has the capability to collect and transfer the submarine bilgewater to an onshore facility.

(e) Must be minimized and, if technologically feasible, discharged as far from shore as possible.

(f) Must be minimized in federally-protected waters.

[85 FR 43477, July 17, 2020]

§ 1700.36 Surface vessel bilgewater/oil-water separator effluent.

(a) All surface vessels must employ management practices that will minimize leakage of oil and other harmful pollutants into the bilge.

(b) Surface vessels equipped with an oil-water separator must not discharge bilgewater and must only discharge oil-water separator effluent through an oil-content monitor consistent with paragraph (c) of this section. All surface vessels greater than 400 gross tons must be equipped with an oil-water separator. Surface vessels not equipped with an oil-water separator must only discharge bilgewater consistent with paragraph (d) of this section.

(c) The discharge of oil-water separator effluent:

(1) Must not contain oil in quantities that:

(i) Cause a film or sheen upon or discoloration of the surface of the water or adjoining shorelines; or

(ii) Cause a sludge or emulsion to be deposited beneath the surface of the water or upon adjoining shorelines; or

(iii) Contain an oil content above 15 ppm as measured by EPA Method 1664a (as defined at 40 CFR 136.3) or other appropriate method for determination of oil content as accepted by the International Maritime Organization (IMO) (*e.g.*, ISO Method 9377) or U.S. Coast Guard; or

(iv) Otherwise are harmful to the public health or welfare of the United States.

(2) Must not contain dispersants, detergents, emulsifiers, chemicals, or other substances added for the purposes of removing the appearance of a visible sheen. This performance standard does not prohibit the use of these materials in machinery spaces for the

purposes of cleaning and maintenance activities associated with vessel equipment and structures.

(3) Must only contain substances that are produced in the normal operation of a vessel. Oil solidifiers, flocculants or other additives (excluding any dispersants or surfactants) may be used to enhance oil-water separation during processing in an oil-water separator only if such solidifiers, flocculants, or other additives are minimized in the discharge and do not alter the chemical make-up of the oils being discharged. Solidifiers, flocculants, or other additives must not be directly added, or otherwise combined with, the water in the bilge.

(4) Must not occur in port if the vessel has the capability to collect and transfer oil-water separator effluent to an onshore facility.

(5) Must be minimized within one mile of shore.

(6) Must occur while sailing at speeds greater than six knots, if the vessel is underway.

(7) Must be minimized in federally-protected waters.

(d) The discharge of bilgewater (*i.e.*, wastewater from the bilge that has not been processed through an oil-water separator):

(1) Must not occur if the vessel has the capability to collect, hold, and transfer bilgewater to an onshore facility.

(2) Notwithstanding the prohibition of the discharge of bilgewater from vessels that have the capability to collect, hold, and transfer bilgewater to an onshore facility; the discharge of bilgewater:

(i) Must not contain dispersants, detergents, emulsifiers, chemicals, or other substances added for the purposes of removing the appearance of a visible sheen. This performance standard does not prohibit the use of these materials in machinery spaces for the purposes of cleaning and maintenance activities associated with vessel equipment and structures.

(ii) Must only contain substances that are produced in the normal operation of a vessel. Routine cleaning and maintenance activities associated with vessel equipment and structures are considered to be normal operation of a vessel.

(iii) Must not contain oil in quantities that:

(A) Cause a film or sheen upon or discoloration of the surface of the water or adjoining shorelines; or

(B) Cause a sludge or emulsion to be deposited beneath the surface of the water or upon adjoining shorelines; or

(C) Contain an oil content above 15 ppm as measured by EPA Method 1664a (as defined at 40CFR 136.3) or other appropriate method for determination of oil content as accepted by the International Maritime Organization (IMO) (*e.g.*, ISO Method 9377) or U.S. Coast Guard; or

(D) Otherwise are harmful to the public health or welfare of the United States.

(iv) Must be suspended immediately if a visible sheen is observed. Any spill or overflow of oil or other engine fluids must be cleaned up, recorded, and reported to the National Response Center immediately.

[85 FR 43477, July 17, 2020]

§ 1700.37 Underwater ship husbandry.

(a) For discharges from vessels that are less than 79 feet in length:

(1) To the greatest extent practicable, vessel hulls with an antifouling hull coating must not be cleaned within 90 days after the antifouling coating application.

(2) Vessel hulls must be inspected, maintained, and cleaned to minimize the removal and discharge of antifouling coatings and the transport of fouling organisms. To the greatest extent practicable, rigorous vessel hull cleanings must take place in drydock or at a land-based facility where the removed fouling organisms or spent antifouling coatings can be disposed of onshore in accordance with any applicable solid waste or hazardous substance management and disposal requirements.

(3) Prior to the transport of the vessel overland from one body of water to another, vessel hulls must be inspected for any visible attached living organisms. If fouling organisms are found, they must be removed and disposed of

onshore in accordance with any applicable solid waste and hazardous substance management and disposal requirements.

(4) Vessel hull cleanings must be conducted in a manner that minimizes the release of antifouling hull coatings and fouling organisms, including:

(i) Adhere to any applicable cleaning requirements found on the coatings' FIFRA label.

(ii) Use soft brushes or less abrasive cleaning techniques to the greatest extent practicable.

(iii) Use hard brushes only for the removal of hard growth.

(iv) Use a vacuum or other collection/control technology, when available and feasible. Residues filtered, precipitated, or otherwise removed by any vacuum technology must be disposed of onshore in accordance with any applicable solid waste and hazardous substance management and disposal requirements.

(b) For discharges from vessels that are greater than or equal to 79 feet in length:

(1) To the greatest extent practicable, vessel hulls with an antifouling hull coating must not be cleaned within 90 days after the antifouling coating application. To the greatest extent practicable, vessel hulls with copper-based antifouling coatings must not be cleaned within 365 days after coating application.

(2) Vessel hulls must be inspected, maintained, and cleaned to minimize the removal and discharge of antifouling coatings and the transport of fouling organisms. To the greatest extent practicable, rigorous vessel hull cleanings must take place in drydock or at a land-based facility where the removed fouling organisms or spent antifouling coatings can be disposed of onshore in accordance with any applicable solid waste or hazardous substance management and disposal requirements.

(3) Vessel hull cleanings must be conducted in a manner that minimizes the release of antifouling hull coatings and fouling organisms, including:

(i) Adhere to any applicable cleaning requirements found on the coatings' FIFRA label.

(ii) Use soft brushes or less abrasive cleaning techniques to the greatest extent practicable.

(iii) Use hard brushes only for the removal of hard growth.

(iv) Use a vacuum or other collection/control technology, when available and feasible. Residues filtered, precipitated, or otherwise removed by any vacuum technology must be disposed of onshore in accordance with any applicable solid waste and hazardous substance management and disposal requirements.

[85 FR 43477, July 17, 2020]

§ 1700.38 Welldeck discharges.

(a) Welldeck discharges that contain graywater from smaller vessels are prohibited.

(b) Welldeck discharges containing washdown from gas turbine engines are prohibited within three miles of the United States and to the greatest extent practicable must be discharged seaward of waters subject to UNDS.

(c) Welldeck discharges from equipment and vehicle washdowns must not contain garbage and must not contain oil in quantities that:

(1) Cause a film or sheen upon or discoloration of the surface of the water or adjoining shorelines; or

(2) Cause a sludge or emulsion to be deposited beneath the surface of the water or upon adjoining shorelines; or

(3) Contain an oil content above 15 ppm as measured by EPA Method 1664a or other appropriate method for determination of oil content as accepted by the International Maritime Organization (IMO) (*e.g.*, ISO Method 9377) or U.S. Coast Guard; or

(4) Otherwise are harmful to the public health or welfare of the United States.

§ 1700.39 Exceptions.

(a) Notwithstanding each of the MPCD performance standards established in this Part, a vessel of the Armed Forces is authorized to discharge, into waters subject to UNDS, when the PIC or their designated representative determines that such discharge is necessary to prevent loss of life, personal injury, vessel endangerment, or severe damage to the vessel.

(b) A vessel of the Armed Forces must maintain the following records for all discharges under paragraph (a) of this section:

(1) Name and title of the PIC who determined the necessity of the discharge;

(2) Date, location, and estimated volume of the discharge;

(3) Explanation of the reason the discharge occurred; and

(4) Actions taken to avoid, minimize, or otherwise mitigate the discharge.

(c) All records prepared under paragraph (b) of this section must be maintained in accordance with § 1700.41.

§ 1700.40 Commingling of discharges.

If two or more regulated discharge streams are combined into one, the resulting discharge stream must meet the requirements applicable to all discharge streams that are combined prior to discharge.

§ 1700.41 Records.

(a) All records must be generated and maintained in the ship's logs (main, engineering, and/or damage control) or an UNDS Record Book and must include the following information:

(1) Vessel owner information (*e.g.*, U.S. Navy, U.S. Coast Guard);

(2) Vessel name and class; and

(3) Name of the PIC.

(b) The PIC must maintain complete records of the following information:

(1) Any inspection or recordkeeping requirement as specified in §§ 1700.14 through 1700.38;

(2) Any instance of an exception and the associated recordkeeping requirements as specified in § 1700.39; and

(3) Any instance of non-compliance with any of the performance standards as specified in §§ 1700.14 through 1700.38. The information recorded must include the following:

(i) Description of any non-compliance and its cause;

(ii) Date of non-compliance;

(iii) Period of non-compliance (time and duration);

(iv) Location of the vessel during non-compliance;

(v) Corrective action taken;

(vi) Steps taken or planned to reduce, eliminate, and prevent non-compliance in the future; and

(vii) If the non-compliance has not been corrected, an estimate of the time the non-compliance is expected to continue.

(c) All records prepared under this section must be maintained for a period of five years from the date they are created. The information in this paragraph will be available to the EPA, states, or the U.S. Coast Guard upon request. Any information made available upon request must be appropriately classified, as applicable, and handled in accordance with applicable legal requirements regarding national security.

§ 1700.42 Non-compliance reports.

The PIC must report any non-compliance, including the information as required under § 1700.41, to the Armed Service's designated office in writing and/or electronically within five days of the time the PIC becomes aware of the circumstances.

PARTS 1701–1799 [RESERVED]

CHAPTER VIII—GULF COAST ECOSYSTEM RESTORATION COUNCIL

Part		*Page*
1800	Spill Impact Component	713
1801–1849	[Reserved]	
1850	Availability of records	716
1851–1899	[Reserved]	

PART 1800—SPILL IMPACT COMPONENT

Subpart A—Definitions

Sec.
1800.1 Definitions.

Subpart B—Minimum Allocation Available for Planning Purposes

1800.10 Purpose.
1800.20 Minimum allocation available for planning purposes.

Subpart C—Spill Impact Formula

1800.100 Purpose.
1800.101 General formula.
1800.200 Oiled shoreline.
1800.201 Miles of shoreline that experienced oiling as a result of the *Deepwater Horizon* oil spill.
1800.202 Proportionate number of miles of shoreline that experienced oiling as a result of the Deepwater Horizon oil spill.
1800.300 Inverse proportion of the average distance from Deepwater Horizon at the time of the explosion.
1800.301 Distances from the Deepwater Horizon at the time of the explosion.
1800.302 Inverse proportions.
1800.400 Coastal county populations.
1800.401 Decennial census data.
1800.402 Distribution based on average population.
1800.500 Allocation.

AUTHORITY: 33 U.S.C. 1321(t).

SOURCE: 80 FR 1586, Jan. 13, 2015, unless otherwise noted.

Subpart A—Definitions

§ 1800.1 Definitions.

As used in this part:

Deepwater Horizon oil spill means the blowout and explosion of the mobile offshore drilling unit *Deepwater Horizon* that occurred on April 20, 2010, and resulting hydrocarbon releases into the environment.

Gulf Coast State means any of the States of Alabama, Florida, Louisiana, Mississippi, and Texas.

Gulf Consortium means the consortium of Florida counties formed to develop the Florida State Expenditure Plan pursuant to 33 U.S.C. 1321(t)(3)(B)(iii)(II).

Inverse proportion means a mathematical relation between two quantities such that one proportionally increases as the other decreases.

Minimum allocation means the amount made available to each Gulf Coast State which totals at least five percent of the total allocation made available under the Spill Impact Component.

RESTORE Act means the Resources and Ecosystems Sustainability, Tourist Opportunities, and Revived Economies of the Gulf Coast States Act of 2012.

Spill Impact Component means the component of the Gulf RESTORE program authorized by section 311(t)(3) of the Federal Water Pollution Control Act (33 U.S.C. 1321(t)(3)), as added by section 1603 of the Act, in which Gulf Coast States are provided funds by the Council according to a formula that the Council establishes by regulation, using criteria listed in the Act.

Spill Impact Formula means the formula established by the Council in accordance with section 311(t)(3)(A)(ii) of the Federal Water Pollution Control Act, as added by section 1603 thereof.

State Expenditure Plan means the plan for expenditure of amounts disbursed under the Spill Impact Component that each Gulf Coast State must submit to the Council for approval.

Treasury means the U.S. Department of the Treasury, the Secretary of the Treasury, or his/her designee.

Trust Fund means the Gulf Coast Restoration Trust Fund.

[80 FR 1586, Jan. 13, 2015, as amended at 80 FR 77584, Dec. 15, 2015]

Subpart B—Minimum Allocation Available for Planning Purposes

§ 1800.10 Purpose.

This subpart establishes that up to the statutory minimum allocation (five percent) is available under the Spill Impact Component of the Resources and Ecosystems Sustainability, Tourist Opportunities, and Revived Economies of the Gulf Coast States Act of 2012 (RESTORE Act) (Pub. L. 112–141, 126 Stat. 405, 588–607) for planning purposes associated with development of a State Expenditure Plan.

§ 1800.20 Minimum allocation available for planning purposes.

A Gulf Coast State or its administrative agent, or the Gulf Consortium, may apply to the Council for a grant to use the minimum allocation available under the Spill Impact Component of the RESTORE Act for planning purposes. These planning purposes are limited to development of a State Expenditure Plan, and includes conceptual design and feasibility studies related to specific projects. It does not include engineering and environmental studies related to specific projects. It also does not include any pre-award costs incurred prior to August 22, 2014.

Subpart C—Spill Impact Formula

SOURCE: 80 FR 77584, Dec. 15, 2015, unless otherwise noted.

§ 1800.100 Purpose.

This subpart establishes the formula applicable to the Spill Impact Component authorized under the RESTORE Act (Pub. L. 112–141, 126 Stat. 405, 588–607).

§ 1800.101 General formula.

The RESTORE Act provides that thirty percent (30%) of the funds made available from the Trust Fund for the Oil Spill Impact Component be disbursed to each of the Gulf Coast States of Alabama, Florida, Louisiana, Mississippi and Texas based on a formula established by the Council (Spill Impact Formula), through a regulation, that is based on a weighted average of the following criteria:

(a) Forty percent (40%) based on the proportionate number of miles of shoreline in each Gulf Coast State that experienced oiling on or before April 10, 2011, compared to the total number of miles of shoreline that experienced oiling as a result of the Deepwater Horizon oil spill;

(b) Forty percent (40%) based on the inverse proportion of the average distance from the mobile offshore drilling unit Deepwater Horizon at the time of the explosion to the nearest and farthest point of the shoreline that experienced oiling of each Gulf Coast State; and

(c) Twenty percent (20%) based on the average population in the 2010 Decennial Census of coastal counties bordering the Gulf of Mexico within each Gulf Coast State.

§ 1800.200 Oiled shoreline.

Solely for the purpose of calculating the Spill Impact Formula, the following shall apply, rounded to one decimal place with respect to miles of shoreline:

§ 1800.201 Miles of shoreline that experienced oiling as a result of the Deepwater Horizon oil spill.

According to Shoreline Cleanup and Assessment Technique and Rapid Assessment Technique data provided by the United States Coast Guard, the miles of shoreline that experienced oiling on or before April 10, 2011 for each Gulf Coast State are:

(a) Alabama—89.8 miles.
(b) Florida—174.6 miles.
(c) Louisiana—658.3 miles.
(d) Mississippi—158.6 miles.
(e) Texas—36.0 miles.

§ 1800.202 Proportionate number of miles of shoreline that experienced oiling as a result of the Deepwater Horizon oil spill.

The proportionate number of miles for each Gulf Coast State is determined by dividing each Gulf Coast State's number of miles of oiled shoreline determined in § 1800.201 by the total number of affected miles. This calculation yields the following:

(a) Alabama—8.04%.
(b) Florida—15.63%.
(c) Louisiana—58.92%.
(d) Mississippi—14.19%.
(e) Texas—3.22%.

§ 1800.300 Inverse proportion of the average distance from Deepwater Horizon at the time of the explosion.

Solely for the purpose of calculating the Spill Impact Formula, the following shall apply, rounded to one decimal place with respect to distance:

§ 1800.301 Distances from the Deepwater Horizon at the time of the explosion.

(a) Alabama—The distance from the nearest point of the Alabama shoreline

that experienced oiling from the Deepwater Horizon oil spill was 89.2 miles. The distance from the farthest point of the Alabama shoreline that experienced oiling from the Deepwater Horizon oil spill was 103.7 miles. The average of these two distances is 96.5 miles.

(b) Florida—The distance from the nearest point of the Florida shoreline that experienced oiling from the Deepwater Horizon oil spill was 102.3 miles. The distance from the farthest point of the Florida shoreline that experienced oiling from the Deepwater Horizon oil spill was 207.6 miles. The average of these two distances is 154.9 miles.

(c) Louisiana—The distance from the nearest point of the Louisiana shoreline that experienced oiling from the Deepwater Horizon oil spill was 43.5 miles. The distance from the farthest point of the Louisiana shoreline that experienced oiling from the Deepwater Horizon oil spill was 213.7 miles. The average of these two distances is 128.6 miles.

(d) Mississippi—The distance from the nearest point of the Mississippi shoreline that experienced oiling from the Deepwater Horizon oil spill was 87.7 miles. The distance from the farthest point of the Mississippi shoreline that experienced oiling from the Deepwater Horizon oil spill was 107.9 miles. The average of these two distances is 97.8 miles.

(e) Texas—The distance from the nearest point of the Texas shoreline that experienced oiling from the Deepwater Horizon oil spill was 306.2 miles. The distance from the farthest point of the Texas shoreline that experienced oiling from the Deepwater Horizon oil spill was 356.5 miles. The average of these two distances is 331.3 miles.

§ 1800.302 Inverse proportions.

The inverse proportion for each Gulf Coast State is determined by summing the proportional average distances determined in § 1800.301 and taking the inverse. This calculation yields the following:

(a) Alabama—27.39%.

(b) Florida—17.06%.

(c) Louisiana—20.55%.

(d) Mississippi—27.02%.

(e) Texas—7.98%.

§ 1800.400 Coastal county populations.

Solely for the purpose of calculating the Spill Impact Formula, the coastal counties bordering the Gulf of Mexico within each Gulf Coast State are:

(a) The Alabama Coastal Counties, consisting of Baldwin and Mobile counties;

(b) The Florida Coastal Counties, consisting of Bay, Charlotte, Citrus, Collier, Dixie, Escambia, Franklin, Gulf, Hernando, Hillsborough, Jefferson, Lee, Levy, Manatee, Monroe, Okaloosa, Pasco, Pinellas, Santa Rosa, Sarasota, Taylor, Wakulla, and Walton counties;

(c) The Louisiana Coastal Parishes, consisting of Cameron, Iberia, Jefferson, Lafourche, Orleans, Plaquemines, St. Bernard, St. Mary, St. Tammany, Terrebonne, and Vermilion parishes;

(d) The Mississippi Coastal Counties, consisting of Hancock, Harrison, and Jackson counties; and

(e) The Texas Coastal Counties, consisting of Aransas, Brazoria, Calhoun, Cameron, Chambers, Galveston, Jefferson, Kennedy, Kleberg, Matagorda, Nueces, and Willacy counties.

§ 1800.401 Decennial census data.

The average populations in the 2010 decennial census for each Gulf Coast State, rounded to the nearest whole number, are:

(a) For the Alabama Coastal Counties, 297,629 persons;

(b) For the Florida Coastal Counties, 252,459 persons;

(c) For the Louisiana Coastal Parishes, 133,633 persons;

(d) For the Mississippi Coastal Counties,123,567 persons; and

(e) For the Texas Coastal Counties, 147,845 persons.

§ 1800.402 Distribution based on average population.

The distribution of funds based on average populations for each Gulf Coast State is determined by dividing the average population determined in § 1800.401 by the sum of those average populations. This calculation yields the following results:

(a) Alabama—31.16%.

(b) Florida—26.43%.

(c) Louisiana—13.99%.

(d) Mississippi—12.94%.

(e) Texas—15.48%.

§ 1800.500 Allocation.

Using the data from §§ 1800.200 through 1800.402 of this subpart in the formula provided in § 1800.101 of this subpart yields the following allocation for each Gulf Coast State:

(a) Alabama—20.40%.
(b) Florida—18.36%.
(c) Louisiana—34.59%.
(d) Mississippi—19.07%.
(e) Texas—7.58%.

PARTS 1801–1849 [RESERVED]

PART 1850—AVAILABILITY OF RECORDS

Subpart A—Production or Disclosure Under the Freedom of Information Act

Sec.
1850.1 Purpose and scope.
1850.2 Definitions.
1850.3 General provisions.
1850.4 Public reading room.
1850.5 Requirements for making requests.
1850.6 Responding to requests.
1850.7 Appeals.
1850.8 Authority to determine.
1850.9 Maintenance of files.
1850.10 Fees.
1850.11 Requests for confidential treatment of business information.
1850.12 Requests for access to confidential commercial or financial information.
1850.13 Classified information.

Subpart B—Production or Disclosure Under the Privacy Act

1850.31 Purpose and scope.
1850.32 Definitions.
1850.33 Procedures for requests pertaining to individual records in a record system.
1850.34 Times, places, and requirements for identification of individuals making requests.
1850.35 Disclosure of requested information to individuals.
1850.36 Special procedures: Medical records.
1850.37 Request for correction or amendment to record.
1850.38 Council review of request for correction or amendment to record.
1850.39 Appeal of initial adverse agency determination on correction or amendment.
1850.40 Disclosure of record to person other than the individual to whom it pertains.
1850.41 Fees.
1850.42 Penalties.

AUTHORITY: 33 U.S.C. 1321(t); 5 U.S.C. 552; 5 U.S.C. 552a.

SOURCE: 80 FR 29451, May 22, 2015, unless otherwise noted.

Subpart A—Production or Disclosure Under the Freedom of Information Act

§ 1850.1 Purpose and scope.

This subpart contains the regulations of the Gulf Coast Ecosystem Restoration Council (Council) implementing the Freedom of Information Act (FOIA) (5 U.S.C. 552), as amended. These regulations supplement the FOIA, which provides more detail regarding requesters' rights and the records the Council may release.

The regulations of this subpart provide information concerning the procedures by which records may be obtained from the Council. Official records of the Council made available pursuant to the requirements of the FOIA shall be furnished to members of the public only as prescribed by this subpart. Information routinely provided to the public as part of a regular Council activity (for example, press releases) may be provided to the public without following this subpart.

The FOIA applies to third-party requests for documents concerning the general activities of the Government, and of the Council in particular. When a U.S. citizen or an individual lawfully admitted for permanent residence requests access to his or her own records, he/she is making a first-person Privacy Act request, not a FOIA request, subject to subpart B of these rules. The Council maintains records about individuals under the individual's name or personal identifier. Although the Council determines whether a request is a FOIA request or a Privacy Act request, the Council processes requests in accordance with both laws. This provides the greatest degree of lawful access to requesters while safeguarding individuals' personal privacy.

§ 1850.2 Definitions.

(a) *Commercial Use Request* means a request from or on behalf of one who seeks information for a use or purpose that furthers the commercial, trade, or profit interests of the requester or the

person on whose behalf the request is made.

(b) *Confidential Commercial Information* means commercial or financial information, obtained by the Council from a submitter, that may contain information exempt from release under Exemption 4 of FOIA, 5 U.S.C. 552(b)(4).

(c) *Council* means to the Gulf Coast Ecosystem Restoration Council.

(d) *Days*, unless stated as ''calendar days,'' are business days and do not include Saturday, Sunday, or federal holidays.

(e) *Direct costs* means those expenses the Council actually incurs in searching for and duplicating (and, in the case of commercial requesters, reviewing) documents in response to a request made under §1850.5. Direct costs include, for example, the labor costs of the employee performing the work (the basic rate of pay for the employee, plus 16 percent of that rate to cover benefits) and the cost of operating duplicating machinery. Not included in direct costs are overhead expenses such as costs of space and heating or lighting of the facility in which the documents are stored.

(f) *Duplication* means the making a copy of a document, or other information contained in it, necessary to respond to a FOIA request. Copies may take the form of paper, microfilm, audio-visual materials, or electronic records, among others. The Council shall honor a requester's specified preference of form or format of disclosure if the record is readily reproducible with reasonable efforts in the requested form or format.

(g) *Educational institution* means a preschool, a public or private elementary or secondary school, or an institution of undergraduate higher education, graduate higher education, professional education, or an institution of vocational education that operates a program of scholarly research.

(h) *Fee category* means one of the three categories that agencies place requesters in for the purpose of determining whether a requester will be charged fees for search, review and duplication. The three fee categories are:

(1) Commercial requesters;

(2) Non-commercial scientific or educational institutions or news media requesters; and

(3) All other requesters.

(i) *Fee waiver* means the waiver or reduction of processing fees if a requester can demonstrate that certain statutory standards are satisfied, including that the information is in the public interest and is not requested for a commercial interest.

(j) *FOIA Public Liaison* means an agency official who is responsible for assisting in reducing delays, increasing transparency and understanding of the status of requests, and assisting in the resolution of disputes.

(k) *News* means information about current events or that would be of current interest to the public.

(l) *Noncommercial scientific institution* means an institution that is not operated on a ''commercial'' basis (as that term is used in this section) and which is operated solely for the purpose of conducting scientific research, the results of which are not intended to promote any particular product or industry.

(m) *Perfected request* means a written FOIA request that meets all of the criteria set forth in §1850.5.

(n) *Reading room* means a location where records are available for review pursuant to 5 U.S.C. 552(a)(2).

(o) *Records* under the FOIA include all Government records, regardless of format, medium or physical characteristics, and electronic records and information, audiotapes, videotapes, Compact Disks, DVDs, and photographs.

(p) *Records Management Officer* means the person designated by the Executive Director of the Council to oversee all aspects of the Council's records management program, including FOIA.

(q) *Representative of the news media, or news media requester*, means any person or entity organized and operated to publish or broadcast news to the public that actively gathers information of potential interest to a segment of the public, uses its editorial skills to turn the raw materials into a distinct work, and distributes the work to an audience. Examples of news-media entities are television or radio stations broadcasting to the public at large, and publishers of periodicals that disseminate

''news'' and make their products available through a variety of means to the general public including news organizations that disseminate solely on the Internet. To be in this category, a requester must not be seeking the requested records for a commercial use. A request for records that supports the news-dissemination function of the requester shall not be considered to be for a commercial use. A ''freelance journalist'' shall be regarded as working for a news-media entity if the journalist can demonstrate a solid basis for expecting publication through that entity, whether or not the journalist is actually employed by the entity. A publication contract would be the clearest proof, but the Council shall also look to the past publication record of a requester in making this determination. The Council's decision to grant a requester media status will be made on a case-by-case basis based upon the requester's intended use of the material.

(r) *Requester* means any person, partnership, corporation, association, or foreign or State or local government, which has made a request to access a Council record under FOIA.

(s) *Requester category* means one of the three categories in which agencies place requesters to determine whether the agency will charge a requester fees for search, review, and duplication. The categories include commercial requesters, non-commercial scientific or educational institutions or news media requesters, and all other requesters.

(t) *Review* means the examination of a record located in response to a request in order to determine whether any portion of it is exempt from disclosure. Review time includes processing any record for disclosure, such as doing all that is necessary to prepare the record for disclosure, including the process of redacting it and marking any applicable exemptions. Review costs are recoverable even if a record ultimately is not disclosed. Review time includes time spent obtaining and considering any formal objection to disclosure made by a business submitter under § 1850.12 but does not include time spent resolving general legal or policy issues regarding the application of exemptions.

(u) *Search* means the process of looking for and retrieving documents or information that is responsive to a request. Search time includes page-by-page or line-by-line identification of information within documents and also includes reasonable efforts to locate and retrieve information from records maintained in electronic form or format.

(v) *Submitter* means any person or entity from whom the Council obtains confidential commercial information, directly or indirectly.

(w) *Unusual circumstances* include situations in which the Council must:

(1) Search for and collect the requested agency records from field facilities or other establishments that are separate from the office processing the request;

(2) Search for, collect, and appropriately examine a voluminous amount of separate and distinct records that are the subject of a single request; or

(3) Consult with another Federal agency having a substantial interest in the determination of the FOIA request.

§ 1850.3 General provisions.

The Council shall prepare an annual report to the Attorney General of the United States regarding its FOIA activities in accordance with 5 U.S.C. 552(e).

§ 1850.4 Public reading room.

The Council maintains an electronic public reading room on its Web site, *http://www.restorethegulf.gov*, which contains the records FOIA requires the Council to make available for public inspection and copying, as well as additional records of interest to the public.

§ 1850.5 Requirements for making requests.

(a) *Type of records made available.* The Council shall make available upon request, pursuant to the procedures in this section and subject to the exceptions set forth in FOIA, all records of the Council that are not available under § 1850.4. The Council's policy is to make discretionary disclosures of records or information otherwise exempt from disclosure under FOIA unless the Council reasonably foresees

that such disclosure would harm an interest protected by one or more FOIA exemptions, or otherwise prohibited by law. This policy does not create any enforceable right in court.

(b) *Procedures for requesting records.* A request for records shall reasonably describe the records in a way that enables Council staff to identify and produce the records with reasonable effort. The requester should include as much specific information as possible regarding dates, titles, and names of individuals. In cases where the request requires production of voluminous records, or is not reasonably described, a Council representative may suggest the requester, or the individual acting on the requester's behalf, to verify the scope of the request and, if possible, narrow the request. Once narrowed, the Council will process the request. All requests must be submitted in writing (including by email, fax or mail) to the Council's Records Management Officer. Requesters shall clearly mark a request as a ''Freedom of Information Act Request'' or ''FOIA Request'' on the front of the envelope or in the subject line of the email.

(c) *Contents of request.* The request, at minimum, shall contain the following information:

(1) The name, telephone number, and non-electronic address of the requester;

(2) Whether the requested information is intended for commercial use, or whether the requester represents an education or noncommercial scientific institution, or news media; and

(3) A statement agreeing to pay the applicable fees, identifying any fee limitation desired, or requesting a waiver or reduction of fees that satisfies § 1850.10(j)(1) to (3).

(d) *Perfected requests.* The requester must meet all the requirements in this section to perfect a request. The Council will only process perfected requests.

(e) *Requests by an individual for Council records pertaining to that individual.* An individual who wishes to inspect or obtain copies of Council records that pertain to that individual must file a request in accordance with subpart B of this part.

(f) *Requests for Council records pertaining to another individual.* Where a request for records pertains to a third party, a requester may receive greater access by submitting a notarized authorization signed by that individual or a declaration by that individual made in compliance with the requirements set forth in 28 U.S.C. 1746, authorizing disclosure of the records to the requester, or by submitting proof the individual is deceased (*e.g.* a copy of the death certificate or an obituary). The Council may require a requester to supply additional information if necessary to verify that a particular individual has consented to disclosure.

(g) Requesters may submit a request for records, expedited processing or waiver of fees by writing directly to the Records Management Officer via email at *FOIArequest@restorethegulf.gov*, or first class United States mail at 500 Poydras Street, Suite 1117, New Orleans, LA 70130.

(h) Any Council officer or employee who receives a written Freedom of Information Act request shall promptly forward it to the Records Management Officer. Any Council officer or employee who receives an oral request under the Freedom of Information Act shall inform the person making the request that it must be in writing and also inform such person of the provisions of this subpart.

§ 1850.6 Responding to requests.

(a) *Receipt and processing.* The date of receipt for any request, including one that is addressed incorrectly or that is referred to the Council by another agency, is the date the Council actually receives the request. The Council normally will process requests in the order they are received. However, in the Records Management Officer's discretion, the Council may use two or more processing tracks by distinguishing between simple and more complex requests based on the number of pages involved, or some other measure of the amount of work and/or time needed to process the request, and whether the request qualifies for expedited processing as defined by paragraph (d) of this section. When using multi-track processing, the Records Management Officer may provide requesters in the complex track(s) with an opportunity to limit the scope of

their requests to qualify for the simple track and faster processing.

(b) *Authorization.* The Records Management Officer and other persons designated by the Council's Executive Director are solely authorized to grant or deny any request for Council records.

(c) *Timing.* (1) When a requester submits a request in accordance with §1850.5, the Records Management Officer shall inform the requester of the determination concerning that request within 20 days from receipt of the request, unless ''unusual circumstances'' exist, as defined in §1850.2(w). The Records Management Officer also shall provide requesters with a unique tracking number, an estimated date of completion (once the request is perfected), and a fee estimate (when applicable). The Records Management Officer shall also include in the Council's acknowledgment letter a brief description of the subject of the request.

(2) When additional time is required as a result of ''unusual circumstances,'' as defined in §1850.2(w), the Records Management Officer shall, within the statutory 20 day period, issue to the requester a brief written statement of the reason for the delay and an indication of the date on which it is expected that a determination as to disclosure will be forthcoming. If more than 10 additional days are needed, the requester shall be notified and provided an opportunity to limit the scope of the request or to arrange for an alternate time frame for processing the request.

(3) The Council may toll the statutory time period to issue its determination on a FOIA request one time during the processing of the request to obtain clarification from the requester. The statutory time period to issue the determination on disclosure is tolled until the Council receives the information reasonably requested from the requester. The Council may also toll the statutory time period to issue the determination to clarify with the requester issues regarding fees. There is no limit on the number of times the agency may request clarifying fee information from the requester.

(d) *Expedited processing.* (1) A requester may request expedited processing by submitting a statement, certified to be true and correct to the best of that person's knowledge and belief, that demonstrates a compelling need for records, as defined in 5 U.S.C. 552(a)(6)(E)(v).

(2) The Records Management Officer will notify a requester of the determination to grant or deny a request for expedited processing within ten days of receipt of the request. If the Records Management Officer grants the request for expedited processing, the Council staff shall process the request as soon as practicable subject to §1850.10(d) and (e). If the Records Management Officer denies the request for expedited processing, the requester may file an appeal in accordance with the process described in §1850.7.

(3) The Council staff will give expedited treatment to a request when the Records Management Officer determines the requester has established one of the following:

(i) Circumstances in which the lack of expedited treatment reasonably could be expected to pose an imminent threat to the life or physical safety of an individual;

(ii) An urgency to inform the public about an actual or alleged Federal Government activity, if made by an individual primarily engaged in disseminating information;

(iii) The loss of substantial due process rights;

(iv) A matter of widespread and exceptional media interest raising possible questions about the Federal government's integrity which affects public confidence; or

(4) These procedures for expedited processing also apply to requests for expedited processing of administrative appeals.

(e) *Denials.* If the Records Management Officer denies the request in whole or part, the Records Management Officer will inform the requester in writing and include the following:

(1) A brief statement of the reason(s) for the denial, including applicable FOIA exemption(s) and a description of those exemptions;

(2) An estimate of the volume of records or information withheld;

(3) If technically feasible, the precise amount of information deleted at the place in the record where the deletion was made, and the exemption under

which a deletion is made on the released portion of the record, unless including that information would harm an interest protected by the exemption;

(4) The name and title or position of the person responsible for the denial of the request;

(5) The requester's right to appeal any such denial and the title and address of the official to whom such appeal is to be addressed; and

(6) The requirement that the appeal be received within 45 days of the date of the denial.

(f) *Referrals to another agency.* (1) When the Council receives a request for a record (or a portion thereof) in its possession that originated with another Federal agency subject to the FOIA, the Council shall, except as provided in paragraph (f)(4) of this section, refer the record to that agency for direct response to the requester. However, if the Council and the originating agency jointly agree that the Council is in the best position to respond regarding the record, then the record may be handled as a consultation.

(2) Whenever the Council refers any part of the responsibility for responding to a request to another agency, it shall document the referral, maintain a copy of the record that it refers, and notify the requester of the referral and inform the requester of the name of the agency to which the record was referred, including that agency's FOIA contact information.

(3) The Council's response to an appeal will advise the requester that the 2007 FOIA amendments created the Office of Government Information Services (OGIS) to offer mediation services to resolve disputes between FOIA requesters and Federal agencies as a nonexclusive alternative to litigation. A requester may contact OGIS in any of the following ways: Office of Government Information Services, National Archives and Records Administration, 8601 Adelphi Road—OGIS, College Park, MD 20740, *ogis.archives.gov*, Email: *ogis@nara.gov*, Telephone: 202–741–5770, Facsimile: 202–741–5769, Toll-free: 1–877–684–6448.

(4) The referral procedure is not appropriate where disclosure of the identity of the agency, typically a law enforcement agency or Intelligence Community agency, to which the referral would be made could harm an interest protected by an applicable exemption, such as the exemptions that protect personal privacy and national security interests. In such instances, in order to avoid harm to an interest protected by an applicable exemption, the Council shall coordinate with the originating agency to seek its views on the disclosability of the record. The release determination for the record that is the subject of the coordination shall then be conveyed to the requester by the Council.

(g) *Consulting with another agency.* In instances where a record is requested that originated with the Council and another agency has a significant interest in the record (or a portion thereof), the Council shall consult with that agency before responding to a requester. When the Council receives a request for a record (or a portion thereof) in its possession that originated with another agency that is not subject to the FOIA, the Council shall consult with that agency before responding to the requester.

(h) *Providing responsive records.* (1) Council staff shall send a copy of records or portions of records responsive to the request to the requester by regular United States mail to the address indicated in the request or by email to the email address provided by the requester, unless the requester makes other acceptable arrangements or the Council deems it appropriate to send the records by other means. The Council shall provide a copy of the record in any form or format requested if the record is readily reproducible in that form or format. The Council need not provide more than one copy of any record to a requester.

(2) The Records Management Officer shall provide any reasonably segregable portion of a record that is responsive to the request after redacting those portions that are exempt under FOIA or this section.

(3) The Council is not required to create, compile, prepare or obtain from outside the Council a record to satisfy a request. Retrieving data from a Council database or running a report from a database is permissible.

(i) *Prohibition against disclosure.* Except as provided in this subpart, no member or employee of the Council shall disclose or permit the disclosure of any non-public information of the Council to any person (other than Council members, employees, or agents properly entitled to such information for the performance of their official duties), unless required by law to do so.

§ 1850.7 Appeals.

(a) Requesters may administratively appeal an adverse determination regarding a request by writing directly to the General Counsel via email at *GeneralCounsel@restorethegulf.gov* or first class United States mail at 500 Poydras Street, Suite 1117, New Orleans, LA 70130. Administrative appeals sent to other individuals or addresses are not considered perfected. An adverse determination is a denial of a request and includes decisions that: The requested record is exempt, in whole or in part; the information requested is not a record subject to the FOIA; the requested record does not exist, cannot be located, or has previously been destroyed; or the requested record is not readily reproducible in the form or format sought by the requester. Adverse determinations also include denials involving fees or fee waiver matters or denials of requests for expedited processing.

(b) FOIA administrative appeals must be in writing and should contain the phrase ''FOIA Appeal'' on the front of the envelope or in the subject line of the electronic mail.

(c) Appellants are encouraged to include a copy of the original request and the initial denial (if any) in the appeal. The appeal letter may include as much or as little related information as the appellant wishes, as long as it clearly identifies the component determination (including the assigned request number, if known) that is being appealed.

(d) Requesters submitting an administrative appeal of an adverse determination must ensure that the Council receives the appeal within 45 days of the date of the denial letter.

(e) Upon receipt of an administrative appeal, Council staff shall inform the requester within 20 days of the determination on that appeal.

(f) The determination on an appeal shall be in writing and, when it denies the appeal, in whole or in part, the letter to the requester shall include:

(1) A brief explanation of the basis for the denial, including a list of the applicable FOIA exemptions and a description of how they apply;

(2) A statement that the decision is final for the Council;

(3) Notification that judicial review of the denial is available in the district court of the United States in the district in which the requester resides, or has his or her principal place of business, or in which the agency records are located, or in the District of Columbia; and

(4) The name and title or position of the official responsible for denying the appeal.

§ 1850.8 Authority to determine.

The Records Management Officer or Council Executive Director, when receiving a request pursuant to these regulations, shall grant or deny such request. That decision shall be final, subject only to administrative appeal as provided in § 1850.7. The Council General Counsel shall deny or grant an administrative appeal requested under § 1850.7.

§ 1850.9 Maintenance of files.

The Records Management Officer shall maintain files containing all material required to be retained by or furnished to them under this subpart. The Council shall preserve all correspondence pertaining to the FOIA requests that it receives, as well as copies of all requested records, until a General Records Schedule (GRS) published by the National Archives and Records Administration (NARA) or another NARA-approved records schedule authorizes the office to dispose of or destroy the records. All materials identified as responsive to a FOIA request will be retained while the request or a related appeal or lawsuit is pending even otherwise authorized for disposal or destruction under a GRS or other NARA-approved records schedule. The material shall be filed by a unique tracking number.

§ 1850.10 Fees.

(a) *Generally*. Except as provided elsewhere in this section, the Records Management Officer shall assess fees where applicable in accordance with this section for search, review, and duplication of records requested. The Records Management Officer shall also have authority to furnish documents without any charge or at a reduced charge if disclosure of the information is in the public interest because it is likely to contribute significantly to public understanding of the operations or activities of the government and is not primarily in the commercial interest of the requester.

(b)(1) *Fee schedule; waiver of fees*. The fees applicable to a request for Council records pursuant to § 1850.5 are set forth in the following uniform fee schedule:

Service	Rate
(i) Manual search	Actual salary rate of employee involved, plus 16 percent of salary rate to cover benefits.
(ii) Computerized search	Actual direct cost, including operator time.
(iii) Duplication of records:	
(A) Paper copy reproduction	$0.05 per page.
(B) Other reproduction (*e.g.,* computer disk or printout, microfilm, microfiche, or microform).	Actual direct cost, including operator time.
(iv) Review of records (including redaction)	Actual salary rate of employee involved, plus 16 percent of salary rate to cover benefits.

(2) *Search*. (i) The Council shall charge search fees for all requests, subject to the limitations of paragraph (b)(5) of this section. The Records Management Officer shall charge for time spent searching for responsive records, even if no responsive record is located or if the Records Management Officer withholds records located as entirely exempt from disclosure. Search fees shall equal the direct costs of conducting the search by the Council employee involved, plus 16 percent of the salary rate to cover benefits.

(ii) For computer searches of records, the Council will charge requesters the direct costs of conducting the search. In accordance with paragraph (f) of this section, however, the Council will charge certain requesters no search fee and certain other requesters are entitled to the cost equivalent of two hours of manual search time without charge. These direct costs include the costs attributable to the salary of an operator/programmer performing a computer search.

(3) *Duplication*. The Council will charge duplication fees to all requesters, subject to the limitations of paragraph (b)(5) of this section. The fee for a paper photocopy of a record (no more than one copy of which need be supplied) is 5 cents per page. The Records Management Officer will charge the requester for the direct costs, including operator time, of making copies produced by computer, such as tapes or printouts. The Records Management Officer will charge a requester the direct costs of providing other forms of duplication.

(4) *Review*. The Council will charge review fees to requesters who make a commercial use request. Review fees generally are limited to the initial record review, *i.e.*, the review done when the Records Management Officer determines whether an exemption applies to a particular record at the initial request level. The Council will not charge a requester for additional review at the administrative appeal level. Review fees consist of the direct costs of conducting the review by the Council employee involved, plus 16 percent of the salary rate to cover benefits.

(5) *Limitations on charging fees*. (i) The Council will not charge a search fee for requests from educational institutions, noncommercial scientific institutions, or representatives of the news media.

(ii) The Council will not charge a search fee or review fee for a quarter-hour period unless more than half of that period is required for search or review.

(iii) The Council will not charge a fee to a requester whenever the total fee calculated under this paragraph is $25 or less for the request.

(iv) Except for requesters seeking records for a commercial use, the Council will provide without charge the first 100 pages of duplication (or the cost equivalent) and the first two hours of search.

(v) The provisions of paragraphs (b)(5)(iii) and (iv) of this section work together. This means that for requesters other than those seeking records for a commercial use, no fee shall be charged unless the cost of search is in excess of two hours plus the cost of duplication in excess of 100 pages totals more than $25.

(vi) No search fees shall be charged to a requester when the Council does not comply with the statutory time limits at 5 U.S.C. 552(a)(6) in which to respond to a request, unless unusual or exceptional circumstances (as those terms are defined by the FOIA) apply to the processing of the request.

(vii) No duplication fees shall be charged to requesters in the fee category of a representative of the news media or an educational or noncommercial scientific institution when the Council does not comply with the statutory time limits at 5 U.S.C. 552(a)(6) in which to respond to a request, unless unusual or exceptional circumstances (as those terms are defined by the FOIA) apply to the processing of the request.

(c) *Payment procedures.* All requesters shall pay the applicable fee before the Council sends copies of the requested records, unless the Records Management Official grants a fee waiver. Requesters must pay fees by check or money order made payable to the ''Treasury of the United States.'' Checks and money orders should be mailed to 500 Poydras Street, Suite 1117, New Orleans, LA 70130.

(d) *Advance notification of fees.* If the estimated charges exceed $25, the Records Management Officer shall notify the requester of the estimated amount, unless the requester has indicated a willingness to pay fees as high as those anticipated. Upon receipt of such notice, the requester may confer with the Records Management Officer to reformulate the request to lower the costs. Council staff shall suspend processing the request until the requester provides the Records Management Officer with a written guarantee that the requester will make payment upon completion of processing (*i.e.*, upon completion of the search, review and duplication, but prior the Council sending copies of the requested records to the requester).

(e) *Advance payment.* The Records Management Officer shall require advance payment of any fee estimated to exceed $250. The Records Management Officer also shall require full payment in advance where a requester has previously failed to pay a fee in a timely fashion. If an advance payment of an estimated fee exceeds the actual total fee by $1 or more, the Council shall refund the difference to the requester. The Council shall suspend the processing of the request and the statutory time period for responding to the request until the Records Management Officer receives the required payment.

(f) *Categories of uses.* The fees assessed depend upon the fee category. In determining which category is appropriate, the Records Management Officer shall look to the identity of the requester and the intended use set forth in the request for records. Where a requester's description of the use is insufficient to make a determination, the Records Management Officer may seek additional clarification before categorizing the request.

(1) *Commercial use requester:* The fees for search, duplication, and review apply.

(2) *Educational institutions, non-commercial scientific institutions, or representatives of the news media requesters:* The fees for duplication apply. The Council will provide the first 100 pages of duplication free of charge.

(3) *All other requesters:* The fees for search and duplication apply. The Council will provide the first two hours of search time and the first 100 pages of duplication free of charge.

Category	Chargeable fees
(i) Commercial Use Requesters	Search, Review, and Duplication.
(ii) Education and Non-commercial Scientific Institution Requesters.	Duplication (excluding the cost of the first 100 pages).

Category	Chargeable fees
(iii) Representatives of the News Media	Duplication (excluding the cost of the first 100 pages).
(iv) All Other Requesters	Search and Duplication (excluding the cost of the first 2 hours of search and first 100 pages of duplication).

(g) *Nonproductive search.* The Council may charge fees for search even if no responsive documents are found.

(h) *Interest charges.* The Records Management Officer may assess interest charges on any unpaid bill starting on the 31st calendar day following the date the Council sent the bill to the requester. The Council will charge interest at the rate prescribed in 31 U.S.C. 3717 on fees payable in accordance with this section. The Council will follow the provisions of the Debt Collection Act of 1982 (Pub. L. 97–365, 96 Stat. 1749), as amended, and its administrative procedures, including the use of consumer reporting agencies, collection agencies, and offset.

(i) *Aggregated requests.* A requester may not file multiple requests at the same time solely in order to avoid payment of fees. If the Council reasonably believes that a request, or a group of requesters acting in concert, is attempting to break down a request into a series of requests for the purpose of evading the assessment of fees, the Council may aggregate any such requests and charge accordingly. The Records Management Officer may reasonably presume that one requester making multiple requests on the same topic within a 30-day period has done so to avoid fees.

(j) *Waiver or reduction of fees.* To seek a waiver, a requester shall include the request for waiver or reduction of fees, and the justification for such based on the factors set forth in this paragraph, with the request for records to which it pertains. If a requester requests a waiver or reduction and has not indicated in writing an agreement to pay the applicable fees, the time for responding to the request for Council records shall not begin until the Records Management Officer makes a determination regarding the request for a waiver or reduction of fees.

(1) Records responsive to a request shall be furnished without charge, or at a reduced rate below that established in paragraph (b) of this section, where the Council determines, after consideration of all available information, that the requester has demonstrated that:

(i) Disclosure of the requested information is in the public interest because it is likely to contribute significantly to public understanding of the operations or activities of the Government; and

(ii) Disclosure of the information is not primarily in the commercial interest of the requester.

(2) In deciding whether disclosure of the requested information is in the public interest because it is likely to contribute significantly to public understanding of the operations or activities of the Government, the Council will consider the following factors:

(i) The subject of the request: Whether the subject of the requested records concerns the operations or activities of the Government. The subject of the requested records must concern identifiable operations or activities of the Federal government, with a connection that is direct and clear, not remote or attenuated.

(ii) The informative value of the information to be disclosed: Whether the disclosure is ''likely to contribute'' to an understanding of Government operations or activities. The disclosable portions of the requested records must be meaningfully informative about government operations or activities in order to be ''likely to contribute'' to an increased public understanding of those operations or activities. The disclosure of information that already is in the public domain, in either the same or a substantially identical form, would not be likely to contribute to such an understanding.

(iii) The contribution to an understanding of the subject by the public: Whether disclosure of the requested information will contribute to the understanding of a reasonably broad audience of persons interested in the subject, as opposed to the individual understanding of the requester. A requester's expertise in the subject area

as well as his or her ability and intention to effectively convey information to the public shall be considered. It shall be presumed that a representative of the news media will satisfy this consideration. Merely providing information to media sources is insufficient to satisfy this consideration.

(iv) The significance of the contribution to public understanding: Whether the disclosure is likely to contribute ''significantly'' to public understanding of Government operations or activities. The public's understanding of the subject in question prior to disclosure must be significantly enhanced by the disclosure.

(3) To determine whether disclosure of the requested information is primarily in the commercial interest of the requester, the Council will consider the following factors:

(i) The existence and magnitude of a commercial interest: Whether the requester has a commercial interest that would be furthered by the requested disclosure. The Council shall consider any commercial interest of the requester (with reference to the definition of ''commercial use request'' in § 1850.2(b)), or of any person on whose behalf the requester may be acting, that would be furthered by the requested disclosure. Requesters shall be given an opportunity to provide explanatory information regarding this consideration.

(ii) The primary interest in disclosure: Whether any identified commercial interest of the requester is sufficiently great, in comparison with the public interest in disclosure, that disclosure if ''primarily in the commercial interest of the requester.'' A fee waiver or reduction is justified if the public interest standard (paragraph (j)(1)(i) of this section) is satisfied and the public interest is greater than any identified commercial interest in disclosure. The Council shall presume that if a news media requester has satisfied the public interest standard, the public interest is the primary interest served by disclosure to that requester. Disclosure to data brokers or others who merely compile and market Government information for direct economic return shall not be presumed to primarily serve the public interest.

(4) A request for a waiver or reduction of fees shall include a clear statement of how the request satisfies the criteria set forth in paragraphs (j)(2) and (3) of this section, insofar as they apply to each request. The burden shall be on the requester to present evidence or information in support of a request for a waiver or reduction of fees.

(5) Where only some of the records to be released satisfy the requirements for a fee waiver, a waiver shall be granted for those records.

(6) The Records Management Officer shall make a determination on the request for a waiver or reduction of fees and shall notify the requester accordingly. A denial may be appealed to the General Counsel in accordance with § 1850.7.

§ 1850.11 Requests for confidential treatment of business information.

(a) *Submission of request.* Any submitter of information to the Council who desires confidential treatment of business information pursuant to 5 U.S.C. 552(b)(4) shall file a request for confidential treatment with the Council at the time the information is submitted or within a reasonable time after submission. These designations will expire ten years after the date of submission unless the submitter requests, and provides justification for, a longer period.

(b) *Form of request.* Each request for confidential treatment of business information shall state in reasonable detail the facts supporting the commercial or financial nature of the business information and the legal justification under which the business information should be protected. Conclusory statements indicating that release of the information would cause competitive harm generally are not sufficient to justify confidential treatment.

(c) *Designation and separation of confidential material.* A submitter shall clearly mark all information it considers confidential as ''PROPRIETARY'' or ''BUSINESS CONFIDENTIAL'' in the submission and shall separate information so marked from other information submitted. Failure by the submitter to segregate confidential commercial or financial information from other material may result in

release of the nonsegregated material to the public without notice to the submitter.

§ 1850.12 Requests for access to confidential commercial or financial information.

(a) *Notice to submitters.* The Council shall provide a submitter with prompt notice of a FOIA request or administrative appeal that seeks its business information whenever required under paragraph (b) of this section, except as provided in paragraph (e) of this section, in order to give the submitter an opportunity under paragraph (c) of this section to object to disclosure of any specified portion of that information. The notice shall either describe the business information requested or include copies of the requested records containing the information. If notification of a large number of submitters is required, notification may be made by posting or publishing the notice in a place reasonably likely to accomplish notification.

(b) *When notice is required.* Notice shall be given to the submitter whenever:

(1) The submitter has designated the information in good faith as protected from disclosure under FOIA exemption (b)(4); or

(2) The Council has reason to believe that the information may be protected from disclosure under FOIA exemption (b)(4).

(c) *Opportunity to object to disclosure.* The Council shall allow a submitter seven days from the date of receipt of the written notice described in paragraph (a) of this section to provide the Council with a statement of any objection to disclosure. The statement must identify any portions of the information the submitter requests to be withheld under FOIA exemption (b)(4), and describe how each qualifies for protection under the exemption: That is, why the information is a trade secret, or commercial or financial information that is privileged or confidential. If a submitter fails to respond to the notice within the time frame specified, the submitter will be considered to have no objection to disclosure of the information. Information a submitter provides under this paragraph may itself be subject to disclosure under the FOIA.

(d) *Notice of intent to disclose.* The Council shall consider a submitter's objections and specific grounds under the FOIA for nondisclosure in deciding whether to disclose business information. If the Council decides to disclose business information over a submitter's objection, the Council shall give the submitter written notice via certified mail, return receipt requested, or similar means, which shall include:

(1) A statement of reason(s) why the submitter's objections to disclosure were not sustained;

(2) A description of the business information to be disclosed; and

(3) A statement that the Council intends to disclose the information seven days from the date the submitter receives the notice.

(e) *Exceptions to notice requirements.* The notice requirements of paragraphs (a) and (d) of this section shall not apply if:

(1) The Council determines that the information is exempt and will be withheld under a FOIA exemption, other than exemption (b)(4);

(2) The information has been lawfully published or has been officially made available to the public;

(3) Disclosure of the information is required by statute (other than the FOIA) or by a regulation issued in accordance with Executive Order 12600; or

(4) The designation made by the submitter under this section or § 1850.11 appears obviously frivolous, except that, in such a case, the Council shall provide the submitter written notice of any final decision to disclose the information seven days from the date the submitter receives the notice.

(f) *Notice to requester.* The Council shall notify a requester whenever it provides the submitter with notice and an opportunity to object to disclosure; whenever it notifies the submitter of its intent to disclose the requested information; and whenever a submitter files a lawsuit to prevent the disclosure of the information.

(g) *Notice of lawsuits.* Whenever a requester files a lawsuit seeking to compel the disclosure of confidential commercial information, the Council shall promptly notify the submitter.

§ 1850.13 Classified information.

In processing a request for information classified under Executive Order 13526 or any other Executive Order concerning the classification of records, the information shall be reviewed to determine whether it should remain classified. Ordinarily the Council or other Federal agency that classified the information should conduct the review, except that if a record contains information that has been derivatively classified by the Council because it contains information classified by another agency, the Council shall refer the responsibility for responding to the request to the agency that classified the underlying information. Information determined to no longer require classification shall not be withheld on the basis of FOIA exemption (b)(1) (5 U.S.C. 552(b)(1)), but should be reviewed to assess whether any other FOIA exemption should be invoked. Appeals involving classified information shall be processed in accordance with § 1850.7.

Subpart B—Production or Disclosure Under the Privacy Act

§ 1850.31 Purpose and scope.

This subpart contains the regulations of the Gulf Coast Ecosystem Restoration Council (Council) implementing the Privacy Act of 1974, 5 U.S.C. 552a. It sets forth the basic responsibilities of the Council under the Privacy Act (the Act) and offers guidance to members of the public who wish to exercise any of the rights established by the Act with regard to records maintained by the Council. Council records that are contained in a government-wide system of records established by the U.S. Office of Personnel Management (OPM), the General Services Administration (GSA), the Merit Systems Protection Board (MSPB), the Office of Government Ethics (OGE), Equal Employment Opportunity Commission (EEOC) or the Department of Labor (DOL) for which those agencies have published systems notices are subject to the publishing agency's Privacy Act regulations. Where the government-wide systems notices permit access to these records through the employing agency, an individual should submit requests for access to, for amendment of or for an accounting of disclosures to the Council in accordance with § 1850.33.

§ 1850.32 Definitions.

(a) For purposes of this subpart, the terms *individual*, *maintain*, *record*, and *system of records* shall have the meanings set forth in 5 U.S.C. 552a(a).

(b) *Working days* are business days and do not include Saturday, Sunday, or federal holidays.

§ 1850.33 Procedures for requests pertaining to individual records in a record system.

(a) Any person who wishes to be notified if a system of records maintained by the Council contains any record pertaining to him or her, or to request access to such record or to request an accounting of disclosures made of such record, shall submit a written request, either in person or by mail, in accordance with the instructions set forth in the system notice published in the FEDERAL REGISTER. The request shall include:

(1) The name of the individual making the request;

(2) The name of the system of records (as set forth in the system notice to which the request relates);

(3) Any other information specified in the system notice;

(4) When the request is for access to records, a statement indicating whether the requester desires to make a personal inspection of the records or be supplied with copies by mail; and

(5) Any additional information required by § 1850.34 for proper verification of identity or authority to access the information.

(b) Requests pertaining to records contained in a system of records established by the Council and for which the Council has published a system notice should be submitted to the person or office indicated in the system notice. Requests pertaining to Council records contained in the government-wide systems of records listed below should be submitted as follows:

(1) For systems OPM/GOVT–1 (General Personnel Records), OPM/GOVT–2 (Employee Performance File System Records), OPM/GOVT–3 (Records of Adverse Actions and Actions Based on

Unacceptable Performance), GSA/GOVT–4 (Contracted Travel Services Program), OPM/GOVT–5 (Recruiting, Examining and Placement Records), OPM/GOVT–6 (Personnel Research and Test Validation Records), OPM/GOVT–7 (Applicant Race, Sex, National Origin, and Disability Status Records), OPM/GOVT–9 (Files on Position Classification Appeals, Job Grading Appeals and Retained Grade or Pay Appeals), OPM/GOVT–10 (Employee Medical File System Records) and DOL/ESA–13 (Office of Workers' Compensation Programs, Federal Employees' Compensation File), or any other government-wide system of record not specifically listed, to the *restorecouncil@restorethegulf.gov*]; and

(2) For systems OGE/GOVT–1 (Executive Branch Public Financial Disclosure Reports and Other Ethics Program Records), OGE/GOVT–2 (Confidential Statements of Employment and Financial Interests) and MSPB/GOVT–1 (Appeal and Case Records), to the General Counsel at *restorecouncil@restorethegulf.gov*.

(c) Any person whose request for access under paragraph (a) of this section is denied, may appeal that denial in accordance with § 1850.39.

§ 1850.34 Times, places, and requirements for identification of individuals making requests.

(a) If a person submitting a request for access under § 1850.33 has asked that the Council authorize a personal inspection of records pertaining to that person, and the appropriate Council official has granted that request, the requester shall present himself or herself at the time and place specified in the Council's response or arrange another, mutually convenient time with the appropriate Council official.

(b) Prior to personal inspection of the records, the requester shall present sufficient personal identification (*e.g.*, driver's license, employee identification card, social security card, credit cards). If the requester is unable to provide such identification, the requester shall complete and sign in the presence of a Council official a signed statement asserting his or her identity and stipulating that he or she understands that knowingly or willfully seeking or obtaining access to records about another individual under false pretenses is a misdemeanor punishable by fine up to $5,000.

(c) Any person who has requested access under § 1850.3 to records through personal inspection, and who wishes to be accompanied by another person or persons during this inspection, shall submit a written statement authorizing disclosure of the record in such person's or persons' presence.

(d) If an individual submitting a request by mail under § 1850.33 wishes to have copies furnished by mail, he or she must include with the request a signed and notarized statement asserting his or her identity and stipulating that he or she understands that knowingly or willfully seeking or obtaining access to records about another individual under false pretenses is a misdemeanor punishable by fine up to $5,000.

(e) A request filed by the parent of any minor or the legal guardian of any incompetent person shall: State the relationship of the requester to the individual to whom the record pertains; present sufficient identification; and, if not evident from information already available to the Council, present appropriate proof of the relationship or guardianship.

(f) A person making a request pursuant to a power of attorney must possess a specific power of attorney to make that request.

(g) No verification of identity will be required where the records sought are publicly available under the Freedom of Information Act.

§ 1850.35 Disclosure of requested information to individuals.

(a) Upon receipt of request for notification as to whether the Council maintains a record about an individual and/or request for access to such record:

(1) The appropriate Council official shall acknowledge such request in writing within 10 working days of receipt of the request. Wherever practicable, the acknowledgement should contain the notification and/or determination required in paragraph (a)(2) of this section.

(2) The appropriate Council official shall provide, within 30 working days

of receipt of the request, written notification to the requester as to the existence of the records and/or a determination as to whether or not access will be granted. In some cases, such as where records have to be recalled from the Federal Records Center, notification and/or a determination of access may be delayed. In the event of such a delay, the Council official shall inform the requester of this fact, the reasons for the delay, and an estimate of the date on which notification and/or a determination will be forthcoming.

(3) If access to a record is granted, the determination shall indicate when and where the record will be available for personal inspection. If a copy of the record has been requested, the Council official shall mail that copy or retain it at the Council to present to the individual, upon receipt of a check or money order in an amount computed pursuant to § 1850.41.

(4) When access to a record is to be granted, the appropriate Council official will normally provide access within 30 working days of receipt of the request unless, for good cause shown, he or she is unable to do so, in which case the requester shall be informed within 30 working days of receipt of the request as to those reasons and when it is anticipated that access will be granted.

(5) The Council shall not deny any request under § 1850.33 concerning the existence of records about the requester in any system of records it maintains, or any request for access to such records, unless that system is exempted from the requirements of 5 U.S.C. 552a.

(6) If the Council receives a request pursuant to § 1850.33 for access to records in a system of records it maintains which is so exempt, the appropriate Council official shall deny the request.

(b) Upon request, the appropriate Council official shall make available an accounting of disclosures pursuant to 5 U.S.C. 552a(c)(3), unless that system is exempted from the requirements of 5 U.S.C. 552a.

(c) If a request for access to records is denied pursuant to paragraph (a) or (b) of this section, the determination shall specify the reasons for the denial and advise the individual how to appeal the denial in accordance with § 1850.39. All appeals must be submitted in writing to the General Counsel at *GeneralCounsel@restorethegulf.gov*.

(d) Nothing in 5 U.S.C. 552a or this subpart allows an individual access to any information compiled in reasonable anticipation of a civil action or proceeding.

§ 1850.36 Special procedures: Medical records.

In the event the Council receives a request pursuant to § 1850.33 for access to medical records (including psychological records) and the appropriate Council official determines disclosure could be harmful to the individual to whom they relate, he or she may refuse to disclose the records directly to the requester but shall transmit them to a physician designated by that individual.

§ 1850.37 Request for correction or amendment to record.

(a) Any person who wishes to request correction or amendment of any record pertaining to him or her that is contained in a system of records maintained by the Council, shall submit that request in writing in accordance with the instructions set forth in the system notice for that system of records. If the request is submitted by mail, the envelope should be clearly labeled ''Personal Information Amendment.'' The request shall include:

(1) The name of the individual making the request;

(2) The name of the system of records as set forth in the system notice to which the request relates;

(3) A description of the nature (*e.g.*, modification, addition or deletion) and substance of the correction or amendment requested; and

(4) Any other information specified in the system notice.

(b) Any person submitting a request pursuant to paragraph (a) of this section shall include sufficient information in support of that request to allow the Council to apply the standards set forth in 5 U.S.C. 552a(e) requiring the Council to maintain accurate, relevant, timely, and complete information.

(c) All requests to amend pertaining to personnel records described in

§ 1850.33(b) shall conform to the requirements of paragraphs (a) and (b) of this section and may be directed to the appropriate officials as indicated in § 1850.33(b). Such requests may also be directed to the system manager specified in the OPM's systems notices.

(d) Any person whose request under paragraph (a) of this section is denied may appeal that denial in accordance with § 1850.39.

§ 1850.38 Council review of request for correction or amendment to record.

(a) When the Council receives a request for amendment or correction under § 1850.37(a), the appropriate Council official shall acknowledge that request in writing within 10 working days of receipt. He or she shall promptly either:

(1) Determine to grant all or any portion of a request for correction or amendment; and:

(i) Advise the individual of that determination;

(ii) Make the requested correction or amendment; and

(iii) Inform any person or agency outside the Council to whom the record has been disclosed, and where an accounting of that disclosure is maintained in accordance with 5 U.S.C. 552a(c), of the occurrence and substance of the correction or amendments; or

(2) Inform the requester of the refusal to amend the record in accordance with the request; the reason for the refusal; and the procedures whereby the requester can appeal the refusal to the General Counsel of the Council in accordance with § 1850.39.

(b) If the Council official informs the requester of the determination within the 10-day deadline, a separate acknowledgement is not required.

(c) In conducting the review of a request for correction or amendment, the Council official shall be guided by the requirements of 5 U.S.C. 552a(e).

(d) In the event that the Council receives a notice of correction or amendment from another agency that pertains to records maintained by the Council, the Council shall make the appropriate correction or amendment to its records and comply with paragraph (a)(1)(iii) of this section.

(e) Requests for amendment or correction of records maintained in the government-wide systems of records listed in § 1850.35(c) shall be governed by the appropriate agency's regulations cited in that paragraph.

§ 1850.39 Appeal of initial adverse agency determination on correction or amendment.

(a) If a request for correction or amendment of a record in a system of records maintained by the Council is denied, the requester may appeal the determination in writing to the General Counsel at *GeneralCounsel@restorethegulf.gov*.

(b) The General Counsel shall make a final determination with regard to an appeal submitted under paragraph (a) of this section not later than 30 working days from the date on which the individual requests a review, unless for good cause shown, this 30-day period is extended and the requester is notified of the reasons for the extension and of the estimated date on which a final determination will be made. Such extensions will be used only in exceptional circumstances and will not normally exceed 30 working days.

(c) In conducting the review of an appeal submitted under paragraph (a) of this section, the General Counsel shall be guided by the requirements of 5 U.S.C. 552a(e).

(d) If the General Counsel determines to grant all or any portion of a request on an appeal submitted under paragraph (a) of this section, he or she shall so inform the requester, and the appropriate Council official shall comply with the procedures set forth in § 1850.38(a)(1)(ii) and (iii).

(e) If the General Counsel determines in accordance with paragraphs (b) and (c) of this section not to grant all or any portion of a request on an appeal submitted under paragraph (a) of this section, he or she shall inform the requester:

(1) Of this determination and the reasons for it;

(2) Of the requester's right to file a concise statement of reasons for disagreement with the determination of the General Counsel;

(3) That such statements of disagreement will be made available to anyone

to whom the record is subsequently disclosed, together with (if the General Counsel deems it appropriate) a brief statement summarizing the General Counsel's reasons for refusing to amend the record;

(4) That prior recipients of the disputed record will be provided with a copy of the statement of disagreement together with (if the General Counsel deems it appropriate) a brief statement of the General Counsel's reasons for refusing to amend the record, to the extent that an accounting of disclosure is maintained under 5 U.S.C. 552a(c); and

(5) Of the requester's right to file a civil action in Federal district court to seek a review of the determination of the General Counsel in accordance with 5 U.S.C. 552a(g).

(f) The General Counsel shall ensure that any statements of disagreement submitted by a requester are made available or distributed in accordance with paragraphs (e)(3) and (4) of this section.

§ 1850.40 Disclosure of record to person other than the individual to whom it pertains.

The Counsel shall not disclose any record which is contained in a system of records it maintains, by any means of communication to any person or to another agency, except pursuant to a written request by, or with the prior written consent of the individual to whom the record pertains, unless the disclosure is authorized by one or more provisions of 5 U.S.C. 552a(b).

§ 1850.41 Fees.

(a) No fee shall be charged for searches necessary to locate records. No charge shall be made if the total fees authorized are less than $1.00. Fees shall be charged for services rendered under this subpart as follows:

(1) For copies made by photocopy—$0.05 per page (maximum of 10 copies). For copies prepared by computer, such as tapes or printouts, the Council will charge the direct cost incurred by the agency, including operator time. For other forms of duplication, the Council will charge the actual costs of that duplication.

(2) For attestation of documents—$25.00 per authenticating affidavit or declaration.

(3) For certification of documents—$50.00 per authenticating affidavit or declaration.

(b) All required fees shall be paid in full prior to issuance of requested copies of records. Requesters must pay fees by check or money order made payable to the ''Treasury of the United States.''

§ 1850.42 Penalties.

The criminal penalties which have been established for violations of the Privacy Act of 1974 are set forth in 5 U.S.C. 552a(i). Penalties are applicable to any officer or employee of the Council; to contractors and employees of such contractors who enter into contracts with the Council, and who are considered to be employees of the Council within the meaning of 5 U.S.C. 552a(m); and to any person who knowingly and willfully requests or obtains any record concerning an individual from the Council under false pretenses.

PARTS 1851–1899 [RESERVED]

CHAPTER IX—FEDERAL PERMITTING IMPROVEMENT STEERING COUNCIL

Part		*Page*
1900	Federal Permitting Improvement	735

PART 1900—FEDERAL PERMITTING IMPROVEMENT

Sec.
1900.1 Definitions.
1900.2 FAST–41 sectors.

AUTHORITY: 42 U.S.C. 4370m *et seq.*

SOURCE: 86 FR 1287, Jan. 8, 2021, unless otherwise noted.

§ 1900.1 Definitions.

For the purposes of this part, the following terms shall have the meaning indicated:

FAST–41 means Title 41 of the Fixing America's Surface Transportation Act, 42 U.S.C. 4370m *et seq.*

Federal Permitting Improvement Steering Council or *Permitting Council* means the Federal agency established pursuant to 42 U.S.C. 4370m–1(a).

Mining means the process of extracting ore, minerals, or raw materials from the ground. *Mining* does not include the process of extracting oil or natural gas from the ground.

§ 1900.2 FAST–41 sectors.

Pursuant to 42 U.S.C. 4370m(6)(A), the Federal Permitting Improvement Steering Council has added the following sectors to the statutorily defined list of FAST–41 sectors:

(a) Mining.

(b) [Reserved]

FINDING AIDS

A list of CFR titles, subtitles, chapters, subchapters and parts and an alphabetical list of agencies publishing in the CFR are included in the CFR Index and Finding Aids volume to the Code of Federal Regulations which is published separately and revised annually.

Table of CFR Titles and Chapters
Alphabetical List of Agencies Appearing in the CFR
List of CFR Sections Affected

Table of CFR Titles and Chapters

(Revised as of July 1, 2021)

Title 1—General Provisions

I Administrative Committee of the Federal Register (Parts 1—49)
II Office of the Federal Register (Parts 50—299)
III Administrative Conference of the United States (Parts 300—399)
IV Miscellaneous Agencies (Parts 400—599)
VI National Capital Planning Commission (Parts 600—699)

Title 2—Grants and Agreements

SUBTITLE A—OFFICE OF MANAGEMENT AND BUDGET GUIDANCE FOR GRANTS AND AGREEMENTS
I Office of Management and Budget Governmentwide Guidance for Grants and Agreements (Parts 2—199)
II Office of Management and Budget Guidance (Parts 200—299)
SUBTITLE B—FEDERAL AGENCY REGULATIONS FOR GRANTS AND AGREEMENTS
III Department of Health and Human Services (Parts 300—399)
IV Department of Agriculture (Parts 400—499)
VI Department of State (Parts 600—699)
VII Agency for International Development (Parts 700—799)
VIII Department of Veterans Affairs (Parts 800—899)
IX Department of Energy (Parts 900—999)
X Department of the Treasury (Parts 1000—1099)
XI Department of Defense (Parts 1100—1199)
XII Department of Transportation (Parts 1200—1299)
XIII Department of Commerce (Parts 1300—1399)
XIV Department of the Interior (Parts 1400—1499)
XV Environmental Protection Agency (Parts 1500—1599)
XVIII National Aeronautics and Space Administration (Parts 1800—1899)
XX United States Nuclear Regulatory Commission (Parts 2000—2099)
XXII Corporation for National and Community Service (Parts 2200—2299)
XXIII Social Security Administration (Parts 2300—2399)
XXIV Department of Housing and Urban Development (Parts 2400—2499)
XXV National Science Foundation (Parts 2500—2599)
XXVI National Archives and Records Administration (Parts 2600—2699)

Title 2—Grants and Agreements—Continued

Chap.	
XXVII	Small Business Administration (Parts 2700—2799)
XXVIII	Department of Justice (Parts 2800—2899)
XXIX	Department of Labor (Parts 2900—2999)
XXX	Department of Homeland Security (Parts 3000—3099)
XXXI	Institute of Museum and Library Services (Parts 3100—3199)
XXXII	National Endowment for the Arts (Parts 3200—3299)
XXXIII	National Endowment for the Humanities (Parts 3300—3399)
XXXIV	Department of Education (Parts 3400—3499)
XXXV	Export-Import Bank of the United States (Parts 3500—3599)
XXXVI	Office of National Drug Control Policy, Executive Office of the President (Parts 3600—3699)
XXXVII	Peace Corps (Parts 3700—3799)
LVIII	Election Assistance Commission (Parts 5800—5899)
LIX	Gulf Coast Ecosystem Restoration Council (Parts 5900—5999)

Title 3—The President

I	Executive Office of the President (Parts 100—199)

Title 4—Accounts

I	Government Accountability Office (Parts 1—199)

Title 5—Administrative Personnel

I	Office of Personnel Management (Parts 1—1199)
II	Merit Systems Protection Board (Parts 1200—1299)
III	Office of Management and Budget (Parts 1300—1399)
IV	Office of Personnel Management and Office of the Director of National Intelligence (Parts 1400—1499)
V	The International Organizations Employees Loyalty Board (Parts 1500—1599)
VI	Federal Retirement Thrift Investment Board (Parts 1600—1699)
VIII	Office of Special Counsel (Parts 1800—1899)
IX	Appalachian Regional Commission (Parts 1900—1999)
XI	Armed Forces Retirement Home (Parts 2100—2199)
XIV	Federal Labor Relations Authority, General Counsel of the Federal Labor Relations Authority and Federal Service Impasses Panel (Parts 2400—2499)
XVI	Office of Government Ethics (Parts 2600—2699)
XXI	Department of the Treasury (Parts 3100—3199)
XXII	Federal Deposit Insurance Corporation (Parts 3200—3299)
XXIII	Department of Energy (Parts 3300—3399)
XXIV	Federal Energy Regulatory Commission (Parts 3400—3499)
XXV	Department of the Interior (Parts 3500—3599)
XXVI	Department of Defense (Parts 3600—3699)

Title 5—Administrative Personnel—Continued

Chap.	
XXVIII	Department of Justice (Parts 3800—3899)
XXIX	Federal Communications Commission (Parts 3900—3999)
XXX	Farm Credit System Insurance Corporation (Parts 4000—4099)
XXXI	Farm Credit Administration (Parts 4100—4199)
XXXIII	U.S. International Development Finance Corporation (Parts 4300—4399)
XXXIV	Securities and Exchange Commission (Parts 4400—4499)
XXXV	Office of Personnel Management (Parts 4500—4599)
XXXVI	Department of Homeland Security (Parts 4600—4699)
XXXVII	Federal Election Commission (Parts 4700—4799)
XL	Interstate Commerce Commission (Parts 5000—5099)
XLI	Commodity Futures Trading Commission (Parts 5100—5199)
XLII	Department of Labor (Parts 5200—5299)
XLIII	National Science Foundation (Parts 5300—5399)
XLV	Department of Health and Human Services (Parts 5500—5599)
XLVI	Postal Rate Commission (Parts 5600—5699)
XLVII	Federal Trade Commission (Parts 5700—5799)
XLVIII	Nuclear Regulatory Commission (Parts 5800—5899)
XLIX	Federal Labor Relations Authority (Parts 5900—5999)
L	Department of Transportation (Parts 6000—6099)
LII	Export-Import Bank of the United States (Parts 6200—6299)
LIII	Department of Education (Parts 6300—6399)
LIV	Environmental Protection Agency (Parts 6400—6499)
LV	National Endowment for the Arts (Parts 6500—6599)
LVI	National Endowment for the Humanities (Parts 6600—6699)
LVII	General Services Administration (Parts 6700—6799)
LVIII	Board of Governors of the Federal Reserve System (Parts 6800—6899)
LIX	National Aeronautics and Space Administration (Parts 6900—6999)
LX	United States Postal Service (Parts 7000—7099)
LXI	National Labor Relations Board (Parts 7100—7199)
LXII	Equal Employment Opportunity Commission (Parts 7200—7299)
LXIII	Inter-American Foundation (Parts 7300—7399)
LXIV	Merit Systems Protection Board (Parts 7400—7499)
LXV	Department of Housing and Urban Development (Parts 7500—7599)
LXVI	National Archives and Records Administration (Parts 7600—7699)
LXVII	Institute of Museum and Library Services (Parts 7700—7799)
LXVIII	Commission on Civil Rights (Parts 7800—7899)
LXIX	Tennessee Valley Authority (Parts 7900—7999)
LXX	Court Services and Offender Supervision Agency for the District of Columbia (Parts 8000—8099)
LXXI	Consumer Product Safety Commission (Parts 8100—8199)
LXXIII	Department of Agriculture (Parts 8300—8399)

Title 5—Administrative Personnel—Continued

Chap.	
LXXIV	Federal Mine Safety and Health Review Commission (Parts 8400—8499)
LXXVI	Federal Retirement Thrift Investment Board (Parts 8600—8699)
LXXVII	Office of Management and Budget (Parts 8700—8799)
LXXX	Federal Housing Finance Agency (Parts 9000—9099)
LXXXIII	Special Inspector General for Afghanistan Reconstruction (Parts 9300—9399)
LXXXIV	Bureau of Consumer Financial Protection (Parts 9400—9499)
LXXXVI	National Credit Union Administration (Parts 9600—9699)
XCVII	Department of Homeland Security Human Resources Management System (Department of Homeland Security—Office of Personnel Management) (Parts 9700—9799)
XCVIII	Council of the Inspectors General on Integrity and Efficiency (Parts 9800—9899)
XCIX	Military Compensation and Retirement Modernization Commission (Parts 9900—9999)
C	National Council on Disability (Parts 10000—10049)
CI	National Mediation Board (Parts 10100—10199)
CII	U.S. Office of Special Counsel (Parts 10200—10299)

Title 6—Domestic Security

I	Department of Homeland Security, Office of the Secretary (Parts 1—199)
X	Privacy and Civil Liberties Oversight Board (Parts 1000—1099)

Title 7—Agriculture

SUBTITLE A—OFFICE OF THE SECRETARY OF AGRICULTURE (PARTS 0—26)

SUBTITLE B—REGULATIONS OF THE DEPARTMENT OF AGRICULTURE

I	Agricultural Marketing Service (Standards, Inspections, Marketing Practices), Department of Agriculture (Parts 27—209)
II	Food and Nutrition Service, Department of Agriculture (Parts 210—299)
III	Animal and Plant Health Inspection Service, Department of Agriculture (Parts 300—399)
IV	Federal Crop Insurance Corporation, Department of Agriculture (Parts 400—499)
V	Agricultural Research Service, Department of Agriculture (Parts 500—599)
VI	Natural Resources Conservation Service, Department of Agriculture (Parts 600—699)
VII	Farm Service Agency, Department of Agriculture (Parts 700—799)
VIII	Agricultural Marketing Service (Federal Grain Inspection Service, Fair Trade Practices Program), Department of Agriculture (Parts 800—899)

Title 7—Agriculture—Continued

Chap.	
IX	Agricultural Marketing Service (Marketing Agreements and Orders; Fruits, Vegetables, Nuts), Department of Agriculture (Parts 900—999)
X	Agricultural Marketing Service (Marketing Agreements and Orders; Milk), Department of Agriculture (Parts 1000—1199)
XI	Agricultural Marketing Service (Marketing Agreements and Orders; Miscellaneous Commodities), Department of Agriculture (Parts 1200—1299)
XIV	Commodity Credit Corporation, Department of Agriculture (Parts 1400—1499)
XV	Foreign Agricultural Service, Department of Agriculture (Parts 1500—1599)
XVI	(Parts 1600—1699) [Reserved]
XVII	Rural Utilities Service, Department of Agriculture (Parts 1700—1799)
XVIII	Rural Housing Service, Rural Business-Cooperative Service, Rural Utilities Service, and Farm Service Agency, Department of Agriculture (Parts 1800—2099)
XX	(Parts 2200—2299) [Reserved]
XXV	Office of Advocacy and Outreach, Department of Agriculture (Parts 2500—2599)
XXVI	Office of Inspector General, Department of Agriculture (Parts 2600—2699)
XXVII	Office of Information Resources Management, Department of Agriculture (Parts 2700—2799)
XXVIII	Office of Operations, Department of Agriculture (Parts 2800—2899)
XXIX	Office of Energy Policy and New Uses, Department of Agriculture (Parts 2900—2999)
XXX	Office of the Chief Financial Officer, Department of Agriculture (Parts 3000—3099)
XXXI	Office of Environmental Quality, Department of Agriculture (Parts 3100—3199)
XXXII	Office of Procurement and Property Management, Department of Agriculture (Parts 3200—3299)
XXXIII	Office of Transportation, Department of Agriculture (Parts 3300—3399)
XXXIV	National Institute of Food and Agriculture (Parts 3400—3499)
XXXV	Rural Housing Service, Department of Agriculture (Parts 3500—3599)
XXXVI	National Agricultural Statistics Service, Department of Agriculture (Parts 3600—3699)
XXXVII	Economic Research Service, Department of Agriculture (Parts 3700—3799)
XXXVIII	World Agricultural Outlook Board, Department of Agriculture (Parts 3800—3899)
XLI	[Reserved]
XLII	Rural Business-Cooperative Service and Rural Utilities Service, Department of Agriculture (Parts 4200—4299)

Title 7—Agriculture—Continued

Chap.

L Rural Business-Cooperative Service, and Rural Utilities Service, Department of Agriculture (Parts 5000—5099)

Title 8—Aliens and Nationality

I Department of Homeland Security (Parts 1—499)

V Executive Office for Immigration Review, Department of Justice (Parts 1000—1399)

Title 9—Animals and Animal Products

I Animal and Plant Health Inspection Service, Department of Agriculture (Parts 1—199)

II Agricultural Marketing Service (Fair Trade Practices Program), Department of Agriculture (Parts 200—299)

III Food Safety and Inspection Service, Department of Agriculture (Parts 300—599)

Title 10—Energy

I Nuclear Regulatory Commission (Parts 0—199)

II Department of Energy (Parts 200—699)

III Department of Energy (Parts 700—999)

X Department of Energy (General Provisions) (Parts 1000—1099)

XIII Nuclear Waste Technical Review Board (Parts 1300—1399)

XVII Defense Nuclear Facilities Safety Board (Parts 1700—1799)

XVIII Northeast Interstate Low-Level Radioactive Waste Commission (Parts 1800—1899)

Title 11—Federal Elections

I Federal Election Commission (Parts 1—9099)

II Election Assistance Commission (Parts 9400—9499)

Title 12—Banks and Banking

I Comptroller of the Currency, Department of the Treasury (Parts 1—199)

II Federal Reserve System (Parts 200—299)

III Federal Deposit Insurance Corporation (Parts 300—399)

IV Export-Import Bank of the United States (Parts 400—499)

V (Parts 500—599) [Reserved]

VI Farm Credit Administration (Parts 600—699)

VII National Credit Union Administration (Parts 700—799)

VIII Federal Financing Bank (Parts 800—899)

IX (Parts 900—999) [Reserved]

X Bureau of Consumer Financial Protection (Parts 1000—1099)

Title 12—Banks and Banking—Continued

Chap.

XI Federal Financial Institutions Examination Council (Parts 1100—1199)

XII Federal Housing Finance Agency (Parts 1200—1299)

XIII Financial Stability Oversight Council (Parts 1300—1399)

XIV Farm Credit System Insurance Corporation (Parts 1400—1499)

XV Department of the Treasury (Parts 1500—1599)

XVI Office of Financial Research, Department of the Treasury (Parts 1600—1699)

XVII Office of Federal Housing Enterprise Oversight, Department of Housing and Urban Development (Parts 1700—1799)

XVIII Community Development Financial Institutions Fund, Department of the Treasury (Parts 1800—1899)

Title 13—Business Credit and Assistance

I Small Business Administration (Parts 1—199)

III Economic Development Administration, Department of Commerce (Parts 300—399)

IV Emergency Steel Guarantee Loan Board (Parts 400—499)

V Emergency Oil and Gas Guaranteed Loan Board (Parts 500—599)

Title 14—Aeronautics and Space

I Federal Aviation Administration, Department of Transportation (Parts 1—199)

II Office of the Secretary, Department of Transportation (Aviation Proceedings) (Parts 200—399)

III Commercial Space Transportation, Federal Aviation Administration, Department of Transportation (Parts 400—1199)

V National Aeronautics and Space Administration (Parts 1200—1299)

VI Air Transportation System Stabilization (Parts 1300—1399)

Title 15—Commerce and Foreign Trade

SUBTITLE A—OFFICE OF THE SECRETARY OF COMMERCE (PARTS 0—29)

SUBTITLE B—REGULATIONS RELATING TO COMMERCE AND FOREIGN TRADE

I Bureau of the Census, Department of Commerce (Parts 30—199)

II National Institute of Standards and Technology, Department of Commerce (Parts 200—299)

III International Trade Administration, Department of Commerce (Parts 300—399)

IV Foreign-Trade Zones Board, Department of Commerce (Parts 400—499)

VII Bureau of Industry and Security, Department of Commerce (Parts 700—799)

Title 15—Commerce and Foreign Trade—Continued

Chap.

VIII Bureau of Economic Analysis, Department of Commerce (Parts 800—899)

IX National Oceanic and Atmospheric Administration, Department of Commerce (Parts 900—999)

XI National Technical Information Service, Department of Commerce (Parts 1100—1199)

XIII East-West Foreign Trade Board (Parts 1300—1399)

XIV Minority Business Development Agency (Parts 1400—1499)

XV Office of the Under-Secretary for Economic Affairs, Department of Commerce (Parts 1500—1599)

SUBTITLE C—REGULATIONS RELATING TO FOREIGN TRADE AGREEMENTS

XX Office of the United States Trade Representative (Parts 2000—2099)

SUBTITLE D—REGULATIONS RELATING TO TELECOMMUNICATIONS AND INFORMATION

XXIII National Telecommunications and Information Administration, Department of Commerce (Parts 2300—2399) [Reserved]

Title 16—Commercial Practices

I Federal Trade Commission (Parts 0—999)

II Consumer Product Safety Commission (Parts 1000—1799)

Title 17—Commodity and Securities Exchanges

I Commodity Futures Trading Commission (Parts 1—199)

II Securities and Exchange Commission (Parts 200—399)

IV Department of the Treasury (Parts 400—499)

Title 18—Conservation of Power and Water Resources

I Federal Energy Regulatory Commission, Department of Energy (Parts 1—399)

III Delaware River Basin Commission (Parts 400—499)

VI Water Resources Council (Parts 700—799)

VIII Susquehanna River Basin Commission (Parts 800—899)

XIII Tennessee Valley Authority (Parts 1300—1399)

Title 19—Customs Duties

I U.S. Customs and Border Protection, Department of Homeland Security; Department of the Treasury (Parts 0—199)

II United States International Trade Commission (Parts 200—299)

III International Trade Administration, Department of Commerce (Parts 300—399)

IV U.S. Immigration and Customs Enforcement, Department of Homeland Security (Parts 400—599) [Reserved]

Title 20—Employees' Benefits

Chap.

I Office of Workers' Compensation Programs, Department of Labor (Parts 1—199)

II Railroad Retirement Board (Parts 200—399)

III Social Security Administration (Parts 400—499)

IV Employees' Compensation Appeals Board, Department of Labor (Parts 500—599)

V Employment and Training Administration, Department of Labor (Parts 600—699)

VI Office of Workers' Compensation Programs, Department of Labor (Parts 700—799)

VII Benefits Review Board, Department of Labor (Parts 800—899)

VIII Joint Board for the Enrollment of Actuaries (Parts 900—999)

IX Office of the Assistant Secretary for Veterans' Employment and Training Service, Department of Labor (Parts 1000—1099)

Title 21—Food and Drugs

I Food and Drug Administration, Department of Health and Human Services (Parts 1—1299)

II Drug Enforcement Administration, Department of Justice (Parts 1300—1399)

III Office of National Drug Control Policy (Parts 1400—1499)

Title 22—Foreign Relations

I Department of State (Parts 1—199)

II Agency for International Development (Parts 200—299)

III Peace Corps (Parts 300—399)

IV International Joint Commission, United States and Canada (Parts 400—499)

V United States Agency for Global Media (Parts 500—599)

VII U.S. International Development Finance Corporation (Parts 700—799)

IX Foreign Service Grievance Board (Parts 900—999)

X Inter-American Foundation (Parts 1000—1099)

XI International Boundary and Water Commission, United States and Mexico, United States Section (Parts 1100—1199)

XII United States International Development Cooperation Agency (Parts 1200—1299)

XIII Millennium Challenge Corporation (Parts 1300—1399)

XIV Foreign Service Labor Relations Board; Federal Labor Relations Authority; General Counsel of the Federal Labor Relations Authority; and the Foreign Service Impasse Disputes Panel (Parts 1400—1499)

XV African Development Foundation (Parts 1500—1599)

XVI Japan-United States Friendship Commission (Parts 1600—1699)

XVII United States Institute of Peace (Parts 1700—1799)

Title 23—Highways

Chap.

I Federal Highway Administration, Department of Transportation (Parts 1—999)

II National Highway Traffic Safety Administration and Federal Highway Administration, Department of Transportation (Parts 1200—1299)

III National Highway Traffic Safety Administration, Department of Transportation (Parts 1300—1399)

Title 24—Housing and Urban Development

SUBTITLE A—OFFICE OF THE SECRETARY, DEPARTMENT OF HOUSING AND URBAN DEVELOPMENT (PARTS 0—99)

SUBTITLE B—REGULATIONS RELATING TO HOUSING AND URBAN DEVELOPMENT

I Office of Assistant Secretary for Equal Opportunity, Department of Housing and Urban Development (Parts 100—199)

II Office of Assistant Secretary for Housing-Federal Housing Commissioner, Department of Housing and Urban Development (Parts 200—299)

III Government National Mortgage Association, Department of Housing and Urban Development (Parts 300—399)

IV Office of Housing and Office of Multifamily Housing Assistance Restructuring, Department of Housing and Urban Development (Parts 400—499)

V Office of Assistant Secretary for Community Planning and Development, Department of Housing and Urban Development (Parts 500—599)

VI Office of Assistant Secretary for Community Planning and Development, Department of Housing and Urban Development (Parts 600—699) [Reserved]

VII Office of the Secretary, Department of Housing and Urban Development (Housing Assistance Programs and Public and Indian Housing Programs) (Parts 700—799)

VIII Office of the Assistant Secretary for Housing—Federal Housing Commissioner, Department of Housing and Urban Development (Section 8 Housing Assistance Programs, Section 202 Direct Loan Program, Section 202 Supportive Housing for the Elderly Program and Section 811 Supportive Housing for Persons With Disabilities Program) (Parts 800—899)

IX Office of Assistant Secretary for Public and Indian Housing, Department of Housing and Urban Development (Parts 900—1699)

X Office of Assistant Secretary for Housing—Federal Housing Commissioner, Department of Housing and Urban Development (Interstate Land Sales Registration Program) (Parts 1700—1799) [Reserved]

XII Office of Inspector General, Department of Housing and Urban Development (Parts 2000—2099)

XV Emergency Mortgage Insurance and Loan Programs, Department of Housing and Urban Development (Parts 2700—2799) [Reserved]

Title 24—Housing and Urban Development—Continued

Chap.

XX Office of Assistant Secretary for Housing—Federal Housing Commissioner, Department of Housing and Urban Development (Parts 3200—3899)

XXIV Board of Directors of the HOPE for Homeowners Program (Parts 4000—4099) [Reserved]

XXV Neighborhood Reinvestment Corporation (Parts 4100—4199)

Title 25—Indians

I Bureau of Indian Affairs, Department of the Interior (Parts 1—299)

II Indian Arts and Crafts Board, Department of the Interior (Parts 300—399)

III National Indian Gaming Commission, Department of the Interior (Parts 500—599)

IV Office of Navajo and Hopi Indian Relocation (Parts 700—899)

V Bureau of Indian Affairs, Department of the Interior, and Indian Health Service, Department of Health and Human Services (Part 900—999)

VI Office of the Assistant Secretary, Indian Affairs, Department of the Interior (Parts 1000—1199)

VII Office of the Special Trustee for American Indians, Department of the Interior (Parts 1200—1299)

Title 26—Internal Revenue

I Internal Revenue Service, Department of the Treasury (Parts 1—End)

Title 27—Alcohol, Tobacco Products and Firearms

I Alcohol and Tobacco Tax and Trade Bureau, Department of the Treasury (Parts 1—399)

II Bureau of Alcohol, Tobacco, Firearms, and Explosives, Department of Justice (Parts 400—799)

Title 28—Judicial Administration

I Department of Justice (Parts 0—299)

III Federal Prison Industries, Inc., Department of Justice (Parts 300—399)

V Bureau of Prisons, Department of Justice (Parts 500—599)

VI Offices of Independent Counsel, Department of Justice (Parts 600—699)

VII Office of Independent Counsel (Parts 700—799)

VIII Court Services and Offender Supervision Agency for the District of Columbia (Parts 800—899)

IX National Crime Prevention and Privacy Compact Council (Parts 900—999)

Title 28—Judicial Administration—Continued

Chap.

XI Department of Justice and Department of State (Parts 1100—1199)

Title 29—Labor

SUBTITLE A—OFFICE OF THE SECRETARY OF LABOR (PARTS 0—99)

SUBTITLE B—REGULATIONS RELATING TO LABOR

I National Labor Relations Board (Parts 100—199)

II Office of Labor-Management Standards, Department of Labor (Parts 200—299)

III National Railroad Adjustment Board (Parts 300—399)

IV Office of Labor-Management Standards, Department of Labor (Parts 400—499)

V Wage and Hour Division, Department of Labor (Parts 500—899)

IX Construction Industry Collective Bargaining Commission (Parts 900—999)

X National Mediation Board (Parts 1200—1299)

XII Federal Mediation and Conciliation Service (Parts 1400—1499)

XIV Equal Employment Opportunity Commission (Parts 1600—1699)

XVII Occupational Safety and Health Administration, Department of Labor (Parts 1900—1999)

XX Occupational Safety and Health Review Commission (Parts 2200—2499)

XXV Employee Benefits Security Administration, Department of Labor (Parts 2500—2599)

XXVII Federal Mine Safety and Health Review Commission (Parts 2700—2799)

XL Pension Benefit Guaranty Corporation (Parts 4000—4999)

Title 30—Mineral Resources

I Mine Safety and Health Administration, Department of Labor (Parts 1—199)

II Bureau of Safety and Environmental Enforcement, Department of the Interior (Parts 200—299)

IV Geological Survey, Department of the Interior (Parts 400—499)

V Bureau of Ocean Energy Management, Department of the Interior (Parts 500—599)

VII Office of Surface Mining Reclamation and Enforcement, Department of the Interior (Parts 700—999)

XII Office of Natural Resources Revenue, Department of the Interior (Parts 1200—1299)

Title 31—Money and Finance: Treasury

SUBTITLE A—OFFICE OF THE SECRETARY OF THE TREASURY (PARTS 0—50)

SUBTITLE B—REGULATIONS RELATING TO MONEY AND FINANCE

Title 31—Money and Finance: Treasury—Continued

Chap.

I Monetary Offices, Department of the Treasury (Parts 51—199)

II Fiscal Service, Department of the Treasury (Parts 200—399)

IV Secret Service, Department of the Treasury (Parts 400—499)

V Office of Foreign Assets Control, Department of the Treasury (Parts 500—599)

VI Bureau of Engraving and Printing, Department of the Treasury (Parts 600—699)

VII Federal Law Enforcement Training Center, Department of the Treasury (Parts 700—799)

VIII Office of Investment Security, Department of the Treasury (Parts 800—899)

IX Federal Claims Collection Standards (Department of the Treasury—Department of Justice) (Parts 900—999)

X Financial Crimes Enforcement Network, Department of the Treasury (Parts 1000—1099)

Title 32—National Defense

SUBTITLE A—DEPARTMENT OF DEFENSE

I Office of the Secretary of Defense (Parts 1—399)

V Department of the Army (Parts 400—699)

VI Department of the Navy (Parts 700—799)

VII Department of the Air Force (Parts 800—1099)

SUBTITLE B—OTHER REGULATIONS RELATING TO NATIONAL DEFENSE

XII Department of Defense, Defense Logistics Agency (Parts 1200—1299)

XVI Selective Service System (Parts 1600—1699)

XVII Office of the Director of National Intelligence (Parts 1700—1799)

XVIII National Counterintelligence Center (Parts 1800—1899)

XIX Central Intelligence Agency (Parts 1900—1999)

XX Information Security Oversight Office, National Archives and Records Administration (Parts 2000—2099)

XXI National Security Council (Parts 2100—2199)

XXIV Office of Science and Technology Policy (Parts 2400—2499)

XXVII Office for Micronesian Status Negotiations (Parts 2700—2799)

XXVIII Office of the Vice President of the United States (Parts 2800—2899)

Title 33—Navigation and Navigable Waters

I Coast Guard, Department of Homeland Security (Parts 1—199)

II Corps of Engineers, Department of the Army, Department of Defense (Parts 200—399)

IV Great Lakes St. Lawrence Seaway Development Corporation, Department of Transportation (Parts 400—499)

Title 34—Education

Chap.

SUBTITLE A—OFFICE OF THE SECRETARY, DEPARTMENT OF EDUCATION (PARTS 1—99)

SUBTITLE B—REGULATIONS OF THE OFFICES OF THE DEPARTMENT OF EDUCATION

I Office for Civil Rights, Department of Education (Parts 100—199)

II Office of Elementary and Secondary Education, Department of Education (Parts 200—299)

III Office of Special Education and Rehabilitative Services, Department of Education (Parts 300—399)

IV Office of Career, Technical, and Adult Education, Department of Education (Parts 400—499)

V Office of Bilingual Education and Minority Languages Affairs, Department of Education (Parts 500—599) [Reserved]

VI Office of Postsecondary Education, Department of Education (Parts 600—699)

VII Office of Educational Research and Improvement, Department of Education (Parts 700—799) [Reserved]

SUBTITLE C—REGULATIONS RELATING TO EDUCATION

XI (Parts 1100—1199) [Reserved]

XII National Council on Disability (Parts 1200—1299)

Title 35 [Reserved]

Title 36—Parks, Forests, and Public Property

I National Park Service, Department of the Interior (Parts 1—199)

II Forest Service, Department of Agriculture (Parts 200—299)

III Corps of Engineers, Department of the Army (Parts 300—399)

IV American Battle Monuments Commission (Parts 400—499)

V Smithsonian Institution (Parts 500—599)

VI [Reserved]

VII Library of Congress (Parts 700—799)

VIII Advisory Council on Historic Preservation (Parts 800—899)

IX Pennsylvania Avenue Development Corporation (Parts 900—999)

X Presidio Trust (Parts 1000—1099)

XI Architectural and Transportation Barriers Compliance Board (Parts 1100—1199)

XII National Archives and Records Administration (Parts 1200—1299)

XV Oklahoma City National Memorial Trust (Parts 1500—1599)

XVI Morris K. Udall Scholarship and Excellence in National Environmental Policy Foundation (Parts 1600—1699)

Title 37—Patents, Trademarks, and Copyrights

I United States Patent and Trademark Office, Department of Commerce (Parts 1—199)

II U.S. Copyright Office, Library of Congress (Parts 200—299)

Title 37—Patents, Trademarks, and Copyrights—Continued

Chap.

III Copyright Royalty Board, Library of Congress (Parts 300—399)

IV National Institute of Standards and Technology, Department of Commerce (Parts 400—599)

Title 38—Pensions, Bonuses, and Veterans' Relief

I Department of Veterans Affairs (Parts 0—199)

II Armed Forces Retirement Home (Parts 200—299)

Title 39—Postal Service

I United States Postal Service (Parts 1—999)

III Postal Regulatory Commission (Parts 3000—3099)

Title 40—Protection of Environment

I Environmental Protection Agency (Parts 1—1099)

IV Environmental Protection Agency and Department of Justice (Parts 1400—1499)

V Council on Environmental Quality (Parts 1500—1599)

VI Chemical Safety and Hazard Investigation Board (Parts 1600—1699)

VII Environmental Protection Agency and Department of Defense; Uniform National Discharge Standards for Vessels of the Armed Forces (Parts 1700—1799)

VIII Gulf Coast Ecosystem Restoration Council (Parts 1800—1899)

IX Federal Permitting Improvement Steering Council (Part 1900)

Title 41—Public Contracts and Property Management

SUBTITLE A—FEDERAL PROCUREMENT REGULATIONS SYSTEM [NOTE]

SUBTITLE B—OTHER PROVISIONS RELATING TO PUBLIC CONTRACTS

50 Public Contracts, Department of Labor (Parts 50–1—50–999)

51 Committee for Purchase From People Who Are Blind or Severely Disabled (Parts 51–1—51–99)

60 Office of Federal Contract Compliance Programs, Equal Employment Opportunity, Department of Labor (Parts 60–1—60–999)

61 Office of the Assistant Secretary for Veterans' Employment and Training Service, Department of Labor (Parts 61–1—61–999)

62—100 [Reserved]

SUBTITLE C—FEDERAL PROPERTY MANAGEMENT REGULATIONS SYSTEM

101 Federal Property Management Regulations (Parts 101–1—101–99)

102 Federal Management Regulation (Parts 102–1—102–299)

103—104 [Reserved]

105 General Services Administration (Parts 105–1—105–999)

Title 41—Public Contracts and Property Management—Continued

Chap.

109 Department of Energy Property Management Regulations (Parts 109–1—109–99)

114 Department of the Interior (Parts 114–1—114–99)

115 Environmental Protection Agency (Parts 115–1—115–99)

128 Department of Justice (Parts 128–1—128–99)

129—200 [Reserved]

SUBTITLE D—OTHER PROVISIONS RELATING TO PROPERTY MANAGEMENT [RESERVED]

SUBTITLE E—FEDERAL INFORMATION RESOURCES MANAGEMENT REGULATIONS SYSTEM [RESERVED]

SUBTITLE F—FEDERAL TRAVEL REGULATION SYSTEM

300 General (Parts 300–1—300–99)

301 Temporary Duty (TDY) Travel Allowances (Parts 301–1—301–99)

302 Relocation Allowances (Parts 302–1—302–99)

303 Payment of Expenses Connected with the Death of Certain Employees (Part 303–1—303–99)

304 Payment of Travel Expenses from a Non-Federal Source (Parts 304–1—304–99)

Title 42—Public Health

I Public Health Service, Department of Health and Human Services (Parts 1—199)

II—III [Reserved]

IV Centers for Medicare & Medicaid Services, Department of Health and Human Services (Parts 400—699)

V Office of Inspector General-Health Care, Department of Health and Human Services (Parts 1000—1099)

Title 43—Public Lands: Interior

SUBTITLE A—OFFICE OF THE SECRETARY OF THE INTERIOR (PARTS 1—199)

SUBTITLE B—REGULATIONS RELATING TO PUBLIC LANDS

I Bureau of Reclamation, Department of the Interior (Parts 400—999)

II Bureau of Land Management, Department of the Interior (Parts 1000—9999)

III Utah Reclamation Mitigation and Conservation Commission (Parts 10000—10099)

Title 44—Emergency Management and Assistance

I Federal Emergency Management Agency, Department of Homeland Security (Parts 0—399)

IV Department of Commerce and Department of Transportation (Parts 400—499)

Title 45—Public Welfare

Chap.

SUBTITLE A—DEPARTMENT OF HEALTH AND HUMAN SERVICES (PARTS 1—199)

SUBTITLE B—REGULATIONS RELATING TO PUBLIC WELFARE

II Office of Family Assistance (Assistance Programs), Administration for Children and Families, Department of Health and Human Services (Parts 200—299)

III Office of Child Support Enforcement (Child Support Enforcement Program), Administration for Children and Families, Department of Health and Human Services (Parts 300—399)

IV Office of Refugee Resettlement, Administration for Children and Families, Department of Health and Human Services (Parts 400—499)

V Foreign Claims Settlement Commission of the United States, Department of Justice (Parts 500—599)

VI National Science Foundation (Parts 600—699)

VII Commission on Civil Rights (Parts 700—799)

VIII Office of Personnel Management (Parts 800—899)

IX Denali Commission (Parts 900—999)

X Office of Community Services, Administration for Children and Families, Department of Health and Human Services (Parts 1000—1099)

XI National Foundation on the Arts and the Humanities (Parts 1100—1199)

XII Corporation for National and Community Service (Parts 1200—1299)

XIII Administration for Children and Families, Department of Health and Human Services (Parts 1300—1399)

XVI Legal Services Corporation (Parts 1600—1699)

XVII National Commission on Libraries and Information Science (Parts 1700—1799)

XVIII Harry S. Truman Scholarship Foundation (Parts 1800—1899)

XXI Commission of Fine Arts (Parts 2100—2199)

XXIII Arctic Research Commission (Parts 2300—2399)

XXIV James Madison Memorial Fellowship Foundation (Parts 2400—2499)

XXV Corporation for National and Community Service (Parts 2500—2599)

Title 46—Shipping

I Coast Guard, Department of Homeland Security (Parts 1—199)

II Maritime Administration, Department of Transportation (Parts 200—399)

III Coast Guard (Great Lakes Pilotage), Department of Homeland Security (Parts 400—499)

IV Federal Maritime Commission (Parts 500—599)

Title 47—Telecommunication

Chap.

I Federal Communications Commission (Parts 0—199)

II Office of Science and Technology Policy and National Security Council (Parts 200—299)

III National Telecommunications and Information Administration, Department of Commerce (Parts 300—399)

IV National Telecommunications and Information Administration, Department of Commerce, and National Highway Traffic Safety Administration, Department of Transportation (Parts 400—499)

V The First Responder Network Authority (Parts 500—599)

Title 48—Federal Acquisition Regulations System

1 Federal Acquisition Regulation (Parts 1—99)

2 Defense Acquisition Regulations System, Department of Defense (Parts 200—299)

3 Department of Health and Human Services (Parts 300—399)

4 Department of Agriculture (Parts 400—499)

5 General Services Administration (Parts 500—599)

6 Department of State (Parts 600—699)

7 Agency for International Development (Parts 700—799)

8 Department of Veterans Affairs (Parts 800—899)

9 Department of Energy (Parts 900—999)

10 Department of the Treasury (Parts 1000—1099)

12 Department of Transportation (Parts 1200—1299)

13 Department of Commerce (Parts 1300—1399)

14 Department of the Interior (Parts 1400—1499)

15 Environmental Protection Agency (Parts 1500—1599)

16 Office of Personnel Management Federal Employees Health Benefits Acquisition Regulation (Parts 1600—1699)

17 Office of Personnel Management (Parts 1700—1799)

18 National Aeronautics and Space Administration (Parts 1800—1899)

19 Broadcasting Board of Governors (Parts 1900—1999)

20 Nuclear Regulatory Commission (Parts 2000—2099)

21 Office of Personnel Management, Federal Employees Group Life Insurance Federal Acquisition Regulation (Parts 2100—2199)

23 Social Security Administration (Parts 2300—2399)

24 Department of Housing and Urban Development (Parts 2400—2499)

25 National Science Foundation (Parts 2500—2599)

28 Department of Justice (Parts 2800—2899)

29 Department of Labor (Parts 2900—2999)

30 Department of Homeland Security, Homeland Security Acquisition Regulation (HSAR) (Parts 3000—3099)

34 Department of Education Acquisition Regulation (Parts 3400—3499)

Title 48—Federal Acquisition Regulations System—Continued

Chap.

51 Department of the Army Acquisition Regulations (Parts 5100—5199) [Reserved]

52 Department of the Navy Acquisition Regulations (Parts 5200—5299)

53 Department of the Air Force Federal Acquisition Regulation Supplement (Parts 5300—5399) [Reserved]

54 Defense Logistics Agency, Department of Defense (Parts 5400—5499)

57 African Development Foundation (Parts 5700—5799)

61 Civilian Board of Contract Appeals, General Services Administration (Parts 6100—6199)

99 Cost Accounting Standards Board, Office of Federal Procurement Policy, Office of Management and Budget (Parts 9900—9999)

Title 49—Transportation

SUBTITLE A—OFFICE OF THE SECRETARY OF TRANSPORTATION (PARTS 1—99)

SUBTITLE B—OTHER REGULATIONS RELATING TO TRANSPORTATION

I Pipeline and Hazardous Materials Safety Administration, Department of Transportation (Parts 100—199)

II Federal Railroad Administration, Department of Transportation (Parts 200—299)

III Federal Motor Carrier Safety Administration, Department of Transportation (Parts 300—399)

IV Coast Guard, Department of Homeland Security (Parts 400—499)

V National Highway Traffic Safety Administration, Department of Transportation (Parts 500—599)

VI Federal Transit Administration, Department of Transportation (Parts 600—699)

VII National Railroad Passenger Corporation (AMTRAK) (Parts 700—799)

VIII National Transportation Safety Board (Parts 800—999)

X Surface Transportation Board (Parts 1000—1399)

XI Research and Innovative Technology Administration, Department of Transportation (Parts 1400—1499) [Reserved]

XII Transportation Security Administration, Department of Homeland Security (Parts 1500—1699)

Title 50—Wildlife and Fisheries

I United States Fish and Wildlife Service, Department of the Interior (Parts 1—199)

II National Marine Fisheries Service, National Oceanic and Atmospheric Administration, Department of Commerce (Parts 200—299)

III International Fishing and Related Activities (Parts 300—399)

Title 50—Wildlife and Fisheries—Continued

Chap.

IV Joint Regulations (United States Fish and Wildlife Service, Department of the Interior and National Marine Fisheries Service, National Oceanic and Atmospheric Administration, Department of Commerce); Endangered Species Committee Regulations (Parts 400—499)

V Marine Mammal Commission (Parts 500—599)

VI Fishery Conservation and Management, National Oceanic and Atmospheric Administration, Department of Commerce (Parts 600—699)

Alphabetical List of Agencies Appearing in the CFR

(Revised as of July 1, 2021)

Agency	CFR Title, Subtitle or Chapter
Administrative Conference of the United States	1, III
Advisory Council on Historic Preservation	36, VIII
Advocacy and Outreach, Office of	7, XXV
Afghanistan Reconstruction, Special Inspector General for	5, LXXXIII
African Development Foundation	22, XV
Federal Acquisition Regulation	48, 57
Agency for International Development	2, VII; 22, II
Federal Acquisition Regulation	48, 7
Agricultural Marketing Service	7, I, VIII, IX, X, XI; 9, II
Agricultural Research Service	7, V
Agriculture, Department of	2, IV; 5, LXXIII
Advocacy and Outreach, Office of	7, XXV
Agricultural Marketing Service	7, I, VIII, IX, X, XI; 9, II
Agricultural Research Service	7, V
Animal and Plant Health Inspection Service	7, III; 9, I
Chief Financial Officer, Office of	7, XXX
Commodity Credit Corporation	7, XIV
Economic Research Service	7, XXXVII
Energy Policy and New Uses, Office of	2, IX; 7, XXIX
Environmental Quality, Office of	7, XXXI
Farm Service Agency	7, VII, XVIII
Federal Acquisition Regulation	48, 4
Federal Crop Insurance Corporation	7, IV
Food and Nutrition Service	7, II
Food Safety and Inspection Service	9, III
Foreign Agricultural Service	7, XV
Forest Service	36, II
Information Resources Management, Office of	7, XXVII
Inspector General, Office of	7, XXVI
National Agricultural Library	7, XLI
National Agricultural Statistics Service	7, XXXVI
National Institute of Food and Agriculture	7, XXXIV
Natural Resources Conservation Service	7, VI
Operations, Office of	7, XXVIII
Procurement and Property Management, Office of	7, XXXII
Rural Business-Cooperative Service	7, XVIII, XLII
Rural Development Administration	7, XLII
Rural Housing Service	7, XVIII, XXXV
Rural Utilities Service	7, XVII, XVIII, XLII
Secretary of Agriculture, Office of	7, Subtitle A
Transportation, Office of	7, XXXIII
World Agricultural Outlook Board	7, XXXVIII
Air Force, Department of	32, VII
Federal Acquisition Regulation Supplement	48, 53
Air Transportation Stabilization Board	14, VI
Alcohol and Tobacco Tax and Trade Bureau	27, I
Alcohol, Tobacco, Firearms, and Explosives, Bureau of	27, II
AMTRAK	49, VII
American Battle Monuments Commission	36, IV
American Indians, Office of the Special Trustee	25, VII
Animal and Plant Health Inspection Service	7, III; 9, I
Appalachian Regional Commission	5, IX
Architectural and Transportation Barriers Compliance Board	36, XI

Agency	CFR Title, Subtitle or Chapter
Arctic Research Commission	45, XXIII
Armed Forces Retirement Home	5, XI; 38, II
Army, Department of	32, V
Engineers, Corps of	33, II; 36, III
Federal Acquisition Regulation	48, 51
Benefits Review Board	20, VII
Bilingual Education and Minority Languages Affairs, Office of	34, V
Blind or Severely Disabled, Committee for Purchase from People Who Are	41, 51
Federal Acquisition Regulation	48, 19
Career, Technical, and Adult Education, Office of	34, IV
Census Bureau	15, I
Centers for Medicare & Medicaid Services	42, IV
Central Intelligence Agency	32, XIX
Chemical Safety and Hazard Investigation Board	40, VI
Chief Financial Officer, Office of	7, XXX
Child Support Enforcement, Office of	45, III
Children and Families, Administration for	45, II, III, IV, X, XIII
Civil Rights, Commission on	5, LXVIII; 45, VII
Civil Rights, Office for	34, I
Coast Guard	33, I; 46, I; 49, IV
Coast Guard (Great Lakes Pilotage)	46, III
Commerce, Department of	2, XIII; 44, IV; 50, VI
Census Bureau	15, I
Economic Affairs, Office of the Under-Secretary for	15, XV
Economic Analysis, Bureau of	15, VIII
Economic Development Administration	13, III
Emergency Management and Assistance	44, IV
Federal Acquisition Regulation	48, 13
Foreign-Trade Zones Board	15, IV
Industry and Security, Bureau of	15, VII
International Trade Administration	15, III; 19, III
National Institute of Standards and Technology	15, II; 37, IV
National Marine Fisheries Service	50, II, IV
National Oceanic and Atmospheric Administration	15, IX; 50, II, III, IV, VI
National Technical Information Service	15, XI
National Telecommunications and Information Administration	15, XXIII; 47, III, IV
National Weather Service	15, IX
Patent and Trademark Office, United States	37, I
Secretary of Commerce, Office of	15, Subtitle A
Commercial Space Transportation	14, III
Commodity Credit Corporation	7, XIV
Commodity Futures Trading Commission	5, XLI; 17, I
Community Planning and Development, Office of Assistant Secretary for	24, V, VI
Community Services, Office of	45, X
Comptroller of the Currency	12, I
Construction Industry Collective Bargaining Commission	29, IX
Consumer Financial Protection Bureau	5, LXXXIV; 12, X
Consumer Product Safety Commission	5, LXXI; 16, II
Copyright Royalty Board	37, III
Corporation for National and Community Service	2, XXII; 45, XII, XXV
Cost Accounting Standards Board	48, 99
Council on Environmental Quality	40, V
Council of the Inspectors General on Integrity and Efficiency	5, XCVIII
Court Services and Offender Supervision Agency for the District of Columbia	5, LXX; 28, VIII
Customs and Border Protection	19, I
Defense, Department of	2, XI; 5, XXVI; 32, Subtitle A; 40, VII
Advanced Research Projects Agency	32, I
Air Force Department	32, VII
Army Department	32, V; 33, II; 36, III; 48, 51
Defense Acquisition Regulations System	48, 2
Defense Intelligence Agency	32, I

Agency	CFR Title, Subtitle or Chapter
Defense Logistics Agency	32, I, XII; 48, 54
Engineers, Corps of	33, II; 36, III
National Imagery and Mapping Agency	32, I
Navy, Department of	32, VI; 48, 52
Secretary of Defense, Office of	2, XI; 32, I
Defense Contract Audit Agency	32, I
Defense Intelligence Agency	32, I
Defense Logistics Agency	32, XII; 48, 54
Defense Nuclear Facilities Safety Board	10, XVII
Delaware River Basin Commission	18, III
Denali Commission	45, IX
Disability, National Council on	5, C; 34, XII
District of Columbia, Court Services and Offender Supervision Agency for the	5, LXX; 28, VIII
Drug Enforcement Administration	21, II
East-West Foreign Trade Board	15, XIII
Economic Affairs, Office of the Under-Secretary for	15, XV
Economic Analysis, Bureau of	15, VIII
Economic Development Administration	13, III
Economic Research Service	7, XXXVII
Education, Department of	2, XXXIV; 5, LIII
Bilingual Education and Minority Languages Affairs, Office of	34, V
Career, Technical, and Adult Education, Office of	34, IV
Civil Rights, Office for	34, I
Educational Research and Improvement, Office of	34, VII
Elementary and Secondary Education, Office of	34, II
Federal Acquisition Regulation	48, 34
Postsecondary Education, Office of	34, VI
Secretary of Education, Office of	34, Subtitle A
Special Education and Rehabilitative Services, Office of	34, III
Educational Research and Improvement, Office of	34, VII
Election Assistance Commission	2, LVIII; 11, II
Elementary and Secondary Education, Office of	34, II
Emergency Oil and Gas Guaranteed Loan Board	13, V
Emergency Steel Guarantee Loan Board	13, IV
Employee Benefits Security Administration	29, XXV
Employees' Compensation Appeals Board	20, IV
Employees Loyalty Board	5, V
Employment and Training Administration	20, V
Employment Policy, National Commission for	1, IV
Employment Standards Administration	20, VI
Endangered Species Committee	50, IV
Energy, Department of	2, IX; 5, XXIII; 10, II, III, X
Federal Acquisition Regulation	48, 9
Federal Energy Regulatory Commission	5, XXIV; 18, I
Property Management Regulations	41, 109
Energy, Office of	7, XXIX
Engineers, Corps of	33, II; 36, III
Engraving and Printing, Bureau of	31, VI
Environmental Protection Agency	2, XV; 5, LIV; 40, I, IV, VII
Federal Acquisition Regulation	48, 15
Property Management Regulations	41, 115
Environmental Quality, Office of	7, XXXI
Equal Employment Opportunity Commission	5, LXII; 29, XIV
Equal Opportunity, Office of Assistant Secretary for	24, I
Executive Office of the President	3, I
Environmental Quality, Council on	40, V
Management and Budget, Office of	2, Subtitle A; 5, III, LXXVII; 14, VI; 48, 99
National Drug Control Policy, Office of	2, XXXVI; 21, III
National Security Council	32, XXI; 47, II
Presidential Documents	3
Science and Technology Policy, Office of	32, XXIV; 47, II
Trade Representative, Office of the United States	15, XX

Agency	CFR Title, Subtitle or Chapter
Export-Import Bank of the United States	2, XXXV; 5, LII; 12, IV
Family Assistance, Office of	45, II
Farm Credit Administration	5, XXXI; 12, VI
Farm Credit System Insurance Corporation	5, XXX; 12, XIV
Farm Service Agency	7, VII, XVIII
Federal Acquisition Regulation	48, 1
Federal Aviation Administration	14, I
Commercial Space Transportation	14, III
Federal Claims Collection Standards	31, IX
Federal Communications Commission	5, XXIX; 47, I
Federal Contract Compliance Programs, Office of	41, 60
Federal Crop Insurance Corporation	7, IV
Federal Deposit Insurance Corporation	5, XXII; 12, III
Federal Election Commission	5, XXXVII; 11, I
Federal Emergency Management Agency	44, I
Federal Employees Group Life Insurance Federal Acquisition Regulation	48, 21
Federal Employees Health Benefits Acquisition Regulation	48, 16
Federal Energy Regulatory Commission	5, XXIV; 18, I
Federal Financial Institutions Examination Council	12, XI
Federal Financing Bank	12, VIII
Federal Highway Administration	23, I, II
Federal Home Loan Mortgage Corporation	1, IV
Federal Housing Enterprise Oversight Office	12, XVII
Federal Housing Finance Agency	5, LXXX; 12, XII
Federal Labor Relations Authority	5, XIV, XLIX; 22, XIV
Federal Law Enforcement Training Center	31, VII
Federal Management Regulation	41, 102
Federal Maritime Commission	46, IV
Federal Mediation and Conciliation Service	29, XII
Federal Mine Safety and Health Review Commission	5, LXXIV; 29, XXVII
Federal Motor Carrier Safety Administration	49, III
Federal Permitting Improvement Steering Council	40, IX
Federal Prison Industries, Inc.	28, III
Federal Procurement Policy Office	48, 99
Federal Property Management Regulations	41, 101
Federal Railroad Administration	49, II
Federal Register, Administrative Committee of	1, I
Federal Register, Office of	1, II
Federal Reserve System	12, II
Board of Governors	5, LVIII
Federal Retirement Thrift Investment Board	5, VI, LXXVI
Federal Service Impasses Panel	5, XIV
Federal Trade Commission	5, XLVII; 16, I
Federal Transit Administration	49, VI
Federal Travel Regulation System	41, Subtitle F
Financial Crimes Enforcement Network	31, X
Financial Research Office	12, XVI
Financial Stability Oversight Council	12, XIII
Fine Arts, Commission of	45, XXI
Fiscal Service	31, II
Fish and Wildlife Service, United States	50, I, IV
Food and Drug Administration	21, I
Food and Nutrition Service	7, II
Food Safety and Inspection Service	9, III
Foreign Agricultural Service	7, XV
Foreign Assets Control, Office of	31, V
Foreign Claims Settlement Commission of the United States	45, V
Foreign Service Grievance Board	22, IX
Foreign Service Impasse Disputes Panel	22, XIV
Foreign Service Labor Relations Board	22, XIV
Foreign-Trade Zones Board	15, IV
Forest Service	36, II
General Services Administration	5, LVII; 41, 105
Contract Appeals, Board of	48, 61
Federal Acquisition Regulation	48, 5
Federal Management Regulation	41, 102

Agency	CFR Title, Subtitle or Chapter
Federal Property Management Regulations	41, 101
Federal Travel Regulation System	41, Subtitle F
General	41, 300
Payment From a Non-Federal Source for Travel Expenses	41, 304
Payment of Expenses Connected With the Death of Certain Employees	41, 303
Relocation Allowances	41, 302
Temporary Duty (TDY) Travel Allowances	41, 301
Geological Survey	30, IV
Government Accountability Office	4, I
Government Ethics, Office of	5, XVI
Government National Mortgage Association	24, III
Grain Inspection, Packers and Stockyards Administration	7, VIII; 9, II
Great Lakes St. Lawrence Seaway Development Corporation	33, IV
Gulf Coast Ecosystem Restoration Council	2, LIX; 40, VIII
Harry S. Truman Scholarship Foundation	45, XVIII
Health and Human Services, Department of	2, III; 5, XLV; 45, Subtitle A
Centers for Medicare & Medicaid Services	42, IV
Child Support Enforcement, Office of	45, III
Children and Families, Administration for	45, II, III, IV, X, XIII
Community Services, Office of	45, X
Family Assistance, Office of	45, II
Federal Acquisition Regulation	48, 3
Food and Drug Administration	21, I
Indian Health Service	25, V
Inspector General (Health Care), Office of	42, V
Public Health Service	42, I
Refugee Resettlement, Office of	45, IV
Homeland Security, Department of	2, XXX; 5, XXXVI; 6, I; 8, I
Coast Guard	33, I; 46, I; 49, IV
Coast Guard (Great Lakes Pilotage)	46, III
Customs and Border Protection	19, I
Federal Emergency Management Agency	44, I
Human Resources Management and Labor Relations Systems	5, XCVII
Immigration and Customs Enforcement Bureau	19, IV
Transportation Security Administration	49, XII
HOPE for Homeowners Program, Board of Directors of	24, XXIV
Housing, Office of, and Multifamily Housing Assistance Restructuring, Office of	24, IV
Housing and Urban Development, Department of	2, XXIV; 5, LXV; 24, Subtitle B
Community Planning and Development, Office of Assistant Secretary for	24, V, VI
Equal Opportunity, Office of Assistant Secretary for	24, I
Federal Acquisition Regulation	48, 24
Federal Housing Enterprise Oversight, Office of	12, XVII
Government National Mortgage Association	24, III
Housing—Federal Housing Commissioner, Office of Assistant Secretary for	24, II, VIII, X, XX
Housing, Office of, and Multifamily Housing Assistance Restructuring, Office of	24, IV
Inspector General, Office of	24, XII
Public and Indian Housing, Office of Assistant Secretary for	24, IX
Secretary, Office of	24, Subtitle A, VII
Housing—Federal Housing Commissioner, Office of Assistant Secretary for	24, II, VIII, X, XX
Housing, Office of, and Multifamily Housing Assistance Restructuring, Office of	24, IV
Immigration and Customs Enforcement Bureau	19, IV
Immigration Review, Executive Office for	8, V
Independent Counsel, Office of	28, VII
Independent Counsel, Offices of	28, VI
Indian Affairs, Bureau of	25, I, V
Indian Affairs, Office of the Assistant Secretary	25, VI

Agency	CFR Title, Subtitle or Chapter
Indian Arts and Crafts Board	25, II
Indian Health Service	25, V
Industry and Security, Bureau of	15, VII
Information Resources Management, Office of	7, XXVII
Information Security Oversight Office, National Archives and Records Administration	32, XX
Inspector General	
Agriculture Department	7, XXVI
Health and Human Services Department	42, V
Housing and Urban Development Department	24, XII, XV
Institute of Peace, United States	22, XVII
Inter-American Foundation	5, LXIII; 22, X
Interior, Department of	2, XIV
American Indians, Office of the Special Trustee	25, VII
Endangered Species Committee	50, IV
Federal Acquisition Regulation	48, 14
Federal Property Management Regulations System	41, 114
Fish and Wildlife Service, United States	50, I, IV
Geological Survey	30, IV
Indian Affairs, Bureau of	25, I, V
Indian Affairs, Office of the Assistant Secretary	25, VI
Indian Arts and Crafts Board	25, II
Land Management, Bureau of	43, II
National Indian Gaming Commission	25, III
National Park Service	36, I
Natural Resource Revenue, Office of	30, XII
Ocean Energy Management, Bureau of	30, V
Reclamation, Bureau of	43, I
Safety and Environmental Enforcement, Bureau of	30, II
Secretary of the Interior, Office of	2, XIV; 43, Subtitle A
Surface Mining Reclamation and Enforcement, Office of	30, VII
Internal Revenue Service	26, I
International Boundary and Water Commission, United States and Mexico, United States Section	22, XI
International Development, United States Agency for	22, II
Federal Acquisition Regulation	48, 7
International Development Cooperation Agency, United States	22, XII
International Development Finance Corporation, U.S.	5, XXXIII; 22, VII
International Joint Commission, United States and Canada	22, IV
International Organizations Employees Loyalty Board	5, V
International Trade Administration	15, III; 19, III
International Trade Commission, United States	19, II
Interstate Commerce Commission	5, XL
Investment Security, Office of	31, VIII
James Madison Memorial Fellowship Foundation	45, XXIV
Japan–United States Friendship Commission	22, XVI
Joint Board for the Enrollment of Actuaries	20, VIII
Justice, Department of	2, XXVIII; 5, XXVIII; 28, I, XI; 40, IV
Alcohol, Tobacco, Firearms, and Explosives, Bureau of	27, II
Drug Enforcement Administration	21, II
Federal Acquisition Regulation	48, 28
Federal Claims Collection Standards	31, IX
Federal Prison Industries, Inc.	28, III
Foreign Claims Settlement Commission of the United States	45, V
Immigration Review, Executive Office for	8, V
Independent Counsel, Offices of	28, VI
Prisons, Bureau of	28, V
Property Management Regulations	41, 128
Labor, Department of	2, XXIX; 5, XLII
Benefits Review Board	20, VII
Employee Benefits Security Administration	29, XXV
Employees' Compensation Appeals Board	20, IV
Employment and Training Administration	20, V
Federal Acquisition Regulation	48, 29

Agency	CFR Title, Subtitle or Chapter
Federal Contract Compliance Programs, Office of	41, 60
Federal Procurement Regulations System	41, 50
Labor-Management Standards, Office of	29, II, IV
Mine Safety and Health Administration	30, I
Occupational Safety and Health Administration	29, XVII
Public Contracts	41, 50
Secretary of Labor, Office of	29, Subtitle A
Veterans' Employment and Training Service, Office of the Assistant Secretary for	41, 61; 20, IX
Wage and Hour Division	29, V
Workers' Compensation Programs, Office of	20, I, VI
Labor-Management Standards, Office of	29, II, IV
Land Management, Bureau of	43, II
Legal Services Corporation	45, XVI
Libraries and Information Science, National Commission on	45, XVII
Library of Congress	36, VII
Copyright Royalty Board	37, III
U.S. Copyright Office	37, II
Management and Budget, Office of	5, III, LXXVII; 14, VI; 48, 99
Marine Mammal Commission	50, V
Maritime Administration	46, II
Merit Systems Protection Board	5, II, LXIV
Micronesian Status Negotiations, Office for	32, XXVII
Military Compensation and Retirement Modernization Commission	5, XCIX
Millennium Challenge Corporation	22, XIII
Mine Safety and Health Administration	30, I
Minority Business Development Agency	15, XIV
Miscellaneous Agencies	1, IV
Monetary Offices	31, I
Morris K. Udall Scholarship and Excellence in National Environmental Policy Foundation	36, XVI
Museum and Library Services, Institute of	2, XXXI
National Aeronautics and Space Administration	2, XVIII; 5, LIX; 14, V
Federal Acquisition Regulation	48, 18
National Agricultural Library	7, XLI
National Agricultural Statistics Service	7, XXXVI
National and Community Service, Corporation for	2, XXII; 45, XII, XXV
National Archives and Records Administration	2, XXVI; 5, LXVI; 36, XII
Information Security Oversight Office	32, XX
National Capital Planning Commission	1, IV, VI
National Counterintelligence Center	32, XVIII
National Credit Union Administration	5, LXXXVI; 12, VII
National Crime Prevention and Privacy Compact Council	28, IX
National Drug Control Policy, Office of	2, XXXVI; 21, III
National Endowment for the Arts	2, XXXII
National Endowment for the Humanities	2, XXXIII
National Foundation on the Arts and the Humanities	45, XI
National Geospatial-Intelligence Agency	32, I
National Highway Traffic Safety Administration	23, II, III; 47, VI; 49, V
National Imagery and Mapping Agency	32, I
National Indian Gaming Commission	25, III
National Institute of Food and Agriculture	7, XXXIV
National Institute of Standards and Technology	15, II; 37, IV
National Intelligence, Office of Director of	5, IV; 32, XVII
National Labor Relations Board	5, LXI; 29, I
National Marine Fisheries Service	50, II, IV
National Mediation Board	5, CI; 29, X
National Oceanic and Atmospheric Administration	15, IX; 50, II, III, IV, VI
National Park Service	36, I
National Railroad Adjustment Board	29, III
National Railroad Passenger Corporation (AMTRAK)	49, VII
National Science Foundation	2, XXV; 5, XLIII; 45, VI
Federal Acquisition Regulation	48, 25
National Security Council	32, XXI; 47, II

Agency	CFR Title, Subtitle or Chapter
National Technical Information Service	15, XI
National Telecommunications and Information Administration	15, XXIII; 47, III, IV, V
National Transportation Safety Board	49, VIII
Natural Resource Revenue, Office of	30, XII
Natural Resources Conservation Service	7, VI
Navajo and Hopi Indian Relocation, Office of	25, IV
Navy, Department of	32, VI
Federal Acquisition Regulation	48, 52
Neighborhood Reinvestment Corporation	24, XXV
Northeast Interstate Low-Level Radioactive Waste Commission	10, XVIII
Nuclear Regulatory Commission	2, XX; 5, XLVIII; 10, I
Federal Acquisition Regulation	48, 20
Occupational Safety and Health Administration	29, XVII
Occupational Safety and Health Review Commission	29, XX
Ocean Energy Management, Bureau of	30, V
Oklahoma City National Memorial Trust	36, XV
Operations Office	7, XXVIII
Patent and Trademark Office, United States	37, I
Payment From a Non-Federal Source for Travel Expenses	41, 304
Payment of Expenses Connected With the Death of Certain Employees	41, 303
Peace Corps	2, XXXVII; 22, III
Pennsylvania Avenue Development Corporation	36, IX
Pension Benefit Guaranty Corporation	29, XL
Personnel Management, Office of	5, I, IV, XXXV; 45, VIII
Federal Acquisition Regulation	48, 17
Federal Employees Group Life Insurance Federal Acquisition Regulation	48, 21
Federal Employees Health Benefits Acquisition Regulation	48, 16
Human Resources Management and Labor Relations Systems, Department of Homeland Security	5, XCVII
Pipeline and Hazardous Materials Safety Administration	49, I
Postal Regulatory Commission	5, XLVI; 39, III
Postal Service, United States	5, LX; 39, I
Postsecondary Education, Office of	34, VI
President's Commission on White House Fellowships	1, IV
Presidential Documents	3
Presidio Trust	36, X
Prisons, Bureau of	28, V
Privacy and Civil Liberties Oversight Board	6, X
Procurement and Property Management, Office of	7, XXXII
Public and Indian Housing, Office of Assistant Secretary for	24, IX
Public Contracts, Department of Labor	41, 50
Public Health Service	42, I
Railroad Retirement Board	20, II
Reclamation, Bureau of	43, I
Refugee Resettlement, Office of	45, IV
Relocation Allowances	41, 302
Research and Innovative Technology Administration	49, XI
Rural Business-Cooperative Service	7, XVIII, XLII
Rural Development Administration	7, XLII
Rural Housing Service	7, XVIII, XXXV
Rural Utilities Service	7, XVII, XVIII, XLII
Safety and Environmental Enforcement, Bureau of	30, II
Science and Technology Policy, Office of, and National Security Council	32, XXIV; 47, II
Secret Service	31, IV
Securities and Exchange Commission	5, XXXIV; 17, II
Selective Service System	32, XVI
Small Business Administration	2, XXVII; 13, I
Smithsonian Institution	36, V
Social Security Administration	2, XXIII; 20, III; 48, 23
Soldiers' and Airmen's Home, United States	5, XI
Special Counsel, Office of	5, VIII
Special Education and Rehabilitative Services, Office of	34, III

Agency	CFR Title, Subtitle or Chapter
State, Department of	2, VI; 22, I; 28, XI
Federal Acquisition Regulation	48, 6
Surface Mining Reclamation and Enforcement, Office of	30, VII
Surface Transportation Board	49, X
Susquehanna River Basin Commission	18, VIII
Tennessee Valley Authority	5, LXIX; 18, XIII
Trade Representative, United States, Office of	15, XX
Transportation, Department of	2, XII; 5, L
Commercial Space Transportation	14, III
Emergency Management and Assistance	44, IV
Federal Acquisition Regulation	48, 12
Federal Aviation Administration	14, I
Federal Highway Administration	23, I, II
Federal Motor Carrier Safety Administration	49, III
Federal Railroad Administration	49, II
Federal Transit Administration	49, VI
Great Lakes St. Lawrence Seaway Development Corporation	33, IV
Maritime Administration	46, II
National Highway Traffic Safety Administration	23, II, III; 47, IV; 49, V
Pipeline and Hazardous Materials Safety Administration	49, I
Secretary of Transportation, Office of	14, II; 49, Subtitle A
Transportation Statistics Bureau	49, XI
Transportation, Office of	7, XXXIII
Transportation Security Administration	49, XII
Transportation Statistics Bureau	49, XI
Travel Allowances, Temporary Duty (TDY)	41, 301
Treasury, Department of the	2, X; 5, XXI; 12, XV; 17, IV; 31, IX
Alcohol and Tobacco Tax and Trade Bureau	27, I
Community Development Financial Institutions Fund	12, XVIII
Comptroller of the Currency	12, I
Customs and Border Protection	19, I
Engraving and Printing, Bureau of	31, VI
Federal Acquisition Regulation	48, 10
Federal Claims Collection Standards	31, IX
Federal Law Enforcement Training Center	31, VII
Financial Crimes Enforcement Network	31, X
Fiscal Service	31, II
Foreign Assets Control, Office of	31, V
Internal Revenue Service	26, I
Investment Security, Office of	31, VIII
Monetary Offices	31, I
Secret Service	31, IV
Secretary of the Treasury, Office of	31, Subtitle A
Truman, Harry S. Scholarship Foundation	45, XVIII
United States Agency for Global Media	22, V
United States and Canada, International Joint Commission	22, IV
United States and Mexico, International Boundary and Water Commission, United States Section	22, XI
U.S. Copyright Office	37, II
U.S. Office of Special Counsel	5, CII
Utah Reclamation Mitigation and Conservation Commission	43, III
Veterans Affairs, Department of	2, VIII; 38, I
Federal Acquisition Regulation	48, 8
Veterans' Employment and Training Service, Office of the Assistant Secretary for	41, 61; 20, IX
Vice President of the United States, Office of	32, XXVIII
Wage and Hour Division	29, V
Water Resources Council	18, VI
Workers' Compensation Programs, Office of	20, I, VII
World Agricultural Outlook Board	7, XXXVIII

List of CFR Sections Affected

All changes in this volume of the Code of Federal Regulations (CFR) that were made by documents published in the FEDERAL REGISTER since January 1, 2016 are enumerated in the following list. Entries indicate the nature of the changes effected. Page numbers refer to FEDERAL REGISTER pages. The user should consult the entries for chapters, parts and subparts as well as sections for revisions.

For changes to this volume of the CFR prior to this listing, consult the annual edition of the monthly List of CFR Sections Affected (LSA). The LSA is available at *www.govinfo.gov*. For changes to this volume of the CFR prior to 2001, see the ''List of CFR Sections Affected, 1949–1963, 1964–1972, 1973–1985, and 1986–2000'' published in 11 separate volumes. The ''List of CFR Sections Affected 1986–2000'' is available at *www.govinfo.gov*.

2016

40 CFR

81 FR Page

Chapter I

1065.10 (c)(1)(ii) revised 74162
1065.15 (a)(2) revised 74162
1065.140 (d)(2) introductory text and (3) introductory text revised 74162
1065.170 Figure 1 revised 74162
1065.202 Introductory text revised 74162
1065.220 (a) introductory text revised 74162
1065.225 (a) introductory text revised 74163
1065.247 Added 74163
1065.260 (e) and (f) revised; (g) added 74163
1065.266 Added 74163
1065.267 (a) revised 74163
1065.275 (b)(2) revised 74163
1065.303 Revised 74164
1065.340 (e), (f)(8), (13), (g), (h) and Figure 1 revised 74165
1065.341 (c)(3) revised 74167
1065.345 (d)(2), (4), (e)(3) and (4) revised 74167
1065.360 (a)(3), (d) introductory text and (7) revised; (f) added 74168
1065.365 (d)(9), (e)(10), (f)(9) and (14) revised 74168
1065.366 Added 74168

40 CFR—Continued

81 FR Page

Chapter I—Continued

1065.370 (d)(11) revised 74168
1065.375 (b) revised 74168
1065.390 (b), (c) introductory text and (2) revised 74168
1065.510 (c) introductory text, (4), (d)(5)(i) and (iii) revised 74169
1065.546 (a) revised 74169
1065.590 (f)(2), (j) introductory text and (3) through (7) revised 74169
1065.602 (f)(1) introductory text, (2) introductory text and (j) revised 74170
1065.610 (a)(1)(ii), (iii), (vi), (2), (b), (c)(1) and (2) revised 74170
1065.640 (a) through (d) and (e)(3) revised 74172
1065.642 Revised 74177
1065.645 (c) and (d) revised 74179
1065.650 (c)(6) added; (e)(2), (f)(2), (4) and (g)(2)(ii) revised 74180
1065.655 (e) and (f) redesignated as (f) and (g); new (e) added; (a), (b), (c) introductory text, (3), (d) and new (f)(3) revised 74182
1065.660 (c) redesignated as (d); heading, (a)(2), (3), (b)(3) and new (d) revised; (a)(4), (b)(4), new (c) and (e) added 74184
1065.665 (a) and (b) revised 74187
1065.667 (c) revised 74188

40 CFR—Continued

81 FR Page

Chapter I—Continued

1065.670 Second introductory text removed; CFR correction 43101
1065.675 (d) revised 74188
1065.680 Added 74189
1065.690 (c) revised 74191
1065.735 Added 74191
1065.750 (a)(3)(xii) and (xiii) added 74191
1065.1001 Amended 74191
1065.1005 (a), (b) and (f)(2) revised 74191
1065.1010 (b) and (e) revised 74193
1065.1105 (a) and (c)(4) revised 74195
1065.1107 (a)(1), (2) and (b) introductory text revised 74195
1065.1109 (a)(1) and (b)(4) introductory text revised 74195
1066.105 (c)(2) introductory text, (i), (iv), (v), (5)(i), (iii) and (d) revised 74195
1066.110 (b)(1)(ii) through (vii) redesignated as (b)(1)(iii) through (viii); new (b)(1)(ii) and (2)(iii)(C) added; (b)(1)(i), new (vii), (2)(i)(B) and (c) revised 74196
1066.135 (d)(1) revised 74197
1066.140 (e), (f)(6)(i), (8), (13), (g)(6)(i), (11), (h) introductory text, (6)(i), (7), (9), (10) and Figure 1 revised; (j) redesignated as (i) 74197
1066.210 (d)(3) revised 74198
1066.235 (c)(1)(ii) and (2)(i) revised 74199
1066.245 (c) introductory text revised 74199
1066.250 (c)(1), (2) and (5) revised 74199
1066.260 (c)(3) and (4) revised 74200
1066.265 (c) and (d) revised 74200
1066.270 (c)(2), (4), (6) and (d)(1) revised 74201
1066.275 (c)(1) revised 74201
1066.301 Introductory text added 74201
1066.305 (a) revised 74202
1066.310 introductory text, (b)(1)(i), (2), (6), (7)(ii) introductory text, (A), (B), (D) and (E) revised 74202
1066.410 (c) and (h) introductory text revised 74202
1066.415 (e)(6)(ii) revised 74202
1066.425 (b)(1), (2) and (3) revised 74203

40 CFR—Continued

81 FR Page

Chapter I—Continued

1066.605 (c) introductory text and (d) through (g) revised; (h) added 74203
1066.615 (a)(1) revised 74207
1066.625 introductory text, (a)(1), (b) introductory text, (1), (2)(i), (iv)(A), (D), (v), (vi), (vii), (xiii), (c)(1)(i), (ii) and (iii) revised 74208
1066.630 Revised 74211
1066.635 (a) and (c) introductory text revised 74212
1066.695 (f) revised 74213
1066.710 (a)(5) and (d)(3) introductory text revised 74213
1066.801 (c)(2) and (3) revised 74213
1066.805 (c) revised 74213
1066.815 (b) introductory text, (4) and (5) revised 74213
1066.820 (c) revised 74214
1066.835 (f)(3)(iv) revised 74214
1066.985 (d)(8) revised 74215
1066.1005 (a) revised 74215
1066.1010 Undesignated text following (a) introductory text removed; (b)(1) revised 74217
1068 Policy statement 54422
1068.1 Revised 74217
1068.10 Heading revised 74217
1068.15 Heading and (a) revised 74217
1068.20 (b) and (c) removed; (d), (e) and (f) redesignated as new (b), (c) and (d) 74217
1068.27 Revised 74217
1068.30 Revised 74218
1068.31 Heading, introductory text and (c) revised 74221
1068.32 Added 74221
1068.35 Heading revised 74222
1068.40 Heading and (a) revised; (c) removed 74222
1068.45 (e) revised; (g) and (h) added 74222
1068.95 Revised 74222
1068.101 Introductory text, (a)(1), (2), (3), (b)(1) introductory text, (2), (3), (4), (5) introductory text, (6) and (h) introductory text revised 74222
1068.103 Revised 74224
1068.105 (a) and (c)(2) revised 74225
1068.110 Heading and (d) revised 74225
1068.115 Heading revised 74225
1068.120 Heading and (f) revised 74225

40 CFR—Continued

81 FR Page

Chapter I—Continued

1068.125 (b) introductory text revised 74226
1068.201 Heading, introductory text, (a) and (c) revised 74226
1068.210 Heading and (e) revised 74226
1068.215 Heading, (a) and (c)(3)(iv) revised 74226
1068.220 Revised 74226
1068.225 Revised 74227
1068.230 Heading, (b) and (c) revised 74227
1068.235 Revised 74227
1068.240 Heading, (b)(3), (c)(1), (3), (d)(2)(ii) and (e) introductory text revised 74227
1068.245 Heading and (g)(4) revised 74228
1068.250 Heading, (c) introductory text and (k)(4) revised; (h) removed 74228
1068.255 Heading and (a) introductory text revised 74228
1068.260 Revised 74228
1068.261 Heading and (a) revised 74229
1068.262 Revised 74229
1068.265 Heading revised 74231
1068.301 Heading, (b) and (d) revised; (e) added 74231
1068.305 (b)(1) and (2) revised 74231
1068.310 Heading and (a) revised 74231
1068.315 Heading and (i) revised 74231
1068.325 Heading, introductory text, (a), (c), (d) and (j)(5) revised 74231
1068.335 Heading revised 74231
1068.360 Heading and (b) revised 74231
1068.401 Revised 74232
1068.405 (a)(1) revised 74232
1068.415 (c) and (d) revised 74232
1068.420 (b) and (e) revised 74232
1068.425 (b) revised 74232
1068.430 (c) revised 74232
1068.450 (b) revised 74232
1068.501 (a)(1)(iv), (8) and (b)(1)(iii) revised 74232
1068.505 (a), (c) and (g) revised 74233
1068.510 (a)(6), (b) and (h) revised 74233
1068.515 (a) and (c) revised 74233
1068.520 (b) revised 74233

40 CFR—Continued

81 FR Page

Chapter I—Continued

1068.530 Introductory text revised 74233
1068.601—1068.650 (Subpart G) Revised 74233
1068 Appendix I amended 74235

Chapter VIII

1800.1 Regulation at 80 FR 77584 eff. date confirmed 21478
1800.100—1800.500 (Subpart C) Regulation at 80 FR 77584 eff. date confirmed 21478

2017

40 CFR

82 FR Page

Chapter I

1601 Revised 45502
Regulation at 82 FR 45502 confirmed 57875
1700.2 (a) revised 3182
Regulation at 82 FR 3182 eff. date delayed to 3-21-17 9682
1700.3 Amended 3182
Regulation at 82 FR 3182 eff. date delayed to 3-21-17 9682
1700.14—1700.42 (Subpart D) Revised 3183
Regulation at 82 FR 3183 eff. date delayed to 3-21-17 9682

2018

40 CFR

83 FR Page

Chapter I

790.45 (c)(7) and (g) added 52723
790.59 (c) added 52723
790.60 (a)(18) and (d) added 52724
790.65 (b) revised 52724
791.39 (a)(3) removed; (b) revised 52724

2019

40 CFR

84 FR Page

Chapter I

1065.670 (a) introductory text reinstated; CFR correction 9243

2020

40 CFR

85 FR Page

Chapter I

1065.701 (d)(2) revised 78468

40 CFR—Continued

85 FR Page

Chapter I—Continued

1065.703 Table 1 revised 78468
1065.705 Introductory text amended 78468
1065.725 (c) amended 78468
1065.1010 (a) amended; (b)(19), (35), and (46) revised 78468
1068.230 CFR correction; (c)(1) and (2) removed 38332
1090 Added 78469

Chapter V

1500—1508 (Subchapter A) Heading added 43357
1500 Revised 43357
1501 Revised 43359
1502 Revised 43363
1503 Revised 43367
1504 Revised 43368
1505 Revised 43369
1506 Revised 43370
1507 Revised 43373
1508 Revised 43374
1515—1518 (Subchapter B) Heading added 43376

Chapter VI

1604 Added 10094

Chapter VII

1700.3 Amended 43475
1700.15 Added 43475
1700.19 Added 43475
1700.20 Added 43475
1700.24 Added 43476
1700.26 Added 43476
1700.27 Added 43476
1700.28 Added 43476
1700.34 Added 43476
1700.35 Added 43477
1700.36 Added 43477
1700.37 Added 43477

2021

(Regulations published from January 1, 2021, through July 1, 2021)

40 CFR

86 FR Page

Chapter I

1060.1 (a)(7), (c), and (d) revised; eff. 7-29-21 34527
1060.5 (a)(1) revised; eff. 7-29-21 34528
1060.30 Revised; eff. 7-29-21 34528
1060.104 (b)(3) revised; eff. 7-29-21 34528
1060.105 (c)(1) and (e) revised; eff. 7-29-21 34528

40 CFR—Continued

86 FR Page

Chapter I—Continued

1060.120 (b) and (c) revised; eff. 7-29-21 34528
1060.130 (b)(3) revised; eff. 7-29-21 34528
1060.135 Introductory text, (a), (b) introductory text, (2), (3), and (4) revised; eff. 7-29-21 34529
1060.137 (a)(4) and (c)(1) revised; eff. 7-29-21 34529
1060.205 (a) and (m) revised; eff. 7-29-21 34529
1060.225 (b) and (g) revised; (h) added; eff. 7-29-21 34529
1060.230 (d)(2) revised; eff. 7-29-21 34529
1060.235 Heading, (d), and (e)(1) revised; (a) and (b) redesignated as (b) and (a); eff. 7-29-21 34529
1060.240 (e)(2)(i) revised; eff. 7-29-21 34530
1060.250 (a)(3)(ii) and (b) revised; eff. 7-29-21 34530
1060.255 Revised; eff. 7-29-21 34530
1060.501 (c) revised; eff. 7-29-21 34530
1060.505 (c)(3) revised; eff. 7-29-21 34531
1060.515 (a)(2) revised; eff. 7-29-21 34531
1060.520 (a), (b)(1), (4), (d)(3), (6), (8)(ii), (9), and (e) revised; eff. 7-29-21 34531
1060.525 (a)(2) revised; eff. 7-29-21 34531
1060.601 (a) and (b)(2) revised; eff. 7-29-21 34532
1060.610 Added; eff. 7-29-21 34532
1060.640 Removed; eff. 7-29-21 34532
1060.801 Amended; eff. 7-29-21 34532
1060.810 (d) removed; (e) introductory text revised; eff. 7-29-21 34533
1060.815 Revised; eff. 7-29-21 34533
1060.825 Revised; eff. 7-29-21 34533
1065.1 (g) revised; eff. 7-29-21 34533
1065.2 (c) revised; eff. 7-29-21 34533
1065.130 (e) revised; eff. 7-29-21 34534
1065.140 (c)(6)(i) and (e)(2) revised; eff. 7-29-21 34534
1065.145 (e)(3)(i) revised; eff. 7-29-21 34534
1065.170 (a)(1) introductory text revised; eff. 7-29-21 34534
1065.205 Revised; eff. 7-29-21 34534
1065.220 (a) introductory text revised; eff. 7-29-21 34536
1065.225 (a) introductory text revised; eff. 7-29-21 34536

40 CFR—Continued

86 FR Page

Chapter I—Continued

1065.247 Revised; eff. 7-29-21 34536
1065.260 (e) revised; eff. 7-29-21 34536
1065.266 (a) and (b) revised; eff. 7-29-21 34536
1065.275 (b)(2) revised; eff. 7-29-21 34536
1065.280 (a) revised; eff. 7-29-21 34536
1065.303 Revised; eff. 7-29-21 34536
1065.307 Table 1 designated as (f); (c)(13), (d)(4), (6)(i), (7), (9), (e)(3), (5), and new (f) revised; (e)(7)(i)(F), (G), and (g) added; eff. 7-29-21 34538
1065.309 (d)(2) revised; eff. 7-29-21 34541
1065.320 (b) removed; eff. 7-29-21 34541
1065.341 Revised; eff. 7-29-21 34541
1065.342 (d)(2) revised; eff. 7-29-21 34543
1065.350 (d)(2) revised; eff. 7-29-21 34543
1065.355 (d)(2) revised; eff. 7-29-21 34543
1065.360 (a)(4) and (d)(12) added; eff. 7-29-21 34543
1065.365 (a), (d), (f)(9), and (14) revised; eff. 7-29-21 34543
1065.370 (e)(5) revised; eff. 7-29-21 34545
1065.375 (d)(2) revised; eff. 7-29-21 34545
1065.410 (c) and (d) revised; eff. 7-29-21 34545
1065.510 (a) introductory text, (b)(5)(i), and (f)(4)(i) revised; (c)(5) added; eff. 7-29-21 34545
1065.512 (b)(1) and (2) revised; eff. 7-29-21 34546
1065.514 (e) introductory text, (e)(3), and (f)(3) revised; eff. 7-29-21 34546
1065.530 (a)(2)(iii) revised; (g)(5) added; eff. 7-29-21 34546
1065.543 Added; eff. 7-29-21 34547
1065.545 (a) and (b) introductory text revised; eff. 7-29-21 34548
1065.602 Revised; eff. 7-29-21 34548
1065.610 (a)(1)(iv), (2) introductory text, and (d)(3) introductory text revised; eff. 7-29-21 34555
1065.640 (a), (b)(3), (d)(1), and (3) revised; eff. 7-29-21 34556
1065.642 (b) and (c)(1) revised; eff. 7-29-21 34557
1065.643 Added; eff. 7-29-21 34557

40 CFR—Continued

86 FR Page

Chapter I—Continued

1065.650 (b)(3) introductory text, (c)(1), (2)(i) introductory text, (3), (d) introductory text, (7), (f)(2) introductory text, and (g) revised; eff. 7-29-21 34560
1065.655 Heading, (a), (c) introductory text, (3), (d) introductory text, (e), and (f)(3) revised; eff. 7-29-21 34563
1065.659 (c)(2) and (3) revised; eff. 7-29-21 34566
1065.660 (a)(5) and (6) added; (b)(2) introductory text, (ii) introductory text, (iii) introductory text, (3) introductory text, (4), (c)(2), (d) introductory text, (1) introductory text, (ii) introductory text, (iii) introductory text, (2), and (e) revised; eff. 7-29-21 34566
1065.665 (a) revised; eff. 7-29-21 34567
1065.667 (d) revised; eff. 7-29-21 34567
1065.675 (d) revised; eff. 7-29-21 34568
1065.695 (c)(8)(v) added; eff. 7-29-21 34568
1065.701 (b) and (f) revised; eff. 7-29-21 34568
1065.703 (b) revised; eff. 7-29-21 34569
1065.705 (c) revised; eff. 7-29-21 34569
1065.710 (b)(2) and (c) revised; eff. 7-29-21 34571
1065.715 (a) revised; eff. 7-29-21 34573
1065.720 (a) revised; eff. 7-29-21 34573
1065.750 (a)(1)(ii) revised; eff. 7-29-21 34574
1065.790 (b) revised; eff. 7-29-21 34574
1065.905 (f) revised; eff. 7-29-21 34574
1065.910 (a)(2) revised; eff. 7-29-21 34575
1065.915 (a) revised; eff. 7-29-21 34575
1065.1001 Amended; eff. 7-29-21 34575
1065.1005 (a), (c), (d), (e), (f)(2), and (g) revised; eff. 7-29-21 34575
1065.1010 (b) revised; eff. 7-29-21 34579
1066.1 (g) revised; eff. 7-29-21 34581
1066.135 (a)(1) revised; eff. 7-29-21 34581
1066.210 (d)(3) revised; eff. 7-29-21 34581
1066.255 (c) revised; eff. 7-29-21 34581
1066.260 (c)(4) revised; eff. 7-29-21 34581
1066.265 (d)(1) revised; eff. 7-29-21 34581
1066.270 (c)(4) and (d)(2) revised; eff. 7-29-21 34582

40 CFR—Continued

86 FR Page

Chapter I—Continued

1066.275 (b) and (d) revised; eff. 7-29-21 34582
1066.405 Revised; eff. 7-29-21 34582
1066.420 (d) revised; eff. 7-29-21 34582
1066.605 (c)(4) and (h)(2)(i) revised; eff. 7-29-21 34583
1066.610 (d) revised; eff. 7-29-21 34583
1066.710 (c) revised; eff. 7-29-21 34583
1066.801 (e) revised; eff. 7-29-21 34583
1066.835 (a) and (f)(2) revised; eff. 7-29-21 34585
1066.930 Revised; eff. 7-29-21 34585
1066.1005 (a), (c), (d), (e), and (f) revised; eff. 7-29-21 34585
1068.1 (a) amended; (d)(2) removed; eff. 7-29-21 34588

40 CFR—Continued

86 FR Page

Chapter I—Continued

1068.10 Heading, (b), and (c) revised; eff. 7-29-21 34589
1068.240 (b)(6), (c)(1), and (3) revised; eff. 7-29-21 34589
1074.1—1074.12 (Subpart A) Appendix A amended; eff. 7-29-21 34590

Chapter V

1507.3 (b) introductory text amended; interim 34158
1519 Added 1279
1519 Removed 19151

Chapter IX

Chapter IX Added 1287