AUTHENTICATED
U.S. GOVERNMENT
INFORMATION
GPO

elsewhere in this part. To do this, you must file a written request, including a description of your objection and any supporting data, within 30 days after we make a decision.

(b) For a hearing you request under the provisions of this part, we will approve your request if we find that your request raises a substantial factual issue.

(c) If we agree to hold a hearing, we will use the procedures specified in 40 CFR part 1068, subpart G.

§ 1060.825 What reporting and recordkeeping requirements apply under this part?

Under the Paperwork Reduction Act (44 U.S.C. 3501 *et seq*), the Office of Management and Budget approves the reporting and recordkeeping specified in the applicable regulations. The following items illustrate the kind of reporting and recordkeeping we require for products regulated under this part:

(a) We specify the following requirements related to equipment certification in this part 1060:

(1) In 40 CFR 1060.20 we give an overview of principles for reporting information.

(2) In 40 CFR part 1060, subpart C, we identify a wide range of information required to certify engines.

(3) In 40 CFR 1060.301 we require manufacturers to make engines or equipment available for our testing if we make such a request.

(4) In 40 CFR 1060.505 we specify information needs for establishing various changes to published test procedures.

(b) We specify the following requirements related to the general compliance provisions in 40 CFR part 1068:

(1) In 40 CFR 1068.5 we establish a process for evaluating good engineering judgment related to testing and certification.

(2) In 40 CFR 1068.25 we describe general provisions related to sending and keeping information.

(3) In 40 CFR 1068.27 we require manufacturers to make equipment available for our testing or inspection if we make such a request.

(4) In 40 CFR 1068.105 we require equipment manufacturers to keep certain records related to duplicate labels from engine manufacturers.

(5) [Reserved]

(6) In 40 CFR part 1068, subpart C, we identify several reporting and recordkeeping items for making demonstrations and getting approval related to various exemptions.

(7) In 40 CFR part 1068, subpart D, we identify several reporting and recordkeeping items for making demonstrations and getting approval related to importing equipment.

(8) In 40 CFR 1068.450 and 1068.455 we specify certain records related to testing production-line products in a selective enforcement audit.

(9) In 40 CFR 1068.501 we specify certain records related to investigating and reporting emission-related defects.

(10) In 40 CFR 1068.525 and 1068.530 we specify certain records related to recalling nonconforming equipment.

EFFECTIVE DATE NOTE: At 86 FR 34533, June 29, 2021, § 1060.825 was revised, effective July 29, 2021.

PART 1065—ENGINE-TESTING PROCEDURES

Subpart A—Applicability and General Provisions

Sec.

1065.1 Applicability.
1065.2 Submitting information to EPA under this part.
1065.5 Overview of this part 1065 and its relationship to the standard-setting part.
1065.10 Other procedures.
1065.12 Approval of alternate procedures.
1065.15 Overview of procedures for laboratory and field testing.
1065.20 Units of measure and overview of calculations.
1065.25 Recordkeeping.

Subpart B—Equipment Specifications

1065.101 Overview.
1065.110 Work inputs and outputs, accessory work, and operator demand.
1065.120 Fuel properties and fuel temperature and pressure.
1065.122 Engine cooling and lubrication.
1065.125 Engine intake air.
1065.127 Exhaust gas recirculation.
1065.130 Engine exhaust.
1065.140 Dilution for gaseous and PM constituents.
1065.145 Gaseous and PM probes, transfer lines, and sampling system components.
1065.150 Continuous sampling.
1065.170 Batch sampling for gaseous and PM constituents.

1065.190 PM-stabilization and weighing environments for gravimetric analysis.
1065.195 PM-stabilization environment for in-situ analyzers.

Subpart C—Measurement Instruments

1065.201 Overview and general provisions.
1065.202 Data updating, recording, and control.
1065.205 Performance specifications for measurement instruments.

MEASUREMENT OF ENGINE PARAMETERS AND AMBIENT CONDITIONS

1065.210 Work input and output sensors.
1065.215 Pressure transducers, temperature sensors, and dewpoint sensors.

FLOW-RELATED MEASUREMENTS

1065.220 Fuel flow meter.
1065.225 Intake-air flow meter.
1065.230 Raw exhaust flow meter.
1065.240 Dilution air and diluted exhaust flow meters.
1065.245 Sample flow meter for batch sampling.
1065.247 Diesel exhaust fluid flow rate.
1065.248 Gas divider.

CO AND CO_2 MEASUREMENTS

1065.250 Nondispersive infrared analyzer.

HYDROCARBON MEASUREMENTS

1065.260 Flame ionization detector.
1065.265 Nonmethane cutter.
1065.266 Fourier transform infrared analyzer.
1065.267 Gas chromatograph with a flame ionization detector.
1065.269 Photoacoustic analyzer for ethanol and methanol.

NO_X AND N_2O MEASUREMENTS

1065.270 Chemiluminescent detector.
1065.272 Nondispersive ultraviolet analyzer.
1065.275 N_2O measurement devices.

O_2 MEASUREMENTS

1065.280 Paramagnetic and magnetopneumatic O_2 detection analyzers.

AIR-TO-FUEL RATIO MEASUREMENTS

1065.284 Zirconia (ZrO_2) analyzer.

PM MEASUREMENTS

1065.290 PM gravimetric balance.
1065.295 PM inertial balance for field-testing analysis.

Subpart D—Calibrations and Verifications

1065.301 Overview and general provisions.
1065.303 Summary of required calibration and verifications.
1065.305 Verifications for accuracy, repeatability, and noise.
1065.307 Linearity verification.
1065.308 Continuous gas analyzer system-response and updating-recording verification—for gas analyzers not continuously compensated for other gas species.
1065.309 Continuous gas analyzer system-response and updating-recording verification—for gas analyzers continuously compensated for other gas species.

MEASUREMENT OF ENGINE PARAMETERS AND AMBIENT CONDITIONS

1065.310 Torque calibration.
1065.315 Pressure, temperature, and dewpoint calibration.

FLOW-RELATED MEASUREMENTS

1065.320 Fuel-flow calibration.
1065.325 Intake-flow calibration.
1065.330 Exhaust-flow calibration.
1065.340 Diluted exhaust flow (CVS) calibration.
1065.341 CVS, PFD, and batch sampler verification (propane check).
1065.342 Sample dryer verification.
1065.345 Vacuum-side leak verification.

CO AND CO_2 MEASUREMENTS

1065.350 H_2O interference verification for CO_2 NDIR analyzers.
1065.355 H_2O and CO_2 interference verification for CO NDIR analyzers.

HYDROCARBON MEASUREMENTS

1065.360 FID optimization and verification.
1065.362 Non-stoichiometric raw exhaust FID O_2 interference verification.
1065.365 Nonmethane cutter penetration fractions.
1065.366 Interference verification for FTIR analyzers.
1065.369 H_2O, CO, and CO_2 interference verification for photoacoustic alcohol analyzers.

NO_X AND N_2O MEASUREMENTS

1065.370 CLD CO_2 and H_2O quench verification.
1065.372 NDUV analyzer HC and H_2O interference verification.
1065.375 Interference verification for N_2O analyzers.
1065.376 Chiller NO_2 penetration.
1065.378 NO_2-to-NO converter conversion verification.

PM MEASUREMENTS

1065.390 PM balance verifications and weighing process verification.
1065.395 Inertial PM balance verifications.

Subpart E—Engine Selection, Preparation, and Maintenance

1065.401 Test engine selection.
1065.405 Test engine preparation and maintenance.
1065.410 Maintenance limits for stabilized test engines.
1065.415 Durability demonstration.

Subpart F—Performing an Emission Test Over Specified Duty Cycles

1065.501 Overview.
1065.510 Engine mapping.
1065.512 Duty cycle generation.
1065.514 Cycle-validation criteria for operation over specified duty cycles.
1065.516 Sample system decontamination and preconditioning.
1065.518 Engine preconditioning.
1065.520 Pre-test verification procedures and pre-test data collection.
1065.525 Engine starting, restarting, and shutdown.
1065.526 Repeating of void modes or test intervals.
1065.530 Emission test sequence.
1065.543 Carbon balance error verification.
1065.545 Verification of proportional flow control for batch sampling.
1065.546 Verification of minimum dilution ratio for PM batch sampling.
1065.550 Gas analyzer range verification and drift verification.
1065.590 PM sampling media (e.g., filters) preconditioning and tare weighing.
1065.595 PM sample post-conditioning and total weighing.

Subpart G—Calculations and Data Requirements

1065.601 Overview.
1065.602 Statistics.
1065.610 Duty cycle generation.
1065.630 Local acceleration of gravity.
1065.640 Flow meter calibration calculations.
1065.642 PDP, SSV, and CFV molar flow rate calculations.
1065.643 Carbon balance error verification calculations.
1065.644 Vacuum-decay leak rate.
1065.645 Amount of water in an ideal gas.
1065.650 Emission calculations.
1065.655 Chemical balances of fuel, intake air, and exhaust.
1065.659 Removed water correction.
1065.660 THC, NMHC, NMNEHC, CH_4, and C_2H_6 determination.
1065.665 THCE and NMHCE determination.
1065.667 Dilution air background emission correction.
1065.670 NO_X intake-air humidity and temperature corrections.
1065.672 Drift correction.
1065.675 CLD quench verification calculations.
1065.680 Adjusting emission levels to account for infrequently regenerating aftertreatment devices.
1065.690 Buoyancy correction for PM sample media.
1065.695 Data requirements.

Subpart H—Engine Fluids, Test Fuels, Analytical Gases and Other Calibration Standards

1065.701 General requirements for test fuels.
1065.703 Distillate diesel fuel.
1065.705 Residual and intermediate residual fuel.
1065.710 Gasoline.
1065.715 Natural gas.
1065.720 Liquefied petroleum gas.
1065.725 High-level ethanol-gasoline blends.
1065.735 Diesel exhaust fluid.
1065.740 Lubricants.
1065.745 Coolants.
1065.750 Analytical gases.
1065.790 Mass standards.

Subpart I—Testing with Oxygenated Fuels

1065.801 Applicability.
1065.805 Sampling system.
1065.845 Response factor determination.
1065.850 Calculations.

Subpart J—Field Testing and Portable Emission Measurement Systems

1065.901 Applicability.
1065.905 General provisions.
1065.910 PEMS auxiliary equipment for field testing.
1065.915 PEMS instruments.
1065.920 PEMS calibrations and verifications.
1065.925 PEMS preparation for field testing.
1065.930 Engine starting, restarting, and shutdown.
1065.935 Emission test sequence for field testing.
1065.940 Emission calculations.

Subpart K—Definitions and Other Reference Information

1065.1001 Definitions.
1065.1005 Symbols, abbreviations, acronyms, and units of measure.
1065.1010 Incorporation by reference.

Subpart L—Methods for Unregulated and Special Pollutants

1065.1101 Applicability.
1065.1102 Semi-Volatile Organic Compounds
1065.1103 General provisions for SVOC measurement.
1065.1105 Sampling system design.

1065.1107 Sample media and sample system preparation; sampler assembly.
1065.1109 Post-test sampler disassembly and sample extraction.
1065.1111 Sample analysis.

AUTHORITY: 42 U.S.C. 7401–7671q.

SOURCE: 70 FR 40516, July 13, 2005, unless otherwise noted.

Subpart A—Applicability and General Provisions

§ 1065.1 Applicability.

(a) This part describes the procedures that apply to testing we require for the following engines or for vehicles using the following engines:

(1) Locomotives we regulate under 40 CFR part 1033. For earlier model years, manufacturers may use the test procedures in this part or those specified in 40 CFR part 92 according to § 1065.10.

(2) Model year 2010 and later heavy-duty highway engines we regulate under 40 CFR part 86. For earlier model years, manufacturers may use the test procedures in this part or those specified in 40 CFR part 86, subpart N, according to § 1065.10.

(3) Nonroad diesel engines we regulate under 40 CFR part 1039 and stationary compression-ignition engines that are certified to the standards in 40 CFR part 1039, as specified in 40 CFR part 60, subpart IIII. For earlier model years, manufacturers may use the test procedures in this part or those specified in 40 CFR part 89 according to § 1065.10.

(4) Marine diesel engines we regulate under 40 CFR part 1042 and stationary compression-ignition engines that are certified to the standards in 40 CFR part 1042, as specified in 40 CFR part 60, subpart IIII. For earlier model years, manufacturers may use the test procedures in this part or those specified in 40 CFR part 94 according to § 1065.10.

(5) Marine spark-ignition engines we regulate under 40 CFR part 1045. For earlier model years, manufacturers may use the test procedures in this part or those specified in 40 CFR part 91 according to § 1065.10.

(6) Large nonroad spark-ignition engines we regulate under 40 CFR part 1048, and stationary engines that are certified to the standards in 40 CFR part 1048 or as otherwise specified in 40 CFR part 60, subpart JJJJ.

(7) Vehicles we regulate under 40 CFR part 1051 (such as snowmobiles and off-highway motorcycles) based on engine testing. See 40 CFR part 1051, subpart F, for standards and procedures that are based on vehicle testing.

(8) Small nonroad spark-ignition engines we regulate under 40 CFR part 1054 and stationary engines that are certified to the standards in 40 CFR part 1054 as specified in 40 CFR part 60, subpart JJJJ. For earlier model years, manufacturers may use the test procedures in this part or those specified in 40 CFR part 90 according to § 1065.10.

(b) The procedures of this part may apply to other types of engines, as described in this part and in the standard-setting part.

(c) The term ''you'' means anyone performing testing under this part other than EPA.

(1) This part is addressed primarily to manufacturers of engines, vehicles, equipment, and vessels, but it applies equally to anyone who does testing under this part for such manufacturers.

(2) This part applies to any manufacturer or supplier of test equipment, instruments, supplies, or any other goods or services related to the procedures, requirements, recommendations, or options in this part.

(d) Paragraph (a) of this section identifies the parts of the CFR that define emission standards and other requirements for particular types of engines. In this part, we refer to each of these other parts generically as the ''standard-setting part.'' For example, 40 CFR part 1051 is always the standard-setting part for snowmobiles. Note that while 40 CFR part 86 is the standard-setting part for heavy-duty highway engines, this refers specifically to 40 CFR part 86, subpart A, and to certain portions of 40 CFR part 86, subpart N, as described in 40 CFR 86.1301.

(e) Unless we specify otherwise, the terms ''procedures'' and ''test procedures'' in this part include all aspects of engine testing, including the equipment specifications, calibrations, calculations, and other protocols and procedural specifications needed to measure emissions.

(f) For vehicles, equipment, or vessels subject to this part and regulated under vehicle-based, equipment-based, or vessel-based standards, use good engineering judgment to interpret the term ''engine'' in this part to include vehicles, equipment, or vessels, where appropriate.

(g) For additional information regarding these test procedures, visit our Web site at *http://www.epa.gov*, and in particular *http://www.epa.gov/nvfel/testing/regulations.htm*.

(h) This part describes procedures and specifications for measuring an engine's exhaust emissions. While the measurements are geared toward engine-based measurements (in units of g/kW · hr), many of these provisions apply equally to vehicle-based measurements (in units of g/mile or g/kilometer). 40 CFR part 1066 describes the analogous procedures for vehicle-based emission measurements, and in many cases states that specific provisions of this part 1065 also apply for those vehicle-based measurements. Where material from this part 1065 applies for vehicle-based measurements under 40 CFR part 1066, it is sometimes necessary to include parenthetical statements in this part 1065 to properly cite secondary references that are different for vehicle-based testing. See 40 CFR part 1066 and the standard-setting part for additional information.

[73 FR 37288, June 30, 2008, as amended at 73 FR 59321, Oct. 8, 2008; 75 FR 23028, Apr. 30, 2010; 76 FR 37977, June 28, 2011; 76 FR 57437, Sept. 15, 2011; 79 FR 23752, Apr. 28, 2014]

EFFECTIVE DATE NOTE: At 86 FR 34533, June 29, 2021, §1065.1 was amended, effective July 29, 2021.

§1065.2 Submitting information to EPA under this part.

(a) You are responsible for statements and information in your applications for certification, requests for approved procedures, selective enforcement audits, laboratory audits, production-line test reports, field test reports, or any other statements you make to us related to this part 1065. If you provide statements or information to someone for submission to EPA, you are responsible for these statements and information as if you had submitted them to EPA yourself.

(b) In the standard-setting part and in 40 CFR 1068.101, we describe your obligation to report truthful and complete information and the consequences of failing to meet this obligation. *See* also 18 U.S.C. 1001 and 42 U.S.C. 7413(c)(2). This obligation applies whether you submit this information directly to EPA or through someone else.

(c) We may void any certificates or approvals associated with a submission of information if we find that you intentionally submitted false, incomplete, or misleading information. For example, if we find that you intentionally submitted incomplete information to mislead EPA when requesting approval to use alternate test procedures, we may void the certificates for all engines families certified based on emission data collected using the alternate procedures. This would also apply if you ignore data from incomplete tests or from repeat tests with higher emission results.

(d) We may require an authorized representative of your company to approve and sign the submission, and to certify that all the information submitted is accurate and complete. This includes everyone who submits information, including manufacturers and others.

(e) See 40 CFR 1068.10 for provisions related to confidential information. Note however that under 40 CFR 2.301, emission data are generally not eligible for confidential treatment.

(f) Nothing in this part should be interpreted to limit our ability under Clean Air Act section 208 (42 U.S.C. 7542) to verify that engines conform to the regulations.

[73 FR 37289, June 30, 2008, as amended at 75 FR 23028, Apr. 30, 2010; 79 FR 23752, Apr. 28, 2014]

EFFECTIVE DATE NOTE: At 86 FR 34533, June 29, 2021, §1065.2 was amended, effective July 29, 2021.

§1065.5 Overview of this part 1065 and its relationship to the standard-setting part.

(a) This part specifies procedures that apply generally to testing various categories of engines. See the standard-setting part for directions in applying specific provisions in this part for a

particular type of engine. Before using this part's procedures, read the standard-setting part to answer at least the following questions:

(1) What duty cycles must I use for laboratory testing?

(2) Should I warm up the test engine before measuring emissions, or do I need to measure cold-start emissions during a warm-up segment of the duty cycle?

(3) Which exhaust constituents do I need to measure? Measure all exhaust constituents that are subject to emission standards, any other exhaust constituents needed for calculating emission rates, and any additional exhaust constituents as specified in the standard-setting part. Alternatively, you may omit the measurement of N_2O and CH_4 for an engine, provided it is not subject to an N_2O or CH_4 emission standard. If you omit the measurement of N_2O and CH_4, you must provide other information and/or data that will give us a reasonable basis for estimating the engine's emission rates.

(4) Do any unique specifications apply for test fuels?

(5) What maintenance steps may I take before or between tests on an emission-data engine?

(6) Do any unique requirements apply to stabilizing emission levels on a new engine?

(7) Do any unique requirements apply to test limits, such as ambient temperatures or pressures?

(8) Is field testing required or allowed, and are there different emission standards or procedures that apply to field testing?

(9) Are there any emission standards specified at particular engine-operating conditions or ambient conditions?

(10) Do any unique requirements apply for durability testing?

(b) The testing specifications in the standard-setting part may differ from the specifications in this part. In cases where it is not possible to comply with both the standard-setting part and this part, you must comply with the specifications in the standard-setting part. The standard-setting part may also allow you to deviate from the procedures of this part for other reasons.

(c) The following table shows how this part divides testing specifications into subparts:

TABLE 1 OF § 1065.5—DESCRIPTION OF PART 1065 SUBPARTS

This subpart	Describes these specifications or procedures
Subpart A	Applicability and general provisions.
Subpart B	Equipment for testing.
Subpart C	Measurement instruments for testing.
Subpart D	Calibration and performance verifications for measurement systems.
Subpart E	How to prepare engines for testing, including service accumulation.
Subpart F	How to run an emission test over a predetermined duty cycle.
Subpart G	Test procedure calculations.
Subpart H	Fuels, engine fluids, analytical gases, and other calibration standards.
Subpart I	Special procedures related to oxygenated fuels.
Subpart J	How to test with portable emission measurement systems (PEMS).

[73 FR 37289, June 30, 2008, as amended at 74 FR 56511, Oct. 30, 2009]

§ 1065.10 Other procedures.

(a) *Your testing*. The procedures in this part apply for all testing you do to show compliance with emission standards, with certain exceptions noted in this section. In some other sections in this part, we allow you to use other procedures (such as less precise or less accurate procedures) if they do not affect your ability to show that your engines comply with the applicable emission standards. This generally requires emission levels to be far enough below the applicable emission standards so that any errors caused by greater imprecision or inaccuracy do not affect your ability to state unconditionally that the engines meet all applicable emission standards.

(b) *Our testing*. These procedures generally apply for testing that we do to determine if your engines comply with applicable emission standards. We may

perform other testing as allowed by the Act.

(c) *Exceptions.* We may allow or require you to use procedures other than those specified in this part in the following cases, which may apply to laboratory testing, field testing, or both. We intend to publicly announce when we allow or require such exceptions. All of the test procedures noted here as exceptions to the specified procedures are considered generically as ''other procedures.'' Note that the terms ''special procedures'' and ''alternate procedures'' have specific meanings; ''special procedures'' are those allowed by §1065.10(c)(2) and ''alternate procedures'' are those allowed by §1065.10(c)(7).

(1) The objective of the procedures in this part is to produce emission measurements equivalent to those that would result from measuring emissions during in-use operation using the same engine configuration as installed in a vehicle, equipment, or vessel. However, in unusual circumstances where these procedures may result in measurements that do not represent in-use operation, you must notify us if good engineering judgment indicates that the specified procedures cause unrepresentative emission measurements for your engines. Note that you need not notify us of unrepresentative aspects of the test procedure if measured emissions are equivalent to in-use emissions. This provision does not obligate you to pursue new information regarding the different ways your engine might operate in use, nor does it obligate you to collect any other in-use information to verify whether or not these test procedures are representative of your engine's in-use operation. If you notify us of unrepresentative procedures under this paragraph (c)(1), we will cooperate with you to establish whether and how the procedures should be appropriately changed to result in more representative measurements. While the provisions of this paragraph (c)(1) allow us to be responsive to issues as they arise, we would generally work toward making these testing changes generally applicable through rulemaking. We will allow reasonable lead time for compliance with any resulting change in procedures. We will consider the following factors in determining the importance of pursuing changes to the procedures:

(i) Whether supplemental emission standards or other requirements in the standard-setting part address the type of operation of concern or otherwise prevent inappropriate design strategies.

(ii) Whether the unrepresentative aspect of the procedures affects your ability to show compliance with the applicable emission standards.

(iii) The extent to which the established procedures require the use of emission-control technologies or strategies that are expected to ensure a comparable degree of emission control under the in-use operation that differs from the specified procedures.

(2) You may request to use special procedures if your engine cannot be tested using the specified procedures. For example, this may apply if your engine cannot operate on the specified duty cycle. In this case, tell us in writing why you cannot satisfactorily test your engine using this part's procedures and ask to use a different approach. We will approve your request if we determine that it would produce emission measurements that represent in-use operation and we determine that it can be used to show compliance with the requirements of the standard-setting part. Where we approve special procedures that differ substantially from the specified procedures, we may preclude you from participating in averaging, banking, and trading with the affected engine families.

(3) In a given model year, you may use procedures required for later model year engines without request. If you upgrade your testing facility in stages, you may rely on a combination of procedures for current and later model year engines as long as you can ensure, using good engineering judgment, that the combination you use for testing does not affect your ability to show compliance with the applicable emission standards.

(4) In a given model year, you may ask to use procedures allowed for earlier model year engines. We will approve this only if you show us that using the procedures allowed for earlier

model years does not affect your ability to show compliance with the applicable emission standards.

(5) You may ask to use emission data collected using other procedures, such as those of the California Air Resources Board or the International Organization for Standardization. We will approve this only if you show us that using these other procedures does not affect your ability to show compliance with the applicable emission standards.

(6) During the 12 months following the effective date of any change in the provisions of this part 1065 (and 40 CFR part 1066 for vehicle testing), you may use data collected using procedures specified in the previously applicable version of this part 1065 (and 40 CFR part 1066 for vehicle testing). This also applies for changes to test procedures specified in the standard-setting part to the extent that these changes do not correspond to new emission standards. This paragraph (c)(6) does not restrict the use of carryover certification data otherwise allowed by the standard-setting part.

(7) You may request to use alternate procedures that are equivalent to the specified procedures, or procedures that are more accurate or more precise than the specified procedures. We may perform tests with your engines using either the approved alternate procedures or the specified procedures. The following provisions apply to requests for alternate procedures:

(i) *Applications*. Follow the instructions in § 1065.12.

(ii) *Submission*. Submit requests in writing to the Designated Compliance Officer.

(iii) *Notification*. We may approve your request by telling you directly, or we may issue guidance announcing our approval of a specific alternate procedure, which would make additional requests for approval unnecessary.

(d) *Advance approval*. If we require you to request approval to use other procedures under paragraph (c) of this section, you may not use them until we approve your request.

[70 FR 40516, July 13, 2005, as amended at 73 FR 37290, June 30, 2008; 75 FR 23028, Apr. 30, 2010; 79 FR 23752, Apr. 28, 2014; 80 FR 9118, Feb. 19, 2015; 81 FR 74162, Oct. 25, 2016]

§ 1065.12 Approval of alternate procedures.

(a) To get approval for an alternate procedure under § 1065.10(c), send the Designated Compliance Officer an initial written request describing the alternate procedure and why you believe it is equivalent to the specified procedure. Anyone may request alternate procedure approval. This means that an individual engine manufacturer may request to use an alternate procedure. This also means that an instrument manufacturer may request to have an instrument, equipment, or procedure approved as an alternate procedure to those specified in this part. We may approve your request based on this information alone, whether or not it includes all the information specified in this section. Where we determine that your original submission does not include enough information for us to determine that the alternate procedure is equivalent to the specified procedure, we may ask you to submit supplemental information showing that your alternate procedure is consistently and reliably at least as accurate and repeatable as the specified procedure.

(b) We may make our approval under this section conditional upon meeting other requirements or specifications. We may limit our approval, for example, to certain time frames, specific duty cycles, or specific emission standards. Based upon any supplemental information we receive after our initial approval, we may amend a previously approved alternate procedure to extend, limit, or discontinue its use. We intend to publicly announce alternate procedures that we approve.

(c) Although we will make every effort to approve only alternate procedures that completely meet our requirements, we may revoke our approval of an alternate procedure if new information shows that it is significantly not equivalent to the specified procedure.

If we do this, we will grant time to switch to testing using an allowed procedure, considering the following factors:

(1) The cost, difficulty, and availability to switch to a procedure that we allow.

(2) The degree to which the alternate procedure affects your ability to show that your engines comply with all applicable emission standards.

(3) Any relevant factors considered in our initial approval.

(d) If we do not approve your proposed alternate procedure based on the information in your initial request, we may ask you to send additional information to fully evaluate your request. While we consider the information specified in this paragraph (d) and the statistical criteria of paragraph (e) of this section to be sufficient to demonstrate equivalence, it may not be necessary to include all the information or meet the specified statistical criteria. For example, systems that do not meet the statistical criteria in paragraph (e) of this section because they have a small bias toward high emission results could be approved since they would not adversely affect your ability to demonstrate compliance with applicable standards.

(1) *Theoretical basis*. Give a brief technical description explaining why you believe the proposed alternate procedure should result in emission measurements equivalent to those using the specified procedure. You may include equations, figures, and references. You should consider the full range of parameters that may affect equivalence. For example, for a request to use a different NO_X measurement procedure, you should theoretically relate the alternate detection principle to the specified detection principle over the expected concentration ranges for NO, NO_2, and interference gases. For a request to use a different PM measurement procedure, you should explain the principles by which the alternate procedure quantifies particulate mass similarly to the specified procedures.

(2) *Technical description*. Describe briefly any hardware or software needed to perform the alternate procedure. You may include dimensioned drawings, flowcharts, schematics, and component specifications. Explain any necessary calculations or other data manipulation.

(3) *Procedure execution*. Describe briefly how to perform the alternate procedure and recommend a level of training an operator should have to achieve acceptable results.

Summarize the installation, calibration, operation, and maintenance procedures in a step-by-step format. Describe how any calibration is performed using NIST-traceable standards or other similar standards we approve. Calibration must be specified by using known quantities and must not be specified as a comparison with other allowed procedures.

(4) *Data-collection techniques*. Compare measured emission results using the proposed alternate procedure and the specified procedure, as follows:

(i) Both procedures must be calibrated independently to NIST-traceable standards or to other similar standards we approve.

(ii) Include measured emission results from all applicable duty cycles. Measured emission results should show that the test engine meets all applicable emission standards according to specified procedures.

(iii) Use statistical methods to evaluate the emission measurements, such as those described in paragraph (e) of this section.

(e) Absent any other directions from us, use a *t*-test and an *F*-test calculated according to §1065.602 to evaluate whether your proposed alternate procedure is equivalent to the specified procedure. We may give you specific directions regarding methods for statistical analysis, or we may approve other methods that you propose. Such alternate methods may be more or less stringent than those specified in this paragraph (e). In determining the appropriate statistical criteria, we will consider the repeatability of measurements made with the reference procedure. For example, less stringent statistical criteria may be appropriate for measuring emission levels being so low that they adversely affect the repeatability of reference measurements. We recommend that you consult a statistician if you are unfamiliar with these statistical tests. Perform the tests as follows:

(1) Repeat measurements for all applicable duty cycles at least seven times for each procedure. You may use laboratory duty cycles to evaluate field-testing procedures.

Be sure to include all available results to evaluate the precision and accuracy of the proposed alternate procedure, as described in § 1065.2.

(2) Demonstrate the accuracy of the proposed alternate procedure by showing that it passes a two-sided *t*-test. Use an unpaired *t*-test, unless you show that a paired t-test is appropriate under both of the following provisions:

(i) For paired data, the population of the paired differences from which you sampled paired differences must be independent. That is, the probability of any given value of one paired difference is unchanged by knowledge of the value of another paired difference. For example, your paired data would violate this requirement if your series of paired differences showed a distinct increase or decrease that was dependent on the time at which they were sampled.

(ii) For paired data, the population of paired differences from which you sampled the paired differences must have a normal (i.e., Gaussian) distribution. If the population of paired difference is not normally distributed, consult a statistician for a more appropriate statistical test, which may include transforming the data with a mathematical function or using some kind of nonparametric test.

(3) Show that t is less than the critical t value, t_{crit}, tabulated in § 1065.602, for the following confidence intervals:

(i) 90% for a proposed alternate procedure for laboratory testing.

(ii) 95% for a proposed alternate procedure for field testing.

(4) Demonstrate the precision of the proposed alternate procedure by showing that it passes an *F*-test. Use a set of at least seven samples from the reference procedure and a set of at least seven samples from the alternate procedure to perform an *F*-test. The sets must meet the following requirements:

(i) Within each set, the values must be independent. That is, the probability of any given value in a set must be unchanged by knowledge of another value in that set. For example, your data would violate this requirement if a set showed a distinct increase or decrease that was dependent upon the time at which they were sampled.

(ii) For each set, the population of values from which you sampled must have a normal (i.e., Gaussian) distribution. If the population of values is not normally distributed, consult a statistician for a more appropriate statistical test, which may include transforming the data with a mathematical function or using some kind of nonparametric test.

(iii) The two sets must be independent of each other. That is, the probability of any given value in one set must be unchanged by knowledge of another value in the other set. For example, your data would violate this requirement if one value in a set showed a distinct increase or decrease that was dependent upon a value in the other set. Note that a trend of emission changes from an engine would not violate this requirement.

(iv) If you collect paired data for the paired *t*-test in paragraph (e)(2) in this section, use caution when selecting sets from paired data for the *F*-test. If you do this, select sets that do not mask the precision of the measurement procedure. We recommend selecting such sets only from data collected using the same engine, measurement instruments, and test cycle.

(5) Show that F is less than the critical F value, F_{crit}, tabulated in § 1065.602. If you have several *F*-test results from several sets of data, show that the mean *F*-test value is less than the mean critical F value for all the sets. Evaluate F_{crit}, based on the following confidence intervals:

(i) 90% for a proposed alternate procedure for laboratory testing.

(ii) 95% for a proposed alternate procedure for field testing.

[70 FR 40516, July 13, 2005, as amended at 73 FR 37290, June 30, 2008; 79 FR 23752, Apr. 28, 2014]

§ 1065.15 Overview of procedures for laboratory and field testing.

This section outlines the procedures to test engines that are subject to emission standards.

(a) In the standard-setting part, we set brake-specific emission standards in g/(kW · hr) (or g/(hp · hr)), for the following constituents:

(1) Total oxides of nitrogen, NO_X.

(2) Hydrocarbon, HC, which may be expressed in the following ways:

(i) Total hydrocarbon, THC.

(ii) Nonmethane hydrocarbon, NMHC, which results from subtracting methane, CH_4, from THC.

(iii) Nonmethane-nonethane hydrocarbon, NMNEHC, which results from subtracting methane, CH_4, and ethane, C_2H_6, from THC.

(iv) Total hydrocarbon-equivalent, THCE, which results from adjusting THC mathematically to be equivalent on a carbon-mass basis.

(v) Nonmethane hydrocarbon-equivalent, NMHCE, which results from adjusting NMHC mathematically to be equivalent on a carbon-mass basis.

(3) Particulate matter, PM.

(4) Carbon monoxide, CO.

(5) Carbon dioxide, CO_2.

(6) Methane, CH_4.

(7) Nitrous oxide, N_2O.

(b) Note that some engines are not subject to standards for all the emission constituents identified in paragraph (a) of this section. Note also that the standard-setting part may include standards for pollutants not listed in paragraph (a) of this section.

(c) We generally set brake-specific emission standards over test intervals and/or duty cycles, as follows:

(1) *Engine operation*. Testing may involve measuring emissions and work in a laboratory-type environment or in the field, as described in paragraph (f) of this section. For most laboratory testing, the engine is operated over one or more duty cycles specified in the standard-setting part. However, laboratory testing may also include non-duty cycle testing (such as simulation of field testing in a laboratory). For field testing, the engine is operated under normal in-use operation. The standard-setting part specifies how test intervals are defined for field testing. Refer to the definitions of ''duty cycle'' and ''test interval'' in § 1065.1001. Note that a single duty cycle may have multiple test intervals and require weighting of results from multiple test intervals to calculate a composite brake-specific emissions value to compare to the standard.

(2) *Constituent determination*. Determine the total mass of each constituent over a test interval by selecting from the following methods:

(i) *Continuous sampling*. In continuous sampling, measure the constituent's concentration continuously from raw or dilute exhaust. Multiply this concentration by the continuous (raw or dilute) flow rate at the emission sampling location to determine the constituent's flow rate. Sum the constituent's flow rate continuously over the test interval. This sum is the total mass of the emitted constituent.

(ii) *Batch sampling*. In batch sampling, continuously extract and store a sample of raw or dilute exhaust for later measurement. Extract a sample proportional to the raw or dilute exhaust flow rate. You may extract and store a proportional sample of exhaust in an appropriate container, such as a bag, and then measure NO_X, HC, CO, CO_2, CH_4, N_2O, and CH_2O concentrations in the container after the test interval. You may deposit PM from proportionally extracted exhaust onto an appropriate substrate, such as a filter. In this case, divide the PM by the amount of filtered exhaust to calculate the PM concentration. Multiply batch sampled concentrations by the total (raw or dilute) flow from which it was extracted during the test interval. This product is the total mass of the emitted constituent.

(iii) *Combined sampling*. You may use continuous and batch sampling simultaneously during a test interval, as follows:

(A) You may use continuous sampling for some constituents and batch sampling for others.

(B) You may use continuous and batch sampling for a single constituent, with one being a redundant measurement. *See* § 1065.201 for more information on redundant measurements.

(3) *Work determination*. Determine work over a test interval by one of the following methods:

(i) *Speed and torque*. Synchronously multiply speed and brake torque to calculate instantaneous values for engine brake power. Sum engine brake power over a test interval to determine total work.

(ii) *Fuel consumed and brake-specific fuel consumption*. Directly measure fuel consumed or calculate it with chemical

balances of the fuel, intake air, and exhaust. To calculate fuel consumed by a chemical balance, you must also measure either intake-air flow rate or exhaust flow rate. Divide the fuel consumed during a test interval by the brake-specific fuel consumption to determine work over the test interval. For laboratory testing, calculate the brake-specific fuel consumption using fuel consumed and speed and torque over a test interval. For field testing, refer to the standard-setting part and § 1065.915 for selecting an appropriate value for brake-specific fuel consumption.

(d) Refer to § 1065.650 for calculations to determine brake-specific emissions.

(e) The following figure illustrates the allowed measurement configurations described in this part 1065:

Figure 1 of §1065.15—Default test procedures and other specified procedures.

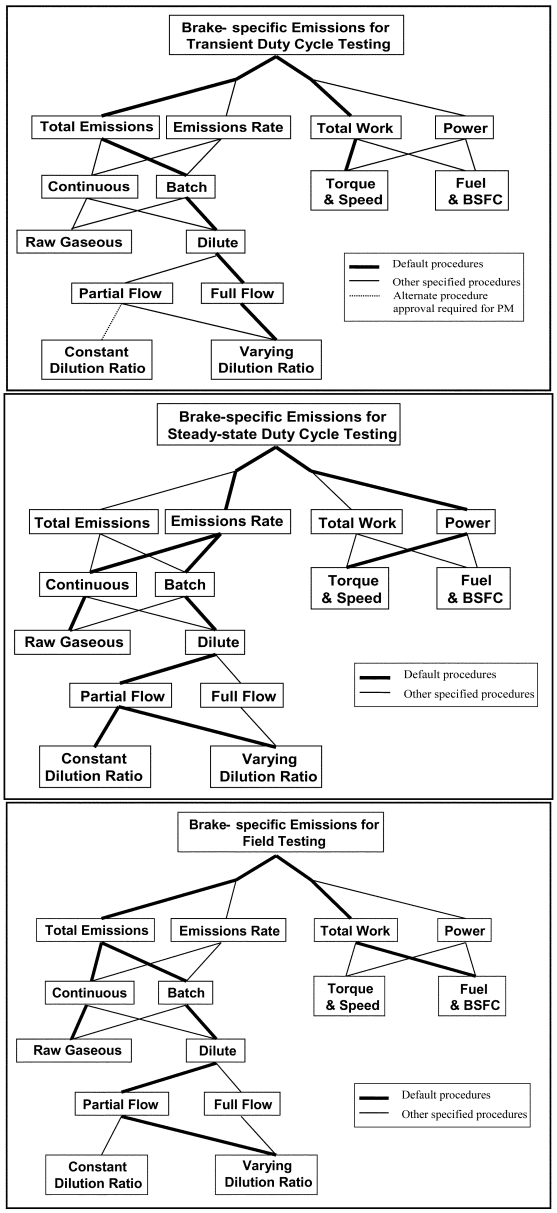

(f) This part 1065 describes how to test engines in a laboratory-type environment or in the field.

(1) This affects test intervals and duty cycles as follows:

(i) For laboratory testing, you generally determine brake-specific emissions for duty-cycle testing by using an engine dynamometer in a laboratory or other environment. This typically consists of one or more test intervals, each defined by a duty cycle, which is a sequence of modes, speeds, and/or torques (or powers) that an engine must follow. If the standard-setting part allows it, you may also simulate field testing with an engine dynamometer in a laboratory or other environment.

(ii) Field testing consists of normal in-use engine operation while an engine is installed in a vehicle, equipment, or vessel rather than following a specific engine duty cycle. The standard-setting part specifies how test intervals are defined for field testing.

(2) The type of testing may also affect what test equipment may be used. You may use ''lab-grade'' test equipment for any testing. The term ''lab-grade'' refers to equipment that fully conforms to the applicable specifications of this part. For some testing you may alternatively use ''field-grade'' equipment. The term ''field-grade'' refers to equipment that fully conforms to the applicable specifications of subpart J of this part, but does not fully conform to other specifications of this part. You may use ''field-grade'' equipment for field testing. We also specify in this part and in the standard-setting parts certain cases in which you may use ''field-grade'' equipment for testing in a laboratory-type environment. (NOTE: Although ''field-grade'' equipment is generally more portable than ''lab-grade'' test equipment, portability is not relevant to whether equipment is considered to be ''field-grade'' or ''lab-grade''.)

[70 FR 40516, July 13, 2005, as amended at 73 FR 37290, June 30, 2008; 75 FR 23028, Apr. 30, 2010; 76 FR 57437, Sept. 15, 2011; 79 FR 23753, Apr. 28, 2014; 81 FR 74162, Oct. 25, 2016]

§ 1065.20 Units of measure and overview of calculations.

(a) *System of units.* The procedures in this part generally follow the International System of Units (SI), as detailed in NIST Special Publication 811, which we incorporate by reference in § 1065.1010. The following exceptions apply:

(1) We designate angular speed, f_n, of an engine's crankshaft in revolutions per minute (r/min), rather than the SI unit of radians per second (rad/s). This is based on the commonplace use of r/min in many engine dynamometer laboratories.

(2) We designate brake-specific emissions in grams per kilowatt-hour (g/(kW · hr)), rather than the SI unit of grams per megajoule (g/MJ). In addition, we use the symbol hr to identify hour, rather than the SI convention of using h. This is based on the fact that engines are generally subject to emission standards expressed in g/kW · hr. If we specify engine standards in grams per horsepower · hour (g/(hp · hr)) in the standard-setting part, convert units as specified in paragraph (d) of this section.

(3) We generally designate temperatures in units of degrees Celsius (°C) unless a calculation requires an absolute temperature. In that case, we designate temperatures in units of Kelvin (K). For conversion purposes throughout this part, 0 °C equals 273.15 K. Unless specified otherwise, always use absolute temperature values for multiplying or dividing by temperature.

(b) *Concentrations.* This part does not rely on amounts expressed in parts per million. Rather, we express such amounts in the following SI units:

(1) For ideal gases, μmol/mol, formerly ppm (volume).

(2) For all substances, cm^3/m^3, formerly ppm (volume).

(3) For all substances, mg/kg, formerly ppm (mass).

(c) *Absolute pressure.* Measure absolute pressure directly or calculate it as the sum of atmospheric pressure plus a differential pressure that is referenced to atmospheric pressure. Always use absolute pressure values for multiplying or dividing by pressure.

(d) *Units conversion.* Use the following conventions to convert units:

(1) *Testing.* You may record values and perform calculations with other units. For testing with equipment that involves other units, use the conversion factors from NIST Special Publication 811, as described in paragraph (a) of this section.

(2) *Humidity*. In this part, we identify humidity levels by specifying dew-point, which is the temperature at which pure water begins to condense out of air. Use humidity conversions as described in § 1065.645.

(3) *Emission standards*. If your standard is in g/(hp · hr) units, convert kW to hp before any rounding by using the conversion factor of 1 hp (550 ft · lbf/s) = 0.7456999 kW. Round the final value for comparison to the applicable standard.

(e) *Rounding*. You are required to round certain final values, such as final emission values. You may round intermediate values when transferring data as long as you maintain at least six significant digits (which requires more than six decimal places for values less than 0.1), or all significant digits if fewer than six digits are available. Unless the standard-setting part specifies otherwise, do not round other intermediate values. Round values to the number of significant digits necessary to match the number of decimal places of the applicable standard or specification as described in this paragraph (e). Note that specifications expressed as percentages have infinite precision (as described in paragraph (e)(7) of this section). Use the following rounding convention, which is consistent with ASTM E29 and NIST SP 811:

(1) If the first (left-most) digit to be removed is less than five, remove all the appropriate digits without changing the digits that remain. For example, 3.141593 rounded to the second decimal place is 3.14.

(2) If the first digit to be removed is greater than five, remove all the appropriate digits and increase the lowest-value remaining digit by one. For example, 3.141593 rounded to the fourth decimal place is 3.1416.

(3) If the first digit to be removed is five with at least one additional non-zero digit following the five, remove all the appropriate digits and increase the lowest-value remaining digit by one. For example, 3.141593 rounded to the third decimal place is 3.142.

(4) If the first digit to be removed is five with no additional non-zero digits following the five, remove all the appropriate digits, increase the lowest-value remaining digit by one if it is odd and leave it unchanged if it is even. For example, 1.75 and 1.750 rounded to the first decimal place are 1.8; while 1.85 and 1.850 rounded to the first decimal place are also 1.8. Note that this rounding procedure will always result in an even number for the lowest-value digit.

(5) This paragraph (e)(5) applies if the regulation specifies rounding to an increment other than decimal places or powers of ten (to the nearest 0.01, 0.1, 1, 10, 100, *etc.*). To round numbers for these special cases, divide the quantity by the specified rounding increment. Round the result to the nearest whole number as described in paragraphs (e)(1) through (4) of this section. Multiply the rounded number by the specified rounding increment. This value is the desired result. For example, to round 0.90 to the nearest 0.2, divide 0.90 by 0.2 to get a result of 4.5, which rounds to 4. Multiplying 4 by 0.2 gives 0.8, which is the result of rounding 0.90 to the nearest 0.2.

(6) The following tables further illustrate the rounding procedures specified in this paragraph (e):

Quantity	Rounding increment			
	10	1	0.1	0.01
3.141593	0	3	3.1	3.14
123,456.789	123,460	123,457	123,456.8	123,456.79
5.500	10	6	5.5	5.50
4.500	0	4	4.5	4.50

Quantity	Rounding increment			
	25	3	0.5	0.02
229.267	225	228	229.5	229.26
62.500	50	63	62.5	62.50
87.500	100	87	87.5	87.50
7.500	0	6	7.5	7.50

(7) This paragraph (e)(7) applies where we specify a limit or tolerance as some percentage of another value (such as ±2% of a maximum concentration). You may show compliance with such specifications either by applying the percentage to the total value to calculate an absolute limit, or by converting the absolute value to a percentage by dividing it by the total value.

(i) Do not round either value (the absolute limit or the calculated percentage), except as specified in paragraph (e)(7)(ii) of this section. For example, assume we specify that an analyzer must have a repeatability of ±1% of the maximum concentration or better, the maximum concentration is 1059 ppm, and you determine repeatability to be ±6.3 ppm. In this example, you could calculate an absolute limit of ±10.59 ppm (1059 ppm × 0.01) or calculate that the 6.3 ppm repeatability is equivalent to a repeatability of 0.5949008498584%.

(ii) Prior to July 1, 2013, you may treat tolerances (and equivalent specifications) specified in percentages as having fixed rather than infinite precision. For example, 2% would be equivalent to 1.51% to 2.50% and 2.0% would be equivalent to 1.951% to 2.050%. Note that this allowance applies whether or not the percentage is explicitly specified as a percentage of another value.

(8) You may use measurement devices that incorporate internal rounding, consistent with the provisions of this paragraph (e)(8). You may use devices that use any rounding convention if they report six or more significant digits. You may use devices that report fewer than six digits, consistent with good engineering judgment and the accuracy, repeatability, and noise specifications of this part. Note that this provision does not necessarily require you to perform engineering analysis or keep records.

(f) Interpretation of ranges. Interpret a range as a tolerance unless we explicitly identify it as an accuracy, repeatability, linearity, or noise specification. See § 1065.1001 for the definition of tolerance. In this part, we specify two types of ranges:

(1) Whenever we specify a range by a single value and corresponding limit values above and below that value (such as X ±Y), target the associated control point to that single value (X). Examples of this type of range include ''±10% of maximum pressure'', or ''(30 ±10) kPa''. In these examples, you would target the maximum pressure or 30 kPa, respectively.

(2) Whenever we specify a range by the interval between two values, you may target any associated control point to any value within that range. An example of this type of range is ''(40 to 50) kPa''.

(g) *Scaling of specifications with respect to an applicable standard.* Because this part 1065 is applicable to a wide range of engines and emission standards, some of the specifications in this part are scaled with respect to an engine's applicable standard or maximum power. This ensures that the specification will be adequate to determine compliance, but not overly burdensome by requiring unnecessarily high-precision equipment. Many of these specifications are given with respect to a ''flow-weighted mean'' that is expected at the standard or during testing. Flow-weighted mean is the mean of a quantity after it is weighted proportional to a corresponding flow rate. For example, if a gas concentration is measured continuously from the raw exhaust of an engine, its flow-weighted mean concentration is the sum of the products (dry-to-wet corrected, if applicable) of each recorded concentration times its respective exhaust flow rate, divided by the sum of the recorded flow rates. As another example, the bag concentration from a CVS system is the same as the flow-weighted mean concentration, because the CVS system itself flow-weights the bag concentration. Refer to § 1065.602 for information needed to estimate and calculate flow-weighted means. Wherever a specification is scaled to a value based upon an applicable standard, interpret the standard to be the family emission limit if the engine is certified under an emission credit program in the standard-setting part.

[70 FR 40516, July 13, 2005, as amended at 73 FR 37292, June 30, 2008; 76 FR 57438, Sept. 15, 2011; 79 FR 23753, Apr. 28, 2014]

§ 1065.25 Recordkeeping.

(a) The procedures in this part include various requirements to record

data or other information. Refer to the standard-setting part and § 1065.695 regarding specific recordkeeping requirements.

(b) You must promptly send us organized, written records in English if we ask for them. We may review them at any time.

(c) We may waive specific reporting or recordkeeping requirements we determine to be unnecessary for the purposes of this part and the standard-setting part. Note that while we will generally keep the records required by this part, we are not obligated to keep records we determine to be unnecessary for us to keep. For example, while we require you to keep records for invalid tests so that we may verify that your invalidation was appropriate, it is not necessary for us to keep records for our own invalid tests.

[79 FR 23753, Apr. 28, 2014]

Subpart B—Equipment Specifications

§ 1065.101 Overview.

(a) This subpart specifies equipment, other than measurement instruments, related to emission testing. The provisions of this subpart apply for all engine dynamometer testing where engine speeds and loads are controlled to follow a prescribed duty cycle. See subpart J of this part to determine which of the provisions of this subpart apply for field testing. This equipment includes three broad categories-dynamometers, engine fluid systems (such as fuel and intake-air systems), and emission-sampling hardware.

(b) Other related subparts in this part identify measurement instruments (subpart C), describe how to evaluate the performance of these instruments (subpart D), and specify engine fluids and analytical gases (subpart H).

(c) Subpart J of this part describes additional equipment that is specific to field testing.

(d) Figures 1 and 2 of this section illustrate some of the possible configurations of laboratory equipment. These figures are schematics only; we do not require exact conformance to them. Figure 1 of this section illustrates the equipment specified in this subpart and gives some references to sections in this subpart. Figure 2 of this section illustrates some of the possible configurations of a full-flow dilution, constant-volume sampling (CVS) system. Not all possible CVS configurations are shown.

(e) Dynamometer testing involves engine operation over speeds and loads that are controlled to a prescribed duty cycle. Field testing involves measuring emissions over normal in-use operation of a vehicle or piece of equipment. Field testing does not involve operating an engine over a prescribed duty cycle.

Figure 1 of §1065.101—Engine dynamometer laboratory equipment.

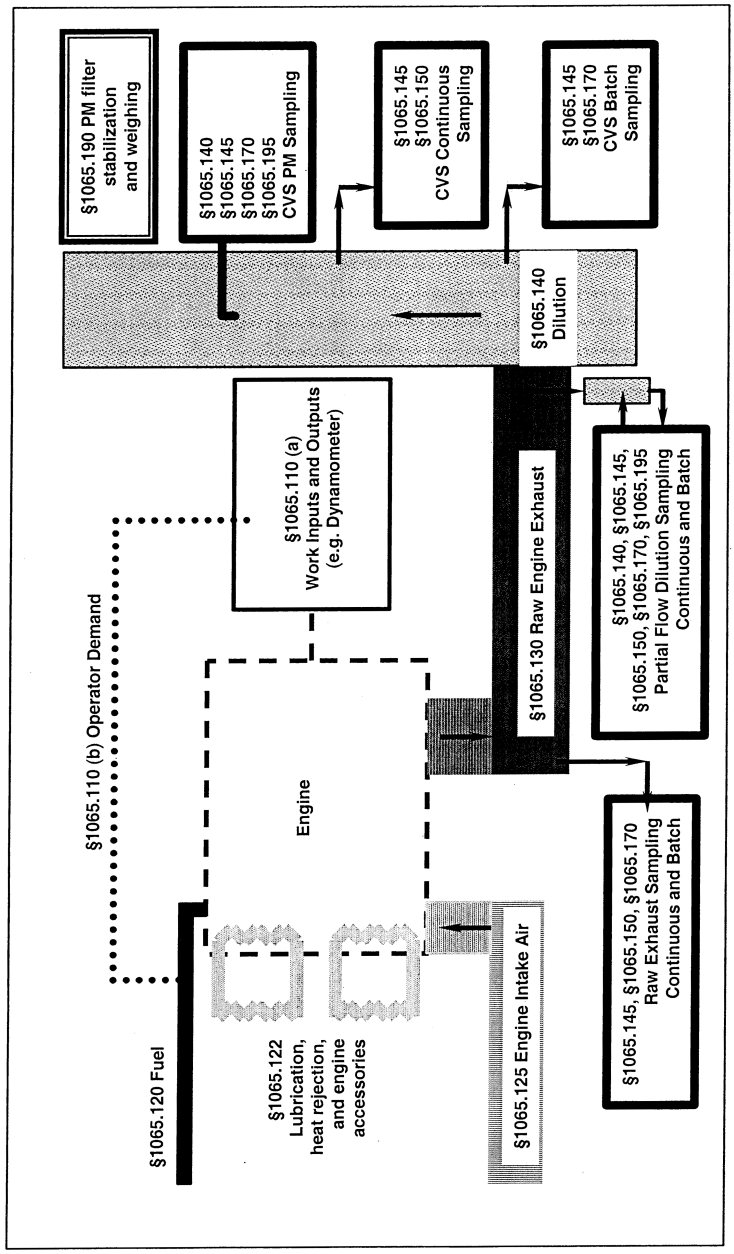

Figure 2 of §1065.101—Examples of some full-flow dilution sampling configurations.

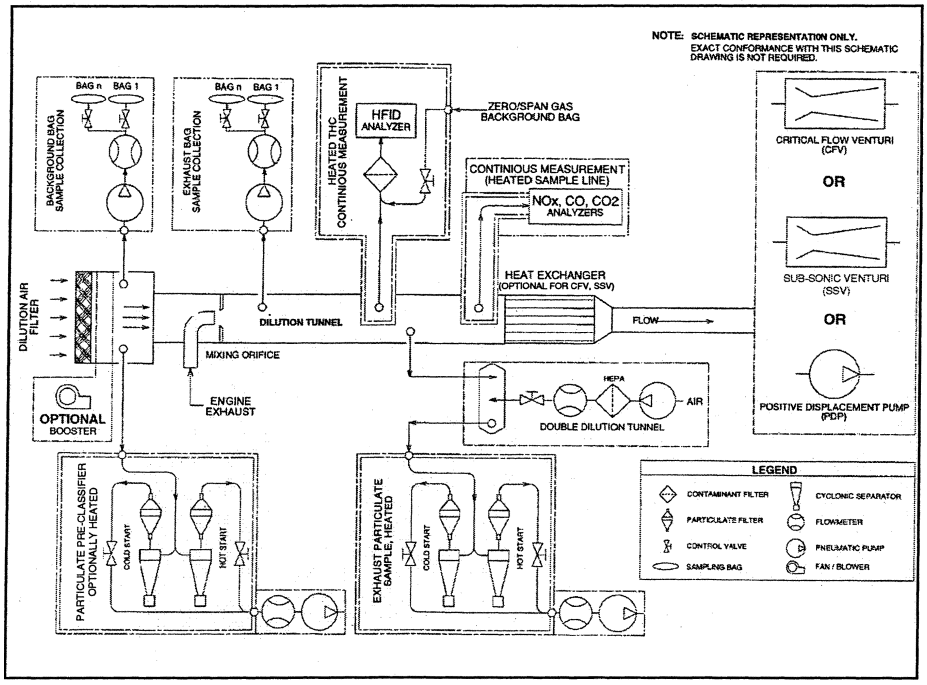

[70 FR 40516, July 13, 2005, as amended at 73 FR 37292, June 30, 2008]

§ 1065.110 Work inputs and outputs, accessory work, and operator demand.

(a) *Work*. Use good engineering judgment to simulate all engine work inputs and outputs as they typically would operate in use. Account for work inputs and outputs during an emission test by measuring them; or, if they are small, you may show by engineering analysis that disregarding them does not affect your ability to determine the net work output by more than ±0.5% of the net expected work output over the test interval. Use equipment to simulate the specific types of work, as follows:

(1) *Shaft work*. Use an engine dynamometer that is able to meet the cycle-validation criteria in § 1065.514 over each applicable duty cycle.

(i) You may use eddy-current and water-brake dynamometers for any testing that does not involve engine motoring, which is identified by negative torque commands in a reference duty cycle. See the standard setting part for reference duty cycles that are applicable to your engine.

(ii) You may use alternating-current or direct-current motoring dynamometers for any type of testing.

(iii) You may use one or more dynamometers.

(iv) You may use any device that is already installed on a vehicle, equipment, or vessel to absorb work from the engine's output shaft(s). Examples of these types of devices include a vessel's propeller and a locomotive's generator.

(2) *Electrical work*. Use one or more of the following to simulate electrical work:

(i) Use storage batteries or capacitors that are of the type and capacity installed in use.

(ii) Use motors, generators, and alternators that are of the type and capacity installed in use.

(iii) Use a resistor load bank to simulate electrical loads.

(3) *Pump, compressor, and turbine work.* Use pumps, compressors, and turbines that are of the type and capacity installed in use. Use working fluids that are of the same type and thermodynamic state as normal in-use operation.

(b) *Laboratory work inputs.* You may supply any laboratory inputs of work to the engine. For example, you may supply electrical work to the engine to operate a fuel system, and as another example you may supply compressor work to the engine to actuate pneumatic valves. We may ask you to show by engineering analysis your accounting of laboratory work inputs to meet the criterion in paragraph (a) of this section.

(c) *Engine accessories.* You must either install or account for the work of engine accessories required to fuel, lubricate, or heat the engine, circulate coolant to the engine, or to operate aftertreatment devices. Operate the engine with these accessories installed or accounted for during all testing operations, including mapping. If these accessories are not powered by the engine during a test, account for the work required to perform these functions from the total work used in brake-specific emission calculations. For air-cooled engines only, subtract externally powered fan work from total work. We may ask you to show by engineering analysis your accounting of engine accessories to meet the criterion in paragraph (a) of this section.

(d) *Engine starter.* You may install a production-type starter.

(e) *Operator demand for shaft work.* Operator demand is defined in §1065.1001. Command the operator demand and the dynamometer(s) to follow a prescribed duty cycle with set points for engine speed and torque as specified in §1065.512. Refer to the standard-setting part to determine the specifications for your duty cycle(s). Use a mechanical or electronic input to control operator demand such that the engine is able to meet the validation criteria in §1065.514 over each applicable duty cycle. Record feedback values for engine speed and torque as specified in §1065.512. Using good engineering judgment, you may improve control of operator demand by altering on-engine speed and torque controls. However, if these changes result in unrepresentative testing, you must notify us and recommend other test procedures under §1065.10(c)(1).

(f) *Other engine inputs.* If your electronic control module requires specific input signals that are not available during dynamometer testing, such as vehicle speed or transmission signals, you may simulate the signals using good engineering judgment. Keep records that describe what signals you simulate and explain why these signals are necessary for representative testing.

[70 FR 40516, July 13, 2005, as amended at 73 FR 37292, June 30, 2008]

§1065.120 Fuel properties and fuel temperature and pressure.

(a) Use fuels as specified in the standard-setting part, or as specified in subpart H of this part if fuels are not specified in the standard-setting part.

(b) If the engine manufacturer specifies fuel temperature and pressure tolerances and the location where they are to be measured, then measure the fuel temperature and pressure at the specified location to show that you are within these tolerances throughout testing.

(c) If the engine manufacturer does not specify fuel temperature and pressure tolerances, use good engineering judgment to set and control fuel temperature and pressure in a way that represents typical in-use fuel temperatures and pressures.

[70 FR 40516, July 13, 2005, as amended at 73 FR 37293, June 30, 2008]

§1065.122 Engine cooling and lubrication.

(a) *Engine cooling.* Cool the engine during testing so its intake-air, oil, coolant, block, and head temperatures are within their expected ranges for normal operation. You may use auxiliary coolers and fans.

(1) For air-cooled engines only, if you use auxiliary fans you must account for work input to the fan(s) according to § 1065.110.

(2) See § 1065.125 for more information related to intake-air cooling.

(3) See § 1065.127 for more information related to exhaust gas recirculation cooling.

(4) Measure temperatures at the manufacturer-specified locations. If the manufacturer does not specify temperature measurement locations, then use good engineering judgment to monitor intake-air, oil, coolant, block, and head temperatures to ensure that they are in their expected ranges for normal operation.

(b) *Forced cooldown*. You may install a forced cooldown system for an engine and an exhaust aftertreatment device according to § 1065.530(a)(1).

(c) *Lubricating oil*. Use lubricating oils specified in § 1065.740. For two-stroke engines that involve a specified mixture of fuel and lubricating oil, mix the lubricating oil with the fuel according to the manufacturer's specifications.

(d) *Coolant*. For liquid-cooled engines, use coolant as specified in § 1065.745.

[70 FR 40516, July 13, 2005, as amended at 73 FR 37293, June 30, 2008]

§ 1065.125 Engine intake air.

(a) Use the intake-air system installed on the engine or one that represents a typical in-use configuration. This includes the charge-air cooling and exhaust gas recirculation systems.

(b) Measure temperature, humidity, and atmospheric pressure near the entrance of the furthest upstream engine or in-use intake system component. This would generally be near the engine's air filter, or near the inlet to the in-use air intake system for engines that have no air filter. For engines with multiple intakes, make measurements near the entrance of each intake.

(1) *Pressure*. You may use a single shared atmospheric pressure meter as long as your laboratory equipment for handling intake air maintains ambient pressure at all intakes within ±1 kPa of the shared atmospheric pressure. For engines with multiple intakes with separate atmospheric pressure measurements at each intake, use an average value for verifying compliance to § 1065.520(b)(2).

(2) *Humidity*. You may use a single shared humidity measurement for intake air as long as your equipment for handling intake air maintains dewpoint at all intakes to within ±0.5 °C of the shared humidity measurement. For engines with multiple intakes with separate humidity measurements at each intake, use a flow-weighted average humidity for NO_X corrections. If individual flows of each intake are not measured, use good engineering judgment to estimate a flow-weighted average humidity.

(3) *Temperature*. Good engineering judgment may require that you shield the temperature sensors or move them upstream of an elbow in the laboratory intake system to prevent measurement errors due to radiant heating from hot engine surfaces or in-use intake system components. You must limit the distance between the temperature sensor and the entrance to the furthest upstream engine or in-use intake system component to no more than 12 times the outer hydraulic diameter of the entrance to the furthest upstream engine or in-use intake system component. However, you may exceed this limit if you use good engineering judgment to show that the temperature at the furthest upstream engine or in-use intake system component meets the specification in paragraph (c) of this section. For engines with multiple intakes, use a flow-weighted average value to verify compliance with the specification in paragraph (c) of this section. If individual flows of each intake are not measured, you may use good engineering judgment to estimate a flow-weighted average temperature. You may also verify that each individual intake complies with the specification in paragraph (c) of this section.

(c) Maintain the temperature of intake air to (25 ±5) °C, except as follows:

(1) Follow the standard-setting part if it specifies different temperatures.

(2) For engines above 560 kW, you may use 35 °C as the upper bound of the tolerance. However, your system must be capable of controlling the temperature to the 25 °C setpoint for any

steady-state operation at >30% of maximum engine power.

(3) You may ask us to allow you to apply a different setpoint for intake air temperature if it is necessary to remain consistent with the provisions of § 1065.10(c)(1) for testing during which ambient temperature will be outside this range.

(d) Use an intake-air restriction that represents production engines. Make sure the intake-air restriction is between the manufacturer's specified maximum for a clean filter and the manufacturer's specified maximum allowed. Measure the static differential pressure of the restriction at the location and at the speed and torque set points specified by the manufacturer. If the manufacturer does not specify a location, measure this pressure upstream of any turbocharger or exhaust gas recirculation system connection to the intake air system. If the manufacturer does not specify speed and torque points, measure this pressure while the engine outputs maximum power. As the manufacturer, you are liable for emission compliance for all values up to the maximum restriction you specify for a particular engine.

(e) This paragraph (e) includes provisions for simulating charge-air cooling in the laboratory. This approach is described in paragraph (e)(1) of this section. Limits on using this approach are described in paragraphs (e)(2) and (3) of this section.

(1) Use a charge-air cooling system with a total intake-air capacity that represents production engines' in-use installation. Design any laboratory charge-air cooling system to minimize accumulation of condensate. Drain any accumulated condensate. Before starting a duty cycle (or preconditioning for a duty cycle), completely close all drains that would normally be closed during in-use operation. Keep those drains closed during the emission test. Maintain coolant conditions as follows:

(i) Maintain a coolant temperature of at least 20 °C at the inlet to the charge-air cooler throughout testing. We recommend maintaining a coolant temperature of 25 ±5 °C at the inlet of the charge-air cooler.

(ii) At the engine conditions specified by the manufacturer, set the coolant flow rate to achieve an air temperature within ±5 °C of the value specified by the manufacturer after the charge-air cooler's outlet. Measure the air-outlet temperature at the location specified by the manufacturer. Use this coolant flow rate set point throughout testing. If the engine manufacturer does not specify engine conditions or the corresponding charge-air cooler air outlet temperature, set the coolant flow rate at maximum engine power to achieve a charge-air cooler air outlet temperature that represents in-use operation.

(iii) If the engine manufacturer specifies pressure-drop limits across the charge-air cooling system, ensure that the pressure drop across the charge-air cooling system at engine conditions specified by the manufacturer is within the manufacturer's specified limit(s). Measure the pressure drop at the manufacturer's specified locations.

(2) Using a constant flow rate as described in paragraph (e)(1) of this section may result in unrepresentative overcooling of the intake air. The provisions of this paragraph (e)(2) apply instead of the provisions of § 1065.10(c)(1) for this simulation. Our allowance to cool intake air as specified in this paragraph (e) does not affect your liability for field testing or for laboratory testing that is done in a way that better represents in-use operation. Where we determine that this allowance adversely affects your ability to demonstrate that your engines would comply with emission standards under in-use conditions, we may require you to use more sophisticated setpoints and controls of charge-air pressure drop, coolant temperature, and flow rate to achieve more representative results.

(3) This approach does not apply for field testing. You may not correct measured emission levels from field testing to account for any differences caused by the simulated cooling in the laboratory.

[70 FR 40516, July 13, 2005, as amended at 73 FR 37293, June 30, 2008; 73 FR 59321, Oct. 8, 2008; 75 FR 23029, Apr. 30, 2010; 76 FR 57440, Sept. 15, 2011]

§ 1065.127 Exhaust gas recirculation.

Use the exhaust gas recirculation (EGR) system installed with the engine

or one that represents a typical in-use configuration. This includes any applicable EGR cooling devices.

§ 1065.130 Engine exhaust.

(a) *General.* Use the exhaust system installed with the engine or one that represents a typical in-use configuration. This includes any applicable aftertreatment devices. We refer to exhaust piping as an exhaust stack; this is equivalent to a tailpipe for vehicle configurations.

(b) *Aftertreatment configuration.* If you do not use the exhaust system installed with the engine, configure any aftertreatment devices as follows:

(1) Position any aftertreatment device so its distance from the nearest exhaust manifold flange or turbocharger outlet is within the range specified by the engine manufacturer in the application for certification. If this distance is not specified, position aftertreatment devices to represent typical in-use vehicle configurations.

(2) You may use exhaust tubing that is not from the in-use exhaust system upstream of any aftertreatment device that is of diameter(s) typical of in-use configurations. If you use exhaust tubing that is not from the in-use exhaust system upstream of any aftertreatment device, position each aftertreatment device according to paragraph (b)(1) of this section.

(c) *Sampling system connections.* Connect an engine's exhaust system to any raw sampling location or dilution stage, as follows:

(1) Minimize laboratory exhaust tubing lengths and use a total length of laboratory tubing of no more than 10 m or 50 outside diameters, whichever is greater. The start of laboratory exhaust tubing should be specified as the exit of the exhaust manifold, turbocharger outlet, last aftertreatment device, or the in-use exhaust system, whichever is furthest downstream. The end of laboratory exhaust tubing should be specified as the sample point, or first point of dilution. If laboratory exhaust tubing consists of several different outside tubing diameters, count the number of diameters of length of each individual diameter, then sum all the diameters to determine the total length of exhaust tubing in diameters. Use the mean outside diameter of any converging or diverging sections of tubing. Use outside hydraulic diameters of any noncircular sections. For multiple stack configurations where all the exhaust stacks are combined, the start of the laboratory exhaust tubing may be taken at the last joint of where all the stacks are combined.

(2) You may install short sections of flexible laboratory exhaust tubing at any location in the engine or laboratory exhaust systems. You may use up to a combined total of 2 m or 10 outside diameters of flexible exhaust tubing.

(3) Insulate any laboratory exhaust tubing downstream of the first 25 outside diameters of length.

(4) Use laboratory exhaust tubing materials that are smooth-walled, electrically conductive, and not reactive with exhaust constituents. Stainless steel is an acceptable material.

(5) We recommend that you use laboratory exhaust tubing that has either a wall thickness of less than 2 mm or is air gap-insulated to minimize temperature differences between the wall and the exhaust.

(6) We recommend that you connect multiple exhaust stacks from a single engine into one stack upstream of any emission sampling. For raw or dilute partial-flow emission sampling, to ensure mixing of the multiple exhaust streams before emission sampling, we recommend a minimum Reynolds number, $Re^{\#}$, of 4000 for the combined exhaust stream, where $Re^{\#}$ is based on the inside diameter of the combined flow at the first sampling point. You may configure the exhaust system with turbulence generators, such as orifice plates or fins, to achieve good mixing; inclusion of turbulence generators may be required for $Re^{\#}$ less than 4000 to ensure good mixing. $Re^{\#}$ is defined in § 1065.640. For dilute full-flow (CVS) emission sampling, you may configure the exhaust system without regard to mixing in the laboratory section of the raw exhaust. For example you may size the laboratory section to reduce its pressure drop even if the $Re^{\#}$, in the laboratory section of the raw exhaust is less than 4000.

(d) *In-line instruments.* You may insert instruments into the laboratory exhaust tubing, such as an in-line

smoke meter. If you do this, you may leave a length of up to 5 outside diameters of laboratory exhaust tubing uninsulated on each side of each instrument, but you must leave a length of no more than 25 outside diameters of laboratory exhaust tubing uninsulated in total, including any lengths adjacent to in-line instruments.

(e) *Leaks*. Minimize leaks sufficiently to ensure your ability to demonstrate compliance with the applicable standards. We recommend performing a chemical balance of fuel, intake air, and exhaust according to § 1065.655 to verify exhaust system integrity.

(f) *Grounding*. Electrically ground the entire exhaust system.

(g) *Forced cooldown*. You may install a forced cooldown system for an exhaust aftertreatment device according to § 1065.530(a)(1)(i).

(h) *Exhaust restriction*. As the manufacturer, you are liable for emission compliance for all values up to the maximum restriction(s) you specify for a particular engine. Measure and set exhaust restriction(s) at the location(s) and at the engine speed and torque values specified by the manufacturer. Also, for variable-restriction aftertreatment devices, measure and set exhaust restriction(s) at the aftertreatment condition (degreening/aging and regeneration/loading level) specified by the manufacturer. If the manufacturer does not specify a location, measure this pressure downstream of any turbocharger. If the manufacturer does not specify speed and torque points, measure pressure while the engine produces maximum power. Use an exhaust-restriction setpoint that represents a typical in-use value, if available. If a typical in-use value for exhaust restriction is not available, set the exhaust restriction at (80 to 100)% of the maximum exhaust restriction specified by the manufacturer, or if the maximum is 5 kPa or less, the set point must be no less than 1.0 kPa from the maximum. For example, if the maximum back pressure is 4.5 kPa, do not use an exhaust restriction set point that is less than 3.5 kPa.

(i) *Open crankcase emissions*. If the standard-setting part requires measuring open crankcase emissions, you may either measure open crankcase emissions separately using a method that we approve in advance, or route open crankcase emissions directly into the exhaust system for emission measurement. If the engine is not already configured to route open crankcase emissions for emission measurement, route open crankcase emissions as follows:

(1) Use laboratory tubing materials that are smooth-walled, electrically conductive, and not reactive with crankcase emissions. Stainless steel is an acceptable material. Minimize tube lengths. We also recommend using heated or thin-walled or air gap-insulated tubing to minimize temperature differences between the wall and the crankcase emission constituents.

(2) Minimize the number of bends in the laboratory crankcase tubing and maximize the radius of any unavoidable bend.

(3) Use laboratory crankcase exhaust tubing that meets the engine manufacturer's specifications for crankcase back pressure.

(4) Connect the crankcase exhaust tubing into the raw exhaust downstream of any aftertreatment system, downstream of any installed exhaust restriction, and sufficiently upstream of any sample probes to ensure complete mixing with the engine's exhaust before sampling. Extend the crankcase exhaust tube into the free stream of exhaust to avoid boundary-layer effects and to promote mixing. You may orient the crankcase exhaust tube's outlet in any direction relative to the raw exhaust flow.

[73 FR 37293, June 30, 2008, as amended at 79 FR 23754, Apr. 28, 2014]

EFFECTIVE DATE NOTE: At 86 FR 34534, June 29, 2021, § 1065.130 was amended, effective July 29, 2021.

§ 1065.140 Dilution for gaseous and PM constituents.

(a) *General*. You may dilute exhaust with ambient air, purified air, or nitrogen. References in this part to ''dilution air'' may include any of these. For gaseous emission measurement, the dilution air must be at least 15 °C. Note that the composition of the dilution air affects some gaseous emission measurement instruments' response to

emissions. We recommend diluting exhaust at a location as close as possible to the location where ambient air dilution would occur in use. Dilution may occur in a single stage or in multiple stages. For dilution in multiple stages, the first stage is considered primary dilution and later stages are considered secondary dilution.

(b) *Dilution-air conditions and background concentrations.* Before dilution air is mixed with exhaust, you may precondition it by increasing or decreasing its temperature or humidity. You may also remove constituents to reduce their background concentrations. The following provisions apply to removing constituents or accounting for background concentrations:

(1) You may measure constituent concentrations in the dilution air and compensate for background effects on test results. See §1065.650 for calculations that compensate for background concentrations (40 CFR 1066.610 for vehicle testing).

(2) Measure these background concentrations the same way you measure diluted exhaust constituents, or measure them in a way that does not affect your ability to demonstrate compliance with the applicable standards. For example, you may use the following simplifications for background sampling:

(i) You may disregard any proportional sampling requirements.

(ii) You may use unheated gaseous sampling systems.

(iii) You may use unheated PM sampling systems.

(iv) You may use continuous sampling if you use batch sampling for diluted emissions.

(v) You may use batch sampling if you use continuous sampling for diluted emissions.

(3) For removing background PM, we recommend that you filter all dilution air, including primary full-flow dilution air, with high-efficiency particulate air (HEPA) filters that have an initial minimum collection efficiency specification of 99.97% (see §1065.1001 for procedures related to HEPA-filtration efficiencies). Ensure that HEPA filters are installed properly so that background PM does not leak past the HEPA filters. If you choose to correct for background PM without using HEPA filtration, demonstrate that the background PM in the dilution air contributes less than 50% to the net PM collected on the sample filter. You may correct net PM without restriction if you use HEPA filtration.

(c) *Full-flow dilution; constant-volume sampling (CVS).* You may dilute the full flow of raw exhaust in a dilution tunnel that maintains a nominally constant volume flow rate, molar flow rate or mass flow rate of diluted exhaust, as follows:

(1) *Construction.* Use a tunnel with inside surfaces of 300 series stainless steel. Electrically ground the entire dilution tunnel. We recommend a thin-walled and insulated dilution tunnel to minimize temperature differences between the wall and the exhaust gases. You may not use any flexible tubing in the dilution tunnel upstream of the PM sample probe. You may use nonconductive flexible tubing downstream of the PM sample probe and upstream of the CVS flow meter; use good engineering judgment to select a tubing material that is not prone to leaks, and configure the tubing to ensure smooth flow at the CVS flow meter.

(2) *Pressure control.* Maintain static pressure at the location where raw exhaust is introduced into the tunnel within ±1.2 kPa of atmospheric pressure. You may use a booster blower to control this pressure. If you test using more careful pressure control and you show by engineering analysis or by test data that you require this level of control to demonstrate compliance at the applicable standards, we will maintain the same level of static pressure control when we test.

(3) *Mixing.* Introduce raw exhaust into the tunnel by directing it downstream along the centerline of the tunnel. If you dilute directly from the exhaust stack, the end of the exhaust stack is considered to be the start of the dilution tunnel. You may introduce a fraction of dilution air radially from the tunnel's inner surface to minimize exhaust interaction with the tunnel walls. You may configure the system

with turbulence generators such as orifice plates or fins to achieve good mixing. We recommend a minimum Reynolds number, $Re^{\#}$, of 4000 for the diluted exhaust stream, where $Re^{\#}$ is based on the inside diameter of the dilution tunnel. $Re^{\#}$ is defined in § 1065.640.

(4) *Flow measurement preconditioning.* You may condition the diluted exhaust before measuring its flow rate, as long as this conditioning takes place downstream of any heated HC or PM sample probes, as follows:

(i) You may use flow straighteners, pulsation dampeners, or both of these.

(ii) You may use a filter.

(iii) You may use a heat exchanger to control the temperature upstream of any flow meter, but you must take steps to prevent aqueous condensation as described in paragraph (c)(6) of this section.

(5) *Flow measurement.* Section 1065.240 describes measurement instruments for diluted exhaust flow.

(6) *Aqueous condensation.* This paragraph (c)(6) describes how you must address aqueous condensation in the CVS. As described below, you may meet these requirements by preventing or limiting aqueous condensation in the CVS from the exhaust inlet to the last emission sample probe. See that paragraph for provisions related to the CVS between the last emission sample probe and the CVS flow meter. You may heat and/or insulate the dilution tunnel walls, as well as the bulk stream tubing downstream of the tunnel to prevent or limit aqueous condensation. Where we allow aqueous condensation to occur, use good engineering judgment to ensure that the condensation does not affect your ability to demonstrate that your engines comply with the applicable standards (see § 1065.10(a)).

(i) *Preventing aqueous condensation.* To prevent condensation, you must keep the temperature of internal surfaces, excluding any sample probes, above the dew point of the dilute exhaust passing through the CVS tunnel. Use good engineering judgment to monitor temperatures in the CVS. For the purposes of this paragraph (c)(6), assume that aqueous condensation is pure water condensate only, even though the definition of ''aqueous condensation'' in § 1065.1001 includes condensation of any constituents that contain water. No specific verification check is required under this paragraph (c)(6)(i), but we may ask you to show how you comply with this requirement. You may use engineering analysis, CVS tunnel design, alarm systems, measurements of wall temperatures, and calculation of water dew point to demonstrate compliance with this requirement. For optional CVS heat exchangers, you may use the lowest water temperature at the inlet(s) and outlet(s) to determine the minimum internal surface temperature.

(ii) *Limiting aqueous condensation.* This paragraph (c)(6)(ii) specifies limits of allowable condensation and requires you to verify that the amount of condensation that occurs during each test interval does not exceed the specified limits.

(A) Use chemical balance equations in § 1065.655 to calculate the mole fraction of water in the dilute exhaust continuously during testing. Alternatively, you may continuously measure the mole fraction of water in the dilute exhaust prior to any condensation during testing. Use good engineering judgment to select, calibrate and verify water analyzers/detectors. The linearity verification requirements of § 1065.307 do not apply to water analyzers/detectors used to correct for the water content in exhaust samples.

(B) Use good engineering judgment to select and monitor locations on the CVS tunnel walls prior to the last emission sample probe. If you are also verifying limited condensation from the last emission sample probe to the CVS flow meter, use good engineering judgment to select and monitor locations on the CVS tunnel walls, optional CVS heat exchanger, and CVS flow meter. For optional CVS heat exchangers, you may use the lowest water temperature at the inlet(s) and outlet(s) to determine the minimum internal surface temperature. Identify the minimum surface temperature on a continuous basis.

(C) Identify the maximum potential mole fraction of dilute exhaust lost on a continuous basis during the entire test interval. This value must be less

than or equal to 0.02. Calculate on a continuous basis the mole fraction of water that would be in equilibrium with liquid water at the measured minimum surface temperature. Subtract this mole fraction from the mole fraction of water that would be in the exhaust without condensation (either measured or from the chemical balance), and set any negative values to zero. This difference is the potential mole fraction of the dilute exhaust that would be lost due to water condensation on a continuous basis.

(D) Integrate the product of the molar flow rate of the dilute exhaust and the potential mole fraction of dilute exhaust lost, and divide by the totalized dilute exhaust molar flow over the test interval. This is the potential mole fraction of the dilute exhaust that would be lost due to water condensation over the entire test interval. Note that this assumes no re-evaporation. This value must be less than or equal to 0.005.

(7) *Flow compensation*. Maintain nominally constant molar, volumetric or mass flow of diluted exhaust. You may maintain nominally constant flow by either maintaining the temperature and pressure at the flow meter or by directly controlling the flow of diluted exhaust. You may also directly control the flow of proportional samplers to maintain proportional sampling. For an individual test, verify proportional sampling as described in § 1065.545.

(d) *Partial-flow dilution (PFD)*. You may dilute a partial flow of raw or previously diluted exhaust before measuring emissions. Section 1065.240 describes PFD-related flow measurement instruments. PFD may consist of constant or varying dilution ratios as described in paragraphs (d)(2) and (3) of this section. An example of a constant dilution ratio PFD is a ''secondary dilution PM'' measurement system.

(1) *Applicability*. (i) You may use PFD to extract a proportional raw exhaust sample for any batch or continuous PM emission sampling over any transient duty cycle, any steady-state duty cycle, or any ramped-modal cycle.

(ii) You may use PFD to extract a proportional raw exhaust sample for any batch or continuous gaseous emission sampling over any transient duty cycle, any steady-state duty cycle, or any ramped-modal cycle.

(iii) You may use PFD to extract a proportional raw exhaust sample for any batch or continuous field-testing.

(iv) You may use PFD to extract a proportional diluted exhaust sample from a CVS for any batch or continuous emission sampling.

(v) You may use PFD to extract a constant raw or diluted exhaust sample for any continuous emission sampling.

(vi) You may use PFD to extract a constant raw or diluted exhaust sample for any steady-state emission sampling.

(2) *Constant dilution-ratio PFD*. Do one of the following for constant dilution-ratio PFD:

(i) Dilute an already proportional flow. For example, you may do this as a way of performing secondary dilution from a CVS tunnel to achieve overall dilution ratio for PM sampling.

(ii) Continuously measure constituent concentrations. For example, you might dilute to precondition a sample of raw exhaust to control its temperature, humidity, or constituent concentrations upstream of continuous analyzers. In this case, you must take into account the dilution ratio before multiplying the continuous concentration by the sampled exhaust flow rate.

(iii) Extract a proportional sample from a separate constant dilution ratio PFD system. For example, you might use a variable-flow pump to proportionally fill a gaseous storage medium such as a bag from a PFD system. In this case, the proportional sampling must meet the same specifications as varying dilution ratio PFD in paragraph (d)(3) of this section.

(iv) For each mode of a discrete-mode test (such as a locomotive notch setting or a specific setting for speed and torque), use a constant dilution ratio for any PM sampling. You must change the overall PM sampling system dilution ratio between modes so that the dilution ratio on the mode with the highest exhaust flow rate meets § 1065.140(e)(2) and the dilution ratios on all other modes is higher than this (minimum) dilution ratio by the ratio of the maximum exhaust flow rate to the exhaust flow rate of the corresponding other mode. This is the

same dilution ratio requirement for RMC or field transient testing. You must account for this change in dilution ratio in your emission calculations.

(3) *Varying dilution-ratio PFD.* All the following provisions apply for varying dilution-ratio PFD:

(i) Use a control system with sensors and actuators that can maintain proportional sampling over intervals as short as 200 ms (i.e., 5 Hz control).

(ii) For control input, you may use any sensor output from one or more measurements; for example, intake-air flow, fuel flow, exhaust flow, engine speed, and intake manifold temperature and pressure.

(iii) Account for any emission transit time in the PFD system, as necessary.

(iv) You may use preprogrammed data if they have been determined for the specific test site, duty cycle, and test engine from which you dilute emissions.

(v) We recommend that you run practice cycles to meet the verification criteria in §1065.545. Note that you must verify every emission test by meeting the verification criteria with the data from that specific test. Data from previously verified practice cycles or other tests may not be used to verify a different emission test.

(vi) You may not use a PFD system that requires preparatory tuning or calibration with a CVS or with the emission results from a CVS. Rather, you must be able to independently calibrate the PFD.

(e) *Dilution air temperature, dilution ratio, residence time, and temperature control of PM samples.* Dilute PM samples at least once upstream of transfer lines. You may dilute PM samples upstream of a transfer line using full-flow dilution, or partial-flow dilution immediately downstream of a PM probe. In the case of partial-flow dilution, you may have up to 26 cm of insulated length between the end of the probe and the dilution stage, but we recommend that the length be as short as practical. The intent of these specifications is to minimize heat transfer to or from the emission sample before the final stage of dilution, other than the heat you may need to add to prevent aqueous condensation. This is accomplished by initially cooling the sample through dilution. Configure dilution systems as follows:

(1) Set the dilution air temperature to (25 ±5) °C. Use good engineering judgment to select a location to measure this temperature that is as close as practical upstream of the point where dilution air mixes with raw exhaust.

(2) For any PM dilution system (i.e., CVS or PFD), add dilution air to the raw exhaust such that the minimum overall ratio of diluted exhaust to raw exhaust is within the range of (5:1 to 7:1) and is at least 2:1 for any primary dilution stage. Base this minimum value on the maximum engine exhaust flow rate for a given test interval. Either measure the maximum exhaust flow during a practice run of the test interval or estimate it based on good engineering judgment (for example, you might rely on manufacturer-published literature).

(3) Configure any PM dilution system to have an overall residence time of (1.0 to 5.5) s, as measured from the location of initial dilution air introduction to the location where PM is collected on the sample media. Also configure the system to have a residence time of at least 0.50 s, as measured from the location of final dilution air introduction to the location where PM is collected on the sample media. When determining residence times within sampling system volumes, use an assumed flow temperature of 25 °C and pressure of 101.325 kPa.

(4) Control sample temperature to a (47 ±5) °C tolerance, as measured anywhere within 20 cm upstream or downstream of the PM storage media (such as a filter). Measure this temperature with a bare-wire junction thermocouple with wires that are (0.500 ±0.025) mm diameter, or with another suitable instrument that has equivalent performance.

[79 FR 23754, Apr. 28, 2014, as amended at 81 FR 74162, Oct. 25, 2016]

EFFECTIVE DATE NOTE: At 86 FR 34534, June 29, 2021, §1065.140 was amended effective July 29, 2021.

§ 1065.145 Gaseous and PM probes, transfer lines, and sampling system components.

(a) *Continuous and batch sampling.* Determine the total mass of each constituent with continuous or batch sampling. Both types of sampling systems have probes, transfer lines, and other sampling system components that are described in this section.

(b) *Options for engines with multiple exhaust stacks.* Measure emissions from a test engine as described in this paragraph (b) if it has multiple exhaust stacks. You may choose to use different measurement procedures for different pollutants under this paragraph (b) for a given test. For purposes of this part 1065, the test engine includes all the devices related to converting the chemical energy in the fuel to the engine's mechanical output energy. This may or may not involve vehicle- or equipment-based devices. For example, all of an engine's cylinders are considered to be part of the test engine even if the exhaust is divided into separate exhaust stacks. As another example, all the cylinders of a diesel-electric locomotive are considered to be part of the test engine even if they transmit power through separate output shafts, such as might occur with multiple engine-generator sets working in tandem. Use one of the following procedures to measure emissions with multiple exhaust stacks:

(1) Route the exhaust flow from the multiple stacks into a single flow as described in § 1065.130(c)(6). Sample and measure emissions after the exhaust streams are mixed. Calculate the emissions as a single sample from the entire engine. We recommend this as the preferred option, since it requires only a single measurement and calculation of the exhaust molar flow for the entire engine.

(2) Sample and measure emissions from each stack and calculate emissions separately for each stack. Add the mass (or mass rate) emissions from each stack to calculate the emissions from the entire engine. Testing under this paragraph (b)(2) requires measuring or calculating the exhaust molar flow for each stack separately. If the exhaust molar flow in each stack cannot be calculated from combustion air flow(s), fuel flow(s), and measured gaseous emissions, and it is impractical to measure the exhaust molar flows directly, you may alternatively proportion the engine's calculated total exhaust molar flow rate (where the flow is calculated using combustion air mass flow(s), fuel mass flow(s), and emissions concentrations) based on exhaust molar flow measurements in each stack using a less accurate, nontraceable method. For example, you may use a total pressure probe and static pressure measurement in each stack.

(3) Sample and measure emissions from one stack and repeat the duty cycle as needed to collect emissions from each stack separately. Calculate the emissions from each stack and add the separate measurements to calculate the mass (or mass rate) emissions from the entire engine. Testing under this paragraph (b)(3) requires measuring or calculating the exhaust molar flow for each stack separately. You may alternatively proportion the engine's calculated total exhaust molar flow rate based on calculation and measurement limitations as described in paragraph (b)(2) of this section. Use the average of the engine's total power or work values from the multiple test runs to calculate brake-specific emissions. Divide the total mass (or mass rate) of each emission by the average power (or work). You may alternatively use the engine power or work associated with the corresponding stack during each test run if these values can be determined for each stack separately.

(4) Sample and measure emissions from each stack separately and calculate emissions for the entire engine based on the stack with the highest concentration. Testing under this paragraph (b)(4) requires only a single exhaust flow measurement or calculation for the entire engine. You may determine which stack has the highest concentration by performing multiple test runs, reviewing the results of earlier tests, or using good engineering judgment. Note that the highest concentration of different pollutants may occur in different stacks. Note also that the stack with the highest concentration of a pollutant during a test interval for

field testing may be a different stack than the one you identified based on average concentrations over a duty cycle.

(5) Sample emissions from each stack separately and combine the wet sample streams from each stack proportionally to the exhaust molar flows in each stack. Measure the emission concentrations and calculate the emissions for the entire engine based on these weighted concentrations. Testing under this paragraph (b)(5) requires measuring or calculating the exhaust molar flow for each stack separately during the test run to proportion the sample streams from each stack. If it is impractical to measure the exhaust molar flows directly, you may alternatively proportion the wet sample streams based on less accurate, non-traceable flow methods. For example, you may use a total pressure probe and static pressure measurement in each stack. The following restrictions apply for testing under this paragraph (b)(5):

(i) You must use an accurate, traceable measurement or calculation of the engine's total exhaust molar flow rate for calculating the mass of emissions from the entire engine.

(ii) You may dry the single, combined, proportional sample stream; you may not dry the sample streams from each stack separately.

(iii) You must measure and proportion the sample flows from each stack with active flow controls. For PM sampling, you must measure and proportion the diluted sample flows from each stack with active flow controls that use only smooth walls with no sudden change in cross-sectional area. For example, you may control the dilute exhaust PM sample flows using electrically conductive vinyl tubing and a control device that pinches the tube over a long enough transition length so no flow separation occurs.

(iv) For PM sampling, the transfer lines from each stack must be joined so the angle of the joining flows is 12.5° or less. Note that the exhaust manifold must meet the same specifications as the transfer line according to paragraph (d) of this section.

(6) Sample emissions from each stack separately and combine the wet sample streams from each stack equally. Measure the emission concentrations and calculate the emissions for the entire engine based on these measured concentrations. Testing under this paragraph (b)(6) assumes that the raw-exhaust and sample flows are the same for each stack. The following restrictions apply for testing under this paragraph (b)(6):

(i) You must measure and demonstrate that the sample flow from each stack is within 5% of the value from the stack with the highest sample flow. You may alternatively ensure that the stacks have equal flow rates without measuring sample flows by designing a passive sampling system that meets the following requirements:

(A) The probes and transfer line branches must be symmetrical, have equal lengths and diameters, have the same number of bends, and have no filters.

(B) If probes are designed such that they are sensitive to stack velocity, the stack velocity must be similar at each probe. For example, a static pressure probe used for gaseous sampling is not sensitive to stack velocity.

(C) The stack static pressure must be the same at each probe. You can meet this requirement by placing probes at the end of stacks that are vented to atmosphere.

(D) For PM sampling, the transfer lines from each stack must be joined so the angle of the joining flows is 12.5° or less. Note that the exhaust manifold must meet the same specifications as the transfer line according to paragraph (d) of this section.

(ii) You may use the procedure in this paragraph (b)(6) only if you perform an analysis showing that the resulting error due to imbalanced stack flows and concentrations is either at or below 2%. You may alternatively show that the resulting error does not impact your ability to demonstrate compliance with applicable standards. For example, you may use less accurate, non-traceable measurements of emission concentrations and molar flow in each stack and demonstrate that the imbalances in flows and concentrations cause 2% or less error.

(iii) For a two-stack engine, you may use the procedure in this paragraph (b)(6) only if you can show that the

stack with the higher flow has the lower average concentration for each pollutant over the duty cycle.

(iv) You must use an accurate, traceable measurement or calculation of the engine's total exhaust molar flow rate for calculating the mass of emissions from the entire engine.

(v) You may dry the single, equally combined, sample stream; you may not dry the sample streams from each stack separately.

(vi) You may determine your exhaust flow rates with a chemical balance of exhaust gas concentrations and either intake air flow or fuel flow.

(c) *Gaseous and PM sample probes.* A probe is the first fitting in a sampling system. It protrudes into a raw or diluted exhaust stream to extract a sample, such that its inside and outside surfaces are in contact with the exhaust. A sample is transported out of a probe into a transfer line, as described in paragraph (d) of this section. The following provisions apply to sample probes:

(1) *Probe design and construction.* Use sample probes with inside surfaces of 300 series stainless steel or, for raw exhaust sampling, use any nonreactive material capable of withstanding raw exhaust temperatures. Locate sample probes where constituents are mixed to their mean sample concentration. Take into account the mixing of any crankcase emissions that may be routed into the raw exhaust. Locate each probe to minimize interference with the flow to other probes. We recommend that all probes remain free from influences of boundary layers, wakes, and eddies—especially near the outlet of a raw-exhaust stack where unintended dilution might occur. Make sure that purging or back-flushing of a probe does not influence another probe during testing. You may use a single probe to extract a sample of more than one constituent as long as the probe meets all the specifications for each constituent.

(2) *Gaseous sample probes.* Use either single-port or multi-port probes for sampling gaseous emissions. You may orient these probes in any direction relative to the raw or diluted exhaust flow. For some probes, you must control sample temperatures, as follows:

(i) For probes that extract NO_X from diluted exhaust, control the probe's wall temperature to prevent aqueous condensation.

(ii) For probes that extract hydrocarbons for THC or NMHC analysis from the diluted exhaust of compression-ignition engines, two-stroke spark-ignition engines, or four-stroke spark-ignition engines at or below 19 kW, we recommend heating the probe to minimize hydrocarbon contamination consistent with good engineering judgment. If you routinely fail the contamination check in the 1065.520 pretest check, we recommend heating the probe section to approximately 190 °C to minimize contamination.

(3) *PM sample probes.* Use PM probes with a single opening at the end. Orient PM probes to face directly upstream. If you shield a PM probe's opening with a PM pre-classifier such as a hat, you may not use the preclassifier we specify in paragraph (f)(1) of this section. We recommend sizing the inside diameter of PM probes to approximate isokinetic sampling at the expected mean flow rate.

(d) *Transfer lines.* You may use transfer lines to transport an extracted sample from a probe to an analyzer, storage medium, or dilution system, noting certain restrictions for PM sampling in §1065.140(e). Minimize the length of all transfer lines by locating analyzers, storage media, and dilution systems as close to probes as practical. We recommend that you minimize the number of bends in transfer lines and that you maximize the radius of any unavoidable bend. Avoid using 90° elbows, tees, and cross-fittings in transfer lines. Where such connections and fittings are necessary, take steps, using good engineering judgment, to ensure that you meet the temperature tolerances in this paragraph (d). This may involve measuring temperature at various locations within transfer lines and fittings. You may use a single transfer line to transport a sample of more than one constituent, as long as the transfer line meets all the specifications for each constituent. The following construction and temperature tolerances apply to transfer lines:

(1) *Gaseous samples*. Use transfer lines with inside surfaces of 300 series stainless steel, PTFE, Viton™, or any other material that you demonstrate has better properties for emission sampling. For raw exhaust sampling, use a non-reactive material capable of withstanding raw exhaust temperatures. You may use in-line filters if they do not react with exhaust constituents and if the filter and its housing meet the same temperature requirements as the transfer lines, as follows:

(i) For NO_X transfer lines upstream of either an NO_2-to-NO converter that meets the specifications of § 1065.378 or a chiller that meets the specifications of § 1065.376, maintain a sample temperature that prevents aqueous condensation.

(ii) For THC transfer lines for testing compression-ignition engines, two-stroke spark-ignition engines, or four-stroke spark-ignition engines at or below 19 kW, maintain a wall temperature tolerance throughout the entire line of (191 ±11) °C. If you sample from raw exhaust, you may connect an unheated, insulated transfer line directly to a probe. Design the length and insulation of the transfer line to cool the highest expected raw exhaust temperature to no lower than 191 °C, as measured at the transfer line's outlet. For dilute sampling, you may use a transition zone between the probe and transfer line of up to 92 cm to allow your wall temperature to transition to (191 ±11) °C.

(2) *PM samples*. We recommend heated transfer lines or a heated enclosure to minimize temperature differences between transfer lines and exhaust constituents. Use transfer lines that are inert with respect to PM and are electrically conductive on the inside surfaces. We recommend using PM transfer lines made of 300 series stainless steel. Electrically ground the inside surface of PM transfer lines.

(e) *Optional sample-conditioning components for gaseous sampling*. You may use the following sample-conditioning components to prepare gaseous samples for analysis, as long as you do not install or use them in a way that adversely affects your ability to show that your engines comply with all applicable gaseous emission standards.

(1) *NO_2-to-NO converter*. You may use an NO_2-to-NO converter that meets the converter conversion verification specified in § 1065.378 at any point upstream of a NO_X analyzer, sample bag, or other storage medium.

(2) *Sample dryer*. You may use either type of sample dryer described in this paragraph (e)(2) to decrease the effects of water on gaseous emission measurements. You may not use a chemical dryer, or use dryers upstream of PM sample filters.

(i) *Osmotic-membrane*. You may use an osmotic-membrane dryer upstream of any gaseous analyzer or storage medium, as long as it meets the temperature specifications in paragraph (d)(1) of this section. Because osmotic-membrane dryers may deteriorate after prolonged exposure to certain exhaust constituents, consult with the membrane manufacturer regarding your application before incorporating an osmotic-membrane dryer. Monitor the dewpoint, T_{dew}, and absolute pressure, p_{total}, downstream of an osmotic-membrane dryer. You may use continuously recorded values of T_{dew} and p_{total} in the amount of water calculations specified in § 1065.645. For our testing we may use average temperature and pressure values over the test interval or a nominal pressure value that we estimate as the dryer's average pressure expected during testing as constant values in the amount of water calculations specified in § 1065.645. For your testing, you may use the maximum temperature or minimum pressure values observed during a test interval or duty cycle or the high alarm temperature setpoint or low alarm pressure setpoint as constant values in the calculations specified in § 1065.645. For your testing, you may also use a nominal p_{total}, which you may estimate as the dryer's lowest absolute pressure expected during testing.

(ii) *Thermal chiller*. You may use a thermal chiller upstream of some gas analyzers and storage media. You may not use a thermal chiller upstream of a THC measurement system for compression-ignition engines, two-stroke spark-ignition engines, or four-stroke spark-ignition engines at or below 19 kW. If you use a thermal chiller upstream of an NO_2-to-NO converter or in

a sampling system without an NO_2-to-NO converter, the chiller must meet the NO_2 loss-performance check specified in § 1065.376. Monitor the dewpoint, T_{dew}, and absolute pressure, p_{total}, downstream of a thermal chiller. You may use continuously recorded values of T_{dew} and p_{total} in the amount of water calculations specified in § 1065.645. If it is valid to assume the degree of saturation in the thermal chiller, you may calculate T_{dew} based on the known chiller performance and continuous monitoring of chiller temperature, $T_{chiller}$. If it is valid to assume a constant temperature offset between $T_{chiller}$ and T_{dew}, due to a known and fixed amount of sample reheat between the chiller outlet and the temperature measurement location, you may factor in this assumed temperature offset value into emission calculations. If we ask for it, you must show by engineering analysis or by data the validity of any assumptions allowed by this paragraph (e)(2)(ii). For our testing we may use average temperature and pressure values over the test interval or a nominal pressure value that we estimate as the dryer's average pressure expected during testing as constant values in the calculations specified in § 1065.645. For your testing you may use the maximum temperature and minimum pressure values observed during a test interval or duty cycle or the high alarm temperature setpoint and the low alarm pressure setpoint as constant values in the amount of water calculations specified in § 1065.645. For your testing you may also use a nominal p_{total}, which you may estimate as the dryer's lowest absolute pressure expected during testing.

(3) *Sample pumps*. You may use sample pumps upstream of an analyzer or storage medium for any gas. Use sample pumps with inside surfaces of 300 series stainless steel, PTFE, or any other material that you demonstrate has better properties for emission sampling. For some sample pumps, you must control temperatures, as follows:

(i) If you use a NO_X sample pump upstream of either an NO_2-to-NO converter that meets § 1065.378 or a chiller that meets § 1065.376, it must be heated to prevent aqueous condensation.

(ii) For testing compression-ignition engines, two-stroke spark-ignition engines, or four-stroke spark-ignition engines at or below 19 kW, if you use a THC sample pump upstream of a THC analyzer or storage medium, its inner surfaces must be heated to a tolerance of (191 ±11) °C.

(4) *Ammonia Scrubber*. You may use ammonia scrubbers for any or all gaseous sampling systems to prevent interference with NH_3, poisoning of the NO_2-to-NO converter, and deposits in the sampling system or analyzers. Follow the ammonia scrubber manufacturer's recommendations or use good engineering judgment in applying ammonia scrubbers.

(f) *Optional sample-conditioning components for PM sampling*. You may use the following sample-conditioning components to prepare PM samples for analysis, as long as you do not install or use them in a way that adversely affects your ability to show that your engines comply with the applicable PM emission standards. You may condition PM samples to minimize positive and negative biases to PM results, as follows:

(1) *PM preclassifier*. You may use a PM preclassifier to remove large-diameter particles. The PM preclassifier may be either an inertial impactor or a cyclonic separator. It must be constructed of 300 series stainless steel. The preclassifier must be rated to remove at least 50% of PM at an aerodynamic diameter of 10 μm and no more than 1% of PM at an aerodynamic diameter of 1 μm over the range of flow rates for which you use it. Follow the preclassifier manufacturer's instructions for any periodic servicing that may be necessary to prevent a buildup of PM. Install the preclassifier in the dilution system downstream of the last dilution stage. Configure the preclassifier outlet with a means of bypassing any PM sample media so the preclassifier flow may be stabilized before starting a test. Locate PM sample media within 75 cm downstream of the preclassifier's exit. You may not use this preclassifier if you use a PM probe that already has a preclassifier. For example, if you use a hat-shaped preclassifier that is located immediately upstream of the probe in such a

way that it forces the sample flow to change direction before entering the probe, you may not use any other preclassifier in your PM sampling system.

(2) *Other components*. You may request to use other PM conditioning components upstream of a PM preclassifier, such as components that condition humidity or remove gaseous-phase hydrocarbons from the diluted exhaust stream. You may use such components only if we approve them under § 1065.10.

[75 FR 23030, Apr. 30, 2010; 79 FR 23756, Apr. 28, 2014]

EFFECTIVE DATE NOTE: At 86 FR 34534, June 29, 2021, § 1065.145 was amended, effective July 29, 2021.

§ 1065.150 Continuous sampling.

You may use continuous sampling techniques for measurements that involve raw or dilute sampling. Make sure continuous sampling systems meet the specifications in § 1065.145. Make sure continuous analyzers meet the specifications in subparts C and D of this part.

§ 1065.170 Batch sampling for gaseous and PM constituents.

Batch sampling involves collecting and storing emissions for later analysis. Examples of batch sampling include collecting and storing gaseous emissions in a bag or collecting and storing PM on a filter. You may use batch sampling to store emissions that have been diluted at least once in some way, such as with CVS, PFD, or BMD. You may use batch-sampling to store undiluted emissions.

(a) *Sampling methods*. If you extract from a constant-volume flow rate, sample at a constant-volume flow rate as follows:

(1) Verify proportional sampling after an emission test as described in § 1065.545. Use good engineering judgment to select storage media that will not significantly change measured emission levels (either up or down). For example, do not use sample bags for storing emissions if the bags are permeable with respect to emissions or if they off gas emissions to the extent that it affects your ability to demonstrate compliance with the applicable gaseous emission standards. As another example, do not use PM filters that irreversibly absorb or adsorb gases to the extent that it affects your ability to demonstrate compliance with the applicable PM emission standard.

(2) You must follow the requirements in § 1065.140(e)(2) related to PM dilution ratios. For each filter, if you expect the net PM mass on the filter to exceed 400 μg, assuming a 38 mm diameter filter stain area, you may take the following actions in sequence:

(i) For discrete-mode testing only, you may reduce sample time as needed to target a filter loading of 400 μg, but not below the minimum sample time specified in the standard-setting part.

(ii) Reduce filter face velocity as needed to target a filter loading of 400 μg, down to 50 cm/s or less.

(iii) Increase overall dilution ratio above the values specified in § 1065.140(e)(2) to target a filter loading of 400 μg.

(b) *Gaseous sample storage media*. Store gas volumes in sufficiently clean containers that minimally off-gas or allow permeation of gases. Use good engineering judgment to determine acceptable thresholds of storage media cleanliness and permeation. To clean a container, you may repeatedly purge and evacuate a container and you may heat it. Use a flexible container (such as a bag) within a temperature-controlled environment, or use a temperature controlled rigid container that is initially evacuated or has a volume that can be displaced, such as a piston and cylinder arrangement. Use containers meeting the specifications in the Table 1 of this section, noting that you may request to use other container materials under § 1065.10. Sample temperatures must stay within the following ranges for each container material:

(1) Up to 40 °C for Tedlar™ and Kynar™..

(2) (191 ±11) °C for Teflon™ and 300 series stainless steel used with measuring THC or NMHC from compression-ignition engines, two-stroke spark-ignition engines, and four-stroke spark-ignition engines at or below 19 kW. For all other engines and pollutants, these materials may be used for sample temperatures up to 202 °C.

TABLE 1 OF § 1065.170—CONTAINER MATERIALS FOR GASEOUS BATCH SAMPLING

Emissions	Engine type	
	Compression-ignition Two-stroke spark-ignition Four-stroke spark-ignition at or below 19 kW	All other engines
CO, CO_2, O_2, CH_4, C_2H_6, C_3H_8, NO, NO_2, N_2O.	Tedlar™, Kynar™, Teflon™, or 300 series stainless steel.	Tedlar™, Kynar™, Teflon™, or 300 series stainless steel.
THC, NMHC	Teflon™ or 300 series stainless steel	Tedlar™, Kynar™, Teflon™, or 300 series stainless steel.

(c) *PM sample media*. Apply the following methods for sampling particulate emissions:

(1) If you use filter-based sampling media to extract and store PM for measurement, your procedure must meet the following specifications:

(i) If you expect that a filter's total surface concentration of PM will exceed 400 μg, assuming a 38 mm diameter filter stain area, for a given test interval, you may use filter media with a minimum initial collection efficiency of 98%; otherwise you must use a filter media with a minimum initial collection efficiency of 99.7%. Collection efficiency must be measured as described in ASTM D2986 (incorporated by reference in § 1065.1010), though you may rely on the sample-media manufacturer's measurements reflected in their product ratings to show that you meet this requirement.

(ii) The filter must be circular, with an overall diameter of 46.50 ±0.6 mm and an exposed diameter of at least 38 mm. See the cassette specifications in paragraph (c)(1)(vii) of this section.

(iii) We highly recommend that you use a pure PTFE filter material that does not have any flow-through support bonded to the back and has an overall thickness of 40 ±20 μm. An inert polymer ring may be bonded to the periphery of the filter material for support and for sealing between the filter cassette parts. We consider Polymethylpentene (PMP) and PTFE inert materials for a support ring, but other inert materials may be used. See the cassette specifications in paragraph (c)(1)(vii) of this section. We allow the use of PTFE-coated glass fiber filter material, as long as this filter media selection does not affect your ability to demonstrate compliance with the applicable standards, which we base on a pure PTFE filter material. Note that we will use pure PTFE filter material for compliance testing, and we may require you to use pure PTFE filter material for any compliance testing we require, such as for selective enforcement audits.

(iv) You may request to use other filter materials or sizes under the provisions of § 1065.10.

(v) To minimize turbulent deposition and to deposit PM evenly on a filter, use a filter holder with a 12.5° (from center) divergent cone angle to transition from the transfer-line inside diameter to the exposed diameter of the filter face. Use 300 series stainless steel for this transition.

(vi) Maintain a filter face velocity near 100 cm/s with less than 5% of the recorded flow values exceeding 100 cm/s, unless you expect the net PM mass on the filter to exceed 400 μg, assuming a 38 mm diameter filter stain area. Measure face velocity as the volumetric flow rate of the sample at the pressure upstream of the filter and temperature of the filter face as measured in § 1065.140(e), divided by the filter's exposed area. You may use the exhaust stack or CVS tunnel pressure for the upstream pressure if the pressure drop through the PM sampler up to the filter is less than 2 kPa.

(vii) Use a clean cassette designed to the specifications of Figure 1 of § 1065.170. In auto changer configurations, you may use cassettes of similar design. Cassettes must be made of one of the following materials: Delrin™, 300 series stainless steel, polycarbonate, acrylonitrile-butadiene-styrene (ABS) resin, or conductive polypropylene. We recommend that you keep filter cassettes clean by periodically washing or wiping them with a compatible solvent applied using a

lint-free cloth. Depending upon your cassette material, ethanol (C_2H_5OH) might be an acceptable solvent. Your cleaning frequency will depend on your engine's PM and HC emissions.

(viii) If you keep the cassette in the filter holder after sampling, prevent flow through the filter until either the holder or cassette is removed from the PM sampler. If you remove the cassettes from filter holders after sampling, transfer the cassette to an individual container that is covered or sealed to prevent communication of semi-volatile matter from one filter to another. If you remove the filter holder, cap the inlet and outlet. Keep them covered or sealed until they return to the stabilization or weighing environments.

(ix) The filters should not be handled outside of the PM stabilization and weighing environments and should be loaded into cassettes, filter holders, or auto changer apparatus before removal from these environments.

(2) You may use other PM sample media that we approve under § 1065.10, including non-filtering techniques. For example, you might deposit PM on an inert substrate that collects PM using electrostatic, thermophoresis, inertia, diffusion, or some other deposition mechanism, as approved.

Figure 1 of § 1065.170—PM filter cassette specifications.

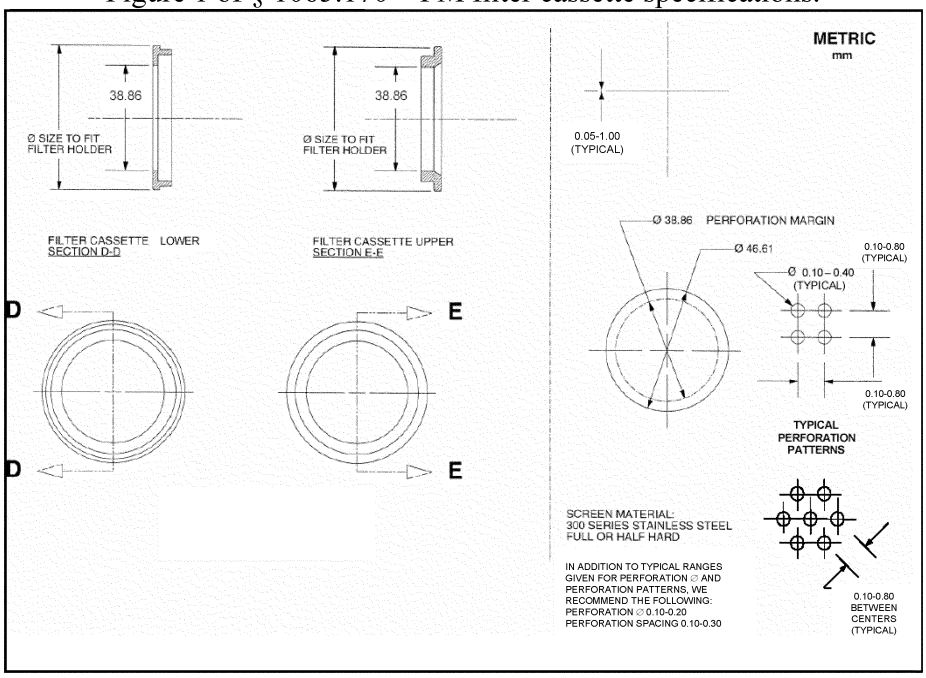

[70 FR 40516, July 13, 2005, as amended at 73 FR 37298, June 30, 2008; 73 FR 59321, Oct. 8, 2008; 76 FR 57440, Sept. 15, 2011;79 FR 23757, Apr. 28, 2014; 81 FR 74162, Oct. 25, 2016]

EFFECTIVE DATE NOTE: At 86 FR 34534, June 29, 2021, § 1065.170 was amended, effective July 29, 2021.

§ 1065.190 PM-stabilization and weighing environments for gravimetric analysis.

(a) This section describes the two environments required to stabilize and weigh PM for gravimetric analysis: the PM stabilization environment, where filters are stored before weighing; and

the weighing environment, where the balance is located. The two environments may share a common space. These volumes may be one or more rooms, or they may be much smaller, such as a glove box or an automated weighing system consisting of one or more countertop-sized environments.

(b) We recommend that you keep both the stabilization and the weighing environments free of ambient contaminants, such as dust, aerosols, or semi-volatile material that could contaminate PM samples. We recommend that these environments conform with an ''as-built'' Class Six clean room specification according to ISO 14644–1 (incorporated by reference in § 1065.1010); however, we also recommend that you deviate from ISO 14644–1 as necessary to minimize air motion that might affect weighing. We recommend maximum air-supply and air-return velocities of 0.05 m/s in the weighing environment.

(c) Verify the cleanliness of the PM-stabilization environment using reference filters, as described in § 1065.390(d).

(d) Maintain the following ambient conditions within the two environments during all stabilization and weighing:

(1) *Ambient temperature and tolerances.* Maintain the weighing environment at a tolerance of (22 ±1) °C. If the two environments share a common space, maintain both environments at a tolerance of (22 ±1) °C. If they are separate, maintain the stabilization environment at a tolerance of (22 ±3) °C.

(2) *Dewpoint.* Maintain a dewpoint of 9.5 °C in both environments. This dewpoint will control the amount of water associated with sulfuric acid (H_2SO_4) PM, such that 1.2216 grams of water will be associated with each gram of H_2SO_4.

(3) *Dewpoint tolerances.* If the expected fraction of sulfuric acid in PM is unknown, we recommend controlling dewpoint at within ±1 °C tolerance. This would limit any dewpoint-related change in PM to less than ±2%, even for PM that is 50% sulfuric acid. If you know your expected fraction of sulfuric acid in PM, we recommend that you select an appropriate dewpoint tolerance for showing compliance with emission standards using the following table as a guide:

TABLE 1 OF § 1065.190—DEWPOINT TOLERANCE AS A FUNCTION OF % PM CHANGE AND % SULFURIC ACID PM

Expected sulfuric acid fraction of PM	±0.5% PM mass change	±1% PM mass change	±2% PM mass change
5%	±3 °C	±6 °C	±12 °C
50%	±0.3 °C	±0.6 °C	±1.2 °C
100%	±0.15 °C	±0.3 °C	±0.6 °C

(e) Verify the following ambient conditions using measurement instruments that meet the specifications in subpart C of this part:

(1) Continuously measure dewpoint and ambient temperature. Use these values to determine if the stabilization and weighing environments have remained within the tolerances specified in paragraph (d) of this section for at least 60 min. before weighing sample media (e.g., filters). We recommend that you use an interlock that automatically prevents the balance from reporting values if either of the environments have not been within the applicable tolerances for the past 60 min.

(2) Continuously measure atmospheric pressure within the weighing environment. An acceptable alternative is to use a barometer that measures atmospheric pressure outside the weighing environment, as long as you can ensure that atmospheric pressure at the balance is always within ±100 Pa of that outside environment during weighing operations. Record atmospheric pressure as you weigh filters, and use these pressure values to perform the buoyancy correction in § 1065.690.

(f) We recommend that you install a balance as follows:

(1) Install the balance on a vibration-isolation platform to isolate it from external noise and vibration.

(2) Shield the balance from convective airflow with a static-dissipating draft shield that is electrically grounded.

(3) Follow the balance manufacturer's specifications for all preventive maintenance.

(4) Operate the balance manually or as part of an automated weighing system.

(g) Minimize static electric charge in the balance environment, as follows:

(1) Electrically ground the balance.

(2) Use 300 series stainless steel tweezers if PM sample media (e.g., filters) must be handled manually.

(3) Ground tweezers with a grounding strap, or provide a grounding strap for the operator such that the grounding strap shares a common ground with the balance. Make sure grounding straps have an appropriate resistor to protect operators from accidental shock.

(4) Provide a static-electricity neutralizer that is electrically grounded in common with the balance to remove static charge from PM sample media (e.g., filters), as follows:

(i) You may use radioactive neutralizers such as a Polonium (^{210}Po) source. Replace radioactive sources at the intervals recommended by the neutralizer manufacturer.

(ii) You may use other neutralizers, such as corona-discharge ionizers. If you use a corona-discharge ionizer, we recommend that you monitor it for neutral net charge according to the ionizer manufacturer's recommendations.

(5) We recommend that you use a device to monitor the static charge of PM sample media (e.g., filter) surface.

(6) We recommend that you neutralize PM sample media (e.g., filters) to within ±2.0 V of neutral. Measure static voltages as follows:

(i) Measure static voltage of PM sample media (e.g., filters) according to the electrostatic voltmeter manufacturer's instructions.

(ii) Measure static voltage of PM sample media (e.g., filters) while the media is at least 15 cm away from any grounded surfaces to avoid mirror image charge interference.

[70 FR 40516, July 13, 2005, as amended at 73 FR 37299, June 30, 2008; 73 FR 59323, Oct. 8, 2008; 76 FR 57440, Sept. 15, 2011]

§ 1065.195 PM-stabilization environment for in-situ analyzers.

(a) This section describes the environment required to determine PM in-situ. For in-situ analyzers, such as an inertial balance, this is the environment within a PM sampling system that surrounds the PM sample media (e.g., filters). This is typically a very small volume.

(b) Maintain the environment free of ambient contaminants, such as dust, aerosols, or semi-volatile material that could contaminate PM samples. Filter all air used for stabilization with HEPA filters. Ensure that HEPA filters are installed properly so that background PM does not leak past the HEPA filters.

(c) Maintain the following thermodynamic conditions within the environment before measuring PM:

(1) *Ambient temperature.* Select a nominal ambient temperature, T_{amb}, between (42 and 52) °C. Maintain the ambient temperature within ±1.0 °C of the selected nominal value.

(2) *Dewpoint.* Select a dewpoint, T_{dew}, that corresponds to T_{amb} such that $T_{dew} = (0.95T_{amb} - 11.40)$ °C. The resulting dewpoint will control the amount of water associated with sulfuric acid (H_2SO_4) PM, such that 1.1368 grams of water will be associated with each gram of H_2SO_4. For example, if you select a nominal ambient temperature of 47 °C, set a dewpoint of 33.3 °C.

(3) *Dewpoint tolerance.* If the expected fraction of sulfuric acid in PM is unknown, we recommend controlling dewpoint within ±1.0 °C. This would limit any dewpoint-related change in PM to less than ±2%, even for PM that is 50% sulfuric acid. If you know your expected fraction of sulfuric acid in PM, we recommend that you select an appropriate dewpoint tolerance for showing compliance with emission standards using Table 1 of §1065.190 as a guide:

(4) *Absolute pressure.* Use good engineering judgment to maintain a tolerance of absolute pressure if your PM measurement instrument requires it.

(d) Continuously measure dewpoint, temperature, and pressure using measurement instruments that meet the PM-stabilization environment specifications in subpart C of this part. Use these values to determine if the in-situ stabilization environment is within the tolerances specified in paragraph (c) of this section. Do not use any PM quantities that are recorded when any of these parameters exceed the applicable tolerances.

(e) If you use an inertial PM balance, we recommend that you install it as follows:

(1) Isolate the balance from any external noise and vibration that is within a frequency range that could affect the balance.

(2) Follow the balance manufacturer's specifications.

(f) If static electricity affects an inertial balance, you may use a static neutralizer, as follows:

(1) You may use a radioactive neutralizer such as a Polonium (^{210}Po) source or a Krypton (^{85}Kr) source. Replace radioactive sources at the intervals recommended by the neutralizer manufacturer.

(2) You may use other neutralizers, such as a corona-discharge ionizer. If you use a corona-discharge ionizer, we recommend that you monitor it for neutral net charge according to the ionizer manufacturer's recommendations.

[70 FR 40516, July 13, 2005, as amended at 73 FR 32799, June 30, 2008]

Subpart C—Measurement Instruments

§ 1065.201 Overview and general provisions.

(a) *Scope.* This subpart specifies measurement instruments and associated system requirements related to emission testing in a laboratory or similar environment and in the field. This includes laboratory instruments and portable emission measurement systems (PEMS) for measuring engine parameters, ambient conditions, flow-related parameters, and emission concentrations.

(b) *Instrument types.* You may use any of the specified instruments as described in this subpart to perform emission tests. If you want to use one of these instruments in a way that is not specified in this subpart, or if you want to use a different instrument, you must first get us to approve your alternate procedure under § 1065.10. Where we specify more than one instrument for a particular measurement, we may identify which instrument serves as the reference for comparing with an alternate procedure. You may generally use instruments with compensation algorithms that are functions of other gaseous measurements and the known or assumed fuel properties for the test fuel. The target value for any compensation algorithm is 0% (that is, no bias high and no bias low), regardless of the uncompensated signal's bias.

(c) *Measurement systems.* Assemble a system of measurement instruments that allows you to show that your engines comply with the applicable emission standards, using good engineering judgment. When selecting instruments, consider how conditions such as vibration, temperature, pressure, humidity, viscosity, specific heat, and exhaust composition (including trace concentrations) may affect instrument compatibility and performance.

(d) *Redundant systems.* For all measurement instruments described in this subpart, you may use data from multiple instruments to calculate test results for a single test. If you use redundant systems, use good engineering judgment to use multiple measured values in calculations or to disregard individual measurements. Note that you must keep your results from all measurements. This requirement applies whether or not you actually use the measurements in your calculations.

(e) *Range.* You may use an instrument's response above 100% of its operating range if this does not affect your ability to show that your engines comply with the applicable emission standards. Note that we require additional testing and reporting if an analyzer responds above 100% of its range. Auto-

ranging analyzers do not require additional testing or reporting.

(f) *Related subparts for laboratory testing*. Subpart D of this part describes how to evaluate the performance of the measurement instruments in this subpart. In general, if an instrument is specified in a specific section of this subpart, its calibration and verifications are typically specified in a similarly numbered section in subpart D of this part. For example, § 1065.290 gives instrument specifications for PM balances and § 1065.390 describes the corresponding calibrations and verifications. Note that some instruments also have other requirements in other sections of subpart D of this part. Subpart B of this part identifies specifications for other types of equipment, and subpart H of this part specifies engine fluids and analytical gases.

(g) *Field testing and testing with PEMS*. Subpart J of this part describes how to use these and other measurement instruments for field testing and other PEMS testing.

(h) *Recommended practices*. This subpart identifies a variety of recommended but not required practices for proper measurements. We believe in most cases it is necessary to follow these recommended practices for accurate and repeatable measurements. However, we do not specifically require you to follow these recommended practices to perform a valid test, as long as you meet the required calibrations and verifications of measurement systems specified in subpart D of this part. Similarly, we are not required to follow all recommended practices, as long as we meet the required calibrations and verifications. Our decision to follow or not follow a given recommendation when we perform a test does not depend on whether you followed it during your testing.

[70 FR 40516, July 13, 2005, as amended at 73 FR 37299, June 30, 2008; 75 FR 23033, Apr. 30, 2010; 79 FR 23758, Apr. 29, 2014]

§ 1065.202 Data updating, recording, and control.

Your test system must be able to update data, record data and control systems related to operator demand, the dynamometer, sampling equipment, and measurement instruments. Set up the measurement and recording equipment to avoid aliasing by ensuring that the sampling frequency is at least double that of the signal you are measuring, consistent with good engineering judgment; this may require increasing the sampling rate or filtering the signal. Use data acquisition and control systems that can record at the specified minimum frequencies, as follows:

TABLE 1 OF § 1065.202—DATA RECORDING AND CONTROL MINIMUM FREQUENCIES

Applicable test protocol section	Measured values	Minimum command and control frequency [a]	Minimum recording frequency [b c]
§ 1065.510	Speed and torque during an engine step-map.	1 Hz	1 mean value per step.
§ 1065.510	Speed and torque during an engine sweep-map.	5 Hz	1 Hz means.
§ 1065.514; § 1065.530	Transient duty cycle reference and feedback speeds and torques.	5 Hz	1 Hz means.
§ 1065.514; § 1065.530	Steady-state and ramped-modal duty cycle reference and feedback speeds and torques.	1 Hz	1 Hz.
§ 1065.520; § 1065.530; § 1065.550	Continuous concentrations of raw or dilute analyzers.		1 Hz.
§ 1065.520; § 1065.530 § 1065.550	Batch concentrations of raw or dilute analyzers.		1 mean value per test interval.
§ 1065.530; § 1065.545	Diluted exhaust flow rate from a CVS with a heat exchanger upstream of the flow measurement.		1 Hz.
§ 1065.530; § 1065.545	Diluted exhaust flow rate from a CVS without a heat exchanger upstream of the flow measurement.	5 Hz	1 Hz means.
§ 1065.530; § 1065.545	Intake-air or raw-exhaust flow rate		1 Hz means.

TABLE 1 OF § 1065.202—DATA RECORDING AND CONTROL MINIMUM FREQUENCIES—Continued

Applicable test protocol section	Measured values	Minimum command and control frequency [a]	Minimum recording frequency [b c]
§ 1065.530; § 1065.545	Dilution air flow if actively controlled (for example, a partial-flow PM sampling system) [d].	5 Hz	1 Hz means.
§ 1065.530; § 1065.545	Sample flow from a CVS that has a heat exchanger.	1 Hz	1 Hz.
§ 1065.530; § 1065.545	Sample flow from a CVS that does not have a heat exchanger.	5 Hz	1 Hz means.

[a] The specifications for minimum command and control frequency do not apply for CFVs that are not using active control.
[b] 1 Hz means are data reported from the instrument at a higher frequency, but recorded as a series of 1 s mean values at a rate of 1 Hz.
[c] For CFVs in a CVS, the minimum recording frequency is 1 Hz. The minimum recording frequency does not apply for CFVs used to control sampling from a CVS utilizing CFVs.
[d] Dilution air flow specifications do not apply for CVS dilution air.

[79 FR 23759, Apr. 28, 2014, as amended at 81 FR 74162, Oct. 25, 2016]

§ 1065.205 Performance specifications for measurement instruments.

Your test system as a whole must meet all the calibrations, verifications, and test-validation criteria specified outside this section for laboratory testing or field testing, as applicable. We recommend that your instruments meet the specifications in Table 1 of this section for all ranges you use for testing. We also recommend that you keep any documentation you receive from instrument manufacturers showing that your instruments meet the specifications in Table 1 of this section.

TABLE 1 OF § 1065.205—RECOMMENDED PERFORMANCE SPECIFICATIONS FOR MEASUREMENT INSTRUMENTS

Measurement instrument	Measured quantity symbol	Complete system rise time (t_{10-90}) and fall time (t_{90-10}) [a]	Recording update frequency	Accuracy [b]	Repeatability [b]	Noise [b]
Engine speed transducer.	f_n	1 s	1 Hz means	2% of pt. or 0.5% of max.	1% of pt. or 0.25% of max.	0.05% of max.
Engine torque transducer.	T	1 s	1 Hz means	2% of pt. or 1% of max.	1% of pt. or 0.5% of max.	0.05% of max.
Electrical work (active-power meter).	W	1 s	1 Hz means	2% of pt. or 0.5% of max.	1% of pt. or 0.25% of max.	0.05% of max.
General pressure transducer (not a part of another instrument).	p	5 s	1 Hz	2% of pt. or 1% of max.	1% of pt. or 0.5% of max.	0.1% of max.
Atmospheric pressure meter for PM-stabilization and balance environments.	p_{atmos}	50 s	5 times per hour.	50 Pa	25 Pa	5 Pa
General purpose atmospheric pressure meter.	p_{atmos}	50 s	5 times per hour.	250 Pa	100Pa	50 Pa
Temperature sensor for PM-stabilization and balance environments.	T	50 s	0.1 Hz	0.25 K	0.1 K	0.1 K
Other temperature sensor (not a part of another instrument).	T	10 s	0.5 Hz	0.4% of pt. K or 0.2% of max K.	0.2% of pt. K or 0.1% of max K.	0.1% of max.
Dewpoint sensor for intake air, PM-stabilization and balance environments.	T_{dew}	50 s	0.1 Hz	0.25 K	0.1 K	0.02 K

TABLE 1 OF § 1065.205—RECOMMENDED PERFORMANCE SPECIFICATIONS FOR MEASUREMENT INSTRUMENTS—Continued

Measurement instrument	Measured quantity symbol	Complete system rise time (t_{10-90}) and fall time (t_{90-10}) [a]	Recording update frequency	Accuracy [b]	Repeatability [b]	Noise [b]
Other dewpoint sensor.	T_{dew}	50 s	0.1 Hz	1 K	0.5 K	0.1 K
Fuel flow meter [c] (Fuel totalizer).	$\dot{m}$	5 s (—)	1 Hz (—)	2% of pt. or 1.5% of max.	1% of pt. or 0.75% of max.	0.5% of max.
Total diluted exhaust meter (CVS) [c] (With heat exchanger before meter).	$\dot{n}$	1 s (5 s)	1 Hz means (1 Hz)	2% of pt. or 1.5% of max.	1% of pt. or 0.75% of max.	1% of max.
Dilution air, inlet air, exhaust, and sample flow meters [c].	$\dot{n}$	1 s	1 Hz means of 5 Hz samples.	2.5% of pt. or 1.5% of max.	1.25% of pt. or 0.75% of max.	1% of max.
Continuous gas analyzer.	x	5 s	1 Hz	2% of pt. or 2% of meas.	1% of pt. or 1% of meas.	1% of max.
Batch gas analyzer	x			2% of pt. or 2% of meas.	1% of pt. or 1% of meas.	1% of max.
Gravimetric PM balance.	m_{PM}			See § 1065.790	0.5 µg	
Inertial PM balance	m_{PM}	5 s	1 Hz	2% of pt. or 2% of meas.	1% of pt. or 1% of meas.	0.2% of max

[a] The performance specifications identified in the table apply separately for rise time and fall time.
[b] Accuracy, repeatability, and noise are all determined with the same collected data, as described in § 1065.305, and based on absolute values. "pt." refers to the overall flow-weighted mean value expected at the standard; "max" refers to the peak value expected at the standard over any test interval, not the maximum of the instrument's range; "meas" refers to the actual flow-weighted mean measured over any test interval.
[c] The procedure for accuracy, repeatability and noise measurement described in § 1065.305 may be modified for flow meters to allow noise to be measured at the lowest calibrated value instead of zero flow rate.

[79 FR 23759, Apr. 28, 2014]

EFFECTIVE DATE NOTE: At 86 FR 34534, June 29, 2021, § 1065.205 was revised, effective July 29, 2021.

MEASUREMENT OF ENGINE PARAMETERS AND AMBIENT CONDITIONS

§ 1065.210 Work input and output sensors.

(a) *Application*. Use instruments as specified in this section to measure work inputs and outputs during engine operation. We recommend that you use sensors, transducers, and meters that meet the specifications in Table 1 of § 1065.205. Note that your overall systems for measuring work inputs and outputs must meet the linearity verifications in § 1065.307. We recommend that you measure work inputs and outputs where they cross the system boundary as shown in Figure 1 of § 1065.210. The system boundary is different for air-cooled engines than for liquid-cooled engines. If you choose to measure work before or after a work conversion, relative to the system boundary, use good engineering judgment to estimate any work-conversion losses in a way that avoids overestimation of total work. For example, if it is impractical to instrument the shaft of an exhaust turbine generating electrical work, you may decide to measure its converted electrical work. As another example, you may decide to measure the tractive (i.e., electrical output) power of a locomotive, rather than the brake power of the locomotive engine. In these cases, divide the electrical work by accurate values of electrical generator efficiency ($\eta<1$), or assume an efficiency of 1 ($\eta = 1$), which would over-estimate brake-specific emissions. For the example of using locomotive tractive power with a generator efficiency of 1 ($\eta = 1$), this means using the tractive power as the brake power in emission calculations. Do not underestimate any work conversion efficiencies for any components outside the system boundary that do not return work into the system boundary. And do not overestimate any work conversion efficiencies for components outside the system boundary that do return work into the system boundary.

In all cases, ensure that you are able to accurately demonstrate compliance with the applicable standards.

Figure 1 of §1065.210: Work inputs, outputs, and system boundaries for liquid-cooled and air-cooled engines.

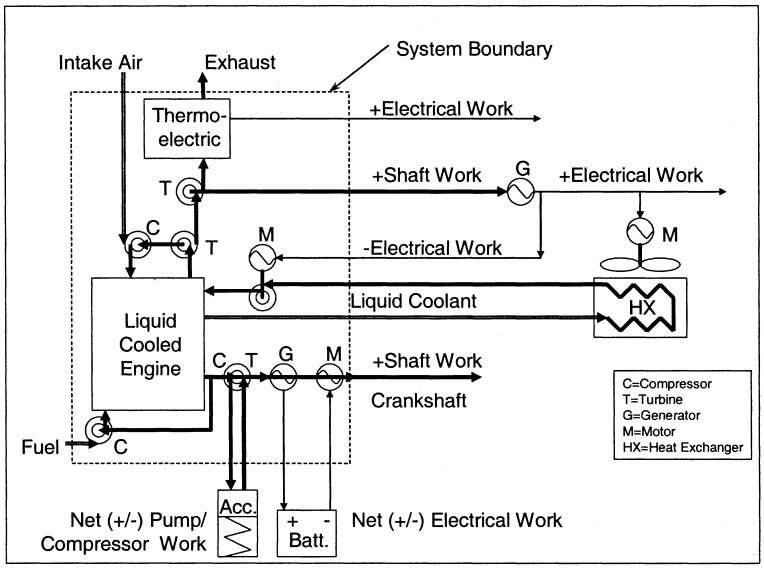

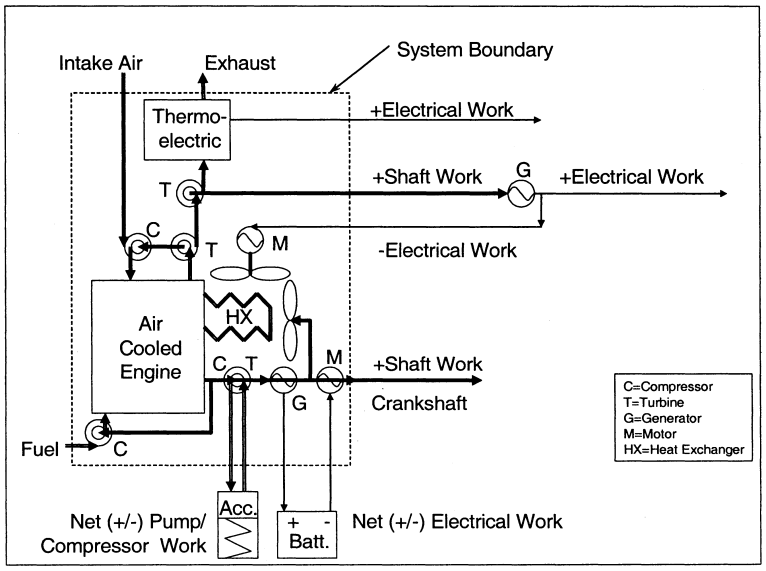

(b) *Shaft work*. Use speed and torque transducer outputs to calculate total work according to § 1065.650.

(1) *Speed*. Use a magnetic or optical shaft-position detector with a resolution of at least 60 counts per revolution, in combination with a frequency counter that rejects common-mode noise.

(2) *Torque*. You may use a variety of methods to determine engine torque. As needed, and based on good engineering judgment, compensate for torque induced by the inertia of accelerating and decelerating components connected to the flywheel, such as the drive shaft and dynamometer rotor. Use any of the following methods to determine engine torque:

(i) Measure torque by mounting a strain gage or similar instrument inline between the engine and dynamometer.

(ii) Measure torque by mounting a strain gage or similar instrument on a lever arm connected to the dynamometer housing.

(iii) Calculate torque from internal dynamometer signals, such as armature current, as long as you calibrate this measurement as described in § 1065.310.

(c) *Electrical work*. Use a watt-hour meter output to calculate total work according to § 1065.650. Use a watt-hour meter that outputs active power. Watt-hour meters typically combine a Wheatstone bridge voltmeter and a Hall-effect clamp-on ammeter into a single microprocessor-based instrument that analyzes and outputs several parameters, such as alternating or direct current voltage, current, power factor, apparent power, reactive power, and active power.

(d) *Pump, compressor or turbine work*. Use pressure transducer and flow-meter outputs to calculate total work according to § 1065.650. For flow meters, see §§ 1065.220 through 1065.248.

[70 FR 40516, July 13, 2005, as amended at 73 FR 37300, June 30, 2008; 79 FR 23760, Apr. 28, 2014]

§ 1065.215 Pressure transducers, temperature sensors, and dewpoint sensors.

(a) *Application*. Use instruments as specified in this section to measure pressure, temperature, and dewpoint.

(b) *Component requirements*. We recommend that you use pressure transducers, temperature sensors, and dewpoint sensors that meet the specifications in Table 1 of § 1065.205. Note that your overall systems for measuring pressure, temperature, and dewpoint must meet the calibration and verifications in § 1065.315.

(c) *Temperature*. For PM-balance environments or other precision temperature measurements over a narrow temperature range, we recommend thermistors. For other applications we recommend thermocouples that are not grounded to the thermocouple sheath. You may use other temperature sensors, such as resistive temperature detectors (RTDs).

(d) *Pressure*. Pressure transducers must be located in a temperature-controlled environment, or they must compensate for temperature changes over their expected operating range. Transducer materials must be compatible with the fluid being measured. For atmospheric pressure or other precision pressure measurements, we recommend either capacitance-type, quartz crystal, or laser-interferometer transducers. For other applications, we recommend either strain gage or capacitance-type pressure transducers. You may use other pressure-measurement instruments, such as manometers, where appropriate.

(e) *Dewpoint*. For PM-stabilization environments, we recommend chilled-surface hygrometers, which include chilled mirror detectors and chilled surface acoustic wave (SAW) detectors. For other applications, we recommend thin-film capacitance sensors. You may use other dewpoint sensors, such as a wet-bulb/dry-bulb psychrometer, where appropriate.

[70 FR 40516, July 13, 2005, as amended at 73 FR 37300, June 30, 2008]

FLOW-RELATED MEASUREMENTS

§ 1065.220 Fuel flow meter.

(a) *Application*. You may use fuel flow in combination with a chemical balance of fuel, inlet air, and raw exhaust to calculate raw exhaust flow as described in § 1065.655(f), as follows:

(1) Use the actual value of calculated raw exhaust flow rate in the following cases:

(i) For multiplying raw exhaust flow rate with continuously sampled concentrations.

(ii) For multiplying total raw exhaust flow with batch-sampled concentrations.

(iii) For calculating the dilution air flow for background correction as described in § 1065.667.

(2) In the following cases, you may use a fuel flow meter signal that does not give the actual value of raw exhaust, as long as it is linearly proportional to the exhaust molar flow rate's actual calculated value:

(i) For feedback control of a proportional sampling system, such as a partial-flow dilution system.

(ii) For multiplying with continuously sampled gas concentrations, if the same signal is used in a chemical-balance calculation to determine work from brake-specific fuel consumption and fuel consumed.

(b) *Component requirements*. We recommend that you use a fuel flow meter that meets the specifications in Table 1 of § 1065.205. We recommend a fuel flow meter that measures mass directly, such as one that relies on gravimetric or inertial measurement principles. This may involve using a meter with one or more scales for weighing fuel or using a Coriolis meter. Note that your overall system for measuring fuel flow must meet the linearity verification in § 1065.307 and the calibration and verifications in § 1065.320.

(c) *Recirculating fuel*. In any fuel-flow measurement, account for any fuel that bypasses the engine or returns from the engine to the fuel storage tank.

(d) *Flow conditioning*. For any type of fuel flow meter, condition the flow as needed to prevent wakes, eddies, circulating flows, or flow pulsations from affecting the accuracy or repeatability of the meter. You may accomplish this by using a sufficient length of straight tubing (such as a length equal to at least 10 pipe diameters) or by using specially designed tubing bends, straightening fins, or pneumatic pulsation dampeners to establish a steady and predictable velocity profile upstream of the meter. Condition the flow as needed to prevent any gas bubbles in the fuel from affecting the fuel meter.

[70 FR 40516, July 13, 2005, as amended at 73 FR 37300, June 30, 2008; 76 FR 57441, Sept. 15, 2011; 81 FR 74162, Oct. 25, 2016]

EFFECTIVE DATE NOTE: At 86 FR 34536, June 29, 2021, § 1065.220 was amended, effective July 29, 2021.

§ 1065.225 Intake-air flow meter.

(a) *Application*. You may use an intake-air flow meter in combination with a chemical balance of fuel, inlet air, and exhaust to calculate raw exhaust flow as described in § 1065.655(f) and (g), as follows:

(1) Use the actual value of calculated raw exhaust in the following cases:

(i) For multiplying raw exhaust flow rate with continuously sampled concentrations.

(ii) For multiplying total raw exhaust flow with batch-sampled concentrations.

(iii) For verifying minimum dilution ratio for PM batch sampling as described in § 1065.546.

(iv) For calculating the dilution air flow for background correction as described in § 1065.667.

(2) In the following cases, you may use an intake-air flow meter signal that does not give the actual value of raw exhaust, as long as it is linearly proportional to the exhaust flow rate's actual calculated value:

(i) For feedback control of a proportional sampling system, such as a partial-flow dilution system.

(ii) For multiplying with continuously sampled gas concentrations, if the same signal is used in a chemical-balance calculation to determine work from brake-specific fuel consumption and fuel consumed.

(b) *Component requirements*. We recommend that you use an intake-air flow meter that meets the specifications in Table 1 of § 1065.205. This may

include a laminar flow element, an ultrasonic flow meter, a subsonic venturi, a thermal-mass meter, an averaging Pitot tube, or a hot-wire anemometer. Note that your overall system for measuring intake-air flow must meet the linearity verification in § 1065.307 and the calibration in § 1065.325.

(c) *Flow conditioning*. For any type of intake-air flow meter, condition the flow as needed to prevent wakes, eddies, circulating flows, or flow pulsations from affecting the accuracy or repeatability of the meter. You may accomplish this by using a sufficient length of straight tubing (such as a length equal to at least 10 pipe diameters) or by using specially designed tubing bends, orifice plates or straightening fins to establish a predictable velocity profile upstream of the meter.

[70 FR 40516, July 13, 2005, as amended at 76 FR 57442, Sept. 15, 2011;79 FR 23760, Apr. 28, 2014; 81 FR 74163, Oct. 25, 2016]

EFFECTIVE DATE NOTE: At 86 FR 34536, June 29, 2021, § 1065.225 was amended, effective July 29, 2021.

§ 1065.230 Raw exhaust flow meter.

(a) *Application*. You may use measured raw exhaust flow, as follows:

(1) Use the actual value of calculated raw exhaust in the following cases:

(i) Multiply raw exhaust flow rate with continuously sampled concentrations.

(ii) Multiply total raw exhaust with batch sampled concentrations.

(2) In the following cases, you may use a raw exhaust flow meter signal that does not give the actual value of raw exhaust, as long as it is linearly proportional to the exhaust flow rate's actual calculated value:

(i) For feedback control of a proportional sampling system, such as a partial-flow dilution system.

(ii) For multiplying with continuously sampled gas concentrations, if the same signal is used in a chemical-balance calculation to determine work from brake-specific fuel consumption and fuel consumed.

(b) *Component requirements*. We recommend that you use a raw-exhaust flow meter that meets the specifications in Table 1 of § 1065.205. This may involve using an ultrasonic flow meter, a subsonic venturi, an averaging Pitot tube, a hot-wire anemometer, or other measurement principle. This would generally not involve a laminar flow element or a thermal-mass meter. Note that your overall system for measuring raw exhaust flow must meet the linearity verification in § 1065.307 and the calibration and verifications in § 1065.330. Any raw-exhaust meter must be designed to appropriately compensate for changes in the raw exhaust's thermodynamic, fluid, and compositional states.

(c) *Flow conditioning*. For any type of raw exhaust flow meter, condition the flow as needed to prevent wakes, eddies, circulating flows, or flow pulsations from affecting the accuracy or repeatability of the meter. You may accomplish this by using a sufficient length of straight tubing (such as a length equal to at least 10 pipe diameters) or by using specially designed tubing bends, orifice plates or straightening fins to establish a predictable velocity profile upstream of the meter.

(d) *Exhaust cooling*. You may cool raw exhaust upstream of a raw-exhaust flow meter, as long as you observe all the following provisions:

(1) Do not sample PM downstream of the cooling.

(2) If cooling causes exhaust temperatures above 202 °C to decrease to below 180 °C, do not sample NMHC downstream of the cooling for compression-ignition engines, two-stroke spark-ignition engines, or four-stroke spark-ignition engines at or below 19 kW.

(3) The cooling must not cause aqueous condensation.

[70 FR 40516, July 13, 2005, as amended at 79 FR 23761, Apr. 28, 2014]

§ 1065.240 Dilution air and diluted exhaust flow meters.

(a) *Application*. Use a diluted exhaust flow meter to determine instantaneous diluted exhaust flow rates or total diluted exhaust flow over a test interval. You may use the difference between a diluted exhaust flow meter and a dilution air meter to calculate raw exhaust flow rates or total raw exhaust flow over a test interval.

(b) *Component requirements*. We recommend that you use a diluted exhaust

flow meter that meets the specifications in Table 1 of § 1065.205. Note that your overall system for measuring diluted exhaust flow must meet the linearity verification in § 1065.307 and the calibration and verifications in § 1065.340 and § 1065.341. You may use the following meters:

(1) For constant-volume sampling (CVS) of the total flow of diluted exhaust, you may use a critical-flow venturi (CFV) or multiple critical-flow venturis arranged in parallel, a positive-displacement pump (PDP), a subsonic venturi (SSV), or an ultrasonic flow meter (UFM). Combined with an upstream heat exchanger, either a CFV or a PDP will also function as a passive flow controller in a CVS system. However, you may also combine any flow meter with any active flow control system to maintain proportional sampling of exhaust constituents. You may control the total flow of diluted exhaust, or one or more sample flows, or a combination of these flow controls to maintain proportional sampling.

(2) For any other dilution system, you may use a laminar flow element, an ultrasonic flow meter, a subsonic venturi, a critical-flow venturi or multiple critical-flow venturis arranged in parallel, a positive-displacement meter, a thermal-mass meter, an averaging Pitot tube, or a hot-wire anemometer.

(c) *Flow conditioning*. For any type of diluted exhaust flow meter, condition the flow as needed to prevent wakes, eddies, circulating flows, or flow pulsations from affecting the accuracy or repeatability of the meter. For some meters, you may accomplish this by using a sufficient length of straight tubing (such as a length equal to at least 10 pipe diameters) or by using specially designed tubing bends, orifice plates or straightening fins to establish a predictable velocity profile upstream of the meter.

(d) *Exhaust cooling*. You may cool diluted exhaust upstream of a dilute-exhaust flow meter, as long as you observe all the following provisions:

(1) Do not sample PM downstream of the cooling.

(2) If cooling causes exhaust temperatures above 202 °C to decrease to below 180 °C, do not sample NMHC downstream of the cooling for compression-ignition engines, two-stroke spark-ignition engines, or four-stroke spark-ignition engines at or below 19 kW.

(3) The cooling must not cause aqueous condensation as described in § 1065.140(c)(6).

[70 FR 40516, July 13, 2005, as amended at 75 FR 23035, Apr. 30, 2010; 79 FR 23761, Apr. 28, 2014]

§ 1065.245 Sample flow meter for batch sampling.

(a) *Application*. Use a sample flow meter to determine sample flow rates or total flow sampled into a batch sampling system over a test interval. You may use the difference between a diluted exhaust sample flow meter and a dilution air meter to calculate raw exhaust flow rates or total raw exhaust flow over a test interval.

(b) *Component requirements*. We recommend that you use a sample flow meter that meets the specifications in Table 1 of § 1065.205. This may involve a laminar flow element, an ultrasonic flow meter, a subsonic venturi, a critical-flow venturi or multiple critical-flow venturis arranged in parallel, a positive-displacement meter, a thermal-mass meter, an averaging Pitot tube, or a hot-wire anemometer. Note that your overall system for measuring sample flow must meet the linearity verification in § 1065.307. For the special case where CFVs are used for both the diluted exhaust and sample-flow measurements and their upstream pressures and temperatures remain similar during testing, you do not have to quantify the flow rate of the sample-flow CFV. In this special case, the sample-flow CFV inherently flow-weights the batch sample relative to the diluted exhaust CFV.

(c) *Flow conditioning*. For any type of sample flow meter, condition the flow as needed to prevent wakes, eddies, circulating flows, or flow pulsations from affecting the accuracy or repeatability of the meter. For some meters, you may accomplish this by using a sufficient length of straight tubing (such as a length equal to at least 10 pipe diameters) or by using specially designed tubing bends, orifice plates or straightening fins to establish a predictable velocity profile upstream of the meter.

§ 1065.247 Diesel exhaust fluid flow rate.

(a) *Application*. Determine diesel exhaust fluid flow rate over a test interval for batch or continuous emission sampling using one of the three methods described in this section.

(b) *ECM*. Use the ECM signal directly to determine diesel exhaust fluid flow rate. You may combine this with a gravimetric scale if that improves measurement quality. Prior to testing, you may characterize the ECM signal using a laboratory measurement and adjust the ECM signal, consistent with good engineering judgment.

(c) *Flow meter*. Measure diesel exhaust fluid flow rate with a flow meter. We recommend that the flow meter that meets the specifications in Table 1 of § 1065.205. Note that your overall system for measuring diesel exhaust fluid flow must meet the linearity verification in § 1065.307. Measure using the following procedure:

(1) Condition the flow of diesel exhaust fluid as needed to prevent wakes, eddies, circulating flows, or flow pulsations from affecting the accuracy or repeatability of the meter. You may accomplish this by using a sufficient length of straight tubing (such as a length equal to at least 10 pipe diameters) or by using specially designed tubing bends, straightening fins, or pneumatic pulsation dampeners to establish a steady and predictable velocity profile upstream of the meter. Condition the flow as needed to prevent any gas bubbles in the fluid from affecting the flow meter.

(2) Account for any fluid that bypasses the engine or returns from the engine to the fluid storage tank.

(d) *Gravimetric scale*. Use a gravimetric scale to determine the mass of diesel exhaust fluid the engine uses over a discrete-mode test interval and divide by the time of the test interval.

[81 FR 74163, Oct. 25, 2016]

EFFECTIVE DATE NOTE: At 86 FR 34536, June 29, 2021, § 1065.247 was revised, effective July 29, 2021.

§ 1065.248 Gas divider.

(a) *Application*. You may use a gas divider to blend calibration gases.

(b) *Component requirements*. Use a gas divider that blends gases to the specifications of § 1065.750 and to the flow-weighted concentrations expected during testing. You may use critical-flow gas dividers, capillary-tube gas dividers, or thermal-mass-meter gas dividers. Note that your overall gas-divider system must meet the linearity verification in § 1065.307.

CO AND CO_2 MEASUREMENTS

§ 1065.250 Nondispersive infrared analyzer.

(a) *Application*. Use a nondispersive infrared (NDIR) analyzer to measure CO and CO_2 concentrations in raw or diluted exhaust for either batch or continuous sampling.

(b) *Component requirements*. We recommend that you use an NDIR analyzer that meets the specifications in Table 1 of § 1065.205. Note that your NDIR-based system must meet the calibration and verifications in §§ 1065.350 and 1065.355 and it must also meet the linearity verification in § 1065.307.

[76 FR 57442, Sept. 15, 2011, as amended at 79 FR 23761, Apr. 28, 2014]

HYDROCARBON MEASUREMENTS

§ 1065.260 Flame-ionization detector.

(a) *Application*. Use a flame-ionization detector (FID) analyzer to measure hydrocarbon concentrations in raw or diluted exhaust for either batch or continuous sampling. Determine hydrocarbon concentrations on a carbon number basis of one, C_1. For measuring THC or THCE you must use a FID analyzer. For measuring CH_4 you must meet the requirements of paragraph (f) of this section. See subpart I of this part for special provisions that apply to measuring hydrocarbons when testing with oxygenated fuels.

(b) *Component requirements*. We recommend that you use a FID analyzer that meets the specifications in Table 1 of § 1065.205. Note that your FID-based system for measuring THC, THCE, or CH_4 must meet all the verifications for hydrocarbon measurement in subpart D of this part, and it must also meet the linearity verification in § 1065.307.

(c) *Heated FID analyzers*. For measuring THC or THCE from compression-ignition engines, two-stroke spark-ignition engines, and four-stroke spark-ignition engines at or below 19 kW, you must use heated FID analyzers that maintain all surfaces that are exposed to emissions at a temperature of (191 ±11) °C.

(d) *FID fuel and burner air*. Use FID fuel and burner air that meet the specifications of § 1065.750. Do not allow the FID fuel and burner air to mix before entering the FID analyzer to ensure that the FID analyzer operates with a diffusion flame and not a premixed flame.

(e) *NMHC and NMOG*. For demonstrating compliance with NMHC standards, you may either measure THC or determine NMHC mass as described in § 1065.660(b)(1), or you may measure THC and CH_4 and determine NMHC as described in § 1065.660(b)(2) or (3). For gaseous-fueled engines, you may also use the additive method in § 1065.660(b)(4). See 40 CFR 1066.635 for methods to demonstrate compliance with NMOG standards for vehicle testing.

(f) *NMNEHC*. For demonstrating compliance with NMNEHC standards, you may either measure NMHC or determine NMNEHC mass as described in § 1065.660(c)(1), you may measure THC, CH_4, and C_2H_6 and determine NMNEHC as described in § 1065.660(c)(2), or you may use the additive method in § 1065.660(c)(3).

(g) *CH_4*. For reporting CH_4 or for demonstrating compliance with CH_4 standards, you may use a FID analyzer with a nonmethane cutter as described in § 1065.265 or you may use a GC–FID as described in § 1065.267. Determine CH_4 as described in § 1065.660(d).

[76 FR 57442, Sept. 15, 2011, as amended at 79 FR 23761, Apr. 28, 2014; 81 FR 74163, Oct. 25, 2016]

EFFECTIVE DATE NOTE: At 86 FR 34536, June 29, 2021, § 1065.260 was amended, effective July 29, 2021.

§ 1065.265 Nonmethane cutter.

(a) *Application*. You may use a nonmethane cutter to measure CH_4 with a FID analyzer. A nonmethane cutter oxidizes all nonmethane hydrocarbons to CO_2 and H_2O. You may use a nonmethane cutter for raw or diluted exhaust for batch or continuous sampling.

(b) *System performance*. Determine nonmethane-cutter performance as described in § 1065.365 and use the results to calculate CH_4 or NMHC emissions in § 1065.660.

(c) *Configuration*. Configure the nonmethane cutter with a bypass line if it is needed for the verification described in § 1065.365.

(d) *Optimization*. You may optimize a nonmethane cutter to maximize the penetration of CH_4 and the oxidation of all other hydrocarbons. You may humidify a sample and you may dilute a sample with purified air or oxygen (O_2) upstream of the nonmethane cutter to optimize its performance. You must account for any sample humidification and dilution in emission calculations.

[70 FR 40516, July 13, 2005, as amended at 73 FR 37300, June 30, 2008; 76 FR 57442, Sept. 15, 2011]

§ 1065.266 Fourier transform infrared analyzer.

(a) *Application*. For engines that run only on natural gas, you may use a Fourier transform infrared (FTIR) analyzer to measure nonmethane hydrocarbon (NMHC) and nonmethane-nonethane hydrocarbon (NMNEHC) for continuous sampling. You may use an FTIR analyzer with any gaseous-fueled engine, including dual-fuel engines, to measure CH_4 and C_2H_6, for either batch or continuous sampling (for subtraction from THC).

(b) *Component requirements*. We recommend that you use an FTIR analyzer that meets the specifications in Table 1 of § 1065.205. Note that your FTIR-based system must meet the linearity verification in § 1065.307. Use appropriate analytical procedures for interpretation of infrared spectra. For example, EPA Test Method 320 (see *https://www3.epa.gov/ttn/emc/promgate/m-320.pdf*) and ASTM D6348 (incorporated by reference in § 1065.1010) are considered valid methods for spectral interpretation. You must use heated FTIR analyzers that maintain all surfaces that are exposed to emissions at a temperature of (110 to 202) °C.

(c) *Hydrocarbon species for NMHC and NMNEHC additive determination.* To determine NMNEHC, measure ethene, ethyne, propane, propene, butane, formaldehyde, acetaldehyde, formic acid, and methanol. To determine NMHC, measure ethane in addition to those same hydrocarbon species. Determine NMHC and NMNEHC as described in § 1065.660(b)(4) and § 1065.660(c)(3).

(d) *NMHC and NMNEHC* CH_4 and C_2H_6 determination from subtraction of CH_4 and C_2H_6 from THC. Determine CH_4 as described in § 1065.660(d)(2) and C_2H_6 as described § 1065.660(e). Determine NMHC from subtraction of CH_4 from THC as described in § 1065.660(b)(3) and NMNEHC from subtraction of CH_4 and C_2H_6 as described § 1065.660(c)(2). Determine CH_4 as described in § 1065.660(d)(2) and C_2H_6 as described § 1065.660(e).

(e) *Interference verification.* Perform interference verification for FTIR analyzers using the procedures of § 1065.366. Certain interference gases can interfere with FTIR analyzers by causing a response similar to the hydrocarbon species of interest. When running the interference verification for these analyzers, use interference gases as follows:

(1) The interference gases for CH_4 are CO_2, H_2O, and C_2H_6.

(2) The interference gases for C_2H_6 are CO_2, H_2O, and CH_4.

(3) The interference gases for other measured hydrocarbon species are CO_2, H_2O, CH_4, and C_2H_6.

[81 FR 74163, Oct. 25, 2016]

EFFECTIVE DATE NOTE: At 86 FR 34536, June 29, 2021, § 1065.266 was amended, effective July 29, 2021.

§ 1065.267 Gas chromatograph with a flame ionization detector.

(a) *Application.* You may use a gas chromatograph with a flame ionization detector (GC–FID) to measure CH_4 and C_2H_6 concentrations of diluted exhaust for batch sampling. While you may also use a nonmethane cutter to measure CH_4, as described in § 1065.265, use a reference procedure based on a gas chromatograph for comparison with any proposed alternate measurement procedure under § 1065.10.

(b) *Component requirements.* We recommend that you use a GC–FID that meets the specifications in Table 1 of § 1065.205 and that the measurement be done according to SAE J1151 (incorporated by reference in § 1065.1010). The GC–FID must meet the linearity verification in § 1065.307.

[76 FR 57442, Sept. 15, 2011, as amended at 79 FR 23761, Apr. 28, 2014; 81 FR 74163, Oct. 25, 2016]

§ 1065.269 Photoacoustic analyzer for ethanol and methanol.

(a) *Application.* You may use a photoacoustic analyzer to measure ethanol and/or methanol concentrations in diluted exhaust for batch sampling.

(b) *Component requirements.* We recommend that you use a photoacoustic analyzer that meets the specifications in Table 1 of § 1065.205. Note that your photoacoustic system must meet the verification in § 1065.369 and it must also meet the linearity verification in § 1065.307. Use an optical wheel configuration that gives analytical priority to measurement of the least stable components in the sample. Select a sample integration time of at least 5 seconds. Take into account sample chamber and sample line volumes when determining flush times for your instrument.

[79 FR 23761, Apr. 28, 2014]

NO_X AND N_2O MEASUREMENTS

§ 1065.270 Chemiluminescent detector.

(a) *Application.* You may use a chemiluminescent detector (CLD) to measure NO_X concentration in raw or diluted exhaust for batch or continuous sampling. We generally accept a CLD for NO_X measurement, even though it measures only NO and NO_2, when coupled with an NO_2-to-NO converter, since conventional engines and aftertreatment systems do not emit significant amounts of NO_X species other than NO and NO_2. Measure other NO_X species if required by the standard-setting part. While you may also use other instruments to measure NO_X, as described in § 1065.272, use a reference procedure based on a chemiluminescent detector for comparison with any proposed alternate measurement procedure under § 1065.10.

(b) *Component requirements.* We recommend that you use a CLD that meets the specifications in Table 1 of § 1065.205. Note that your CLD-based

system must meet the quench verification in § 1065.370 and it must also meet the linearity verification in § 1065.307. You may use a heated or unheated CLD, and you may use a CLD that operates at atmospheric pressure or under a vacuum.

(c) *NO_2-to-NO converter*. Place upstream of the CLD an internal or external NO_2-to-NO converter that meets the verification in § 1065.378. Configure the converter with a bypass line if it is needed to facilitate this verification.

(d) *Humidity effects*. You must maintain all CLD temperatures to prevent aqueous condensation. If you remove humidity from a sample upstream of a CLD, use one of the following configurations:

(1) Connect a CLD downstream of any dryer or chiller that is downstream of an NO_2-to-NO converter that meets the verification in § 1065.378.

(2) Connect a CLD downstream of any dryer or thermal chiller that meets the verification in § 1065.376.

(e) *Response time*. You may use a heated CLD to improve CLD response time.

[70 FR 40516, July 13, 2005, as amended at 73 FR 37300, June 30, 2008; 76 FR 57442, Sept. 15, 2011; 79 FR 23761, Apr. 28, 2014]

§ 1065.272 Nondispersive ultraviolet analyzer.

(a) *Application*. You may use a nondispersive ultraviolet (NDUV) analyzer to measure NO_X concentration in raw or diluted exhaust for batch or continuous sampling. We generally accept an NDUV for NO_X measurement, even though it measures only NO and NO_2, since conventional engines and aftertreatment systems do not emit significant amounts of other NO_X species. Measure other NO_X species if required by the standard-setting part. Note that good engineering judgment may preclude you from using an NDUV analyzer if sampled exhaust from test engines contains oil (or other contaminants) in sufficiently high concentrations to interfere with proper operation.

(b) *Component requirements*. We recommend that you use an NDUV analyzer that meets the specifications in Table 1 of § 1065.205. Note that your NDUV-based system must meet the verifications in § 1065.372 and it must also meet the linearity verification in § 1065.307.

(c) *NO_2-to-NO converter*. If your NDUV analyzer measures only NO, place upstream of the NDUV analyzer an internal or external NO_2-to-NO converter that meets the verification in § 1065.378. Configure the converter with a bypass to facilitate this verification.

(d) *Humidity effects*. You must maintain NDUV temperature to prevent aqueous condensation, unless you use one of the following configurations:

(1) Connect an NDUV downstream of any dryer or chiller that is downstream of an NO_2-to-NO converter that meets the verification in § 1065.378.

(2) Connect an NDUV downstream of any dryer or thermal chiller that meets the verification in § 1065.376.

[70 FR 40516, July 13, 2005, as amended at 73 FR 59323, Oct. 8, 2008; 76 FR 57442, Sept. 15, 2011; 79 FR 23761, Apr. 28, 2014]

§ 1065.275 N_2O measurement devices.

(a) *General component requirements*. We recommend that you use an analyzer that meets the specifications in Table 1 of § 1065.205. Note that your system must meet the linearity verification in § 1065.307.

(b) *Instrument types*. You may use any of the following analyzers to measure N_2O:

(1) Nondispersive infrared (NDIR) analyzer.

(2) Fourier transform infrared (FTIR) analyzer. Use appropriate analytical procedures for interpretation of infrared spectra. For example, EPA Test Method 320 (see *https://www3.epa.gov/ttn/emc/promgate/m-320.pdf*) and ASTM D6348 (incorporated by reference in § 1065.1010) are considered valid methods for spectral interpretation.

(3) Laser infrared analyzer. Examples of laser infrared analyzers are pulsed-mode high-resolution narrow band mid-infrared analyzers, and modulated continuous wave high-resolution narrow band mid-infrared analyzers.

(4) Photoacoustic analyzer. Use an optical wheel configuration that gives analytical priority to measurement of the least stable components in the sample. Select a sample integration time of at least 5 seconds. Take into account sample chamber and sample

line volumes when determining flush times for your instrument.

(5) Gas chromatograph analyzer. You may use a gas chromatograph with an electron-capture detector (GC–ECD) to measure N_2O concentrations of diluted exhaust for batch sampling.

(i) You may use a packed or porous layer open tubular (PLOT) column phase of suitable polarity and length to achieve adequate resolution of the N_2O peak for analysis. Examples of acceptable columns are a PLOT column consisting of bonded polystyrene-divinylbenzene or a Porapack Q packed column. Take the column temperature profile and carrier gas selection into consideration when setting up your method to achieve adequate N_2O peak resolution.

(ii) Use good engineering judgment to zero your instrument and correct for drift. You do not need to follow the specific procedures in §§1065.530 and 1065.550(b) that would otherwise apply. For example, you may perform a span gas measurement before and after sample analysis without zeroing and use the average area counts of the pre-span and post-span measurements to generate a response factor (area counts/span gas concentration), which you then multiply by the area counts from your sample to generate the sample concentration.

(c) *Interference verification.* Perform interference verification for NDIR, FTIR, laser infrared analyzers, and photoacoustic analyzers using the procedures of §1065.375. Interference verification is not required for GC–ECD. Certain interference gases can positively interfere with NDIR, FTIR, and photoacoustic analyzers by causing a response similar to N_2O. When running the interference verification for these analyzers, use interference gases as follows:

(1) The interference gases for NDIR analyzers are CO, CO_2, H_2O, CH_4, and SO_2. Note that interference species, with the exception of H_2O, are dependent on the N_2O infrared absorption band chosen by the instrument manufacturer. For each analyzer determine the N_2O infrared absorption band. For each N_2O infrared absorption band, use good engineering judgment to determine which interference gases to use in the verification.

(2) Use good engineering judgment to determine interference gases for FTIR, and laser infrared analyzers. Note that interference species, with the exception of H_2O, are dependent on the N_2O infrared absorption band chosen by the instrument manufacturer. For each analyzer determine the N_2O infrared absorption band. For each N_2O infrared absorption band, use good engineering judgment to determine interference gases to use in the verification.

(3) The interference gases for photoacoustic analyzers are CO, CO_2, and H_2O.

[74 FR 56512, Oct. 30, 2009, as amended at 76 FR 57443, Sept. 15, 2011; 78 FR 36398, June 17, 2013;79 FR 23761, Apr. 28, 2014; 81 FR 74163, Oct. 25, 2016]

EFFECTIVE DATE NOTE: At 86 FR 34536, June 29, 2021, §1065.275 was amended, effective July 29, 2021.

O_2 MEASUREMENTS

§1065.280 Paramagnetic and magnetopneumatic O_2 detection analyzers.

(a) *Application.* You may use a paramagnetic detection (PMD) or magnetopneumatic detection (MPD) analyzer to measure O_2 concentration in raw or diluted exhaust for batch or continuous sampling. You may use O_2 measurements with intake air or fuel flow measurements to calculate exhaust flow rate according to §1065.650.

(b) *Component requirements.* We recommend that you use a PMD or MPD analyzer that meets the specifications in Table 1 of §1065.205. Note that it must meet the linearity verification in §1065.307.

[73 FR 37300, June 30, 2008, as amended at 76 FR 57443, Sept. 15, 2011;79 FR 23762, Apr. 28, 2014]

EFFECTIVE DATE NOTE: At 86 FR 34536, June 29, 2021, §1065.280 was amended, effective July 29, 2021.

AIR-TO-FUEL RATIO MEASUREMENTS

§1065.284 Zirconia (ZrO_2) analyzer.

(a) *Application.* You may use a zirconia (ZrO_2) analyzer to measure air-to-fuel ratio in raw exhaust for continuous sampling. You may use O_2

measurements with intake air or fuel flow measurements to calculate exhaust flow rate according to § 1065.650.

(b) *Component requirements.* We recommend that you use a ZrO_2 analyzer that meets the specifications in Table 1 of § 1065.205. Note that your ZrO_2-based system must meet the linearity verification in § 1065.307.

[70 FR 40516, July 13, 2005, as amended at 76 FR 57443, Sept. 15, 2011; 79 FR 23762, Apr. 28, 2014]

PM MEASUREMENTS

§ 1065.290 PM gravimetric balance.

(a) *Application.* Use a balance to weigh net PM on a sample medium for laboratory testing.

(b) *Component requirements.* We recommend that you use a balance that meets the specifications in Table 1 of § 1065.205. Note that your balance-based system must meet the linearity verification in § 1065.307. If the balance uses internal calibration weights for routine spanning and the weights do not meet the specifications in § 1065.790, the weights must be verified independently with external calibration weights meeting the requirements of § 1065.790. While you may also use an inertial balance to measure PM, as described in § 1065.295, use a reference procedure based on a gravimetric balance for comparison with any proposed alternate measurement procedure under § 1065.10.

(c) *Pan design.* We recommend that you use a balance pan designed to minimize corner loading of the balance, as follows:

(1) Use a pan that centers the PM sample media (such as a filter) on the weighing pan. For example, use a pan in the shape of a cross that has upswept tips that center the PM sample media on the pan.

(2) Use a pan that positions the PM sample as low as possible.

(d) *Balance configuration.* Configure the balance for optimum settling time and stability at your location.

[73 FR 37300, June 30, 2008, as amended at 75 FR 68462, Nov. 8, 2010]

§ 1065.295 PM inertial balance for field-testing analysis.

(a) *Application.* You may use an inertial balance to quantify net PM on a sample medium for field testing.

(b) *Component requirements.* We recommend that you use a balance that meets the specifications in Table 1 of § 1065.205. Note that your balance-based system must meet the linearity verification in § 1065.307. If the balance uses an internal calibration process for routine spanning and linearity verifications, the process must be NIST-traceable.

(c) *Loss correction.* You may use PM loss corrections to account for PM loss in the inertial balance, including the sample handling system.

(d) *Deposition.* You may use electrostatic deposition to collect PM as long as its collection efficiency is at least 95%.

[73 FR 59259, Oct. 8, 2008, as amended at 75 FR 68462, Nov. 8, 2010; 76 FR 57443, Sept. 15, 2011; 79 FR 23762, Apr. 28, 2014]

Subpart D—Calibrations and Verifications

§ 1065.301 Overview and general provisions.

(a) This subpart describes required and recommended calibrations and verifications of measurement systems. See subpart C of this part for specifications that apply to individual instruments.

(b) You must generally use complete measurement systems when performing calibrations or verifications in this subpart. For example, this would generally involve evaluating instruments based on values recorded with the complete system you use for recording test data, including analog-to-digital converters. For some calibrations and verifications, we may specify that you disconnect part of the measurement system to introduce a simulated signal.

(c) If we do not specify a calibration or verification for a portion of a measurement system, calibrate that portion of your system and verify its performance at a frequency consistent with

any recommendations from the measurement-system manufacturer, consistent with good engineering judgment.

(d) Use NIST-traceable standards to the tolerances we specify for calibrations and verifications. Where we specify the need to use NIST-traceable standards, you may alternatively ask for our approval to use international standards that are not NIST-traceable.

§ 1065.303 Summary of required calibration and verifications.

The following table summarizes the required and recommended calibrations and verifications described in this subpart and indicates when these have to be performed:

TABLE 1 OF § 1065.303—SUMMARY OF REQUIRED CALIBRATION AND VERIFICATIONS

Type of calibration or verification	Minimum frequency [1]
§ 1065.305: Accuracy, repeatability and noise	Accuracy: Not required, but recommended for initial installation. Repeatability: Not required, but recommended for initial installation. Noise: Not required, but recommended for initial installation.
§ 1065.307: Linearity verification	Speed: Upon initial installation, within 370 days before testing and after major maintenance. Torque: Upon initial installation, within 370 days before testing and after major maintenance. Electrical power, current, and voltage: Upon initial installation, within 370 days before testing and after major maintenance.[2] Fuel flow rate: Upon initial installation, within 370 days before testing, and after major maintenance. DEF flow: Upon initial installation, within 370 days before testing, and after major maintenance. Intake-air, dilution air, diluted exhaust, and batch sampler flow rates: Upon initial installation, within 370 days before testing and after major maintenance, unless flow is verified by propane check or by carbon or oxygen balance. Raw exhaust flow rate: Upon initial installation, within 185 days before testing and after major maintenance, unless flow is verified by propane check or by carbon or oxygen balance. Gas dividers: Upon initial installation, within 370 days before testing, and after major maintenance. Gas analyzers (unless otherwise noted): Upon initial installation, within 35 days before testing and after major maintenance. FTIR and photoacoustic analyzers: Upon initial installation, within 370 days before testing and after major maintenance. GC–ECD: Upon initial installation and after major maintenance. PM balance: Upon initial installation, within 370 days before testing and after major maintenance. Pressure, temperature, and dewpoint: Upon initial installation, within 370 days before testing and after major maintenance.
§ 1065.308: Continuous gas analyzer system response and updating-recording verification—for gas analyzers not continuously compensated for other gas species.	Upon initial installation or after system modification that would affect response.
§ 1065.309: Continuous gas analyzer system-response and updating-recording verification—for gas analyzers continuously compensated for other gas species.	Upon initial installation or after system modification that would affect response.
§ 1065.310: Torque	Upon initial installation and after major maintenance.
§ 1065.315: Pressure, temperature, dewpoint	Upon initial installation and after major maintenance.
§ 1065.320: Fuel flow	Upon initial installation and after major maintenance.
§ 1065.325: Intake flow	Upon initial installation and after major maintenance.
§ 1065.330: Exhaust flow	Upon initial installation and after major maintenance.
§ 1065.340: Diluted exhaust flow (CVS)	Upon initial installation and after major maintenance.
§ 1065.341: CVS and batch sampler verification [3].	Upon initial installation, within 35 days before testing, and after major maintenance.
§ 1065.342 Sample dryer verification	For thermal chillers: Upon installation and after major maintenance. For osmotic membranes; Upon installation, within 35 days of testing, and after major maintenance.
§ 1065.345: Vacuum leak	For laboratory testing: Upon initial installation of the sampling system, within 8 hours before the start of the first test interval of each duty-cycle sequence, and after maintenance such as pre-filter changes. For field testing: After each installation of the sampling system on the vehicle, prior to the start of the field test, and after maintenance such as pre-filter changes.
§ 1065.350: CO_2 NDIR H_2O interference	Upon initial installation and after major maintenance.
§ 1065.355: CO NDIR CO_2 and H_2O interference.	Upon initial installation and after major maintenance.

TABLE 1 OF § 1065.303—SUMMARY OF REQUIRED CALIBRATION AND VERIFICATIONS—Continued

Type of calibration or verification	Minimum frequency [1]
§ 1065.360: FID calibration THC FID optimization, and THC FID verification.	Calibrate all FID analyzers: Upon initial installation and after major maintenance. Optimize and determine CH_4 response for THC FID analyzers: Upon initial installation and after major maintenance. Verify CH_4 response for THC FID analyzers: Upon initial installation, within 185 days before testing, and after major maintenance. Verify C_2H_6 response for THC FID analyzers if used for NMNEHC determination: Upon initial installation, within 185 days before testing, and after major maintenance.
§ 1065.362: Raw exhaust FID O_2 interference ..	For all FID analyzers: Upon initial installation, and after major maintenance. For THC FID analyzers: Upon initial installation, after major maintenance, and after FID optimization according to § 1065.360.
§ 1065.365: Nonmethane cutter penetration	Upon initial installation, within 185 days before testing, and after major maintenance.
§ 1065.366: Interference verification for FTIR analyzers.	Upon initial installation and after major maintenance.
§ 1065.369: H_2O, CO, and CO_2 interference verification for ethanol photoacoustic analyzers.	Upon initial installation and after major maintenance.
§ 1065.370: CLD CO_2 and H_2O quench	Upon initial installation and after major maintenance.
§ 1065.372: NDUV HC and H_2O interference ...	Upon initial installation and after major maintenance.
§ 1065.375: N_2O analyzer interference	Upon initial installation and after major maintenance.
§ 1065.376: Chiller NO_2 penetration	Upon initial installation and after major maintenance.
§ 1065.378: NO_2-to-NO converter conversion ...	Upon initial installation, within 35 days before testing, and after major maintenance.
§ 1065.390: PM balance and weighing	Independent verification: Upon initial installation, within 370 days before testing, and after major maintenance. Zero, span, and reference sample verifications: Within 12 hours of weighing, and after major maintenance.
§ 1065.395: Inertial PM balance and weighing ..	Independent verification: Upon initial installation, within 370 days before testing, and after major maintenance. Other verifications: Upon initial installation and after major maintenance.

[1] Perform calibrations and verifications more frequently than we specify, according to measurement system manufacturer instructions and good engineering judgment.
[2] Perform linearity verification either for electrical power or for current and voltage.
[3] The CVS verification described in § 1065.341 is not required for systems that agree within ±2% based on a chemical balance of carbon or oxygen of the intake air, fuel, and diluted exhaust.

[81 FR 74164, Oct. 25, 2016]

EFFECTIVE DATE NOTE: At 86 FR 34536, June 29, 2021, § 1065.303 was revised, effective July 29, 2021.

§ 1065.305 Verifications for accuracy, repeatability, and noise.

(a) This section describes how to determine the accuracy, repeatability, and noise of an instrument. Table 1 of § 1065.205 specifies recommended values for individual instruments.

(b) We do not require you to verify instrument accuracy, repeatability, or noise.

However, it may be useful to consider these verifications to define a specification for a new instrument, to verify the performance of a new instrument upon delivery, or to troubleshoot an existing instrument.

(c) In this section we use the letter ''y'' to denote a generic measured quantity, the superscript over-bar to denote an arithmetic mean (such as $\bar{y}$), and the subscript ''$_{ref}$'' to denote the reference quantity being measured.

(d) Conduct these verifications as follows:

(1) Prepare an instrument so it operates at its specified temperatures, pressures, and flows. Perform any instrument linearization or calibration procedures prescribed by the instrument manufacturer.

(2) Zero the instrument as you would before an emission test by introducing a zero signal. Depending on the instrument, this may be a zero-concentration gas, a reference signal, a set of reference thermodynamic conditions, or some combination of these. For gas analyzers, use a zero gas that meets the specifications of § 1065.750.

(3) Span the instrument as you would before an emission test by introducing a span signal. Depending on the instrument, this may be a span-concentration gas, a reference signal, a set of reference thermodynamic conditions, or

some combination of these. For gas analyzers, use a span gas that meets the specifications of § 1065.750.

(4) Use the instrument to quantify a NIST-traceable reference quantity, y_{ref}. For gas analyzers the reference gas must meet the specifications of § 1065.750. Select a reference quantity near the mean value expected during testing. For all gas analyzers, use a quantity near the flow-weighted mean concentration expected at the standard or expected during testing, whichever is greater. For noise verification, use the same zero gas from paragraph (d)(2) of this section as the reference quantity. In all cases, allow time for the instrument to stabilize while it measures the reference quantity. Stabilization time may include time to purge an instrument and time to account for its response.

(5) Sample and record values for 30 seconds (you may select a longer sampling period if the recording update frequency is less than 0.5 Hz), record the arithmetic mean, $\bar{y}_i$ and record the standard deviation, σ_i of the recorded values. Refer to § 1065.602 for an example of calculating arithmetic mean and standard deviation.

(6) Also, if the reference quantity is not absolutely constant, which might be the case with a reference flow, sample and record values of y_{refi} for 30 seconds and record the arithmetic mean of the values, $\bar{y}_{ref}$. Refer to § 1065.602 for an example of calculating arithmetic mean.

(7) Subtract the reference value, y_{ref} (or $\bar{y}_{refi}$), from the arithmetic mean, $\bar{y}_i$. Record this value as the error, ε_i.

(8) Repeat the steps specified in paragraphs (d)(2) through (7) of this section until you have ten arithmetic means ($\bar{y}_1$, $\bar{y}_2$, $\bar{y}_i$, ...$\bar{y}_{10}$), ten standard deviations, (σ_1, σ_2, σ_i,...σ_{10}), and ten errors (ε_1, ε_2, ε_i,...ε_{10}).

(9) Use the following values to quantify your measurements:

(i) *Accuracy*. Instrument accuracy is the absolute difference between the reference quantity, y_{ref} (or $\bar{y}_{ref}$), and the arithmetic mean of the ten $\bar{y}_i$, $\bar{y}$ values. Refer to the example of an accuracy calculation in § 1065.602. We recommend that instrument accuracy be within the specifications in Table 1 of § 1065.205.

(ii) *Repeatability*. Repeatability is two times the standard deviation of the ten errors (that is, repeatability = $2 \cdot \sigma\varepsilon$). Refer to the example of a standard-deviation calculation in § 1065.602. We recommend that instrument repeatability be within the specifications in Table 1 of § 1065.205.

(iii) *Noise*. Noise is two times the root-mean-square of the ten standard deviations (that is, noise = $2 \cdot rms_{\sigma}$) when the reference signal is a zero-quantity signal. Refer to the example of a root-mean-square calculation in § 1065.602. We recommend that instrument noise be within the specifications in Table 1 of § 1065.205.

(10) You may use a measurement instrument that does not meet the accuracy, repeatability, or noise specifications in Table 1 of § 1065.205, as long as you meet the following criteria:

(i) Your measurement systems meet all the other required calibration, verification, and validation specifications that apply as specified in the regulations.

(ii) The measurement deficiency does not adversely affect your ability to demonstrate compliance with the applicable standards.

[70 FR 40516, July 13, 2005, as amended at 73 FR 37301, June 30, 2008; 75 FR 23037, Apr. 30, 2010; 79 FR 23763, Apr. 28, 2014]

§ 1065.307 Linearity verification.

(a) *Scope and frequency*. Perform linearity verification on each measurement system listed in Table 1 of this section at least as frequently as indicated in Table 1 of § 1065.303, consistent with measurement system manufacturer's recommendations and good engineering judgment. The intent of linearity verification is to determine that a measurement system responds accurately and proportionally over the measurement range of interest. Linearity verification generally consists of introducing a series of at least 10 reference values to a measurement system. The measurement system quantifies each reference value. The measured values are then collectively compared to the reference values by using a least-squares linear regression and the linearity criteria specified in Table 1 of this section.

(b) *Performance requirements.* If a measurement system does not meet the applicable linearity criteria referenced in Table 1 of this section, correct the deficiency by re-calibrating, servicing, or replacing components as needed. Repeat the linearity verification after correcting the deficiency to ensure that the measurement system meets the linearity criteria. Before you may use a measurement system that does not meet linearity criteria, you must demonstrate to us that the deficiency does not adversely affect your ability to demonstrate compliance with the applicable standards.

(c) *Procedure.* Use the following linearity verification protocol, or use good engineering judgment to develop a different protocol that satisfies the intent of this section, as described in paragraph (a) of this section:

(1) In this paragraph (c), the letter ''y'' denotes a generic measured quantity, the superscript over-bar denotes an arithmetic mean (such as $\bar{y}$), and the subscript ''$_{ref}$'' denotes the known or reference quantity being measured.

(2) Use good engineering judgment to operate a measurement system at normal operating conditions. This may include any specified adjustment or periodic calibration of the measurement system.

(3) If applicable, zero the instrument as you would before an emission test by introducing a zero signal. Depending on the instrument, this may be a zero-concentration gas, a reference signal, a set of reference thermodynamic conditions, or some combination of these. For gas analyzers, use a zero gas that meets the specifications of §1065.750 and introduce it directly at the analyzer port.

(4) If applicable, span the instrument as you would before an emission test by introducing a span signal. Depending on the instrument, this may be a span-concentration gas, a reference signal, a set of reference thermodynamic conditions, or some combination of these. For gas analyzers, use a span gas that meets the specifications of §1065.750 and introduce it directly at the analyzer port.

(5) If applicable, after spanning the instrument, check zero with the same signal you used in paragraph (c)(3) of this section. Based on the zero reading, use good engineering judgment to determine whether or not to rezero and or re-span the instrument before continuing.

(6) For all measured quantities, use the instrument manufacturer's recommendations and good engineering judgment to select reference values, y_{refi}, that cover a range of values that you expect would prevent extrapolation beyond these values during emission testing. We recommend selecting a zero reference signal as one of the reference values for the linearity verification. For pressure, temperature, dewpoint, power, current, voltage, photoacoustic analyzers, and GC–ECD linearity verifications, we recommend at least three reference values. For all other linearity verifications select at least ten reference values.

(7) Use the instrument manufacturer's recommendations and good engineering judgment to select the order in which you will introduce the series of reference values. For example, you may select the reference values randomly to avoid correlation with previous measurements and to avoid hysteresis; you may select reference values in ascending or descending order to avoid long settling times of reference signals; or you may select values to ascend and then descend to incorporate the effects of any instrument hysteresis into the linearity verification.

(8) Generate reference quantities as described in paragraph (d) of this section. For gas analyzers, use gas concentrations known to be within the specifications of §1065.750 and introduce them directly at the analyzer port.

(9) Introduce a reference signal to the measurement instrument.

(10) Allow time for the instrument to stabilize while it measures the value at the reference condition. Stabilization time may include time to purge an instrument and time to account for its response.

(11) At a recording frequency of at least f Hz, specified in Table 1 of §1065.205, measure the value at the reference condition for 30 seconds (you may select a longer sampling period if

the recording update frequency is less than 0.5 Hz) and record the arithmetic mean of the recorded values, $\bar{y}_i$. Refer to §1065.602 for an example of calculating an arithmetic mean.

(12) Repeat the steps in paragraphs (c)(9) though (11) of this section until measurements are complete at each of the reference conditions.

(13) Use the arithmetic means, $\bar{y}_i$, and reference values, y_{refi}, to calculate least-squares linear regression parameters and statistical values to compare to the minimum performance criteria specified in Table 1 of this section. Use the calculations described in §1065.602. Using good engineering judgment, you may weight the results of individual data pairs (i.e. (y_{refi}, $\bar{y}_i$,)), in the linear regression calculations.

(d) *Reference signals*. This paragraph (d) describes recommended methods for generating reference values for the linearity-verification protocol in paragraph (c) of this section. Use reference values that simulate actual values, or introduce an actual value and measure it with a reference-measurement system. In the latter case, the reference value is the value reported by the reference-measurement system. Reference values and reference-measurement systems must be NIST-traceable. We recommend using calibration reference quantities that are NIST-traceable within 0.5% uncertainty, if not specified elsewhere in this part 1065. Use the following recommended methods to generate reference values or use good engineering judgment to select a different reference:

(1) *Speed*. Run the engine or dynamometer at a series of steady-state speeds and use a strobe, photo tachometer, or laser tachometer to record reference speeds.

(2) *Torque*. Use a series of calibration weights and a calibration lever arm to simulate engine torque. You may instead use the engine or dynamometer itself to generate a nominal torque that is measured by a reference load cell or proving ring in series with the torque-measurement system. In this case, use the reference load cell measurement as the reference value. Refer to §1065.310 for a torque-calibration procedure similar to the linearity verification in this section.

(3) *Electrical power, current, and voltage*. You must perform linearity verification for either electrical power meters, or for current and voltage meters. Perform linearity verifications using a reference meter and controlled sources of current and voltage. We recommend using a complete calibration system that is suitable for the electrical power distribution industry.

(4) *Fuel rate*. Operate the engine at a series of constant fuel-flow rates or recirculate fuel back to a tank through the fuel flow meter at different flow rates. Use a gravimetric reference measurement (such as a scale, balance, or mass comparator) at the inlet to the fuel-measurement system. Use a stopwatch or timer to measure the time intervals over which reference masses of fuel are introduced to the fuel measurement system. The reference fuel mass divided by the time interval is the reference fuel flow rate.

(5) *Flow rates—inlet air, dilution air, diluted exhaust, raw exhaust, or sample flow*. Use a reference flow meter with a blower or pump to simulate flow rates. Use a restrictor, diverter valve, a variable-speed blower or a variable-speed pump to control the range of flow rates. Use the reference meter's response as the reference values.

(i) *Reference flow meters*. Because the flow range requirements for these various flows are large, we allow a variety of reference meters. For example, for diluted exhaust flow for a full-flow dilution system, we recommend a reference subsonic venturi flow meter with a restrictor valve and a blower to simulate flow rates. For inlet air, dilution air, diluted exhaust for partial-flow dilution, raw exhaust, or sample flow, we allow reference meters such as critical flow orifices, critical flow venturis, laminar flow elements, master mass flow standards, or Roots meters. Make sure the reference meter is calibrated and its calibration is NIST-traceable. If you use the difference of two flow measurements to determine a net flow rate, you may use one of the measurements as a reference for the other.

(ii) *Reference flow values*. Because the reference flow is not absolutely constant, sample and record values of $\dot{n}_{\mathrm{refi}}$ for 30 seconds and use the arithmetic

mean of the values, $\dot{n}_{ref}$, as the reference value. Refer to § 1065.602 for an example of calculating arithmetic mean.

(6) *Gas division*. Use one of the two reference signals:

(i) At the outlet of the gas-division system, connect a gas analyzer that meets the linearity verification described in this section and has not been linearized with the gas divider being verified. For example, verify the linearity of an analyzer using a series of reference analytical gases directly from compressed gas cylinders that meet the specifications of § 1065.750. We recommend using a FID analyzer or a PMD or MPD O_2 analyzer because of their inherent linearity. Operate this analyzer consistent with how you would operate it during an emission test. Connect a span gas to the gas-divider inlet. Use the gas-division system to divide the span gas with purified air or nitrogen. Select gas divisions that you typically use. Use a selected gas division as the measured value. Use the analyzer response divided by the span gas concentration as the reference gas-division value. Because the instrument response is not absolutely constant, sample and record values of x_{ref} for 30 seconds and use the arithmetic mean of the values, $\bar{x}_{ref}$, as the reference value. Refer to § 1065.602 for an example of calculating arithmetic mean.

(ii) Using good engineering judgment and the gas divider manufacturer's recommendations, use one or more reference flow meters to measure the flow rates of the gas divider and verify the gas-division value.

(7) *Continuous constituent concentration*. For reference values, use a series of gas cylinders of known gas concentration or use a gas-division system that is known to be linear with a span gas. Gas cylinders, gas-division systems, and span gases that you use for reference values must meet the specifications of § 1065.750.

(8) *Temperature*. You may perform the linearity verification for temperature measurement systems with thermocouples, RTDs, and thermistors by removing the sensor from the system and using a simulator in its place. Use a NIST-traceable simulator that is independently calibrated and, as appropriate, cold-junction-compensated. The simulator uncertainty scaled to absolute temperature must be less than 0.5% of T_{max}. If you use this option, you must use sensors that the supplier states are accurate to better than 0.5% of T_{max} compared with their standard calibration curve.

(9) *Mass*. For linearity verification for gravimetric PM balances, use external calibration weights that meet the requirements in § 1065.790.

(e) *Measurement systems that require linearity verification*. Table 1 of this section indicates measurement systems that require linearity verification, subject to the following provisions:

(1) Perform linearity verification more frequently based on the instrument manufacturer's recommendation or good engineering judgment.

(2) The expression ''x_{min}'' refers to the reference value used during linearity verification that is closest to zero. This is the value used to calculate the first tolerance in Table 1 of this section using the intercept, a_0. Note that this value may be zero, positive, or negative depending on the reference values. For example, if the reference values chosen to validate a pressure transducer vary from −10 to −1 kPa, x_{min} is −1 kPa. If the reference values used to validate a temperature device vary from 290 to 390 K, x_{min} is 290 K.

(3) The expression ''max'' generally refers to the absolute value of the reference value used during linearity verification that is furthest from zero. This is the value used to scale the first and third tolerances in Table 1 of this section using a_0 and *SEE*. For example, if the reference values chosen to validate a pressure transducer vary from −10 to −1 kPa, then p_{max} is + 10 kPa. If the reference values used to validate a temperature device vary from 290 to 390 K, then T_{max} is 390 K. For gas dividers where ''max'' is expressed as, x_{max}/x_{span}; x_{max} is the maximum gas concentration used during the verification, x_{span} is the undivided, undiluted, span gas concentration, and the resulting ratio is the maximum divider point reference value used during the verification (typically 1). The following are special cases where ''max'' refers to a different value:

(i) For linearity verification with a PM balance, m_{max} refers to the typical mass of a PM filter.

(ii) For linearity verification of torque on the engine's primary output shaft, T_{max} refers to the manufacturer's specified engine torque peak value of the lowest torque engine to be tested.

(4) The specified ranges are inclusive. For example, a specified range of 0.98–1.02 for a_1 means $0.98 \leq a_1 \leq 1.02$.

(5) Linearity verification is optional for systems that pass the flow-rate verification for diluted exhaust as described in § 1065.341 (the propane check) or for systems that agree within ±2% based on a chemical balance of carbon or oxygen of the intake air, fuel, and exhaust.

(6) You must meet the a_1 criteria for these quantities only if the absolute value of the quantity is required, as opposed to a signal that is only linearly proportional to the actual value.

(7) Linearity verification is required for the following temperature measurements:

(i) The following temperature measurements always require linearity verification:

(A) Air intake.

(B) Aftertreatment bed(s), for engines tested with aftertreatment devices subject to cold-start testing.

(C) Dilution air for gaseous and PM sampling, including CVS, double-dilution, and partial-flow systems.

(D) PM sample.

(E) Chiller sample, for gaseous sampling systems that use thermal chillers to dry samples and use chiller temperature to calculate the dewpoint at the outlet of the chiller. For your testing, if you choose to use a high alarm temperature setpoint for the chiller temperature as a constant value in determining the amount of water removed from the emission sample, you may use good engineering judgment to verify the accuracy of the high alarm temperature setpoint instead of linearity verification on the chiller temperature. To verify that the alarm trip point value is no less than 2.0 °C below the reference value at the trip point, we recommend that you input a reference simulated temperature signal below the alarm trip point and increase this signal until the high alarm trips.

(ii) Linearity verification is required for the following temperature measurements if these temperature measurements are specified by the engine manufacturer:

(A) Fuel inlet.

(B) Air outlet to the test cell's charge air cooler air outlet, for engines tested with a laboratory heat exchanger that simulates an installed charge air cooler.

(C) Coolant inlet to the test cell's charge air cooler, for engines tested with a laboratory heat exchanger that simulates an installed charge air cooler.

(D) Oil in the sump/pan.

(E) Coolant before the thermostat, for liquid-cooled engines.

(8) Linearity verification is required for the following pressure measurements:

(i) The following pressure measurements always require linearity verification:

(A) Air intake restriction.

(B) Exhaust back pressure as required in § 1065.130(h).

(C) Barometer.

(D) CVS inlet gage pressure where the raw exhaust enters the tunnel.

(E) Sample dryer, for gaseous sampling systems that use either osmotic-membrane or thermal chillers to dry samples. For your testing, if you choose to use a low alarm pressure setpoint for the sample dryer pressure as a constant value in determining the amount of water removed from the emission sample, you may use good engineering judgment to verify the accuracy of the low alarm pressure setpoint instead of linearity verification on the sample dryer pressure. To verify that the trip point value is no more than 4.0 kPa above the reference value at the trip point, we recommend that you input a reference pressure signal above the alarm trip point and decrease this signal until the low alarm trips.

(ii) Linearity verification is required for the following pressure measurements if these pressure measurements are specified by the engine manufacturer:

(A) The test cell's charge air cooler and interconnecting pipe pressure drop, for turbo-charged engines tested with a

laboratory heat exchanger that simulates an installed charge air cooler.

(B) Fuel outlet.

TABLE 1 OF § 1065.307—MEASUREMENT SYSTEMS THAT REQUIRE LINEARITY VERIFICATION

Measurement system	Quantity	Linearity criteria			
		$\lvert x_{min}(a_1 - 1) + a_0 \rvert$	a_1	*SEE*	r^2
Speed	f_n	$\leq 0.05\% \cdot f_{nmax}$	0.98–1.02	$\leq 2\% \cdot f_{nmax}$	≥0.990
Torque	T	$\leq 1\% \cdot T_{max}$	0.98–1.02	$\leq 2\% \cdot T_{max}$	≥0.990
Electrical power	P	$\leq 1\% \cdot P_{max}$	0.98–1.02	$\leq 2\% \cdot P_{max}$	≥0.990
Current	I	$\leq 1\% \cdot I_{max}$	0.98–1.02	$\leq 2\% \cdot I_{max}$	≥0.990
Voltage	U	$\leq 1\% \cdot U_{max}$	0.98–1.02	$\leq 2\% \cdot U_{max}$	≥0.990
Fuel flow rate	$\dot{m}$	$\leq 1\% \cdot \dot{m}_{max}$	0.98–1.02	$\leq 2\% \cdot \dot{m}_{max}$	≥0.990
Intake-air flow rate[1]	$\dot{n}$	$\leq 1\% \cdot \dot{n}_{max}$	0.98–1.02	$\leq 2\% \cdot \dot{n}_{max}$	≥0.990
Dilution air flow rate[1]	$\dot{n}$	$\leq 1\% \cdot \dot{n}_{max}$	0.98–1.02	$\leq 2\% \cdot \dot{n}_{max}$	≥0.990
Diluted exhaust flow rate[1]	$\dot{n}$	$\leq 1\% \cdot \dot{n}_{max}$	0.98–1.02	$\leq 2\% \cdot \dot{n}_{max}$	≥0.990
Raw exhaust flow rate[1]	$\dot{n}$	$\leq 1\% \cdot \dot{n}_{max}$	0.98–1.02	$\leq 2\% \cdot \dot{n}_{max}$	≥0.990
Batch sampler flow rates[1]	$\dot{n}$	$\leq 1\% \cdot \dot{n}_{max}$	0.98–1.02	$\leq 2\% \cdot \dot{n}_{max}$	≥0.990
Gas dividers	x/x_{span}	$\leq 0.5\% \cdot x_{max}/x_{span}$	0.98–1.02	$\leq 2\% \cdot x_{max}/x_{span}$	≥0.990
Gas analyzers for laboratory testing	x	$\leq 0.5\% \cdot x_{max}$	0.99–1.01	$\leq 1\% \cdot x_{max}$	≥0.998
Gas analyzers for field testing	x	$\leq 1\% \cdot x_{max}$	0.99–1.01	$\leq 1\% \cdot x_{max}$	≥0.998
PM balance	m	$\leq 1\% \cdot m_{max}$	0.99–1.01	$\leq 1\% \cdot m_{max}$	≥0.998
Pressures	p	$\leq 1\% \cdot p_{max}$	0.99–1.01	$\leq 1\% \cdot p_{max}$	≥0.998
Dewpoint for intake air, PM-stabilization and balance environments.	T_{dew}	$\leq 0.5\% \cdot T_{dewmax}$	0.99–1.01	$\leq 0.5\% \cdot T_{dewmax}$	≥0.998
Other dewpoint measurements	T_{dew}	$\leq 1\% \cdot T_{dewmax}$	0.99–1.01	$\leq 1\% \cdot T_{dewmax}$	≥0.998
Analog-to-digital conversion of temperature signals.	T	$\leq 1\% \cdot T_{max}$	0.99–1.01	$\leq 1\% \cdot T_{max}$	≥0.998

[1] For flow meters that determine volumetric flow rate, $\dot{V}_{std}$, you may substitute $\dot{V}_{std}$ for $\dot{n}$ as the quantity and substitute $\dot{V}_{stdmax}$ for $\dot{n}_{max}$.

[79 FR 23763, Apr. 28, 2014]

EFFECTIVE DATE NOTE: At 86 FR 34538, June 29, 2021, § 1065.307 was amended, effective July 29, 2021.

§ 1065.308 Continuous gas analyzer system-response and updating-recording verification—for gas analyzers not continuously compensated for other gas species.

(a) *Scope and frequency*. This section describes a verification procedure for system response and updating-recording frequency for continuous gas analyzers that output a gas species mole fraction (i.e., concentration) using a single gas detector, i.e., gas analyzers not continuously compensated for other gas species measured with multiple gas detectors. See § 1065.309 for verification procedures that apply to continuous gas analyzers that are continuously compensated for other gas species measured with multiple gas detectors. Perform this verification to determine the system response of the continuous gas analyzer and its sampling system. This verification is required for continuous gas analyzers used for transient or ramped-modal testing. You need not perform this verification for batch gas analyzer systems or for continuous gas analyzer systems that are used only for discrete-mode testing. Perform this verification after initial installation (i.e., test cell commissioning) and after any modifications to the system that would change system response. For example, perform this verification if you add a significant volume to the transfer lines by increasing their length or adding a filter; or if you reduce the frequency at which the gas analyzer updates its output or the frequency at which you sample and record gas-analyzer concentrations.

(b) *Measurement principles*. This test verifies that the updating and recording frequencies match the overall system response to a rapid change in the value of concentrations at the sample probe. Gas analyzers and their sampling systems must be optimized such that their overall response to a rapid change in concentration is updated and recorded at an appropriate frequency to prevent loss of information. This test also verifies that the measurement system meets a minimum response

time. You may use the results of this test to determine transformation time, t_{50}, for the purposes of time alignment of continuous data in accordance with §1065.650(c)(2)(i). You may also use an alternate procedure to determine t_{50} in accordance with good engineering judgment. Note that any such procedure for determining t_{50} must account for both transport delay and analyzer response time.

(c) *System requirements.* Demonstrate that each continuous analyzer has adequate update and recording frequencies and has a minimum rise time and a minimum fall time during a rapid change in gas concentration. You must meet one of the following criteria:

(1) The product of the mean rise time, t_{10-90}, and the frequency at which the system records an updated concentration must be at least 5, and the product of the mean fall time, t_{90-10}, and the frequency at which the system records an updated concentration must be at least 5. If the recording frequency is different than the analyzer's output update frequency, you must use the lower of these two frequencies for this verification, which is referred to as the updating-recording frequency. This verification applies to the nominal updating and recording frequencies. This criterion makes no assumption regarding the frequency content of changes in emission concentrations during emission testing; therefore, it is valid for any testing. Also, the mean rise time must be at or below 10 seconds and the mean fall time must be at or below 10 seconds.

(2) The frequency at which the system records an updated concentration must be at least 5 Hz. This criterion assumes that the frequency content of significant changes in emission concentrations during emission testing do not exceed 1 Hz. Also, the mean rise time must be at or below 10 seconds and the mean fall time must be at or below 10 seconds.

(3) You may use other criteria if we approve the criteria in advance.

(4) You may meet the overall PEMS verification in §1065.920 instead of the verification in this section for field testing with PEMS.

(d) *Procedure.* Use the following procedure to verify the response of each continuous gas analyzer:

(1) *Instrument setup.* Follow the analyzer manufacturer's start-up and operating instructions. Adjust the measurement system as needed to optimize performance. Run this verification with the analyzer operating in the same manner you will use for emission testing. If the analyzer shares its sampling system with other analyzers, and if gas flow to the other analyzers will affect the system response time, then start up and operate the other analyzers while running this verification test. You may run this verification test on multiple analyzers sharing the same sampling system at the same time. If you use any analog or real-time digital filters during emission testing, you must operate those filters in the same manner during this verification.

(2) *Equipment setup.* We recommend using minimal lengths of gas transfer lines between all connections and fast-acting three-way valves (2 inlets, 1 outlet) to control the flow of zero and blended span gases to the sample system's probe inlet or a tee near the outlet of the probe. If you inject the gas at a tee near the outlet of the probe, you may correct the transformation time, t_{50}, for an estimate of the transport time from the probe inlet to the tee. Normally the gas flow rate is higher than the sample flow rate and the excess is overflowed out the inlet of the probe. If the gas flow rate is lower than the sample flow rate, the gas concentrations must be adjusted to account for the dilution from ambient air drawn into the probe. We recommend you use the final, stabilized analyzer reading as the final gas concentration. Select span gases for the species being measured. You may use binary or multi-gas span gases. You may use a gas blending or mixing device to blend span gases. A gas blending or mixing device is recommended when blending span gases diluted in N_2 with span gases diluted in air. You may use a multi-gas span gas, such as NO–CO–CO_2-C_3H_8-CH_4, to verify multiple analyzers at the same time. If you use standard binary span gases, you must run separate response tests for each analyzer. In designing your experimental

setup, avoid pressure pulsations due to stopping the flow through the gas-blending device. The change in gas concentration must be at least 20% of the analyzer's range.

(3) *Data collection.* (i) Start the flow of zero gas.

(ii) Allow for stabilization, accounting for transport delays and the slowest analyzer's full response.

(iii) Start recording data. For this verification you must record data at a frequency greater than or equal to that of the updating-recording frequency used during emission testing. You may not use interpolation or filtering to alter the recorded values.

(iv) Switch the flow to allow the blended span gases to flow to the analyzer. If you intend to use the data from this test to determine t_{50} for time alignment, record this time as t_0.

(v) Allow for transport delays and the slowest analyzer's full response.

(vi) Switch the flow to allow zero gas to flow to the analyzer. If you intend to use the data from this test to determine t_{50} for time alignment, record this time as t_{100}.

(vii) Allow for transport delays and the slowest analyzer's full response.

(viii) Repeat the steps in paragraphs (d)(3)(iv) through (vii) of this section to record seven full cycles, ending with zero gas flowing to the analyzers.

(ix) Stop recording.

(e) *Performance evaluation.* (1) If you choose to demonstrate compliance with paragraph (c)(1) of this section, use the data from paragraph (d)(3) of this section to calculate the mean rise time, t_{10-90}, and mean fall time, t_{90-10}, for each of the analyzers being verified. You may use interpolation between recorded values to determine rise and fall times. If the recording frequency used during emission testing is different from the analyzer's output update frequency, you must use the lower of these two frequencies for this verification. Multiply these times (in seconds) by their respective updating-recording frequencies in Hertz (1/second). The resulting product must be at least 5 for both rise time and fall time. If either value is less than 5, increase the updating-recording frequency, or adjust the flows or design of the sampling system to increase the rise time and fall time as needed. You may also configure analog or digital filters before recording to increase rise and fall times. In no case may the mean rise time or mean fall time be greater than 10 seconds.

(2) If a measurement system fails the criterion in paragraph (e)(1) of this section, ensure that signals from the system are updated and recorded at a frequency of at least 5 Hz. In no case may the mean rise time or mean fall time be greater than 10 seconds.

(3) If a measurement system fails the criteria in paragraphs (e)(1) and (2) of this section, you may use the measurement system only if the deficiency does not adversely affect your ability to show compliance with the applicable standards.

(f) *Transformation time,* t_{50}, determination. If you choose to determine t_{50} for purposes of time alignment using data generated in paragraph (d)(3) of this section, calculate the mean t_{0-50} and the mean t_{100-50} from the recorded data. Average these two values to determine the final t_{50} for the purposes of time alignment in accordance with § 1065.650(c)(2)(i).

(g) *Optional procedure.* Instead of using a three-way valve to switch between zero and span gases, you may use a fast-acting two-way valve to switch sampling between ambient air and span gas at the probe inlet. For this alternate procedure, the following provisions apply:

(1) If your probe is sampling from a continuously flowing gas stream (e.g., a CVS tunnel), you may adjust the span gas flow rate to be different than the sample flow rate.

(2) If your probe is sampling from a gas stream that is not continuously flowing (e.g., a raw exhaust stack), you must adjust the span gas flow rate to be less than the sample flow rate so ambient air is always being drawn into the probe inlet. This avoids errors associated with overflowing span gas out of the probe inlet and drawing it back in when sampling ambient air.

(3) When sampling ambient air or ambient air mixed with span gas, all the analyzer readings must be stable within ±0.5% of the target gas concentration step size. If any analyzer reading is outside the specified range, you must

resolve the problem and verify that all the analyzer readings meet this specification.

(4) For oxygen analyzers, you may use purified N_2 as the zero gas and ambient air (plus purified N_2 if needed) as the reference gas. Perform the verification with seven repeat measurements that each consist of stabilizing with purified N_2, switching to ambient air and observing the analyzer's rise and stabilized reading, followed by switching back to purified N_2 and observing the analyzer's fall and stabilized reading.

[73 FR 59325, Oct. 8, 2008, as amended at 79 FR 23766, Apr. 28, 2014]

§ 1065.309 Continuous gas analyzer system-response and updating-recording verification—for gas analyzers continuously compensated for other gas species.

(a) *Scope and frequency.* This section describes a verification procedure for system response and updating-recording frequency for continuous gas analyzers that output a single gas species mole fraction (i.e., concentration) based on a continuous combination of multiple gas species measured with multiple detectors (i.e., gas analyzers continuously compensated for other gas species). See § 1065.308 for verification procedures that apply to continuous gas analyzers that are not continuously compensated for other gas species or that use only one detector for gaseous species. Perform this verification to determine the system response of the continuous gas analyzer and its sampling system. This verification is required for continuous gas analyzers used for transient or ramped-modal testing. You need not perform this verification for batch gas analyzers or for continuous gas analyzers that are used only for discrete-mode testing. For this check we consider water vapor a gaseous constituent. This verification does not apply to any processing of individual analyzer signals that are time-aligned to their t_{50} times and were verified according to § 1065.308. For example, this verification does not apply to correction for water removed from the sample done in post-processing according to § 1065.659 (40 CFR 1066.620 for vehicle testing) and it does not apply to NMHC determination from THC and CH_4 according to § 1065.660. Perform this verification after initial installation (i.e., test cell commissioning) and after any modifications to the system that would change the system response.

(b) *Measurement principles.* This procedure verifies that the updating and recording frequencies match the overall system response to a rapid change in the value of concentrations at the sample probe. It indirectly verifies the time-alignment and uniform response of all the continuous gas detectors used to generate a continuously combined/compensated concentration measurement signal. Gas analyzer systems must be optimized such that their overall response to rapid change in concentration is updated and recorded at an appropriate frequency to prevent loss of information. This test also verifies that the measurement system meets a minimum response time. For this procedure, ensure that all compensation algorithms and humidity corrections are turned on. You may use the results of this test to determine transformation time, t_{50}, for the purposes of time alignment of continuous data in accordance with § 1065.650(c)(2)(i). You may also use an alternate procedure to determine t_{50} consistent with good engineering judgment. Note that any such procedure for determining t_{50} must account for both transport delay and analyzer response time.

(c) *System requirements.* Demonstrate that each continuously combined/compensated concentration measurement has adequate updating and recording frequencies and has a minimum rise time and a minimum fall time during a system response to a rapid change in multiple gas concentrations, including H_2O concentration if H_2O compensation is applied. You must meet one of the following criteria:

(1) The product of the mean rise time, t_{10-90}, and the frequency at which the system records an updated concentration must be at least 5, and the product of the mean fall time, t_{90-10}, and the frequency at which the system records an updated concentration must be at least 5. If the recording frequency is different than the update frequency

of the continuously combined/compensated signal, you must use the lower of these two frequencies for this verification. This criterion makes no assumption regarding the frequency content of changes in emission concentrations during emission testing; therefore, it is valid for any testing. Also, the mean rise time must be at or below 10 seconds and the mean fall time must be at or below 10 seconds.

(2) The frequency at which the system records an updated concentration must be at least 5 Hz. This criterion assumes that the frequency content of significant changes in emission concentrations during emission testing do not exceed 1 Hz. Also, the mean rise time must be at or below 10 seconds and the mean fall time must be at or below 10 seconds.

(3) You may use other criteria if we approve them in advance.

(4) You may meet the overall PEMS verification in § 1065.920 instead of the verification in this section for field testing with PEMS.

(d) *Procedure*. Use the following procedure to verify the response of each continuously compensated analyzer (verify the combined signal, not each individual continuously combined concentration signal):

(1) *Instrument setup*. Follow the analyzer manufacturer's start-up and operating instructions. Adjust the measurement system as needed to optimize performance. Run this verification with the analyzer operating in the same manner you will use for emission testing. If the analyzer shares its sampling system with other analyzers, and if gas flow to the other analyzers will affect the system response time, then start up and operate the other analyzers while running this verification test. You may run this verification test on multiple analyzers sharing the same sampling system at the same time. If you use any analog or real-time digital filters during emission testing, you must operate those filters in the same manner during this verification.

(2) *Equipment setup*. We recommend using minimal lengths of gas transfer lines between all connections and fast-acting three-way valves (2 inlets, 1 outlet) to control the flow of zero and blended span gases to the sample system's probe inlet or a tee near the outlet of the probe. If you inject the gas at a tee near the outlet of the probe, you may correct the transformation time, t_{50}, for an estimate of the transport time from the probe inlet to the tee. Normally the gas flow rate is higher than the sample flow rate and the excess is overflowed out the inlet of the probe. If the gas flow rate is lower than the sample flow rate, the gas concentrations must be adjusted to account for the dilution from ambient air drawn into the probe. We recommend you use the final, stabilized analyzer reading as the final gas concentration. Select span gases for the species being continuously combined, other than H_2O. Select concentrations of compensating species that will yield concentrations of these species at the analyzer inlet that covers the range of concentrations expected during testing. You may use binary or multi-gas span gases. You may use a gas blending or mixing device to blend span gases. A gas blending or mixing device is recommended when blending span gases diluted in N_2 with span gases diluted in air. You may use a multi-gas span gas, such as NO–CO–CO_2-C_3H_8-CH_4, to verify multiple analyzers at the same time. In designing your experimental setup, avoid pressure pulsations due to stopping the flow through the gas blending device. The change in gas concentration must be at least 20% of the analyzer's range. If H_2O correction is applicable, then span gases must be humidified before entering the analyzer; however, you may not humidify NO_2 span gas by passing it through a sealed humidification vessel that contains water. You must humidify NO_2 span gas with another moist gas stream. We recommend humidifying your NO–CO–CO_2-C_3H_8-CH_4, balance N_2 blended gas by flowing the gas mixture through a sealed vessel that humidifies the gas by bubbling it through distilled water and then mixing the gas with dry NO_2 gas, balance purified air. If your system does not use a sample dryer to remove water from the sample gas, you must humidify your span gas to the highest sample H_2O content that you estimate during emission sampling. If your system uses a sample dryer during testing, it must pass the sample dryer

verification check in §1065.342, and you must humidify your span gas to an H_2O content greater than or equal to the level determined in §1065.145(e)(2). If you are humidifying span gases without NO_2, use good engineering judgment to ensure that the wall temperatures in the transfer lines, fittings, and valves from the humidifying system to the probe are above the dewpoint required for the target H_2O content. If you are humidifying span gases with NO_2, use good engineering judgment to ensure that there is no condensation in the transfer lines, fittings, or valves from the point where humidified gas is mixed with NO_2 span gas to the probe. We recommend that you design your setup so that the wall temperatures in the transfer lines, fittings, and valves from the humidifying system to the probe are at least 5 °C above the local sample gas dewpoint. Operate the measurement and sample handling system as you do for emission testing. Make no modifications to the sample handling system to reduce the risk of condensation. Flow humidified gas through the sampling system before this check to allow stabilization of the measurement system's sampling handling system to occur, as it would for an emission test.

(3) *Data collection.* (i) Start the flow of zero gas.

(ii) Allow for stabilization, accounting for transport delays and the slowest analyzer's full response.

(iii) Start recording data. For this verification you must record data at a frequency greater than or equal to that of the updating-recording frequency used during emission testing. You may not use interpolation or filtering to alter the recorded values.

(iv) Switch the flow to allow the blended span gases to flow to the analyzer. If you intend to use the data from this test to determine t_{50} for time alignment, record this time as t_0.

(v) Allow for transport delays and the slowest analyzer's full response.

(vi) Switch the flow to allow zero gas to flow to the analyzer. If you intend to use the data from this test to determine t_{50} for time alignment, record this time as t_{100}.

(vii) Allow for transport delays and the slowest analyzer's full response.

(viii) Repeat the steps in paragraphs (d)(3)(iv) through (vii) of this section to record seven full cycles, ending with zero gas flowing to the analyzers.

(ix) Stop recording.

(e) *Performance evaluations.* (1) If you choose to demonstrate compliance with paragraph (c)(1) of this section, use the data from paragraph (d)(3) of this section to calculate the mean rise time, t_{10-90}, and mean fall time, t_{90-10}, for the continuously combined signal from each analyzer being verified. You may use interpolation between recorded values to determine rise and fall times. If the recording frequency used during emission testing is different from the analyzer's output update frequency, you must use the lower of these two frequencies for this verification. Multiply these times (in seconds) by their respective updating-recording frequencies in Hz (1/second). The resulting product must be at least 5 for both rise time and fall time. If either value is less than 5, increase the updating-recording frequency or adjust the flows or design of the sampling system to increase the rise time and fall time as needed. You may also configure analog or digital filters before recording to increase rise and fall times. In no case may the mean rise time or mean fall time be greater than 10 seconds.

(2) If a measurement system fails the criterion in paragraph (e)(1) of this section, ensure that signals from the system are updated and recorded at a frequency of at least 5 Hz. In no case may the mean rise time or mean fall time be greater than 10 seconds.

(3) If a measurement system fails the criteria in paragraphs (e)(1) and (2) of this section, you may use the measurement system only if the deficiency does not adversely affect your ability to show compliance with the applicable standards.

(f) *Transformation time, t_{50}, determination.* If you choose to determine t_{50} for purposes of time alignment using data generated in paragraph (d)(3) of this section, calculate the mean t_{0-50} and the mean t_{100-50} from the recorded data. Average these two values to determine the final t_{50} for the purposes of time alignment in accordance with §1065.650(c)(2)(i).

(g) *Optional procedure.* Follow the optional procedures in § 1065.308(g), noting that you may use compensating gases mixed with ambient air for oxygen analyzers.

(h) *Analyzers with H_2O compensation sampling downstream of a sample dryer.* You may omit humidifying the span gas as described in this paragraph (h). If an analyzer compensates only for H_2O, you may apply the requirements of § 1065.308 instead of the requirements of this section. You may omit humidifying the span gas if you meet the following conditions:

(1) The analyzer is located downstream of a sample dryer.

(2) The maximum value for H_2O mole fraction downstream of the dryer must be less than or equal to 0.010. Verify this during each sample dryer verification according to § 1065.342.

[73 FR 59326, Oct. 8, 2008, as amended at 75 FR 23039, Apr. 30, 2010; 79 FR 23767, Apr. 28, 2014]

EFFECTIVE DATE NOTE: At 86 FR 34541, June 29, 2021, § 1065.309 was amended, effective July 29, 2021.

MEASUREMENT OF ENGINE PARAMETERS AND AMBIENT CONDITIONS

§ 1065.310 Torque calibration.

(a) *Scope and frequency.* Calibrate all torque-measurement systems including dynamometer torque measurement transducers and systems upon initial installation and after major maintenance. Use good engineering judgment to repeat the calibration. Follow the torque transducer manufacturer's instructions for linearizing your torque sensor's output. We recommend that you calibrate the torque-measurement system with a reference force and a lever arm.

(b) *Recommended procedure to quantify lever-arm length.* Quantify the lever-arm length, NIST-traceable within ±0.5% uncertainty. The lever arm's length must be measured from the centerline of the dynamometer to the point at which the reference force is measured. The lever arm must be perpendicular to gravity (i.e., horizontal), and it must be perpendicular to the dynamometer's rotational axis. Balance the lever arm's torque or quantify its net hanging torque, NIST-traceable within ±1% uncertainty, and account for it as part of the reference torque.

(c) *Recommended procedure to quantify reference force.* We recommend dead-weight calibration, but you may use either of the following procedures to quantify the reference force, NIST-traceable within ±0.5% uncertainty.

(1) *Dead-weight calibration.* This technique applies a known force by hanging known weights at a known distance along a lever arm. Make sure the weights' lever arm is perpendicular to gravity (i.e., horizontal) and perpendicular to the dynamometer's rotational axis. Apply at least six calibration-weight combinations for each applicable torque-measuring range, spacing the weight quantities about equally over the range. Oscillate or rotate the dynamometer during calibration to reduce frictional static hysteresis. Determine each weight's reference force by multiplying its NIST-traceable mass by the local acceleration of Earth's gravity, as described in § 1065.630. Calculate the reference torque as the weights' reference force multiplied by the lever arm reference length.

(2) *Strain gage, load transducer, or proving ring calibration.* This technique applies force either by hanging weights on a lever arm (these weights and their lever arm length are not used as part of the reference torque determination) or by operating the dynamometer at different torques. Apply at least six force combinations for each applicable torque-measuring range, spacing the force quantities about equally over the range. Oscillate or rotate the dynamometer during calibration to reduce frictional static hysteresis. In this case, the reference torque is determined by multiplying the force output from the reference meter (such as a strain gage, load transducer, or proving ring) by its effective lever-arm length, which you measure from the point where the force measurement is made to the dynamometer's rotational axis. Make sure you measure this length perpendicular to the reference meter's measurement axis and perpendicular to the dynamometer's rotational axis.

[79 FR 23768, Apr. 28, 2014]

§ 1065.315 Pressure, temperature, and dewpoint calibration.

(a) Calibrate instruments for measuring pressure, temperature, and dewpoint upon initial installation. Follow the instrument manufacturer's instructions and use good engineering judgment to repeat the calibration, as follows:

(1) *Pressure*. We recommend temperature-compensated, digital-pneumatic, or deadweight pressure calibrators, with data-logging capabilities to minimize transcription errors. We recommend using calibration reference quantities that are NIST-traceable within 0.5% uncertainty.

(2) *Temperature*. We recommend digital dry-block or stirred-liquid temperature calibrators, with data logging capabilities to minimize transcription errors. We recommend using calibration reference quantities that are NIST-traceable within 0.5% uncertainty. You may perform linearity verification for temperature measurement systems with thermocouples, RTDs, and thermistors by removing the sensor from the system and using a simulator in its place. Use a NIST-traceable simulator that is independently calibrated and, as appropriate, cold-junction compensated. The simulator uncertainty scaled to absolute temperature must be less than 0.5% of T_{max}. If you use this option, you must use sensors that the supplier states are accurate to better than 0.5% of T_{max} compared with their standard calibration curve.

(3) *Dewpoint*. We recommend a minimum of three different temperature-equilibrated and temperature-monitored calibration salt solutions in containers that seal completely around the dewpoint sensor. We recommend using calibration reference quantities that are NIST-traceable within 0.5% uncertainty.

(b) You may remove system components for off-site calibration. We recommend specifying calibration reference quantities that are NIST-traceable within 0.5% uncertainty.

[70 FR 40516, July 13, 2005, as amended at 73 FR 37305, June 30, 2008; 75 FR 23040, Apr. 30, 2010; 79 FR 23768, Apr. 28, 2014]

FLOW-RELATED MEASUREMENTS

§ 1065.320 Fuel-flow calibration.

(a) Calibrate fuel-flow meters upon initial installation. Follow the instrument manufacturer's instructions and use good engineering judgment to repeat the calibration.

(b) You may also develop a procedure based on a chemical balance of carbon or oxygen in engine exhaust.

(c) You may remove system components for off-site calibration. When installing a flow meter with an off-site calibration, we recommend that you consider the effects of the tubing configuration upstream and downstream of the flow meter. We recommend specifying calibration reference quantities that are NIST-traceable within 0.5% uncertainty.

EFFECTIVE DATE NOTE: At 86 FR 34541, June 29, 2021, § 1065.320 was amended, effective July 29, 2021.

§ 1065.325 Intake-flow calibration.

(a) Calibrate intake-air flow meters upon initial installation. Follow the instrument manufacturer's instructions and use good engineering judgment to repeat the calibration. We recommend using a calibration subsonic venturi, ultrasonic flow meter or laminar flow element. We recommend using calibration reference quantities that are NIST-traceable within 0.5% uncertainty.

(b) You may remove system components for off-site calibration. When installing a flow meter with an off-site calibration, we recommend that you consider the effects of the tubing configuration upstream and downstream of the flow meter. We recommend specifying calibration reference quantities that are NIST-traceable within 0.5% uncertainty.

(c) If you use a subsonic venturi or ultrasonic flow meter for intake flow measurement, we recommend that you calibrate it as described in § 1065.340.

§ 1065.330 Exhaust-flow calibration.

(a) Calibrate exhaust-flow meters upon initial installation. Follow the instrument manufacturer's instructions and use good engineering judgment to repeat the calibration. We recommend that you use a calibration subsonic

venturi or ultrasonic flow meter and simulate exhaust temperatures by incorporating a heat exchanger between the calibration meter and the exhaust-flow meter. If you can demonstrate that the flow meter to be calibrated is insensitive to exhaust temperatures, you may use other reference meters such as laminar flow elements, which are not commonly designed to withstand typical raw exhaust temperatures. We recommend using calibration reference quantities that are NIST-traceable within 0.5% uncertainty.

(b) You may remove system components for off-site calibration. When installing a flow meter with an off-site calibration, we recommend that you consider the effects of the tubing configuration upstream and downstream of the flow meter. We recommend specifying calibration reference quantities that are NIST-traceable within 0.5% uncertainty.

(c) If you use a subsonic venturi or ultrasonic flow meter for raw exhaust flow measurement, we recommend that you calibrate it as described in § 1065.340.

§ 1065.340 Diluted exhaust flow (CVS) calibration.

(a) *Overview*. This section describes how to calibrate flow meters for diluted exhaust constant-volume sampling (CVS) systems.

(b) *Scope and frequency*. Perform this calibration while the flow meter is installed in its permanent position, except as allowed in paragraph (c) of this section. Perform this calibration after you change any part of the flow configuration upstream or downstream of the flow meter that may affect the flow-meter calibration. Perform this calibration upon initial CVS installation and whenever corrective action does not resolve a failure to meet the diluted exhaust flow verification (*i.e.*, propane check) in § 1065.341.

(c) *Ex-situ CFV and SSV calibration*. You may remove a CFV or SSV from its permanent position for calibration as long as it meets the following requirements when installed in the CVS:

(1) Upon installation of the CFV or SSV into the CVS, use good engineering judgment to verify that you have not introduced any leaks between the CVS inlet and the venturi.

(2) After ex-situ venturi calibration, you must verify all venturi flow combinations for CFVs or at minimum of 10 flow points for an SSV using the propane check as described in § 1065.341. Your propane check result for each venturi flow point may not exceed the tolerance in § 1065.341(f)(5).

(3) To verify your ex-situ calibration for a CVS with more than a single CFV, perform the following check to verify that there are no flow meter entrance effects that can prevent you from passing this verification.

(i) Use a constant flow device like a CFO kit to deliver a constant flow of propane to the dilution tunnel.

(ii) Measure hydrocarbon concentrations at a minimum of 10 separate flow rates for an SSV flow meter, or at all possible flow combinations for a CFV flow meter, while keeping the flow of propane constant. We recommend selecting CVS flow rates in a random order.

(iii) Measure the concentration of hydrocarbon background in the dilution air at the beginning and end of this test. Subtract the average background concentration from each measurement at each flow point before performing the regression analysis in paragraph (c)(3)(iv) of this section.

(iv) Perform a power regression using all the paired values of flow rate and corrected concentration to obtain a relationship in the form of $y = a \cdot x^{b}$. Use concentration as the independent variable and flow rate as the dependent variable. For each data point, calculate the difference between the measured flow rate and the value represented by the curve fit. The difference at each point must be less than ±1% of the appropriate regression value. The value of b must be between −1.005 and −0.995. If your results do not meet these limits, take corrective action consistent with § 1065.341(a).

(d) *Reference flow meter*. Calibrate a CVS flow meter using a reference flow meter such as a subsonic venturi flow meter, a long-radius ASME/NIST flow nozzle, a smooth approach orifice, a laminar flow element, a set of critical flow venturis, or an ultrasonic flow meter. Use a reference flow meter that

reports quantities that are NIST-traceable within ±1% uncertainty. Use this reference flow meter's response to flow as the reference value for CVS flowmeter calibration.

(e) *Configuration*. Calibrate the system with any upstream screens or other restrictions that will be used during testing and that could affect the flow ahead of the CVS flow meter, using good engineering judgment to minimize the effect on the flow distribution. You may not use any upstream screen or other restriction that could affect the flow ahead of the reference flow meter, unless the flow meter has been calibrated with such a restriction. In the case of a free standing SSV reference flow meter, you may not have any upstream screens.

(f) *PDP calibration*. Calibrate a positive-displacement pump (PDP) to determine a flow-versus-PDP speed equation that accounts for flow leakage across sealing surfaces in the PDP as a function of PDP inlet pressure. Determine unique equation coefficients for each speed at which you operate the PDP. Calibrate a PDP flow meter as follows:

(1) Connect the system as shown in Figure 1 of this section.

(2) Leaks between the calibration flow meter and the PDP must be less than 0.3% of the total flow at the lowest calibrated flow point; for example, at the highest restriction and lowest PDP-speed point.

(3) While the PDP operates, maintain a constant temperature at the PDP inlet within ±2% of the mean absolute inlet temperature, $\bar{T}_{in}$.

(4) Set the PDP speed to the first speed point at which you intend to calibrate.

(5) Set the variable restrictor to its wide-open position.

(6) Operate the PDP for at least 3 min to stabilize the system. Continue operating the PDP and record the mean values of at least 30 seconds of sampled data of each of the following quantities:

(i) The mean flow rate of the reference flow meter, $\bar{\dot{n}}_{ref}$. This may include several measurements of different quantities, such as reference meter pressures and temperatures, for calculating $\bar{\dot{n}}_{ref}$.

(ii) The mean temperature at the PDP inlet, $\bar{T}_{in}$.

(iii) The mean static absolute pressure at the PDP inlet, $\bar{p}_{in}$.

(iv) The mean static absolute pressure at the PDP outlet, $\bar{p}_{out}$.

(v) The mean PDP speed, $\bar{f}_{nPDP}$.

(7) Incrementally close the restrictor valve to decrease the absolute pressure at the inlet to the PDP, $\bar{p}_{in}$.

(8) Repeat the steps in paragraphs (e)(6) and (7) of this section to record data at a minimum of six restrictor positions ranging from the wide open restrictor position to the minimum expected pressure at the PDP inlet or the maximum expected differential (outlet minus inlet) pressure across the PDP during testing.

(9) Calibrate the PDP by using the collected data and the equations in §1065.640.

(10) Repeat the steps in paragraphs (e)(6) through (9) of this section for each speed at which you operate the PDP.

(11) Use the equations in §1065.642 to determine the PDP flow equation for emission testing.

(12) Verify the calibration by performing a CVS verification (*i.e.*, propane check) as described in §1065.341.

(13) During emission testing ensure that the PDP is not operated either below the lowest inlet pressure point or above the highest differential pressure point in the calibration data.

(g) *SSV calibration*. Calibrate a subsonic venturi (SSV) to determine its calibration coefficient, C_d, for the expected range of inlet pressures. Calibrate an SSV flow meter as follows:

(1) Connect the system as shown in Figure 1 of this section.

(2) Verify that any leaks between the calibration flow meter and the SSV are less than 0.3% of the total flow at the highest restriction.

(3) Start the blower downstream of the SSV.

(4) While the SSV operates, maintain a constant temperature at the SSV inlet within ±2% of the mean absolute inlet temperature, $\bar{T}_{in}$.

(5) Set the variable restrictor or variable-speed blower to a flow rate greater than the greatest flow rate expected

during testing. You may not extrapolate flow rates beyond calibrated values, so we recommend that you make sure the Reynolds number, $Re^{\#}$, at the SSV throat at the greatest calibrated flow rate is greater than the maximum $Re^{\#}$ expected during testing.

(6) Operate the SSV for at least 3 min to stabilize the system. Continue operating the SSV and record the mean of at least 30 seconds of sampled data of each of the following quantities:

(i) The mean flow rate of the reference flow meter $\overline{n}_{ref}$. This may include several measurements of different quantities for calculating $\overline{n}_{ref}$, such as reference meter pressures and temperatures.

(ii) Optionally, the mean dewpoint of the calibration air, $\bar{T}_{dew}$. See §1065.640 for permissible assumptions.

(iii) The mean temperature at the venturi inlet, $\bar{T}_{in}$.

(iv) The mean static absolute pressure at the venturi inlet, $\bar{P}_{in}$.

(v) The mean static differential pressure between the static pressure at the venturi inlet and the static pressure at the venturi throat, $\Delta\bar{P}_{SSV}$.

(7) Incrementally close the restrictor valve or decrease the blower speed to decrease the flow rate.

(8) Repeat the steps in paragraphs (g)(6) and (7) of this section to record data at a minimum of ten flow rates.

(9) Determine an equation to quantify C_d as a function of $Re^{\#}$ by using the collected data and the equations in §1065.640. Section 1065.640 also includes statistical criteria for validating the C_d versus $Re^{\#}$ equation.

(10) Verify the calibration by performing a CVS verification (*i.e.*, propane check) as described in §1065.341 using the new C_d versus $Re^{\#}$ equation.

(11) Use the SSV only between the minimum and maximum calibrated $Re^{\#}$. If you want to use the SSV at a lower or higher $Re^{\#}$, you must recalibrate the SSV.

(12) Use the equations in §1065.642 to determine SSV flow during a test.

(h) *CFV calibration*. Calibrate a critical-flow venturi (CFV) to verify its discharge coefficient, C_d, up to the highest expected pressure ratio, r, according to §1065.640. Calibrate a CFV flow meter as follows:

(1) Connect the system as shown in Figure 1 of this section.

(2) Verify that any leaks between the calibration flow meter and the CFV are less than 0.3% of the total flow at the highest restriction.

(3) Start the blower downstream of the CFV.

(4) While the CFV operates, maintain a constant temperature at the CFV inlet within ±2% of the mean absolute inlet temperature, $\bar{T}_{in}$.

(5) Set the variable restrictor to its wide-open position. Instead of a variable restrictor, you may alternately vary the pressure downstream of the CFV by varying blower speed or by introducing a controlled leak. Note that some blowers have limitations on nonloaded conditions.

(6) Operate the CFV for at least 3 min to stabilize the system. Continue operating the CFV and record the mean values of at least 30 seconds of sampled data of each of the following quantities:

(i) The mean flow rate of the reference flow meter, $\overline{n}_{ref}$. This may include several measurements of different quantities, such as reference meter pressures and temperatures, for calculating $\overline{n}_{ref}$.

(ii) The mean dewpoint of the calibration air, $\bar{T}_{dew}$. See §1065.640 for permissible assumptions during emission measurements.

(iii) The mean temperature at the venturi inlet, $\bar{T}_{in}$.

(iv) The mean static absolute pressure at the venturi inlet, $\bar{P}_{in}$.

(v) The mean static differential pressure between the CFV inlet and the CFV outlet, $\Delta\bar{P}_{CFV}$.

(7) Incrementally close the restrictor valve or decrease the downstream pressure to decrease the differential pressure across the CFV, Δp_{CFV}.

(8) Repeat the steps in paragraphs (f)(6) and (7) of this section to record mean data at a minimum of ten restrictor positions, such that you test the fullest practical range of $\Delta\bar{P}_{CFV}$ expected during testing. We do not require that you remove calibration components or CVS components to calibrate at the lowest possible restrictions.

(9) Determine C_d and the highest allowable pressure ratio, r, according to § 1065.640.

(10) Use C_d to determine CFV flow during an emission test. Do not use the CFV above the highest allowed r, as determined in § 1065.640.

(11) Verify the calibration by performing a CVS verification (*i.e.*, propane check) as described in § 1065.341.

(12) If your CVS is configured to operate more than one CFV at a time in parallel, calibrate your CVS by one of the following:

(i) Calibrate every combination of CFVs according to this section and § 1065.640. Refer to § 1065.642 for instructions on calculating flow rates for this option.

(ii) Calibrate each CFV according to this section and § 1065.640. Refer to § 1065.642 for instructions on calculating flow rates for this option.

(i) *Ultrasonic flow meter calibration*. [Reserved]

Figure 1 of § 1065.340—CVS calibration configurations.

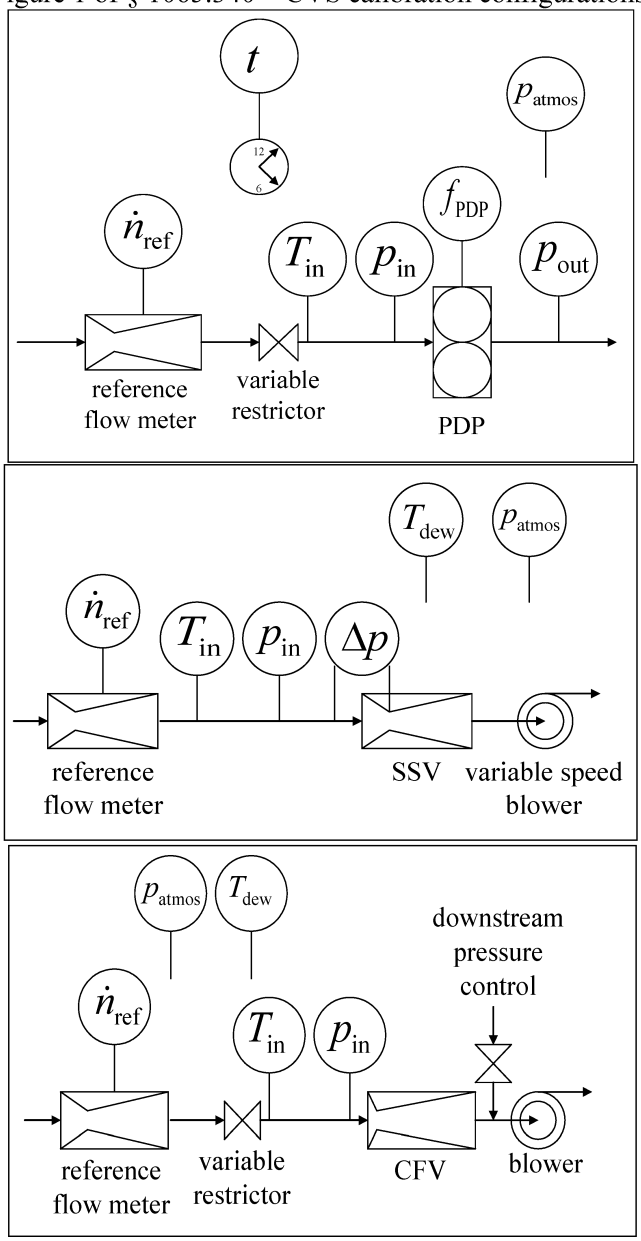

[70 FR 40516, July 13, 2005, as amended at 73 FR 37305, June 30, 2008; 75 FR 68463, Nov. 8, 2010; 76 FR 57445, Sept. 15, 2011; 81 FR 74165, Oct. 25, 2016]

§ 1065.341 CVS, PFD, and batch sampler verification (propane check).

(a) A propane check serves as a CVS verification to determine if there is a discrepancy in measured values of diluted exhaust flow. You may use the same procedure to verify PFDs and batch samplers. For purposes of PFD and batch sampler verification, read the term CVS to mean PFD or batch sampler as appropriate. A propane check also serves as a batch-sampler verification to determine if there is a discrepancy in a batch sampling system that extracts a sample from a CVS, as described in paragraph (g) of this section. Using good engineering judgment and safe practices, this check may be performed using a gas other than propane, such as CO_2 or CO. A failed propane check might indicate one or more problems that may require corrective action, as follows:

(1) *Incorrect analyzer calibration*. Recalibrate, repair, or replace the FID analyzer.

(2) *Leaks*. Inspect CVS tunnel, connections, fasteners, and HC sampling system, and repair or replace components.

(3) *Poor mixing*. Perform the verification as described in this section while traversing a sampling probe across the tunnel's diameter, vertically and horizontally. If the analyzer response indicates any deviation exceeding ±2% of the mean measured concentration, consider operating the CVS at a higher flow rate or installing a mixing plate or orifice to improve mixing.

(4) *Hydrocarbon contamination in the sample system*. Perform the hydrocarbon-contamination verification as described in § 1065.520.

(5) *Change in CVS calibration*. Perform a calibration of the CVS flow meter as described in § 1065.340.

(6) *Flow meter entrance effects*. Inspect the CVS tunnel to determine whether the entrance effects from the piping configuration upstream of the flow meter adversely affect the flow measurement.

(7) *Other problems with the CVS or sampling verification hardware or software*. Inspect the CVS system, CVS verification hardware, and software for discrepancies.

(b) A propane check uses either a reference mass or a reference flow rate of C_3H_8 as a tracer gas in a CVS. Note that if you use a reference flow rate, account for any non-ideal gas behavior of C_3H_8 in the reference flow meter. Refer to § 1065.640 and § 1065.642, which describe how to calibrate and use certain flow meters. Do not use any ideal gas assumptions in § 1065.640 and § 1065.642. The propane check compares the calculated mass of injected C_3H_8 using HC measurements and CVS flow rate measurements with the reference value.

(c) Prepare for the propane check as follows:

(1) If you use a reference mass of C_3H_8 instead of a reference flow rate, obtain a cylinder charged with C_3H_8. Determine the reference cylinder's mass of C_3H_8 within ±0.5% of the amount of C_3H_8 that you expect to use.

(2) Select appropriate flow rates for the CVS and C_3H_8.

(3) Select a C_3H_8 injection port in the CVS. Select the port location to be as close as practical to the location where you introduce engine exhaust into the CVS, or at some point in the laboratory exhaust tubing upstream of this location. Connect the C_3H_8 cylinder to the injection system.

(4) Operate and stabilize the CVS.

(5) Preheat or precool any heat exchangers in the sampling system.

(6) Allow heated and cooled components such as sample lines, filters, chillers, and pumps to stabilize at operating temperature.

(7) You may purge the HC sampling system during stabilization.

(8) If applicable, perform a vacuum side leak verification of the HC sampling system as described in § 1065.345.

(9) You may also conduct any other calibrations or verifications on equipment or analyzers.

(d) If you performed the vacuum-side leak verification of the HC sampling system as described in paragraph (c)(8) of this section, you may use the HC contamination procedure in § 1065.520(f) to verify HC contamination. Otherwise,

zero, span, and verify contamination of the HC sampling system, as follows:

(1) Select the lowest HC analyzer range that can measure the C_3H_8 concentration expected for the CVS and C_3H_8 flow rates.

(2) Zero the HC analyzer using zero air introduced at the analyzer port.

(3) Span the HC analyzer using C_3H_8 span gas introduced at the analyzer port.

(4) Overflow zero air at the HC probe inlet or into a tee near the outlet of the probe.

(5) Measure the stable HC concentration of the HC sampling system as overflow zero air flows. For batch HC measurement, fill the batch container (such as a bag) and measure the HC overflow concentration.

(6) If the overflow HC concentration exceeds 2 μmol/mol, do not proceed until contamination is eliminated. Determine the source of the contamination and take corrective action, such as cleaning the system or replacing contaminated portions.

(7) When the overflow HC concentration does not exceed 2 μmol/mol, record this value as $x_{THCinit}$ and use it to correct for HC contamination as described in §1065.660.

(e) Perform the propane check as follows:

(1) For batch HC sampling, connect clean storage media, such as evacuated bags.

(2) Operate HC measurement instruments according to the instrument manufacturer's instructions.

(3) If you will correct for dilution air background concentrations of HC, measure and record background HC in the dilution air.

(4) Zero any integrating devices.

(5) Begin sampling, and start any flow integrators.

(6) Release the contents of the C_3H_8 reference cylinder at the rate you selected. If you use a reference flow rate of C_3H_8, start integrating this flow rate.

(7) Continue to release the cylinder's contents until at least enough C_3H_8 has been released to ensure accurate quantification of the reference C_3H_8 and the measured C_3H_8.

(8) Shut off the C_3H_8 reference cylinder and continue sampling until you have accounted for time delays due to sample transport and analyzer response.

(9) Stop sampling and stop any integrators.

(f) Perform post-test procedure as follows:

(1) If you used batch sampling, analyze batch samples as soon as practical.

(2) After analyzing HC, correct for contamination and background.

(3) Calculate total C_3H_8 mass based on your CVS and HC data as described in §1065.650 (40 CFR 1066.605 for vehicle testing) and §1065.660, using the molar mass of C_3H_8, M_{C3H8}, instead the effective molar mass of HC, M_{HC}.

(4) If you use a reference mass, determine the cylinder's propane mass within ±0.5% and determine the C_3H_8 reference mass by subtracting the empty cylinder propane mass from the full cylinder propane mass.

(5) Subtract the reference C_3H_8 mass from the calculated mass. If this difference is within ±2% of the reference mass, the CVS passes this verification. If not, take corrective action as described in paragraph (a) of this section.

(g) You may repeat the propane check to verify a batch sampler, such as a PM secondary dilution system. (1) Configure the HC sampling system to extract a sample near the location of the batch sampler's storage media (such as a PM filter). If the absolute pressure at this location is too low to extract an HC sample, you may sample HC from the batch sampler pump's exhaust. Use caution when sampling from pump exhaust because an otherwise acceptable pump leak downstream of a batch sampler flow meter will cause a false failure of the propane check.

(2) Repeat the propane check described in this section, but sample HC from the batch sampler.

(3) Calculate C_3H_8 mass, taking into account any secondary dilution from the batch sampler.

(4) Subtract the reference C_3H_8 mass from the calculated mass. If this difference is within ±5% of the reference mass, the batch sampler passes this

verification. If not, take corrective action as described in paragraph (a) of this section.

[70 FR 40516, July 13, 2005, as amended at 73 FR 37307, June 30, 2008; 73 FR 59328, Oct. 8, 2008; 76 FR 57447, Sept. 15, 2011; 79 FR 23768, Apr. 28, 2014; 81 FR 74167, Oct. 25, 2016]

EFFECTIVE DATE NOTE: At 86 FR 34541, June 29, 2021, § 1065.341 was revised, effective July 29, 2021.

§ 1065.342 Sample dryer verification.

(a) *Scope and frequency*. If you use a sample dryer as allowed in § 1065.145(e)(2) to remove water from the sample gas, verify the performance upon installation, after major maintenance, for thermal chiller. For osmotic membrane dryers, verify the performance upon installation, after major maintenance, and within 35 days of testing.

(b) *Measurement principles*. Water can inhibit an analyzer's ability to properly measure the exhaust component of interest and thus is sometimes removed before the sample gas reaches the analyzer. For example water can negatively interfere with a CLD's NO_X response through collisional quenching and can positively interfere with an NDIR analyzer by causing a response similar to CO.

(c) *System requirements*. The sample dryer must meet the specifications as determined in § 1065.145(e)(2) for dewpoint, T_{dew}, and absolute pressure, p_{total}, downstream of the osmotic-membrane dryer or thermal chiller.

(d) *Sample dryer verification procedure*. Use the following method to determine sample dryer performance. Run this verification with the dryer and associated sampling system operating in the same manner you will use for emission testing (including operation of sample pumps). You may run this verification test on multiple sample dryers sharing the same sampling system at the same time. You may run this verification on the sample dryer alone, but you must use the maximum gas flow rate expected during testing. You may use good engineering judgment to develop a different protocol.

(1) Use PTFE or stainless steel tubing to make necessary connections.

(2) Humidify room air, N_2, or purified air by bubbling it through distilled water in a sealed vessel that humidifies the gas to the highest sample water content that you estimate during emission sampling.

(3) Introduce the humidified gas upstream of the sample dryer. You may disconnect the transfer line from the probe and introduce the humidified gas at the inlet of the transfer line of the sample system used during testing. You may use the sample pumps in the sample system to draw gas through the vessel.

(4) Maintain the sample lines, fittings, and valves from the location where the humidified gas water content is measured to the inlet of the sampling system at a temperature at least 5 °C above the local humidified gas dewpoint. For dryers used in NO_X sample systems, verify the sample system components used in this verification prevent aqueous condensation as required in § 1065.145(d)(1)(i). We recommend that the sample system components be maintained at least 5 °C above the local humidified gas dewpoint to prevent aqueous condensation.

(5) Measure the humidified gas dewpoint, T_{dew}, and absolute pressure, p_{total}, as close as possible to the inlet of the sample dryer or inlet of the sample system to verify the water content is at least as high as the highest value that you estimated during emission sampling. You may verify the water content based on any humidity parameter (e.g. mole fraction water, local dewpoint, or absolute humidity).

(6) Measure the humidified gas dewpoint, T_{dew}, and absolute pressure, p_{total}, as close as possible to the outlet of the sample dryer. Note that the dewpoint changes with absolute pressure. If the dewpoint at the sample dryer outlet is measured at a different pressure, then this reading must be corrected to the dewpoint at the sample dryer absolute pressure, p_{total}.

(7) The sample dryer meets the verification if the dewpoint at the sample dryer pressure as measured in paragraph (d)(6) of this section is less than the dewpoint corresponding to the sample dryer specifications as determined in § 1065.145(e)(2) plus 2 °C or if the mole fraction of water as measured in (d)(6) is less than the corresponding sample dryer specifications plus 0.002 mol/mol.

(e) *Alternate sample dryer verification procedure*. The following method may be used in place of the sample dryer verification procedure in (d) of this section. If you use a humidity sensor for continuous monitoring of dewpoint at the sample dryer outlet you may skip the performance check in §1065.342(d), but you must make sure that the dryer outlet humidity is at or below the minimum value used for quench, interference, and compensation checks.

[73 FR 37307, June 30, 2008, as amended at 73 FR 59328, Oct. 8, 2008; 75 FR 23040, Apr. 30, 2010]

EFFECTIVE DATE NOTE: At 86 FR 34543, June 29, 2021, §1065.342 was amended, effective July 29, 2021.

§1065.345 Vacuum-side leak verification.

(a) *Scope and frequency*. Verify that there are no significant vacuum-side leaks using one of the leak tests described in this section. For laboratory testing, perform the vacuum-side leak verification upon initial sampling system installation, within 8 hours before the start of the first test interval of each duty-cycle sequence, and after maintenance such as pre-filter changes. For field testing, perform the vacuum-side leak verification after each installation of the sampling system on the vehicle, prior to the start of the field test, and after maintenance such as pre-filter changes. This verification does not apply to any full-flow portion of a CVS dilution system.

(b) *Measurement principles*. A leak may be detected either by measuring a small amount of flow when there should be zero flow, or by detecting the dilution of a known concentration of span gas when it flows through the vacuum side of a sampling system.

(c) *Low-flow leak test*. Test a sampling system for low-flow leaks as follows:

(1) Seal the probe end of the system by taking one of the following steps:

(i) Cap or plug the end of the sample probe.

(ii) Disconnect the transfer line at the probe and cap or plug the transfer line.

(iii) Close a leak-tight valve located in the sample transfer line within 92 cm of the probe.

(2) Operate all vacuum pumps. After stabilizing, verify that the flow through the vacuum-side of the sampling system is less than 0.5% of the system's normal in-use flow rate. You may estimate typical analyzer and bypass flows as an approximation of the system's normal in-use flow rate.

(d) *Dilution-of-span-gas leak test*. You may use any gas analyzer for this test. If you use a FID for this test, correct for any HC contamination in the sampling system according to §1065.660. To avoid misleading results from this test, we recommend using only analyzers that have a repeatability of 0.5% or better at the span gas concentration used for this test. Perform a vacuum-side leak test as follows:

(1) Prepare a gas analyzer as you would for emission testing.

(2) Supply span gas to the analyzer span port and record the measured value.

(3) Route overflow span gas to the inlet of the sample probe or at a tee fitting in the transfer line near the exit of the probe. You may use a valve upstream of the overflow fitting to prevent overflow of span gas out of the inlet of the probe, but you must then provide an overflow vent in the overflow supply line.

(4) Verify that the measured overflow span gas concentration is within ±0.5% of the concentration measured in paragraph (d)(2) of this section. A measured value lower than expected indicates a leak, but a value higher than expected may indicate a problem with the span gas or the analyzer itself. A measured value higher than expected does not indicate a leak.

(e) *Vacuum-decay leak test*. To perform this test you must apply a vacuum to the vacuum-side volume of your sampling system and then observe the leak rate of your system as a decay in the applied vacuum. To perform this test you must know the vacuum-side volume of your sampling system to within ±10% of its true volume. For this test you must also use measurement instruments that meet the specifications of subpart C of this part and of this subpart D. Perform a vacuum-decay leak test as follows:

(1) Seal the probe end of the system as close to the probe opening as possible by taking one of the following steps:

(i) Cap or plug the end of the sample probe.

(ii) Disconnect the transfer line at the probe and cap or plug the transfer line.

(iii) Close a leak-tight valve located in the sample transfer line within 92 cm of the probe.

(2) Operate all vacuum pumps. Draw a vacuum that is representative of normal operating conditions. In the case of sample bags, we recommend that you repeat your normal sample bag pump-down procedure twice to minimize any trapped volumes.

(3) Turn off the sample pumps and seal the system. Measure and record the absolute pressure of the trapped gas and optionally the system absolute temperature. Wait long enough for any transients to settle and long enough for a leak at 0.5% to have caused a pressure change of at least 10 times the resolution of the pressure transducer, then again record the pressure and optionally temperature.

(4) Calculate the leak flow rate based on an assumed value of zero for pumped-down bag volumes and based on known values for the sample system volume, the initial and final pressures, optional temperatures, and elapsed time. Using the calculations specified in § 1065.644, verify that the vacuum-decay leak flow rate is less than 0.5% of the system's normal in-use flow rate.

[73 FR 37307, June 30, 2008, as amended at 73 FR 59328, Oct. 8, 2008; 75 FR 23040, Apr. 30, 2010; 81 FR 74167, Oct. 25, 2016]

CO AND CO_2 MEASUREMENTS

§ 1065.350 H_2O interference verification for CO_2 NDIR analyzers.

(a) *Scope and frequency.* If you measure CO_2 using an NDIR analyzer, verify the amount of H_2O interference after initial analyzer installation and after major maintenance.

(b) *Measurement principles.* H_2O can interfere with an NDIR analyzer's response to CO_2.

If the NDIR analyzer uses compensation algorithms that utilize measurements of other gases to meet this interference verification, simultaneously conduct these other measurements to test the compensation algorithms during the analyzer interference verification.

(c) *System requirements.* A CO_2 NDIR analyzer must have an H_2O interference that is within (0.0 ±0.4) mmol/mol, though we strongly recommend a lower interference that is within (0.0 ±0.2) mmol/mol.

(d) *Procedure.* Perform the interference verification as follows:

(1) Start, operate, zero, and span the CO_2 NDIR analyzer as you would before an emission test. If the sample is passed through a dryer during emission testing, you may run this verification test with the dryer if it meets the requirements of § 1065.342. Operate the dryer at the same conditions as you will for an emission test. You may also run this verification test without the sample dryer.

(2) Create a humidified test gas by bubbling zero gas that meets the specifications in § 1065.750 through distilled H_2O in a sealed vessel. If the sample is not passed through a dryer during emission testing, control the vessel temperature to generate an H_2O level at least as high as the maximum expected during emission testing. If the sample is passed through a dryer during emission testing, control the vessel temperature to generate an H_2O level at least as high as the level determined in § 1065.145(e)(2) for that dryer.

(3) Introduce the humidified test gas into the sample system. You may introduce it downstream of any sample dryer, if one is used during testing.

(4) If the sample is not passed through a dryer during this verification test, measure the H_2O mole fraction, x_{H2O}, of the humidified test gas, as close as possible to the inlet of the analyzer. For example, measure dewpoint, T_{dew}, and absolute pressure, p_{total}, to calculate x_{H2O}. Verify that the H_2O content meets the requirement in paragraph (d)(2) of this section. If the sample is passed through a dryer during this verification test, you must verify that the H_2O content of the humidified test gas downstream of the

vessel meets the requirement in paragraph (d)(2) of this section based on either direct measurement of the H_2O content (e.g., dewpoint and pressure) or an estimate based on the vessel pressure and temperature. Use good engineering judgment to estimate the H_2O content. For example, you may use previous direct measurements of H_2O content to verify the vessel's level of saturation.

(5) If a sample dryer is not used in this verification test, use good engineering judgment to prevent condensation in the transfer lines, fittings, or valves from the point where x_{H2O} is measured to the analyzer. We recommend that you design your system so the wall temperatures in the transfer lines, fittings, and valves from the point where x_{H2O} is measured to the analyzer are at least 5 °C above the local sample gas dewpoint.

(6) Allow time for the analyzer response to stabilize. Stabilization time may include time to purge the transfer line and to account for analyzer response.

(7) While the analyzer measures the sample's concentration, record 30 seconds of sampled data. Calculate the arithmetic mean of this data. The analyzer meets the interference verification if this value is within (0.0 ±0.4) mmol/mol.

(e) *Exceptions.* The following exceptions apply:

(1) You may omit this verification if you can show by engineering analysis that for your CO_2 sampling system and your emission-calculation procedures, the H_2O interference for your CO_2 NDIR analyzer always affects your brake-specific emission results within ±0.5% of each of the applicable standards. This specification also applies for vehicle testing, except that it relates to emission results in g/mile or g/kilometer.

(2) You may use a CO_2 NDIR analyzer that you determine does not meet this verification, as long as you try to correct the problem and the measurement deficiency does not adversely affect your ability to show that engines comply with all applicable emission standards.

[70 FR 40516, July 13, 2005, as amended at 73 FR 37308, June 30, 2008; 73 FR 59328, Oct. 8, 2008; 75 FR 23040, Apr. 30, 2010; 76 FR 57447, Sept. 15, 2011; 79 FR 23768, Apr. 28, 2014]

EFFECTIVE DATE NOTE: At 86 FR 34543, June 29, 2021, § 1065.350 was amended, effective July 29, 2021.

§ 1065.355 H_2O and CO_2 interference verification for CO NDIR analyzers.

(a) *Scope and frequency.* If you measure CO using an NDIR analyzer, verify the amount of H_2O and CO_2 interference after initial analyzer installation and after major maintenance.

(b) *Measurement principles.* H_2O and CO_2 can positively interfere with an NDIR analyzer by causing a response similar to CO. If the NDIR analyzer uses compensation algorithms that utilize measurements of other gases to meet this interference verification, simultaneously conduct these other measurements to test the compensation algorithms during the analyzer interference verification.

(c) *System requirements.* A CO NDIR analyzer must have combined H_2O and CO_2 interference that is within ±2 % of the flow-weighted mean concentration of CO expected at the standard, though we strongly recommend a lower interference that is within ±1%.

(d) *Procedure.* Perform the interference verification as follows:

(1) Start, operate, zero, and span the CO NDIR analyzer as you would before an emission test. If the sample is passed through a dryer during emission testing, you may run this verification test with the dryer if it meets the requirements of § 1065.342. Operate the dryer at the same conditions as you will for an emission test. You may also run this verification test without the sample dryer.

(2) Create a humidified CO_2 test gas by bubbling a CO_2 span gas that meets the specifications in § 1065.750 through distilled H_2O in a sealed vessel. If the sample is not passed through a dryer during emission testing, control the vessel temperature to generate an H_2O level at least as high as the maximum expected during emission testing. If the sample is passed through a dryer during emission testing, control the vessel

temperature to generate an H_2O level at least as high as the level determined in §1065.145(e)(2) for that dryer. Use a CO_2 span gas concentration at least as high as the maximum expected during testing.

(3) Introduce the humidified CO_2 test gas into the sample system. You may introduce it downstream of any sample dryer, if one is used during testing.

(4) If the sample is not passed through a dryer during this verification test, measure the H_2O mole fraction, x_{H2O}, of the humidified CO_2 test gas as close as possible to the inlet of the analyzer. For example, measure dewpoint, T_{dew}, and absolute pressure, p_{total}, to calculate x_{H_2O}. Verify that the H_2O content meets the requirement in paragraph (d)(2) of this section. If the sample is passed through a dryer during this verification test, you must verify that the H_2O content of the humidified test gas downstream of the vessel meets the requirement in paragraph (d)(2) of this section based on either direct measurement of the H_2O content (e.g., dewpoint and pressure) or an estimate based on the vessel pressure and temperature. Use good engineering judgment to estimate the H_2O content. For example, you may use previous direct measurements of H_2O content to verify the vessel's level of saturation.

(5) If a sample dryer is not used in this verification test, use good engineering judgment to prevent condensation in the transfer lines, fittings, or valves from the point where x_{H2O} is measured to the analyzer. We recommend that you design your system so that the wall temperatures in the transfer lines, fittings, and valves from the point where x_{H2O} is measured to the analyzer are at least 5 °C above the local sample gas dewpoint.

(6) Allow time for the analyzer response to stabilize. Stabilization time may include time to purge the transfer line and to account for analyzer response.

(7) While the analyzer measures the sample's concentration, record its output for 30 seconds. Calculate the arithmetic mean of this data.

(8) The analyzer meets the interference verification if the result of paragraph (d)(7) of this section meets the tolerance in paragraph (c) of this section.

(9) You may also run interference procedures for CO_2 and H_2O separately. If the CO_2 and H_2O levels used are higher than the maximum levels expected during testing, you may scale down each observed interference value by multiplying the observed interference by the ratio of the maximum expected concentration value to the actual value used during this procedure. You may run separate interference concentrations of H_2O (down to 0.025 mol/mol H_2O content) that are lower than the maximum levels expected during testing, but you must scale up the observed H_2O interference by multiplying the observed interference by the ratio of the maximum expected H_2O concentration value to the actual value used during this procedure. The sum of the two scaled interference values must meet the tolerance in paragraph (c) of this section.

(e) *Exceptions.* The following exceptions apply:

(1) You may omit this verification if you can show by engineering analysis that for your CO sampling system and your emission-calculation procedures, the combined CO_2 and H_2O interference for your CO NDIR analyzer always affects your brake-specific CO emission results within ±0.5% of the applicable CO standard.

(2) You may use a CO NDIR analyzer that you determine does not meet this verification, as long as you try to correct the problem and the measurement deficiency does not adversely affect your ability to show that engines comply with all applicable emission standards.

[70 FR 40516, July 13, 2005, as amended at 73 FR 37308, June 30, 2008; 73 FR 59328, Oct. 8, 2008; 75 FR 23041, Apr. 30, 2010; 79 FR 23769, Apr. 28, 2014]

EFFECTIVE DATE NOTE: At 86 FR 34543, June 29, 2021, §1065.355 was amended, effective July 29, 2021.

HYDROCARBON MEASUREMENTS

§ 1065.360 FID optimization and verification.

(a) *Scope and frequency.* For all FID analyzers, calibrate the FID upon initial installation. Repeat the calibration as needed using good engineering judgment. For a FID that measures THC, perform the following steps:

(1) Optimize the response to various hydrocarbons after initial analyzer installation and after major maintenance as described in paragraph (c) of this section.

(2) Determine the methane (CH_4) response factor after initial analyzer installation and after major maintenance as described in paragraph (d) of this section.

(3) If you determine NMNEHC by subtracting from measured THC, determine the ethane (C_2H_6) response factor after initial analyzer installation and after major maintenance as described in paragraph (f) of this section. Verify the C_2H_6 response within 185 days before testing as described in paragraph (f) of this section.

(b) *Calibration.* Use good engineering judgment to develop a calibration procedure, such as one based on the FID-analyzer manufacturer's instructions and recommended frequency for calibrating the FID. Alternately, you may remove system components for off-site calibration. For a FID that measures THC, calibrate using C_3H_8 calibration gases that meet the specifications of § 1065.750. For a FID that measures CH_4, calibrate using CH_4 calibration gases that meet the specifications of § 1065.750. We recommend FID analyzer zero and span gases that contain approximately the flow-weighted mean concentration of O_2 expected during testing. If you use a FID to measure CH_4 downstream of a nonmethane cutter, you may calibrate that FID using CH_4 calibration gases with the cutter. Regardless of the calibration gas composition, calibrate on a carbon number basis of one (C_1). For example, if you use a C_3H_8 span gas of concentration 200 μmol/mol, span the FID to respond with a value of 600 μmol/mol. As another example, if you use a CH_4 span gas with a concentration of 200 μmol/mol, span the FID to respond with a value of 200 μmol/mol.

(c) *THC FID response optimization.* This procedure is only for FID analyzers that measure THC. Use good engineering judgment for initial instrument start-up and basic operating adjustment using FID fuel and zero air. Heated FIDs must be within their required operating temperature ranges. Optimize FID response at the most common analyzer range expected during emission testing. Optimization involves adjusting flows and pressures of FID fuel, burner air, and sample to minimize response variations to various hydrocarbon species in the exhaust. Use good engineering judgment to trade off peak FID response to propane calibration gases to achieve minimal response variations to different hydrocarbon species. For an example of trading off response to propane for relative responses to other hydrocarbon species, see SAE 770141 (incorporated by reference in § 1065.1010). Determine the optimum flow rates and/or pressures for FID fuel, burner air, and sample and record them for future reference.

(d) *THC FID CH_4 response factor determination.* This procedure is only for FID analyzers that measure THC. Since FID analyzers generally have a different response to CH_4 versus C_3H_8, determine the THC–FID analyzer's CH_4 response factor, $RF_{CH4[THC-FID]}$, after FID optimization. Use the most recent $RF_{CH4[THC-FID]}$ measured according to this section in the calculations for HC determination described in § 1065.660 to compensate for CH_4 response. Determine $RF_{CH4[THC-FID]}$ as follows, noting that you do not determine $RF_{CH4[THC-FID]}$ for FIDs that are calibrated and spanned using CH_4 with a nonmethane cutter:

(1) Select a C_3H_8 span gas concentration that you use to span your analyzers before emission testing. Use only span gases that meet the specifications of § 1065.750. Record the C_3H_8 concentration of the gas.

(2) Select a CH_4 span gas concentration that you use to span your analyzers before emission testing. Use only span gases that meet the specifications of § 1065.750. Record the CH_4 concentration of the gas.

(3) Start and operate the FID analyzer according to the manufacturer's instructions.

(4) Confirm that the FID analyzer has been calibrated using C_3H_8. Calibrate on a carbon number basis of one (C_1). For example, if you use a C_3H_8 span gas of concentration 200 μmol/mol, span the FID to respond with a value of 600 μmol/mol.

(5) Zero the FID with a zero gas that you use for emission testing.

(6) Span the FID with the C_3H_8 span gas that you selected under paragraph (d)(1) of this section.

(7) Introduce the CH_4 span gas that you selected under paragraph (d)(2) of this section into the FID analyzer.

(8) Allow time for the analyzer response to stabilize. Stabilization time may include time to purge the analyzer and to account for its response.

(9) While the analyzer measures the CH_4 concentration, record 30 seconds of sampled data. Calculate the arithmetic mean of these values.

(10) For analyzers with multiple ranges, you need to perform the procedure in this paragraph (d) only on a single range.

(11) Divide the mean measured concentration by the recorded span concentration of the CH_4 calibration gas. The result is the FID analyzer's response factor for CH_4, $RF_{CH4[THC\text{-}FID]}$.

(e) *THC FID CH_4 response verification.* This procedure is only for FID analyzers that measure THC. Verify $RF_{CH4[THC\text{-}FID]}$ as follows:

(1) Perform a CH_4 response factor determination as described in paragraph (d) of this section. If the resulting value of $RF_{CH4[THC\text{-}FID]}$ is within ±5% of its most recent previously determined value, the THC FID passes the CH_4 response verification. For example, if the most recent previous value for $RF_{CH4[THC\text{-}FID]}$ was 1.05 and it increased by 0.05 to become 1.10 or it decreased by 0.05 to become 1.00, either case would be acceptable because ±4.8% is less than ±5%.

(2) If $RF_{CH4[THC\text{-}FID]}$ is not within the tolerance specified in paragraph (e)(1) of this section, use good engineering judgment to verify that the flow rates and/or pressures of FID fuel, burner air, and sample are at their most recent previously recorded values, as determined in paragraph (c) of this section. You may adjust these flow rates as necessary. Then determine the $RF_{CH4[THC\text{-}FID]}$ as described in paragraph (d) of this section and verify that it is within the tolerance specified in this paragraph (e).

(3) If $RF_{CH4[THC\text{-}FID]}$ is not within the tolerance specified in this paragraph (e), re-optimize the FID response as described in paragraph (c) of this section.

(4) Determine a new $RF_{CH4[THC\text{-}FID]}$ as described in paragraph (d) of this section. Use this new value of $RF_{CH4[THC\text{-}FID]}$ in the calculations for HC determination, as described in § 1065.660.

(5) For analyzers with multiple ranges, you need to perform the procedure in this paragraph (e) only on a single range.

(f) *THC FID C_2H_6* response factor determination. This procedure is only for FID analyzers that measure THC. Since FID analyzers generally have a different response to C_2H_6 than C_3H_8, determine the THC–FID analyzer's C_2H_6 response factor, $RF_{C2H6[THC–FID]}$, after FID optimization using the procedure described in paragraph (d) of this section, replacing CH_4 with C_2H_6. Use the most recent $RF_{C2H6[THC–FID]}$ measured according to this section in the calculations for HC determination described in § 1065.660 to compensate for C_2H_6 response.

[73 FR 37308, June 30, 2008, as amended at 75 FR 23041, Apr. 30, 2010; 76 FR 57447, Sept. 15, 2011; 79 FR 23769, Apr. 28, 2014; 81 FR 74168, Oct. 25, 2016]

EFFECTIVE DATE NOTE: At 86 FR 34543, June 29, 2021, § 1065.360 was amended, effective July 29, 2021.

§ 1065.362 Non-stoichiometric raw exhaust FID O_2 interference verification.

(a) *Scope and frequency.* If you use FID analyzers for raw exhaust measurements from engines that operate in a non-stoichiometric mode of combustion (e.g., compression-ignition, lean-burn), verify the amount of FID O_2 interference upon initial installation and after major maintenance.

(b) *Measurement principles.* Changes in O_2 concentration in raw exhaust can affect FID response by changing FID flame temperature. Optimize FID fuel,

burner air, and sample flow to meet this verification. Verify FID performance with the compensation algorithms for FID O_2 interference that you have active during an emission test.

(c) *System requirements.* Any FID analyzer used during testing must meet the FID O_2 interference verification according to the procedure in this section.

(d) *Procedure.* Determine FID O_2 interference as follows, noting that you may use one or more gas dividers to create the reference gas concentrations that are required to perform this verification:

(1) Select three span reference gases that contain a C_3H_8 concentration that you use to span your analyzers before emission testing. Use only span gases that meet the specifications of § 1065.750. You may use CH_4 span reference gases for FIDs calibrated on CH_4 with a nonmethane cutter. Select the three balance gas concentrations such that the concentrations of O_2 and N_2 represent the minimum, maximum, and average O_2 concentrations expected during testing. The requirement for using the average O_2 concentration can be removed if you choose to calibrate the FID with span gas balanced with the average expected oxygen concentration.

(2) Confirm that the FID analyzer meets all the specifications of § 1065.360.

(3) Start and operate the FID analyzer as you would before an emission test. Regardless of the FID burner's air source during testing, use zero air as the FID burner's air source for this verification.

(4) Zero the FID analyzer using the zero gas used during emission testing.

(5) Span the FID analyzer using a span gas that you use during emission testing.

(6) Check the zero response of the FID analyzer using the zero gas used during emission testing. If the mean zero response of 30 seconds of sampled data is within ±0.5% of the span reference value used in paragraph (d)(5) of this section, then proceed to the next step; otherwise restart the procedure at paragraph (d)(4) of this section.

(7) Check the analyzer response using the span gas that has the minimum concentration of O_2 expected during testing. Record the mean response of 30 seconds of stabilized sample data as $x_{O2minHC}$.

(8) Check the zero response of the FID analyzer using the zero gas used during emission testing. If the mean zero response of 30 seconds of stabilized sample data is within ±0.5% of the span reference value used in paragraph (d)(5) of this section, then proceed to the next step; otherwise restart the procedure at paragraph (d)(4) of this section.

(9) Check the analyzer response using the span gas that has the average concentration of O_2 expected during testing. Record the mean response of 30 seconds of stabilized sample data as $x_{O2avgHC}$.

(10) Check the zero response of the FID analyzer using the zero gas used during emission testing. If the mean zero response of 30 seconds of stabilized sample data is within ±0.5% of the span reference value used in paragraph (d)(5) of this section, proceed to the next step; otherwise restart the procedure at paragraph (d)(4) of this section.

(11) Check the analyzer response using the span gas that has the maximum concentration of O_2 expected during testing. Record the mean response of 30 seconds of stabilized sample data as $x_{O2maxHC}$.

(12) Check the zero response of the FID analyzer using the zero gas used during emission testing. If the mean zero response of 30 seconds of stabilized sample data is within ±0.5% of the span reference value used in paragraph (d)(5) of this section, then proceed to the next step; otherwise restart the procedure at paragraph (d)(4) of this section.

(13) Calculate the percent difference between $x_{O2maxHC}$ and its reference gas concentration. Calculate the percent difference between $x_{O2avgHC}$ and its reference gas concentration. Calculate the percent difference between $x_{O2minHC}$ and its reference gas concentration. Determine the maximum percent difference of the three. This is the O_2 interference.

(14) If the O_2 interference is within ±2%, the FID passes the O_2 interference verification; otherwise perform one or more of the following to address the deficiency:

(i) Repeat the verification to determine if a mistake was made during the procedure.

(ii) Select zero and span gases for emission testing that contain higher or lower O_2 concentrations and repeat the verification.

(iii) Adjust FID burner air, fuel, and sample flow rates. Note that if you adjust these flow rates on a THC FID to meet the O_2 interference verification, you have reset RF_{CH4} for the next RF_{CH4} verification according to § 1065.360. Repeat the O_2 interference verification after adjustment and determine RF_{CH4}.

(iv) Repair or replace the FID and repeat the O_2 interference verification.

(v) Demonstrate that the deficiency does not adversely affect your ability to demonstrate compliance with the applicable emission standards.

(15) For analyzers with multiple ranges, you need to perform the procedure in this paragraph (d) only on a single range.

[70 FR 40516, July 13, 2005, as amended at 73 FR 37309, June 30, 2008; 79 FR 23770, Apr. 28, 2014]

§ 1065.365 Nonmethane cutter penetration fractions.

(a) *Scope and frequency*. If you use a FID analyzer and a nonmethane cutter (NMC) to measure methane (CH_4), determine the nonmethane cutter's penetration fractions of CH_4, PF_{CH_4}, and ethane, $PF_{C_2H_6}$. As detailed in this section, these penetration fractions may be determined as a combination of NMC penetration fractions and FID analyzer response factors, depending on your particular NMC and FID analyzer configuration. Perform this verification after installing the nonmethane cutter. Repeat this verification within 185 days of testing to verify that the catalytic activity of the cutter has not deteriorated. Note that because nonmethane cutters can deteriorate rapidly and without warning if they are operated outside of certain ranges of gas concentrations and outside of certain temperature ranges, good engineering judgment may dictate that you determine a nonmethane cutter's penetration fractions more frequently.

(b) *Measurement principles*. A nonmethane cutter is a heated catalyst that removes nonmethane hydrocarbons from an exhaust sample stream before the FID analyzer measures the remaining hydrocarbon concentration. An ideal nonmethane cutter would have a CH_4 penetration fraction, PF_{CH4}, of 1.000, and the penetration fraction for all other nonmethane hydrocarbons would be 0.000, as represented by PF_{C2H6}. The emission calculations in § 1065.660 use the measured values from this verification to account for less than ideal NMC performance.

(c) *System requirements*. We do not limit NMC penetration fractions to a certain range. However, we recommend that you optimize a nonmethane cutter by adjusting its temperature to achieve a $PF_{CH4} > 0.85$ and a $PF_{C2H6} < 0.02$, as determined by paragraphs (d), (e), or (f) of this section, as applicable. If we use a nonmethane cutter for testing, it will meet this recommendation. If adjusting NMC temperature does not result in achieving both of these specifications simultaneously, we recommend that you replace the catalyst material. Use the most recently determined penetration values from this section to calculate HC emissions according to § 1065.660 and § 1065.665 as applicable.

(d) *Procedure for a FID calibrated with the NMC*. The method described in this paragraph (d) is recommended over the procedures specified in paragraphs (e) and (f) of this section. If your FID arrangement is such that a FID is always calibrated to measure CH_4 with the NMC, then span that FID with the NMC using a CH_4 span gas, set the product of that FID's CH_4 response factor and CH_4 penetration fraction, $RFPF_{CH4[NMC\text{-}FID]}$, equal to 1.0 for all emission calculations, and determine its combined ethane (C_2H_6) response factor and penetration fraction, $RFPF_{C2H6[NMC\text{-}FID]}$ as follows:

(1) Select CH_4 and C_2H_6 analytical gas mixtures and ensure that both mixtures meet the specifications of § 1065.750. Select a CH_4 concentration that you would use for spanning the FID during emission testing and select a C_2H_6 concentration that is typical of the peak NMHC concentration expected at the hydrocarbon standard or equal to the THC analyzer's span value. For CH_4 analyzers with multiple ranges,

perform this procedure on the highest range used for emission testing.

(2) Start, operate, and optimize the nonmethane cutter according to the manufacturer's instructions, including any temperature optimization.

(3) Confirm that the FID analyzer meets all the specifications of § 1065.360.

(4) Start and operate the FID analyzer according to the manufacturer's instructions.

(5) Zero and span the FID with the nonmethane cutter as you would during emission testing. Span the FID through the cutter by using CH_4 span gas.

(6) Introduce the C_2H_6 analytical gas mixture upstream of the nonmethane cutter. Use good engineering judgment to address the effect of hydrocarbon contamination if your point of introduction is vastly different from the point of zero/span gas introduction.

(7) Allow time for the analyzer response to stabilize. Stabilization time may include time to purge the nonmethane cutter and to account for the analyzer's response.

(8) While the analyzer measures a stable concentration, record 30 seconds of sampled data. Calculate the arithmetic mean of these data points.

(9) Divide the mean C_2H_6 concentration by the reference concentration of C_2H_6, converted to a C_1 basis. The result is the C_2H_6 combined response factor and penetration fraction, $RFPF_{C2H6[NMC–FID]}$. Use this combined response factor and penetration fraction and the product of the CH_4 response factor and CH_4 penetration fraction, $RFPF_{CH4[NMC–FID]}$, set to 1.0 in emission calculations according to § 1065.660(b)(2)(i), § 1065.660(d)(1)(i), or § 1065.665, as applicable.

(e) *Procedure for a FID calibrated with propane, bypassing the NMC.* If you use a single FID for THC and CH_4 determination with an NMC that is calibrated with propane, C_3H_8, by bypassing the NMC, determine its penetration fractions, $PF_{C2H6[NMC-FID]}$ and $PF_{CH4[NMC-FID]}$, as follows:

(1) Select CH_4 and C_2H_6 analytical gas mixtures and ensure that both mixtures meet the specifications of § 1065.750. Select a CH_4 concentration that you would use for spanning the FID during emission testing and select a C_2H_6 concentration that is typical of the peak NMHC concentration expected at the hydrocarbon standard and the C_2H_6 concentration typical of the peak total hydrocarbon (THC) concentration expected at the hydrocarbon standard or equal to the THC analyzer's span value. For CH_4 analyzers with multiple ranges, perform this procedure on the highest range used for emission testing.

(2) Start and operate the nonmethane cutter according to the manufacturer's instructions, including any temperature optimization.

(3) Confirm that the FID analyzer meets all the specifications of § 1065.360.

(4) Start and operate the FID analyzer according to the manufacturer's instructions.

(5) Zero and span the FID as you would during emission testing. Span the FID by bypassing the cutter and by using C_3H_8 span gas.

(6) Introduce the C_2H_6 analytical gas mixture upstream of the nonmethane cutter. Use good engineering judgment to address the effect of hydrocarbon contamination if your point of introduction is vastly different from the point of zero/span gas introduction.

(7) Allow time for the analyzer response to stabilize. Stabilization time may include time to purge the nonmethane cutter and to account for the analyzer's response.

(8) While the analyzer measures a stable concentration, record 30 seconds of sampled data. Calculate the arithmetic mean of these data points.

(9) Reroute the flow path to bypass the nonmethane cutter, introduce the C_2H_6 analytical gas mixture, and repeat the steps in paragraph (e)(7) through (e)(8) of this section.

(10) Divide the mean C_2H_6 concentration measured through the nonmethane cutter by the mean C_2H_6 concentration measured after bypassing the nonmethane cutter. The result is the C_2H_6 penetration fraction, $PF_{C2H6[NMC–FID]}$. Use this penetration fraction according to § 1065.660(b)(2)(ii), § 1065.660(d)(1)(ii), or § 1065.665, as applicable.

(11) Repeat the steps in paragraphs (e)(6) through (e)(10) of this section, but with the CH_4 analytical gas mixture instead of C_2H_6. The result will be the

CH_4 penetration fraction, $PF_{CH4[NMC-FID]}$. Use this penetration fraction according to §1065.660(b)(2)(ii), §1065.660(c)(1)(ii), or §1065.665, as applicable.

(f) *Procedure for a FID calibrated with CH_4, bypassing the NMC.* If you use a FID with an NMC that is calibrated with CH_4, by bypassing the NMC, determine its combined ethane (C_2H_6) response factor and penetration fraction, $RFPF_{C2H6[NMC-FID]}$, as well as its CH_4 penetration fraction, $PF_{CH4[NMC-FID]}$, as follows:

(1) Select CH_4 and C_2H_6 analytical gas mixtures and ensure that both mixtures meet the specifications of §1065.750. Select a CH_4 concentration that you would use for spanning the FID during emission testing and select a C_2H_6 concentration that is typical of the peak NMHC concentration expected at the hydrocarbon standard or equal to the THC analyzer's span value. For CH_4 analyzers with multiple ranges, perform this procedure on the highest range used for emission testing.

(2) Start and operate the nonmethane cutter according to the manufacturer's instructions, including any temperature optimization.

(3) Confirm that the FID analyzer meets all the specifications of §1065.360.

(4) Start and operate the FID analyzer according to the manufacturer's instructions.

(5) Zero and span the FID as you would during emission testing. Span the FID by bypassing the cutter and by using CH_4 span gas. Note that you must span the FID on a C_1 basis. For example, if your span gas has a methane reference value of 100 μmol/mol, the correct FID response to that span gas is 100 μmol/mol because there is one carbon atom per CH_4 molecule.

(6) Introduce the C_2H_6 analytical gas mixture upstream of the nonmethane cutter. Use good engineering judgment to address the effect of hydrocarbon contamination if your point of introduction is vastly different from the point of zero/span gas introduction.

(7) Allow time for the analyzer response to stabilize. Stabilization time may include time to purge the nonmethane cutter and to account for the analyzer's response.

(8) While the analyzer measures a stable concentration, record 30 seconds of sampled data. Calculate the arithmetic mean of these data points.

(9) Divide the mean C_2H_6 concentration by the reference concentration of C_2H_6, converted to a C_1 basis. The result is the C_2H_6 combined response factor and penetration fraction, $RFPF_{C2H6[NMC-FID]}$. Use this combined response factor and penetration fraction according to §1065.660(b)(2)(iii), §1065.660(d)(1)(iii), or §1065.665, as applicable.

(10) Introduce the CH_4 analytical gas mixture upstream of the nonmethane cutter. Use good engineering judgment to address the effect of hydrocarbon contamination if your point of introduction is vastly different from the point of zero/span gas introduction.

(11) Allow time for the analyzer response to stabilize. Stabilization time may include time to purge the nonmethane cutter and to account for the analyzer's response.

(12) While the analyzer measures a stable concentration, record 30 seconds of sampled data. Calculate the arithmetic mean of these data points.

(13) Reroute the flow path to bypass the nonmethane cutter, introduce the CH_4 analytical gas mixture, and repeat the steps in paragraphs (e)(11) and (12) of this section.

(14) Divide the mean CH_4 concentration measured through the nonmethane cutter by the mean CH_4 concentration measured after bypassing the nonmethane cutter. The result is the CH_4 penetration fraction, $PF_{CH4[NMC-FID]}$. Use this penetration fraction according to §1065.660(b)(2)(iii), §1065.660(d)(1)(iii), or §1065.665, as applicable.

[73 FR 37310, June 30, 2008, as amended at 74 FR 56513, Oct. 30, 2009; 79 FR 23770, Apr. 28, 2014; 81 FR 74168, Oct. 25, 2016]

EFFECTIVE DATE NOTE: At 86 FR 34536, June 29, 2021, §1065.365 was amended, effective July 29, 2021.

§1065.366 Interference verification for FTIR analyzers.

(a) *Scope and frequency.* If you measure CH_4, C_2H_6, NMHC, or NMNEHC using an FTIR analyzer, verify the amount of interference after initial analyzer installation and after major maintenance.

(b) *Measurement principles.* Interference gases can interfere with certain analyzers by causing a response similar to the target analyte. If the analyzer uses compensation algorithms that utilize measurements of other gases to meet this interference verification, simultaneously conduct these other measurements to test the compensation algorithms during the analyzer interference verification.

(c) *System requirements.* An FTIR analyzer must have combined interference that is within ±2% of the flow-weighted mean concentration of CH_4, NMHC, or NMNEHC expected at the standard, though we strongly recommend a lower interference that is within ±1%.

(d) *Procedure.* Perform the interference verification for an FTIR analyzer using the same procedure that applies for N_2O analyzers in § 1065.375(d).

[81 FR 74168, Oct. 25, 2016]

§ 1065.369 H_2O, CO, and CO_2 interference verification for photoacoustic alcohol analyzers.

(a) *Scope and frequency.* If you measure ethanol or methanol using a photoacoustic analyzer, verify the amount of H_2O, CO, and CO_2 interference after initial analyzer installation and after major maintenance.

(b) *Measurement principles.* H_2O, CO, and CO_2 can positively interfere with a photoacoustic analyzer by causing a response similar to ethanol or methanol. If the photoacoustic analyzer uses compensation algorithms that utilize measurements of other gases to meet this interference verification, simultaneously conduct these other measurements to test the compensation algorithms during the analyzer interference verification.

(c) *System requirements.* Photoacoustic analyzers must have combined interference that is within (0.0 ±0.5) μmol/mol. We strongly recommend a lower interference that is within (0.0 ±0.25) μmol/mol.

(d) *Procedure.* Perform the interference verification by following the procedure in § 1065.375(d), comparing the results to paragraph (c) of this section.

[79 FR 23770, Apr. 28, 2014]

NO_X AND N_2O MEASUREMENTS

§ 1065.370 CLD CO_2 and H_2O quench verification.

(a) *Scope and frequency.* If you use a CLD analyzer to measure NO_X, verify the amount of H_2O and CO_2 quench after installing the CLD analyzer and after major maintenance.

(b) *Measurement principles.* H_2O and CO_2 can negatively interfere with a CLD's NO_X response by collisional quenching, which inhibits the chemiluminescent reaction that a CLD utilizes to detect NO_X. This procedure and the calculations in § 1065.675 determine quench and scale the quench results to the maximum mole fraction of H_2O and the maximum CO_2 concentration expected during emission testing. If the CLD analyzer uses quench compensation algorithms that utilize H_2O and/or CO_2 measurement instruments, evaluate quench with these instruments active and evaluate quench with the compensation algorithms applied.

(c) *System requirements.* A CLD analyzer must have a combined H_2O and CO_2 quench of ±2% or less, though we strongly recommend a quench of ±1% or less. Combined quench is the sum of the CO_2 quench determined as described in paragraph (d) of this section, plus the H_2O quench determined in paragraph (e) of this section.

(d) *CO_2 quench verification procedure.* Use the following method to determine CO_2 quench by using a gas divider that blends binary span gases with zero gas as the diluent and meets the specifications in § 1065.248, or use good engineering judgment to develop a different protocol:

(1) Use PTFE or stainless steel tubing to make necessary connections.

(2) Configure the gas divider such that nearly equal amounts of the span and diluent gases are blended with each other.

(3) If the CLD analyzer has an operating mode in which it detects NO-only, as opposed to total NO_X, operate the CLD analyzer in the NO-only operating mode.

(4) Use a CO_2 span gas that meets the specifications of § 1065.750 and a concentration that is approximately twice the maximum CO_2 concentration expected during emission testing.

(5) Use an NO span gas that meets the specifications of § 1065.750 and a concentration that is approximately twice the maximum NO concentration expected during emission testing.

(6) Zero and span the CLD analyzer. Span the CLD analyzer with the NO span gas from paragraph (d)(5) of this section through the gas divider. Connect the NO span gas to the span port of the gas divider; connect a zero gas to the diluent port of the gas divider; use the same nominal blend ratio selected in paragraph (d)(2) of this section; and use the gas divider's output concentration of NO to span the CLD analyzer. Apply gas property corrections as necessary to ensure accurate gas division.

(7) Connect the CO_2 span gas to the span port of the gas divider.

(8) Connect the NO span gas to the diluent port of the gas divider.

(9) While flowing NO and CO_2 through the gas divider, stabilize the output of the gas divider. Determine the CO_2 concentration from the gas divider output, applying gas property correction as necessary to ensure accurate gas division, or measure it using an NDIR. Record this concentration, x_{CO2act}, and use it in the quench verification calculations in § 1065.675. Alternatively, you may use a simple gas blending device and use an NDIR to determine this CO_2 concentration. If you use an NDIR, it must meet the requirements of this part for laboratory testing and you must span it with the CO_2 span gas from paragraph (d)(4) of this section.

(10) Measure the NO concentration downstream of the gas divider with the CLD analyzer. Allow time for the analyzer response to stabilize. Stabilization time may include time to purge the transfer line and to account for analyzer response. While the analyzer measures the sample's concentration, record the analyzer's output for 30 seconds. Calculate the arithmetic mean concentration from these data, x_{NOmeas}. Record x_{NOmeas}, and use it in the quench verification calculations in § 1065.675.

(11) Calculate the actual NO concentration at the gas divider's outlet, x_{NOact}, based on the span gas concentrations and x_{CO2act} according to Eq. 1065.675–2. Use the calculated value in the quench verification calculations in Eq. 1065.675–1.

(12) Use the values recorded according to this paragraph (d) and paragraph (e) of this section to calculate quench as described in § 1065.675.

(e) *H_2O quench verification procedure.* Use the following method to determine H_2O quench, or use good engineering judgment to develop a different protocol:

(1) Use PTFE or stainless steel tubing to make necessary connections.

(2) If the CLD analyzer has an operating mode in which it detects NO-only, as opposed to total NO_X, operate the CLD analyzer in the NO-only operating mode.

(3) Use an NO span gas that meets the specifications of § 1065.750 and a concentration that is near the maximum concentration expected during emission testing.

(4) Zero and span the CLD analyzer. Span the CLD analyzer with the NO span gas from paragraph (e)(3) of this section, record the span gas concentration as x_{NOdry}, and use it in the quench verification calculations in § 1065.675.

(5) Humidify the NO span gas by bubbling it through distilled H_2O in a sealed vessel. If the humidified NO span gas sample does not pass through a sample dryer for this verification test, control the vessel temperature to generate an H_2O level approximately equal to the maximum mole fraction of H_2O expected during emission testing. If the humidified NO span gas sample does not pass through a sample dryer, the quench verification calculations in § 1065.675 scale the measured H_2O quench to the highest mole fraction of H_2O expected during emission testing. If the humidified NO span gas sample passes through a dryer for this verification test, control the vessel temperature to generate an H_2O level at least as high as the level determined in § 1065.145(e)(2). For this case, the quench verification calculations in § 1065.675 do not scale the measured H_2O quench.

(6) Introduce the humidified NO test gas into the sample system. You may introduce it upstream or downstream of any sample dryer that is used during emission testing. Note that the sample dryer must meet the sample dryer verification check in § 1065.342.

(7) Measure the mole fraction of H_2O in the humidified NO span gas downstream of the sample dryer, $x_{H2Omeas}$. We recommend that you measure xH_{2Omeas} as close as possible to the CLD analyzer inlet. You may calculate $x_{H2Omeas}$ from measurements of dew point, T_{dew}, and absolute pressure, $p$total.

(8) Use good engineering judgment to prevent condensation in the transfer lines, fittings, or valves from the point where $x_{H2Omeas}$ is measured to the analyzer. We recommend that you design your system so the wall temperatures in the transfer lines, fittings, and valves from the point where $x_{H2Omeas}$ is measured to the analyzer are at least 5 °C above the local sample gas dew point.

(9) Measure the humidified NO span gas concentration with the CLD analyzer. Allow time for the analyzer response to stabilize. Stabilization time may include time to purge the transfer line and to account for analyzer response. While the analyzer measures the sample's concentration, record the analyzer's output for 30 seconds. Calculate the arithmetic mean of these data, x_{NOwet}. Record x_{NOwet} and use it in the quench verification calculations in § 1065.675.

(f) *Corrective action*. If the sum of the H_2O quench plus the CO_2 quench is less than −2% or greater than + 2%, take corrective action by repairing or replacing the analyzer. Before running emission tests, verify that the corrective action successfully restored the analyzer to proper functioning.

(g) *Exceptions*. The following exceptions apply:

(1) You may omit this verification if you can show by engineering analysis that for your NO_X sampling system and your emission calculation procedures, the combined CO_2 and H_2O interference for your NO_X CLD analyzer always affects your brake-specific NO_X emission results within no more than ±1% of the applicable NO_X standard. If you certify to a combined emission standard (such as a NO_X + NMHC standard), scale your NO_X results to the combined standard based on the measured results (after incorporating deterioration factors, if applicable). For example, if your final NO_X + NMHC value is half of the emission standard, double the NO_X result to estimate the level of NO_X emissions corresponding to the applicable standard.

(2) You may use a NO_X CLD analyzer that you determine does not meet this verification, as long as you try to correct the problem and the measurement deficiency does not adversely affect your ability to show that engines comply with all applicable emission standards.

[73 FR 59328, Oct. 8, 2008, as amended at 73 FR 73789, Dec. 4, 2008; 75 FR 23041, Apr. 30, 2010; 76 FR 57447, Sept. 15, 2011; 79 FR 23771, Apr. 28, 2014; 81 FR 74168, Oct. 25, 2016]

EFFECTIVE DATE NOTE: At 86 FR 34545, June 29, 2021, § 1065.370 was amended, effective July 29, 2021.

§ 1065.372 NDUV analyzer HC and H_2O interference verification.

(a) *Scope and frequency*. If you measure NO_X using an NDUV analyzer, verify the amount of H_2O and hydrocarbon interference after initial analyzer installation and after major maintenance.

(b) *Measurement principles*. Hydrocarbons and H_2O can positively interfere with an NDUV analyzer by causing a response similar to NO_X. If the NDUV analyzer uses compensation algorithms that utilize measurements of other gases to meet this interference verification, simultaneously conduct such measurements to test the algorithms during the analyzer interference verification.

(c) *System requirements*. A NO_X NDUV analyzer must have combined H_2O and HC interference within ±2% of the flow-weighted mean concentration of NO_X expected at the standard, though we strongly recommend keeping interference within ±1%.

(d) *Procedure*. Perform the interference verification as follows:

(1) Start, operate, zero, and span the NO_X NDUV analyzer according to the instrument manufacturer's instructions.

(2) We recommend that you extract engine exhaust to perform this verification. Use a CLD that meets the specifications of subpart C of this part to quantify NO_X in the exhaust. Use the CLD response as the reference value. Also measure HC in the exhaust with a

FID analyzer that meets the specifications of subpart C of this part. Use the FID response as the reference hydrocarbon value.

(3) Upstream of any sample dryer, if one is used during testing, introduce the engine exhaust to the NDUV analyzer.

(4) Allow time for the analyzer response to stabilize. Stabilization time may include time to purge the transfer line and to account for analyzer response.

(5) While all analyzers measure the sample's concentration, record 30 seconds of sampled data, and calculate the arithmetic means for the three analyzers.

(6) Subtract the CLD mean from the NDUV mean.

(7) Multiply this difference by the ratio of the flow-weighted mean HC concentration expected at the standard to the HC concentration measured during the verification. The analyzer meets the interference verification of this section if this result is within ±2% of the NO_X concentration expected at the standard.

(e) *Exceptions*. The following exceptions apply:

(1) You may omit this verification if you can show by engineering analysis that for your NO_X sampling system and your emission calculation procedures, the combined HC and H_2O interference for your NO_X NDUV analyzer always affects your brake-specific NO_X emission results by less than 0.5% of the applicable NO_X standard.

[70 FR 40516, July 13, 2005, as amended at 73 FR 37312, June 30, 2008; 76 FR 57447, Sept. 15, 2011]

§ 1065.375 Interference verification for N_2O analyzers.

(a) *Scope and frequency*. See § 1065.275 to determine whether you need to verify the amount of interference after initial analyzer installation and after major maintenance.

(b) *Measurement principles*. Interference gases can positively interfere with certain analyzers by causing a response similar to N_2O. If the analyzer uses compensation algorithms that utilize measurements of other gases to meet this interference verification, simultaneously conduct these other measurements to test the compensation algorithms during the analyzer interference verification.

(c) *System requirements*. Analyzers must have combined interference that is within (0.0 ±1.0) μmol/mol. We strongly recommend a lower interference that is within (0.0 ±0.5) μmol/mol.

(d) *Procedure*. Perform the interference verification as follows:

(1) Start, operate, zero, and span the N_2O analyzer as you would before an emission test. If the sample is passed through a dryer during emission testing, you may run this verification test with the dryer if it meets the requirements of § 1065.342. Operate the dryer at the same conditions as you will for an emission test. You may also run this verification test without the sample dryer.

(2) Create a humidified test gas by bubbling a multi component span gas that incorporates the target interference species and meets the specifications in § 1065.750 through distilled H_2O in a sealed vessel. If the sample is not passed through a dryer during emission testing, control the vessel temperature to generate an H_2O level at least as high as the maximum expected during emission testing. If the sample is passed through a dryer during emission testing, control the vessel temperature to generate an H_2O level at least as high as the level determined in § 1065.145(e)(2) for that dryer. Use interference span gas concentrations that are at least as high as the maximum expected during testing.

(3) Introduce the humidified interference test gas into the sample system. You may introduce it downstream of any sample dryer, if one is used during testing.

(4) If the sample is not passed through a dryer during this verification test, measure the H_2O mole fraction, x_{H_2O}, of the humidified interference test gas as close as possible to the inlet of the analyzer. For example, measure dewpoint, T_{dew}, and absolute pressure, p_{total}, to calculate x_{H_2O}. Verify that the H_2O content meets the requirement in paragraph (d)(2) of this section. If the sample is passed through a dryer during this verification test, you must verify that the H_2O content of the humidified test gas downstream

of the vessel meets the requirement in paragraph (d)(2) of this section based on either direct measurement of the H_2O content (e.g., dewpoint and pressure) or an estimate based on the vessel pressure and temperature. Use good engineering judgment to estimate the H_2O content. For example, you may use previous direct measurements of H_2O content to verify the vessel's level of saturation.

(5) If a sample dryer is not used in this verification test, use good engineering judgment to prevent condensation in the transfer lines, fittings, or valves from the point where x_{H_2O} is measured to the analyzer. We recommend that you design your system so that the wall temperatures in the transfer lines, fittings, and valves from the point where x_{H_2O} is measured to the analyzer are at least 5 °C above the local sample gas dewpoint.

(6) Allow time for the analyzer response to stabilize. Stabilization time may include time to purge the transfer line and to account for analyzer response.

(7) While the analyzer measures the sample's concentration, record its output for 30 seconds. Calculate the arithmetic mean of this data. When performed with all the gases simultaneously, this is the combined interference.

(8) The analyzer meets the interference verification if the result of paragraph (d)(7) of this section meets the tolerance in paragraph (c) of this section.

(9) You may also run interference procedures separately for individual interference gases. If the interference gas levels used are higher than the maximum levels expected during testing, you may scale down each observed interference value (the arithmetic mean of 30 second data described in paragraph (d)(7) of this section) by multiplying the observed interference by the ratio of the maximum expected concentration value to the actual value used during this procedure. You may run separate interference concentrations of H_2O (down to 0.025 mol/mol H_2O content) that are lower than the maximum levels expected during testing, but you must scale up the observed H_2O interference by multiplying the observed interference by the ratio of the maximum expected H_2O concentration value to the actual value used during this procedure. The sum of the scaled interference values must meet the tolerance for combined interference as specified in paragraph (c) of this section.

[74 FR 56515, Oct. 30, 2009, as amended at 23771, Apr. 28, 2014; 81 FR 74168, Oct. 25, 2016]

EFFECTIVE DATE NOTE: At 86 FR 34545, June 29, 2021, § 1065.375 was amended, effective July 29, 2021.

§ 1065.376 Chiller NO_2 penetration.

(a) *Scope and frequency.* If you use a chiller to dry a sample upstream of a NO_X measurement instrument, but you don't use an NO_2-to-NO converter upstream of the chiller, you must perform this verification for chiller NO_2 penetration. Perform this verification after initial installation and after major maintenance.

(b) *Measurement principles.* A chiller removes H_2O, which can otherwise interfere with a NO_X measurement. However, liquid H_2O remaining in an improperly designed chiller can remove NO_2 from the sample. If a chiller is used without an NO_2-to-NO converter upstream, it could remove NO_2 from the sample prior NO_X measurement.

(c) *System requirements.* A chiller must allow for measuring at least 95% of the total NO_2 at the maximum expected concentration of NO_2.

(d) *Procedure.* Use the following procedure to verify chiller performance:

(1) *Instrument setup.* Follow the analyzer and chiller manufacturers' start-up and operating instructions. Adjust the analyzer and chiller as needed to optimize performance.

(2) *Equipment setup and data collection.* (i) Zero and span the total NO_X gas analyzer(s) as you would before emission testing.

(ii) Select an NO_2 calibration gas, balance gas of dry air, that has an NO_2 concentration within ±5% of the maximum NO_2 concentration expected during testing.

(iii) Overflow this calibration gas at the gas sampling system's probe or overflow fitting. Allow for stabilization of the total NO_X response, accounting only for transport delays and instrument response.

(iv) Calculate the mean of 30 seconds of recorded total NO_X data and record this value as x_{NOXref}.

(v) Stop flowing the NO_2 calibration gas.

(vi) Next saturate the sampling system by overflowing a dewpoint generator's output, set at a dewpoint of 50 °C, to the gas sampling system's probe or overflow fitting. Sample the dewpoint generator's output through the sampling system and chiller for at least 10 minutes until the chiller is expected to be removing a constant rate of H_2O.

(vii) Immediately switch back to overflowing the NO_2 calibration gas used to establish x_{NOxref}. Allow for stabilization of the total NO_X response, accounting only for transport delays and instrument response. Calculate the mean of 30 seconds of recorded total NO_X data and record this value as $x_{NOxmeas}$.

(viii) Correct $x_{NOxmeas}$ to x_{NOxdry} based upon the residual H_2O vapor that passed through the chiller at the chiller's outlet temperature and pressure.

(3) *Performance evaluation.* If x_{NOxdry} is less than 95% of x_{NOxref}, repair or replace the chiller.

(e) *Exceptions.* The following exceptions apply:

(1) You may omit this verification if you can show by engineering analysis that for your NO_X sampling system and your emission calculations procedures, the chiller always affects your brake-specific NO_X emission results by less than 0.5% of the applicable NO_X standard.

(2) You may use a chiller that you determine does not meet this verification, as long as you try to correct the problem and the measurement deficiency does not adversely affect your ability to show that engines comply with all applicable emission standards.

[73 FR 37312, June 30, 2008, as amended at 79 FR 23771, Apr. 28, 2014]

§ 1065.378 NO_2-to-NO converter conversion verification.

(a) *Scope and frequency.* If you use an analyzer that measures only NO to determine NO_X, you must use an NO_2-to-NO converter upstream of the analyzer. Perform this verification after installing the converter, after major maintenance and within 35 days before an emission test. This verification must be repeated at this frequency to verify that the catalytic activity of the NO_2-to-NO converter has not deteriorated.

(b) *Measurement principles.* An NO_2-to-NO converter allows an analyzer that measures only NO to determine total NO_X by converting the NO_2 in exhaust to NO.

(c) *System requirements.* An NO_2-to-NO converter must allow for measuring at least 95% of the total NO_2 at the maximum expected concentration of NO_2.

(d) *Procedure.* Use the following procedure to verify the performance of a NO_2-to-NO converter:

(1) *Instrument setup.* Follow the analyzer and NO_2-to-NO converter manufacturers' start-up and operating instructions. Adjust the analyzer and converter as needed to optimize performance.

(2) *Equipment setup.* Connect an ozonator's inlet to a zero-air or oxygen source and connect its outlet to one port of a three-way tee fitting. Connect an NO span gas to another port, and connect the NO_2-to-NO converter inlet to the last port.

(3) *Adjustments and data collection.* Perform this check as follows:

(i) Set ozonator air off, turn ozonator power off, and set the analyzer to NO mode. Allow for stabilization, accounting only for transport delays and instrument response.

(ii) Use an NO concentration that is representative of the peak total NO_X concentration expected during testing. The NO_2 content of the gas mixture shall be less than 5% of the NO concentration. Record the concentration of NO by calculating the mean of 30 seconds of sampled data from the analyzer and record this value as x_{NOref}.

(iii) Turn on the ozonator O_2 supply and adjust the O_2 flow rate so the NO indicated by the analyzer is about 10 percent less than x_{NOref}. Record the concentration of NO by calculating the mean of 30 seconds of sampled data from the analyzer and record this value as $x_{NO+O2mix}$.

(iv) Switch the ozonator on and adjust the ozone generation rate so the NO measured by the analyzer is 20 percent of x_{NOref} or a value which would

simulate the maximum concentration of NO_2 expected during testing, while maintaining at least 10 percent unreacted NO. This ensures that the ozonator is generating NO_2 at the maximum concentration expected during testing. Record the concentration of NO by calculating the mean of 30 seconds of sampled data from the analyzer and record this value as x_{NOmeas}.

(v) Switch the NO_X analyzer to NO_X mode and measure total NO_X. Record the concentration of NO_X by calculating the mean of 30 seconds of sampled data from the analyzer and record this value as $x_{NOxmeas}$.

(vi) Switch off the ozonator but maintain gas flow through the system. The NO_X analyzer will indicate the NO_X in the NO + O_2 mixture. Record the concentration of NO_X by calculating the mean of 30 seconds of sampled data from the analyzer and record this value as $x_{NOx+O2mix}$.

(vii) Turn off the ozonator O_2 supply. The NO_X analyzer will indicate the NO_X in the original NO-in-N_2 mixture. Record the concentration of NO_X by calculating the mean of 30 seconds of sampled data from the analyzer and record this value as x_{NOxref}. This value should be no more than 5 percent above the x_{NOref} value.

(4) *Performance evaluation.* Calculate the efficiency of the NO_X converter by substituting the concentrations obtained into the following equation:

$$efficiency = \left(1 + \frac{x_{NOxmeas} - x_{NOx+O2mix}}{x_{NO+O2mix} - x_{NOmeas}}\right) \cdot 100\%$$

(5) If the result is less than 95%, repair or replace the NO_2-to-NO converter.

(e) *Exceptions.* The following exceptions apply:

(1) You may omit this verification if you can show by engineering analysis that for your NO_X sampling system and your emission calculations procedures, the converter always affects your brake-specific NO_X emission results by less than 0.5% of the applicable NO_X standard.

[70 FR 40516, July 13, 2005, as amended at 73 FR 37313, June 30, 2008; 73 FR 59330, Oct. 8, 2008; 76 FR 57447, Sept. 15, 2011]

PM MEASUREMENTS

§ 1065.390 PM balance verifications and weighing process verification.

(a) *Scope and frequency.* This section describes three verifications.

(1) Independent verification of PM balance performance within 370 days before weighing any filter.

(2) Zero and span the balance within 12 h before weighing any filter.

(3) Verify that the mass determination of reference filters before and after a filter weighing session are less than a specified tolerance.

(b) *Independent verification.* Have the balance manufacturer (or a representative approved by the balance manufacturer) verify the balance performance within 370 days of testing. Balances have internal weights that compensate for drift due to environmental changes. These internal weights must be verified as part of this independent verification with external, certified calibration weights that meet the specifications in § 1065.790.

(c) *Zeroing and spanning.* You must verify balance performance by zeroing and spanning it with at least one calibration weight. Also, any external weights you use must meet the specifications in § 1065.790. Any weights internal to the PM balance used for this verification must be verified as described in paragraph (b) of this section.

(1) Use a manual procedure in which you zero the balance and span the balance with at least one calibration weight. If you normally use mean values by repeating the weighing process to improve the accuracy and precision of PM measurements, use the same process to verify balance performance.

(2) You may use an automated procedure to verify balance performance.

For example most balances have internal weights for automatically verifying balance performance.

(d) *Reference sample weighing*. Verify all mass readings during a weighing session by weighing reference PM sample media (e.g., filters) before and after a weighing session. A weighing session may be as short as desired, but no longer than 80 hours, and may include both pre-test and post-test mass readings. We recommend that weighing sessions be eight hours or less. Successive mass determinations of each reference PM sample media (e.g., filter) must return the same value within ±10 μg or ±10% of the net PM mass expected at the standard (if known), whichever is higher. If successive reference PM sample media (e.g., filter) weighing events fail this criterion, invalidate all individual test media (e.g., filter) mass readings occurring between the successive reference media (e.g., filter) mass determinations. You may reweigh these media (e.g., filter) in another weighing session. If you invalidate a pre-test media (e.g., filter) mass determination, that test interval is void. Perform this verification as follows:

(1) Keep at least two samples of unused PM sample media (e.g., filters) in the PM-stabilization environment. Use these as references. If you collect PM with filters, select unused filters of the same material and size for use as references. You may periodically replace references, using good engineering judgment.

(2) Stabilize references in the PM stabilization environment. Consider references stabilized if they have been in the PM-stabilization environment for a minimum of 30 min, and the PM-stabilization environment has been within the specifications of §1065.190(d) for at least the preceding 60 min.

(3) Exercise the balance several times with a reference sample. We recommend weighing ten samples without recording the values.

(4) Zero and span the balance. Using good engineering judgment, place a test mass such as a calibration weight on the balance, then remove it. After spanning, confirm that the balance returns to a zero reading within the normal stabilization time.

(5) Weigh each of the reference media (e.g., filters) and record their masses. We recommend using substitution weighing as described in §1065.590(j). If you normally use mean values by repeating the weighing process to improve the accuracy and precision of the reference media (e.g., filter) mass, you must use mean values of sample media (e.g., filter) masses.

(6) Record the balance environment dewpoint, ambient temperature, and atmospheric pressure.

(7) Use the recorded ambient conditions to correct results for buoyancy as described in §1065.690. Record the buoyancy-corrected mass of each of the references.

(8) Subtract each reference media's (e.g., filter's) buoyancy-corrected reference mass from its previously measured and recorded buoyancy-corrected mass.

(9) If any of the reference filters' observed mass changes by more than that allowed under this paragraph, you must invalidate all PM mass determinations made since the last successful reference media (*e.g.* filter) mass validation. You may discard reference PM media (*e.g.* filters) if only one of the filter's mass changes by more than the allowable amount and you can positively identify a special cause for that filter's mass change that would not have affected other in-process filters. Thus, the validation can be considered a success. In this case, you do not have to include the contaminated reference media when determining compliance with paragraph (d)(10) of this section, but the affected reference filter must be immediately discarded and replaced prior to the next weighing session.

(10) If any of the reference masses change by more than that allowed under this paragraph (d), invalidate all PM results that were determined between the two times that the reference masses were determined. If you discarded reference PM sample media according to paragraph (d)(9) of this section, you must still have at least one reference mass difference that meets the criteria in this paragraph (d). Otherwise, you must invalidate all PM results that were determined between the

two times that the reference media (e.g., filters) masses were determined.

[73 FR 37313, June 30, 2008, as amended at 75 FR 23042, Apr. 30, 2010; 75 FR 68463, Nov. 8, 2010; 81 FR 74168, Oct. 25, 2016]

§ 1065.395 Inertial PM balance verifications.

This section describes how to verify the performance of an inertial PM balance.

(a) *Independent verification.* Have the balance manufacturer (or a representative approved by the balance manufacturer) verify the inertial balance performance within 370 days before testing.

(b) *Other verifications.* Perform other verifications using good engineering judgment and instrument manufacturer recommendations.

Subpart E—Engine Selection, Preparation, and Maintenance

§ 1065.401 Test engine selection.

While all engine configurations within a certified engine family must comply with the applicable standards in the standard-setting part, you need not test each configuration for certification.

(a) Select an engine configuration within the engine family for testing, as follows:

(1) Test the engine that we specify, whether we issue general guidance or give you specific instructions.

(2) If we do not tell you which engine to test, follow any instructions in the standard-setting part.

(3) If we do not tell you which engine to test and the standard-setting part does not include specifications for selecting test engines, use good engineering judgment to select the engine configuration within the engine family that is most likely to exceed an emission standard.

(b) In the absence of other information, the following characteristics are appropriate to consider when selecting the engine to test:

(1) Maximum fueling rates.

(2) Maximum loads.

(3) Maximum in-use speeds.

(4) Highest sales volume.

(c) For our testing, we may select any engine configuration within the engine family.

§ 1065.405 Test engine preparation and maintenance.

This part 1065 describes how to test engines for a variety of purposes, including certification testing, production-line testing, and in-use testing. Depending on which type of testing is being conducted, different preparation and maintenance requirements apply for the test engine.

(a) If you are testing an emission-data engine for certification, make sure it is built to represent production engines, consistent with paragraph (f) of this section. This includes governors that you normally install on production engines. Production engines should also be tested with their installed governors. If your engine is equipped with multiple user-selectable governor types and if the governor does not manipulate the emission control system (i.e., the governor only modulates an ''operator demand'' signal such as commanded fuel rate, torque, or power), choose the governor type that allows the test cell to most accurately follow the duty cycle. If the governor manipulates the emission control system, treat it as an adjustable parameter. See paragraph (b) of this section for guidance on setting adjustable parameters. If you do not install governors on production engines, simulate a governor that is representative of a governor that others will install on your production engines. In certain circumstances, you may incorporate test cell components to simulate an in-use configuration, consistent with good engineering judgment. For example, §§ 1065.122 and 1065.125 allow the use of test cell components to represent engine cooling and intake air systems. The provisions in § 1065.110(e) also apply to emission-data engines for certification.

(b) We may set adjustable parameters to any value in the valid range, and you are responsible for controlling emissions over the full valid range. For each adjustable parameter, if the standard-setting part has no unique requirements and if we have not specified a value, use good engineering judgment

to select the most common setting. If information on the most common setting is not available, select the setting representing the engine's original shipped configuration. If information on the most common and original settings is not available, set the adjustable parameter in the middle of the valid range.

(c) Testing generally occurs only after the test engine has undergone a stabilization step (or in-use operation). If the engine has not already been stabilized, run the test engine, with all emission control systems operating, long enough to stabilize emission levels. Note that you must generally use the same stabilization procedures for emission-data engines for which you apply the same deterioration factors so low-hour emission-data engines are consistent with the low-hour engine used to develop the deterioration factor.

(1) Unless otherwise specified in the standard-setting part, you may consider emission levels stable without measurement after 50 h of operation. If the engine needs less operation to stabilize emission levels, record your reasons and the methods for doing this, and give us these records if we ask for them. If the engine will be tested for certification as a low-hour engine, see the standard-setting part for limits on testing engines to establish low-hour emission levels.

(2) You may stabilize emissions from a catalytic exhaust aftertreatment device by operating it on a different engine, consistent with good engineering judgment. Note that good engineering judgment requires that you consider both the purpose of the test and how your stabilization method will affect the development and application of deterioration factors. For example, this method of stabilization is generally not appropriate for production engines. We may also allow you to stabilize emissions from a catalytic exhaust aftertreatment device by operating it on an engine-exhaust simulator.

(d) Record any maintenance, modifications, parts changes, diagnostic or emissions testing and document the need for each event. You must provide this information if we request it.

(e) For accumulating operating hours on your test engines, select engine operation that represents normal in-use operation for the engine family.

(f) If your engine will be used in a vehicle equipped with a canister for storing evaporative hydrocarbons for eventual combustion in the engine and the test sequence involves a cold-start or hot-start duty cycle, attach a canister to the engine before running an emission test. You may omit using an evaporative canister for any hot-stabilized duty cycles. You may request to omit using an evaporative canister during testing if you can show that it would not affect your ability to show compliance with the applicable emission standards. You may operate the engine without an installed canister for service accumulation. Prior to an emission test, use the following steps to precondition a canister and attach it to your engine:

(1) Use a canister and plumbing arrangement that represents the in-use configuration of the largest capacity canister in all expected applications.

(2) Precondition the canister as described in 40 CFR 86.132–96(j).

(3) Connect the canister's purge port to the engine.

(4) Plug the canister port that is normally connected to the fuel tank.

(g) This paragraph (g) defines the components that are considered to be part of the engine for laboratory testing. See §1065.110 for provisions related to system boundaries with respect to work inputs and outputs.

(1) This paragraph (g)(1) describes certain criteria for considering a component to be part of the test engine. The criteria are intended to apply broadly, such that a component would generally be considered part of the engine in cases of uncertainty. Except as specified in paragraph (g)(2) of this section, an engine-related component meeting both the following criteria is considered to be part of the test engine for purposes of testing and for stabilizing emission levels, preconditioning, and measuring emission levels:

(i) The component directly affects the functioning of the engine, is related to controlling emissions, or

transmits engine power. This would include engine cooling systems, engine controls, and transmissions.

(ii) The component is covered by the applicable certificate of conformity. For example, this criterion would typically exclude radiators not described in an application for certification.

(2) This paragraph (g)(2) applies for engine-related components that meet the criteria of paragraph (g)(1) of this section, but that are part of the laboratory setup or are used for other engines. Such components are considered to be part of the test engine for preconditioning, but not for engine stabilization. For example, if you test your engines using the same laboratory exhaust tubing for all tests, there would be no restrictions on the number of test hours that could be accumulated with the tubing, but it would need to be preconditioned separately for each engine.

[79 FR 23772, Apr. 28, 2014]

§ 1065.410 Maintenance limits for stabilized test engines.

(a) After you stabilize the test engine's emission levels, you may do maintenance as allowed by the standard-setting part. However, you may not do any maintenance based on emission measurements from the test engine (i.e., unscheduled maintenance).

(b) For any critical emission-related maintenance—other than what we specifically allow in the standard-setting part—you must completely test an engine for emissions before and after doing any maintenance that might affect emissions, unless we waive this requirement.

(c) If you inspect an engine, keep a record of the inspection and update your application to document any changes that result. You may use any kind of equipment, instrument, or tool to identify bad engine components or perform maintenance if it is available at dealerships and other service outlets.

(d) If we determine that a part failure, system malfunction, or associated repairs have made the engine's emission controls unrepresentative of production engines, you may no longer use it as an emission-data engine. Also, if your test engine has a major mechanical failure that requires you to take it apart, you may no longer use it as an emission-data engine.

[70 FR 40516, July 13, 2005, as amended at 73 FR 37314, June 30, 2008; 79 FR 23773, Apr. 28, 2014; 80 FR 9118, Feb. 19, 2015]

EFFECTIVE DATE NOTE: At 86 FR 34545, June 29, 2021, § 1065.410 was amended, effective July 29, 2021.

§ 1065.415 Durability demonstration.

If the standard-setting part requires durability testing, you must accumulate service in a way that represents how you expect the engine to operate in use. You may accumulate service hours using an accelerated schedule, such as through continuous operation or by using duty cycles that are more aggressive than in-use operation, subject to any pre-approval requirements established in the applicable standard-setting part.

(a) *Maintenance.* The following limits apply to the maintenance that we allow you to do on an emission-data engine:

(1) You may perform scheduled maintenance that you recommend to operators, but only if it is consistent with the standard-setting part's restrictions.

(2) You may perform additional maintenance only as specified in § 1065.410 or allowed by the standard-setting part.

(b) *Emission measurements.* Perform emission tests following the provisions of the standard setting part and this part, as applicable. Perform emission tests to determine deterioration factors consistent with good engineering judgment. Evenly space any tests between the first and last test points throughout the durability period, unless we approve otherwise.

[70 FR 40516, July 13, 2005, as amended at 73 FR 37315, June 30, 2008]

Subpart F—Performing an Emission Test Over Specified Duty Cycles

§ 1065.501 Overview.

(a) Use the procedures detailed in this subpart to measure engine emissions over a specified duty cycle. Refer to subpart J of this part for field test

procedures that describe how to measure emissions during in-use engine operation. This section describes how to:

(1) Map your engine, if applicable, by recording specified speed and torque data, as measured from the engine's primary output shaft.

(2) Transform normalized duty cycles into reference duty cycles for your engine by using an engine map.

(3) Prepare your engine, equipment, and measurement instruments for an emission test.

(4) Perform pre-test procedures to verify proper operation of certain equipment and analyzers.

(5) Record pre-test data.

(6) Start or restart the engine and sampling systems.

(7) Sample emissions throughout the duty cycle.

(8) Record post-test data.

(9) Perform post-test procedures to verify proper operation of certain equipment and analyzers.

(10) Weigh PM samples.

(b) Unless we specify otherwise, you may control the regeneration timing of infrequently regenerated aftertreatment devices such as diesel particulate filters using good engineering judgment. You may control the regeneration timing using a sequence of engine operating conditions or you may initiate regeneration with an external regeneration switch or other command. This provision also allows you to ensure that a regeneration event does not occur during an emission test.

(c) An emission test generally consists of measuring emissions and other parameters while an engine follows one or more duty cycles that are specified in the standard-setting part. There are two general types of duty cycles:

(1) *Transient cycles.* Transient duty cycles are typically specified in the standard-setting part as a second-by-second sequence of speed commands and normalized torque (or power) commands. Operate an engine over a transient cycle such that the speed and torque of the engine's primary output shaft follows the target values. Proportionally sample emissions and other parameters and use the calculations in subpart G of this part to calculate emissions. Start a transient test according to the standard-setting part, as follows:

(i) A cold-start transient cycle where you start to measure emissions just before starting an engine that has not been warmed up.

(ii) A hot-start transient cycle where you start to measure emissions just before starting a warmed-up engine.

(iii) A hot running transient cycle where you start to measure emissions after an engine is started, warmed up, and running.

(2) *Steady-state cycles.* Steady-state duty cycles are typically specified in the standard-setting part as a list of discrete operating points (modes or notches), where each operating point has one value of a normalized speed command and one value of a normalized torque (or power) command. Ramped-modal cycles for steady-state testing also list test times for each mode and transition times between modes where speed and torque are linearly ramped between modes, even for cycles with % power. Start a steady-state cycle as a hot running test, where you start to measure emissions after an engine is started, warmed up and running. Run a steady-state duty cycle as a discrete-mode cycle or a ramped-modal cycle, as follows:

(i) *Discrete-mode cycles.* Before emission sampling, stabilize an engine at the first discrete mode of the duty cycle specified in the standard-setting part. Sample emissions and other parameters for that mode in the same manner as a transient cycle, with the exception that reference speed and torque values are constant. Record data for that mode, transition to the next mode, and then stabilize the engine at the next mode. Continue to sample each mode discretely as a separate test interval and calculate composite brake-specific emission results according to § 1065.650(g)(2).

(A) Use good engineering judgment to determine the time required to stabilize the engine. You may make this determination before starting the test based on prior experience, or you may make this determination in real time based an automated stability criteria. If needed, you may continue to operate the engine after reaching stability to

get laboratory equipment ready for sampling.

(B) Collect PM on separate PM sample media for each mode.

(C) The minimum sample time is 60 seconds. We recommend that you sample both gaseous and PM emissions over the same test interval. If you sample gaseous and PM emissions over different test intervals, there must be no change in engine operation between the two test intervals. These two test intervals may completely or partially overlap, they may run consecutively, or they may be separated in time.

(ii) *Ramped-modal cycles.* Perform ramped-modal cycles similar to the way you would perform transient cycles, except that ramped-modal cycles involve mostly steady-state engine operation. Generate a ramped-modal duty cycle as a sequence of second-by-second (1 Hz) reference speed and torque points. Run the ramped-modal duty cycle in the same manner as a transient cycle and use the 1 Hz reference speed and torque values to validate the cycle, even for cycles with % power. Proportionally sample emissions and other parameters during the cycle and use the calculations in subpart G of this part to calculate emissions.

(d) Other subparts in this part identify how to select and prepare an engine for testing (subpart E), how to perform the required engine service accumulation (subpart E), and how to calculate emission results (subpart G).

(e) Subpart J of this part describes how to perform field testing.

[79 FR 23773, Apr. 28, 2014]

§ 1065.510 Engine mapping.

(a) *Applicability, scope, and frequency.* An engine map is a data set that consists of a series of paired data points that represent the maximum brake torque versus engine speed, measured at the engine's primary output shaft. Map your engine if the standard-setting part requires engine mapping to generate a duty cycle for your engine configuration. Map your engine while it is connected to a dynamometer or other device that can absorb work output from the engine's primary output shaft according to § 1065.110. To establish speed and torque values for mapping, we generally recommend that you stabilize an engine for at least 15 seconds at each setpoint and record the mean feedback speed and torque of the last (4 to 6) seconds. Configure any auxiliary work inputs and outputs such as hybrid, turbo-compounding, or thermoelectric systems to represent their in-use configurations, and use the same configuration for emission testing. See Figure 1 of § 1065.210. This may involve configuring initial states of charge and rates and times of auxiliary-work inputs and outputs. We recommend that you contact the Designated Compliance Officer before testing to determine how you should configure any auxiliary-work inputs and outputs. Use the most recent engine map to transform a normalized duty cycle from the standard-setting part to a reference duty cycle specific to your engine. Normalized duty cycles are specified in the standard-setting part. You may update an engine map at any time by repeating the engine-mapping procedure. You must map or re-map an engine before a test if any of the following apply:

(1) If you have not performed an initial engine map.

(2) If the atmospheric pressure near the engine's air inlet is not within ±5 kPa of the atmospheric pressure recorded at the time of the last engine map.

(3) If the engine or emission-control system has undergone changes that might affect maximum torque performance. This includes changing the configuration of auxiliary work inputs and outputs.

(4) If you capture an incomplete map on your first attempt or you do not complete a map within the specified time tolerance. You may repeat mapping as often as necessary to capture a complete map within the specified time.

(b) *Mapping variable-speed engines.* Map variable-speed engines as follows:

(1) Record the atmospheric pressure.

(2) Warm up the engine by operating it. We recommend operating the engine at any speed and at approximately 75% of its expected maximum power. Continue the warm-up until the engine coolant, block, or head absolute temperature is within ±2% of its mean

value for at least 2 min or until the engine thermostat controls engine temperature.

(3) Operate the engine at its warm idle speed as follows:

(i) For engines with a low-speed governor, set the operator demand to minimum, use the dynamometer or other loading device to target a torque of zero on the engine's primary output shaft, and allow the engine to govern the speed. Measure this warm idle speed; we recommend recording at least 30 values of speed and using the mean of those values.

(ii) For engines without a low-speed governor, operate the engine at warm idle speed and zero torque on the engine's primary output shaft. You may use the dynamometer to target a torque of zero on the engine's primary output shaft, and manipulate the operator demand to control the speed to target the manufacturer-declared value for the lowest engine speed possible with minimum load (also known as manufacturer-declared warm idle speed). You may alternatively use the dynamometer to target the manufacturer-declared warm idle speed and manipulate the operator demand to control the torque on the engine's primary output shaft to zero.

(iii) For variable-speed engines with or without a low-speed governor, if a nonzero idle torque is representative of in-use operation, you may use the dynamometer or operator demand to target the manufacturer-declared idle torque instead of targeting zero torque as specified in paragraphs (b)(3)(i) and (ii) of this section. Control speed as specified in paragraph (b)(3)(i) or (ii) of this section, as applicable. If you use this option for engines with a low-speed governor to measure the warm idle speed with the manufacturer-declared torque at this step, you may use this as the warm-idle speed for cycle generation as specified in paragraph (b)(6) of this section. However, if you identify multiple warm idle torques under paragraph (f)(4)(i) of this section, measure the warm idle speed at only one torque level for this paragraph (b)(3).

(4) Set operator demand to maximum and control engine speed at (95 ±1) % of its warm idle speed determined above for at least 15 seconds. For engines with reference duty cycles whose lowest speed is greater than warm idle speed, you may start the map at (95 ±1) % of the lowest reference speed.

(5) Perform one of the following:

(i) For any engine subject only to steady-state duty cycles, you may perform an engine map by using discrete speeds. Select at least 20 evenly spaced setpoints from 95% of warm idle speed to the highest speed above maximum power at which 50% of maximum power occurs. We refer to this 50% speed as the check point speed as described in paragraph (b)(5)(iii) of this section. At each setpoint, stabilize speed and allow torque to stabilize. Record the mean speed and torque at each setpoint. Use linear interpolation to determine intermediate speeds and torques. Use this series of speeds and torques to generate the power map as described in paragraph (e) of this section.

(ii) For any variable-speed engine, you may perform an engine map by using a continuous sweep of speed by continuing to record the mean feedback speed and torque at 1 Hz or more frequently and increasing speed at a constant rate such that it takes (4 to 6) min to sweep from 95% of warm idle speed to the check point speed as described in paragraph (b)(5)(iii) of this section. Use good engineering judgment to determine when to stop recording data to ensure that the sweep is complete. In most cases, this means that you can stop the sweep at any point after the power falls to 50% of the maximum value. From the series of mean speed and maximum torque values, use linear interpolation to determine intermediate values. Use this series of speeds and torques to generate the power map as described in paragraph (e) of this section.

(iii) The check point speed of the map is the highest speed above maximum power at which 50% of maximum power occurs. If this speed is unsafe or unachievable (*e.g.*, for ungoverned engines or engines that do not operate at that point), use good engineering judgment to map up to the maximum safe speed or maximum achievable speed. For discrete mapping, if the engine cannot be mapped to the check point speed, make sure the map includes at

least 20 points from 95% of warm idle to the maximum mapped speed. For continuous mapping, if the engine cannot be mapped to the check point speed, verify that the sweep time from 95% of warm idle to the maximum mapped speed is (4 to 6) min.

(iv) Note that under §1065.10(c)(1) we may allow you to disregard portions of the map when selecting maximum test speed if the specified procedure would result in a duty cycle that does not represent in-use operation.

(6) Use one of the following methods to determine warm high-idle speed for engines with a high-speed governor if they are subject to transient testing with a duty cycle that includes reference speed values above 100%:

(i) You may use a manufacturer-declared warm high-idle speed if the engine is electronically governed. For engines with a high-speed governor that shuts off torque output at a manufacturer-specified speed and reactivates at a lower manufacturer-specified speed (such as engines that use ignition cut-off for governing), declare the middle of the specified speed range as the warm high-idle speed.

(ii) Measure the warm high-idle speed using the following procedure:

(A) Set operator demand to maximum and use the dynamometer to target zero torque on the engine's primary output shaft. If the mean feedback torque is within ±1% of $T_{max\ mapped}$, you may use the observed mean feedback speed at that point as the measured warm high-idle speed.

(B) If the engine is unstable as a result of in-use production components (such as engines that use ignition cut-off for governing, as opposed to unstable dynamometer operation), you must use the mean feedback speed from paragraph (b)(6)(ii)(A) of this section as the measured warm high-idle speed. The engine is considered unstable if any of the 1 Hz speed feedback values are not within ±2% of the calculated mean feedback speed. We recommend that you determine the mean as the value representing the midpoint between the observed maximum and minimum recorded feedback speed.

(C) If your dynamometer is not capable of achieving a mean feedback torque within ±1% of $T_{max\ mapped}$, operate the engine at a second point with operator demand set to maximum with the dynamometer set to target a torque equal to the recorded mean feedback torque on the previous point plus 20% of $T_{max\ mapped}$. Use this data point and the data point from paragraph (b)(6)(ii)(A) of this section to extrapolate the engine speed where torque is equal to zero.

(D) You may use a manufacturer-declared T_{max} instead of the measured $T_{max\ mapped}$. If you do this, or if you are able to determine mean feedback speed as described in paragraphs (b)(6)(ii)(A) and (B) of this section, you may measure the warm high-idle speed before running the speed sweep specified in paragraph (b)(5) of this section.

(7) For engines with a low-speed governor, if a nonzero idle torque is representative of in-use operation, operate the engine at warm idle with the manufacturer-declared idle torque. Set the operator demand to minimum, use the dynamometer to target the declared idle torque, and allow the engine to govern the speed. Measure this speed and use it as the warm idle speed for cycle generation in §1065.512. We recommend recording at least 30 values of speed and using the mean of those values. If you identify multiple warm idle torques under paragraph (f)(4)(i) of this section, measure the warm idle speed at each torque. You may map the idle governor at multiple load levels and use this map to determine the measured warm idle speed at the declared idle torque(s).

(c) *Negative torque mapping*. If your engine is subject to a reference duty cycle that specifies negative torque values (*i.e.*, engine motoring), generate a motoring torque curve by any of the following procedures:

(1) Multiply the positive torques from your map by −40%. Use linear interpolation to determine intermediate values.

(2) Map the amount of negative torque required to motor the engine by repeating paragraph (b) of this section with minimum operator demand. You may start the negative torque map at either the minimum or maximum speed from paragraph (b) of this section.

(3) Determine the amount of negative torque required to motor the engine at the following two points near the ends of the engine's speed range. Operate the engine at these two points at minimum operator demand. Use linear interpolation to determine intermediate values.

(i) *Low-speed point*. For engines without a low-speed governor, determine the amount of negative torque at warm idle speed. For engines with a low-speed governor, motor the engine above warm idle speed so the governor is inactive and determine the amount of negative torque at that speed.

(ii) *High-speed point*. For engines without a high-speed governor, determine the amount of negative torque at the maximum safe speed or the maximum representative speed. For engines with a high-speed governor, determine the amount of negative torque at a speed at or above n_{hi} per §1065.610(c)(2).

(4) For engines with an electric hybrid system, map the negative torque required to motor the engine and absorb any power delivered from the RESS by repeating paragraph (g)(2) of this section with minimum operator demand, stopping the sweep to discharge the RESS when the absolute instantaneous power measured from the RESS drops below the expected maximum absolute power from the RESS by more than 2% of total system maximum power (including engine motoring and RESS power) as determined from mapping the negative torque.

(d) *Mapping constant-speed engines*. For constant-speed engines, generate a map as follows:

(1) Record the atmospheric pressure.

(2) Warm up the engine by operating it. We recommend operating the engine at approximately 75% of the engine's expected maximum power. Continue the warm-up until the engine coolant, block, or head absolute temperature is within ±2% of its mean value for at least 2 min or until the engine thermostat controls engine temperature.

(3) You may operate the engine with a production constant-speed governor or simulate a constant-speed governor by controlling engine speed with an operator demand control system described in §1065.110. Use either isochronous or speed-droop governor operation, as appropriate.

(4) With the governor or simulated governor controlling speed using operator demand, operate the engine at no-load governed speed (at high speed, not low idle) for at least 15 seconds.

(5) Record at 1 Hz the mean of feedback speed and torque. Use the dynamometer to increase torque at a constant rate. Unless the standard-setting part specifies otherwise, complete the map such that it takes (2 to 4) min to sweep from no-load governed speed to the speed below maximum mapped power at which the engine develops 90% of maximum mapped power. You may map your engine to lower speeds. Stop recording after you complete the sweep. Use this series of speeds and torques to generate the power map as described in paragraph (e) of this section.

(i) For constant-speed engines subject only to steady-state testing, you may perform an engine map by using a series of discrete torques. Select at least five evenly spaced torque setpoints from no-load to 80% of the manufacturer-declared test torque or to a torque derived from your published maximum power level if the declared test torque is unavailable. Starting at the 80% torque point, select setpoints in 2.5% or smaller intervals, stopping at the endpoint torque. The endpoint torque is defined as the first discrete mapped torque value greater than the torque at maximum observed power where the engine outputs 90% of the maximum observed power; or the torque when engine stall has been determined using good engineering judgment (*i.e.* sudden deceleration of engine speed while adding torque). You may continue mapping at higher torque setpoints. At each setpoint, allow torque and speed to stabilize. Record the mean feedback speed and torque at each setpoint. From this series of mean feedback speed and torque values, use linear interpolation to determine intermediate values. Use this series of mean feedback speeds and torques to generate the power map as described in paragraph (e) of this section.

(ii) For any constant-speed engine, you may perform an engine map with a continuous torque sweep by continuing

to record the mean feedback speed and torque at 1 Hz or more frequently. Use the dynamometer to increase torque. Increase the reference torque at a constant rate from no-load to the endpoint torque as defined in paragraph (d)(5)(i) of this section. You may continue mapping at higher torque setpoints. Unless the standard-setting part specifies otherwise, target a torque sweep rate equal to the manufacturer-declared test torque (or a torque derived from your published power level if the declared test torque is not known) divided by 180 seconds. Stop recording after you complete the sweep. Verify that the average torque sweep rate over the entire map is within ±7% of the target torque sweep rate. Use linear interpolation to determine intermediate values from this series of mean feedback speed and torque values. Use this series of mean feedback speeds and torques to generate the power map as described in paragraph (e) of this section.

(iii) For any isochronous governed (0% speed droop) constant-speed engine, you may map the engine with two points as described in this paragraph (d)(5)(iii). After stabilizing at the no-load governed speed in paragraph (d)(4) of this section, record the mean feedback speed and torque. Continue to operate the engine with the governor or simulated governor controlling engine speed using operator demand, and control the dynamometer to target a speed of 99.5% of the recorded mean no-load governed speed. Allow speed and torque to stabilize. Record the mean feedback speed and torque. Record the target speed. The absolute value of the speed error (the mean feedback speed minus the target speed) must be no greater than 0.1% of the recorded mean no-load governed speed. From this series of two mean feedback speed and torque values, use linear interpolation to determine intermediate values. Use this series of two mean feedback speeds and torques to generate a power map as described in paragraph (e) of this section. Note that the measured maximum test torque as determined in §1065.610 (b)(1) will be the mean feedback torque recorded on the second point.

(e) *Power mapping*. For all engines, create a power-versus-speed map by transforming torque and speed values to corresponding power values. Use the mean values from the recorded map data. Do not use any interpolated values. Multiply each torque by its corresponding speed and apply the appropriate conversion factors to arrive at units of power (kW). Interpolate intermediate power values between these power values, which were calculated from the recorded map data.

(f) *Measured and declared test speeds and torques*. You must select test speeds and torques for cycle generation as required in this paragraph (f). ''Measured'' values are either directly measured during the engine mapping process or they are determined from the engine map. ''Declared'' values are specified by the manufacturer. When both measured and declared values are available, you may use declared test speeds and torques instead of measured speeds and torques if they meet the criteria in this paragraph (f). Otherwise, you must use measured speeds and torques derived from the engine map.

(1) *Measured speeds and torques*. Determine the applicable speeds and torques for the duty cycles you will run:

(i) Measured maximum test speed for variable-speed engines according to §1065.610.

(ii) Measured maximum test torque for constant-speed engines according to §1065.610.

(iii) Measured ''A'', ''B'', and ''C'' speeds for variable-speed engines according to §1065.610.

(iv) Measured intermediate speed for variable-speed engines according to §1065.610.

(v) For variable-speed engines with a low-speed governor, measure warm idle speed according to §1065.510(b) and use this speed for cycle generation in §1065.512. For engines with no low-speed governor, instead use the manufacturer-declared warm idle speed.

(2) *Required declared speeds*. You must declare the lowest engine speed possible with minimum load (*i.e.*, manufacturer-declared warm idle speed). This is applicable only to variable-speed engines with no low-speed governor. For engines with no low-speed governor, the declared warm idle speed is used for cycle generation in

§ 1065.512. Declare this speed in a way that is representative of in-use operation. For example, if your engine is typically connected to an automatic transmission or a hydrostatic transmission, declare this speed at the idle speed at which your engine operates when the transmission is engaged.

(3) *Optional declared speeds.* You may use declared speeds instead of measured speeds as follows:

(i) You may use a declared value for maximum test speed for variable-speed engines if it is within (97.5 to 102.5) % of the corresponding measured value. You may use a higher declared speed if the length of the ''vector'' at the declared speed is within 2% of the length of the ''vector'' at the measured value. The term vector refers to the square root of the sum of normalized engine speed squared and the normalized full-load power (at that speed) squared, consistent with the calculations in § 1065.610.

(ii) You may use a declared value for intermediate, ''A'', ''B'', or ''C'' speeds for steady-state tests if the declared value is within (97.5 to 102.5)% of the corresponding measured value.

(iii) For electronically governed engines, you may use a declared warm high-idle speed for calculating the alternate maximum test speed as specified in § 1065.610.

(4) *Required declared torques.* If a nonzero idle or minimum torque is representative of in-use operation, you must declare the appropriate torque as follows:

(i) For variable-speed engines, declare a warm idle torque that is representative of in-use operation. For example, if your engine is typically connected to an automatic transmission or a hydrostatic transmission, declare the torque that occurs at the idle speed at which your engine operates when the transmission is engaged. Use this value for cycle generation. You may use multiple warm idle torques and associated idle speeds in cycle generation for representative testing. For example, for cycles that start the engine and begin with idle, you may start a cycle in idle with the transmission in neutral with zero torque and later switch to a different idle with the transmission in drive with the Curb-Idle Transmission Torque (CITT). For variable-speed engines intended primarily for propulsion of a vehicle with an automatic transmission where that engine is subject to a transient duty cycle with idle operation, you must declare a CITT. You must specify a CITT based on typical applications at the mean of the range of idle speeds you specify at stabilized temperature conditions.

(ii) For constant-speed engines, declare a warm minimum torque that is representative of in-use operation. For example, if your engine is typically connected to a machine that does not operate below a certain minimum torque, declare this torque and use it for cycle generation.

(5) *Optional declared torques.* (i) For variable-speed engines you may declare a maximum torque over the engine operating range. You may use the declared value for measuring warm high-idle speed as specified in this section.

(ii) For constant-speed engines you may declare a maximum test torque. You may use the declared value for cycle generation if it is within (95 to 100) % of the measured value.

(g) *Mapping variable-speed engines with an electric hybrid system.* Map variable-speed engines that include electric hybrid systems as described in this paragraph (g). You may ask to apply these provisions to other types of hybrid engines, consistent with good engineering judgment. However, do not use this procedure for engines used in hybrid vehicles where the hybrid system is certified as part of the vehicle rather than the engine. Follow the steps for mapping a variable-speed engine as given in paragraph (b)(5) of this section except as noted in this paragraph (g). You must generate one engine map with the hybrid system inactive as described in paragraph (g)(1) of this section, and a separate map with the hybrid system active as described in paragraph (g)(2) of this section. See the standard-setting part to determine how to use these maps. The map with the system inactive is typically used to generate steady-state duty cycles, but may also be used to generate transient cycles, such as those that do not involve engine motoring. This hybrid-inactive map is also used for generating

the hybrid-active map. The hybrid-active map is typically used to generate transient duty cycles that involve engine motoring.

(1) Prepare the engine for mapping by either deactivating the hybrid system or by operating the engine as specified in paragraph (b)(4) of this section and remaining at this condition until the rechargeable energy storage system (RESS) is depleted. Once the hybrid has been disabled or the RESS is depleted, perform an engine map as specified in paragraph (b)(5) of this section. If the RESS was depleted instead of deactivated, ensure that instantaneous power from the RESS remains less than 2% of the instantaneous measured power from the engine (or engine-hybrid system) at all engine speeds.

(2) The purpose of the mapping procedure in this paragraph (g) is to determine the maximum torque available at each speed, such as what might occur during transient operation with a fully charged RESS. Use one of the following methods to generate a hybrid-active map:

(i) Perform an engine map by using a series of continuous sweeps to cover the engine's full range of operating speeds. Prepare the engine for hybrid-active mapping by ensuring that the RESS state of charge is representative of normal operation. Perform the sweep as specified in paragraph (b)(5)(ii) of this section, but stop the sweep to charge the RESS when the power measured from the RESS drops below the expected maximum power from the RESS by more than 2% of total system power (including engine and RESS power). Unless good engineering judgment indicates otherwise, assume that the expected maximum power from the RESS is equal to the measured RESS power at the start of the sweep segment. For example, if the 3-second rolling average of total engine-RESS power is 200 kW and the power from the RESS at the beginning of the sweep segment is 50 kW, once the power from the RESS reaches 46 kW, stop the sweep to charge the RESS. Note that this assumption is not valid where the hybrid motor is torque-limited. Calculate total system power as a 3-second rolling average of instantaneous total system power. After each charging event, stabilize the engine for 15 seconds at the speed at which you ended the previous segment with operator demand set to maximum before continuing the sweep from that speed. Repeat the cycle of charging, mapping, and recharging until you have completed the engine map. You may shut down the system or include other operation between segments to be consistent with the intent of this paragraph (g)(2)(i). For example, for systems in which continuous charging and discharging can overheat batteries to an extent that affects performance, you may operate the engine at zero power from the RESS for enough time after the system is recharged to allow the batteries to cool. Use good engineering judgment to smooth the torque curve to eliminate discontinuities between map intervals.

(ii) Perform an engine map by using discrete speeds. Select map setpoints at intervals defined by the ranges of engine speed being mapped. From 95% of warm idle speed to 90% of the expected maximum test speed, select setpoints that result in a minimum of 13 equally spaced speed setpoints. From 90% to 110% of expected maximum test speed, select setpoints in equally spaced intervals that are nominally 2% of expected maximum test speed. Above 110% of expected maximum test speed, select setpoints based on the same speed intervals used for mapping from 95% warm idle speed to 90% maximum test speed. You may stop mapping at the highest speed above maximum power at which 50% of maximum power occurs. We refer to the speed at 50% power as the check point speed as described in paragraph (b)(5)(iii) of this section. Stabilize engine speed at each setpoint, targeting a torque value at 70% of peak torque at that speed without hybrid-assist. Make sure the engine is fully warmed up and the RESS state of charge is within the normal operating range. Snap the operator demand to maximum, operate the engine there for at least 10 seconds, and record the 3-second rolling average feedback speed and torque at 1 Hz or higher. Record the peak 3-second average torque and 3-second average speed at that point. Use linear interpolation to determine intermediate speeds and torques. Follow

§ 1065.610(a) to calculate the maximum test speed. Verify that the measured maximum test speed falls in the range from 92 to 108% of the estimated maximum test speed. If the measured maximum test speed does not fall in this range, rerun the map using the measured value of maximum test speed.

(h) *Other mapping procedures.* You may use other mapping procedures if you believe the procedures specified in this section are unsafe or unrepresentative for your engine. Any alternate techniques you use must satisfy the intent of the specified mapping procedures, which is to determine the maximum available torque at all engine speeds that occur during a duty cycle. Identify any deviations from this section's mapping procedures when you submit data to us.

[73 FR 37315, June 30, 2008, as amended at 73 FR 59330, Oct. 8, 2008; 75 FR 23042, Apr. 30, 2010; 76 FR 57448, Sept. 15, 2011; 79 FR 23773, Apr. 28, 2014; 81 FR 74169, Oct. 25, 2016]

EFFECTIVE DATE NOTE: At 86 FR 34545, June 29, 2021, § 1065.510 was amended, effective July 29, 2021.

§ 1065.512 Duty cycle generation.

(a) Generate duty cycles according to this section if the standard-setting part requires engine mapping to generate a duty cycle for your engine configuration. The standard-setting part generally defines applicable duty cycles in a normalized format. A normalized duty cycle consists of a sequence of paired values for speed and torque or for speed and power.

(b) Transform normalized values of speed, torque, and power using the following conventions:

(1) *Engine speed for variable-speed engines.* For variable-speed engines, normalized speed may be expressed as a percentage between warm idle speed, f_{nidle}, and maximum test speed, f_{ntest}, or speed may be expressed by referring to a defined speed by name, such as ''warm idle,'' ''intermediate speed,'' or ''A,'' ''B,'' or ''C'' speed. Section 1065.610 describes how to transform these normalized values into a sequence of reference speeds, f_{nref}. Running duty cycles with negative or small normalized speed values near warm idle speed may cause low-speed idle governors to activate and the engine torque to exceed the reference torque even though the operator demand is at a minimum. In such cases, we recommend controlling the dynamometer so it gives priority to follow the reference torque instead of the reference speed and let the engine govern the speed. Note that the cycle-validation criteria in § 1065.514 allow an engine to govern itself. This allowance permits you to test engines with enhanced-idle devices and to simulate the effects of transmissions such as automatic transmissions. For example, an enhanced-idle device might be an idle speed value that is normally commanded only under cold-start conditions to quickly warm up the engine and aftertreatment devices. In this case, negative and very low normalized speeds will generate reference speeds below this higher enhanced idle speed and we recommend controlling the dynamometer so it gives priority to follow the reference torque, controlling the operator demand so it gives priority to follow reference speed and let the engine govern the speed when the operator demand is at minimum.

(2) *Engine torque for variable-speed engines.* For variable-speed engines, normalized torque is expressed as a percentage of the mapped torque at the corresponding reference speed. Section 1065.610 describes how to transform normalized torques into a sequence of reference torques, T_{ref}. Section 1065.610 also describes special requirements for modifying transient duty cycles for variable-speed engines intended primarily for propulsion of a vehicle with an automatic transmission. Section 1065.610 also describes under what conditions you may command T_{ref} greater than the reference torque you calculated from a normalized duty cycle. This provision permits you to command T_{ref} values that are limited by a declared minimum torque. For any negative torque commands, command minimum operator demand and use the dynamometer to control engine speed to the reference speed, but if reference speed is so low that the idle governor activates, we recommend using the dynamometer to control torque to zero, CITT, or a declared minimum torque as appropriate. Note that you may omit

power and torque points during motoring from the cycle-validation criteria in § 1065.514. Also, use the maximum mapped torque at the minimum mapped speed as the maximum torque for any reference speed at or below the minimum mapped speed.

(3) *Engine torque for constant-speed engines.* For constant-speed engines, normalized torque is expressed as a percentage of maximum test torque, T_{test}. Section 1065.610 describes how to transform normalized torques into a sequence of reference torques, T_{ref}. Section 1065.610 also describes under what conditions you may command T_{ref} greater than the reference torque you calculated from the normalized duty cycle. This provision permits you to command T_{ref} values that are limited by a declared minimum torque.

(4) *Engine power.* For all engines, normalized power is expressed as a percentage of mapped power at maximum test speed, f_{ntest}, unless otherwise specified by the standard-setting part. Section 1065.610 describes how to transform these normalized values into a sequence of reference powers, P_{ref}. Convert these reference powers to corresponding torques for operator demand and dynamometer control. Use the reference speed associated with each reference power point for this conversion. As with cycles specified with % torque, issue torque commands more frequently and linearly interpolate between these reference torque values generated from cycles with % power.

(5) *Ramped-modal cycles.* For ramped-modal cycles, generate reference speed and torque values at 1 Hz and use this sequence of points to run the cycle and validate it in the same manner as with a transient cycle. During the transition between modes, linearly ramp the denormalized reference speed and torque values between modes to generate reference points at 1 Hz. Do not linearly ramp the normalized reference torque values between modes and then denormalize them. Do not linearly ramp normalized or denormalized reference power points. These cases will produce nonlinear torque ramps in the denormalized reference torques. If the speed and torque ramp runs through a point above the engine's torque curve, continue to command the reference torques and allow the operator demand to go to maximum. Note that you may omit power and either torque or speed points from the cycle-validation criteria under these conditions as specified in § 1065.514.

(c) For variable-speed engines, command reference speeds and torques sequentially to perform a duty cycle. Issue speed and torque commands at a frequency of at least 5 Hz for transient cycles and at least 1 Hz for steady-state cycles (*i.e.*, discrete-mode and ramped-modal). Linearly interpolate between the 1 Hz reference values specified in the standard-setting part to determine more frequently issued reference speeds and torques. During an emission test, record the feedback speeds and torques at a frequency of at least 5 Hz for transient cycles and at least 1 Hz for steady-state cycles. For transient cycles, you may record the feedback speeds and torques at lower frequencies (as low as 1 Hz) if you record the average value over the time interval between recorded values. Calculate the average values based on feedback values updated at a frequency of at least 5 Hz. Use these recorded values to calculate cycle-validation statistics and total work.

(d) For constant-speed engines, operate the engine with the same production governor you used to map the engine in § 1065.510 or simulate the in-use operation of a governor the same way you simulated it to map the engine in § 1065.510. Command reference torque values sequentially to perform a duty cycle. Issue torque commands at a frequency of at least 5 Hz for transient cycles and at least 1 Hz for steady-state cycles (*i.e.*, discrete-mode, ramped-modal). Linearly interpolate between the 1 Hz reference values specified in the standard-setting part to determine more frequently issued reference torque values. During an emission test, record the feedback speeds and torques at a frequency of at least 5 Hz for transient cycles and at least 1 Hz for steady-state cycles. For transient cycles, you may record the feedback speeds and torques at lower frequencies (as low as 1 Hz) if you record the average value over the time interval between recorded values. Calculate the

average values based on feedback values updated at a frequency of at least 5 Hz. Use these recorded values to calculate cycle-validation statistics and total work.

(e) You may perform practice duty cycles with the test engine to optimize operator demand and dynamometer controls to meet the cycle-validation criteria specified in § 1065.514.

[73 FR 37317, June 30, 2008, as amended at 79 FR 23774, Apr. 28, 2014]

EFFECTIVE DATE NOTE: At 86 FR 34546, June 29, 2021, § 1065.512 was amended, effective July 29, 2021.

§ 1065.514 Cycle-validation criteria for operation over specified duty cycles.

Validate the execution of your duty cycle according to this section unless the standard-setting part specifies otherwise. This section describes how to determine if the engine's operation during the test adequately matched the reference duty cycle. This section applies only to speed, torque, and power from the engine's primary output shaft. Other work inputs and outputs are not subject to cycle-validation criteria. You must compare the original reference duty cycle points generated as described in § 1065.512 to the corresponding feedback values recorded during the test. You may compare reference duty cycle points recorded during the test to the corresponding feedback values recorded during the test as long as the recorded reference values match the original points generated in § 1065.512. The number of points in the validation regression are based on the number of points in the original reference duty cycle generated in § 1065.512. For example if the original cycle has 1199 reference points at 1 Hz, then the regression will have up to 1199 pairs of reference and feedback values at the corresponding moments in the test. The feedback speed and torque signals may be filtered—either in real-time while the test is run or afterward in the analysis program. Any filtering that is used on the feedback signals used for cycle validation must also be used for calculating work. Feedback signals for control loops may use different filtering.

(a) *Testing performed by EPA.* Our tests must meet the specifications of paragraph (f) of this section, unless we determine that failing to meet the specifications is related to engine performance rather than to shortcomings of the dynamometer or other laboratory equipment.

(b) *Testing performed by manufacturers.* Emission tests that meet the specifications of paragraph (f) of this section satisfy the standard-setting part's requirements for duty cycles. You may ask to use a dynamometer or other laboratory equipment that cannot meet those specifications. We will approve your request as long as using the alternate equipment does not adversely affect your ability to show compliance with the applicable emission standards.

(c) *Time-alignment.* Because time lag between feedback values and the reference values may bias cycle-validation results, you may advance or delay the entire sequence of feedback engine speed and torque pairs to synchronize them with the reference sequence. If you advance or delay feedback signals for cycle validation, you must make the same adjustment for calculating work. You may use linear interpolation between successive recorded feedback signals to time shift an amount that is a fraction of the recording period.

(d) *Omitting additional points.* Besides engine cranking, you may omit additional points from cycle-validation statistics as described in the following table:

TABLE 1 OF § 1065.514—PERMISSIBLE CRITERIA FOR OMITTING POINTS FROM DUTY-CYCLE REGRESSION STATISTICS

When operator demand is at its . . .	you may omit . . .	if . . .
For reference duty cycles that are specified in terms of speed and torque (f_{nref}, T_{ref})		
minimum	power and torque	T_{ref} <0% (motoring).
minimum	power and speed	f_{nref} = 0% (idle speed) and T_{ref} = 0% (idle torque) and $T_{ref} - (2\% \cdot T_{max\ mapped}) < T < T_{ref} + (2\% \cdot T_{max\ mapped})$.

TABLE 1 OF § 1065.514—PERMISSIBLE CRITERIA FOR OMITTING POINTS FROM DUTY-CYCLE REGRESSION STATISTICS—Continued

When operator demand is at its . . .	you may omit . . .	if . . .
minimum	power and either torque or speed.	$f_n > f_{nref}$ or $T > T_{ref}$ but not if $f_n > (f_{nref} \cdot 102\%)$ and $T > T_{ref} \pm (2\% \cdot T_{max\ mapped})$.
maximum	power and either torque or speed.	$f_n < f_{nref}$ or $T < T_{ref}$ but not if $f_n < (f_{nref} \cdot 98\%)$ and $T < T_{ref} - (2\% \cdot T_{max\ mapped})$.
For reference duty cycles that are specified in terms of speed and power (f_{nref}, P_{ref})		
minimum	power and torque	$P_{ref} < 0\%$ (motoring).
minimum	power and speed	$f_{nref} = 0\%$ (idle speed) and $P_{ref} = 0\%$ (idle power) and $P_{ref} - (2\% \cdot P_{max\ mapped}) < P < P_{ref} + (2\% \cdot P_{max\ mapped})$.
minimum	power and either torque or speed.	$f_n > f_{nref}$ or $P > P_{ref}$ but not if $f_n > (f_{nref} \cdot 102\%)$ and $P > P_{ref} + (2\% \cdot P_{max\ mapped})$.
maximum	power and either torque or speed.	$f_n < f_{nref}$ or $P < P_{ref}$ but not if $f_n < (f_{nref} \cdot 98\%)$ and $P < P_{ref} - (2\% \cdot P_{max\ mapped})$.

(e) *Statistical parameters*. Use the remaining points to calculate regression statistics described in § 1065.602. Round calculated regression statistics to the same number of significant digits as the criteria to which they are compared. Refer to Table 2 of § 1065.514 for the default criteria and refer to the standard-setting part to determine if there are other criteria for your engine. Calculate the following regression statistics:

(1) Slopes for feedback speed, a_{1fn}, feedback torque, a_{1T}, and feedback power a_{1P}.

(2) Intercepts for feedback speed, a_{0fn}, feedback torque, a_{0T}, and feedback power a_{0P}.

(3) Standard estimates of error for feedback speed, SEE_{fn}, feedback torque, SEE_T, and feedback power SEE_P.

(4) Coefficients of determination for feedback speed, r^2_{fn}, feedback torque, r^2_T, and feedback power r^2_P.

(f) *Cycle-validation criteria*. Unless the standard-setting part specifies otherwise, use the following criteria to validate a duty cycle:

(1) For variable-speed engines, apply all the statistical criteria in Table 2 of this section.

(2) For constant-speed engines, apply only the statistical criteria for torque in Table 2 of this section.

(3) For discrete-mode steady-state testing, apply cycle-validation criteria by treating the sampling periods from the series of test modes as a continuous sampling period, analogous to ramped-modal testing and apply statistical criteria as described in paragraph (f)(1) or (f)(2) of this section. Note that if the gaseous and particulate test intervals are different periods of time, separate validations are required for the gaseous and particulate test intervals. Table 2 follows:

TABLE 2 OF § 1065.514—DEFAULT STATISTICAL CRITERIA FOR VALIDATING DUTY CYCLES

Parameter	Speed	Torque	Power
Slope, a_1	$0.950 \le a_1 \le 1.030$	$0.830 \le a_1 \le 1.030$	$0.830 \le a_1 \le 1.030$.
Absolute value of intercept, $\lvert a_0 \rvert$	≤10% of warm idle	≤2% of maximum mapped torque.	≤2% of maximum mapped power.
Standard error of estimate, *SEE*.	≤5% of maximum test speed	≤10% of maximum mapped torque.	≤10% of maximum mapped power.
Coefficient of determination, r^2	≥0.970	≥0.850	≥0.910.

[73 FR 37318, June 30, 2008, as amended at 73 FR 59330, Oct. 8, 2008; 75 FR 23042, Apr. 30, 2010; 76 FR 57450, Sept. 15, 2011]

EFFECTIVE DATE NOTE: At 86 FR 34546, June 29, 2021, § 1065.514 was amended, effective July 29, 2021.

§ 1065.516 Sample system decontamination and preconditioning.

This section describes how to manage the impact of sampling system contamination on emission measurements. Use good engineering judgment to determine if you should decontaminate and precondition your sampling system. Contamination occurs when a regulated pollutant accumulates in the sample system in a high enough concentration to cause release during emission tests. Hydrocarbons and PM are generally the only regulated pollutants that contaminate sample systems. Note that although this section focuses on avoiding excessive contamination of sampling systems, you must also use good engineering judgment to avoid loss of sample to a sampling system that is too clean. The goal of decontamination is not to perfectly clean the sampling system, but rather to achieve equilibrium between the sampling system and the exhaust so emission components are neither lost to nor entrained from the sampling system.

(a) You may perform contamination checks as follows to determine if decontamination is needed:

(1) For dilute exhaust sampling systems, measure hydrocarbon and PM emissions by sampling with the CVS dilution air turned on, without an engine connected to it.

(2) For raw analyzers and systems that collect PM samples from raw exhaust, measure hydrocarbon and PM emissions by sampling purified air or nitrogen.

(3) When calculating zero emission levels, apply all applicable corrections, including initial THC contamination and diluted (CVS) exhaust background corrections.

(4) Sampling systems are considered contaminated if either of the following conditions applies:

(i) The hydrocarbon emission level exceeds 2% of the flow-weighted mean concentration expected at the HC standard.

(ii) The PM emission level exceeds 5% of the level expected at the standard and exceeds 20 μg on a 47 mm PTFE membrane filter.

(b) To precondition or decontaminate sampling systems, use the following recommended procedure or select a different procedure using good engineering judgment:

(1) Start the engine and use good engineering judgment to operate it at a condition that generates high exhaust temperatures at the sample probe inlet.

(2) Operate any dilution systems at their expected flow rates. Prevent aqueous condensation in the dilution systems.

(3) Operate any PM sampling systems at their expected flow rates.

(4) Sample PM for at least 10 min using any sample media. You may change sample media at any time during this process and you may discard them without weighing them.

(5) You may purge any gaseous sampling systems that do not require decontamination during this procedure.

(6) You may conduct calibrations or verifications on any idle equipment or analyzers during this procedure.

(c) If your sampling system is still contaminated following the procedures specified in paragraph (b) of this section, you may use more aggressive procedures to decontaminate the sampling system, as long as the decontamination does not cause the sampling system to be cleaner than an equilibrium condition such that artificially low emission measurements may result.

[79 FR 23774, Apr. 28, 2014]

§ 1065.518 Engine preconditioning.

(a) This section applies for engines where measured emissions are affected by prior operation, such as with a diesel engine that relies on urea-based selective catalytic reduction. Note that § 1065.520(e) allows you to run practice duty cycles before the emission test; this section recommends how to do this for the purpose of preconditioning the engine. Follow the standard-setting part if it specifies a different engine preconditioning procedure.

(b) The intent of engine preconditioning is to manage the representativeness of emissions and emission controls over the duty cycle and to reduce bias.

(c) This paragraph (c) specifies the engine preconditioning procedures for

different types of duty cycles. You must identify the amount of preconditioning before starting to precondition. You must run the predefined amount of preconditioning. You may measure emissions during preconditioning. You may not abort an emission test sequence based on emissions measured during preconditioning. For confirmatory testing, you may ask us to run more preconditioning cycles than we specify in this paragraph (c); we will agree to this only if you show that additional preconditioning cycles are required to meet the intent of paragraph (b) of this section, for example, due to the effect of DPF regeneration on NH_3 storage in the SCR catalyst. Perform preconditioning as follows, noting that the specific cycles for preconditioning are the same ones that apply for emission testing:

(1) *Cold-start transient cycle.* Precondition the engine by running at least one hot-start transient cycle. We will precondition your engine by running two hot-start transient cycles. Immediately after completing each preconditioning cycle, shut down the engine and complete the engine-off soak period. Immediately after completing the last preconditioning cycle, shut down the engine and begin the cold soak as described in §1065.530(a)(1).

(2) *Hot-start transient cycle.* Precondition the engine by running at least one hot-start transient cycle. We will precondition your engine by running two hot-start transient cycles. Immediately after completing each preconditioning cycle, shut down the engine, then start the next cycle (including the emission test) as soon as practical. For any repeat cycles, start the next cycle within 60 seconds after completing the last preconditioning cycle (this is optional for manufacturer testing).

(3) *Hot-running transient cycle.* Precondition the engine by running at least one hot-running transient cycle. We will precondition your engine by running two hot-running transient cycles. Do not shut down the engine between cycles. Immediately after completing each preconditioning cycle, start the next cycle (including the emission test) as soon as practical. For any repeat cycles, start the next cycle within 60 seconds after completing the last preconditioning cycle (this is optional for manufacturer testing). See §1065.530(a)(1)(iii) for additional instructions if the cycle begins and ends under different operating conditions.

(4) *Discrete-mode cycle for steady-state testing.* Precondition the engine at the same operating condition as the next test mode, unless the standard-setting part specifies otherwise. We will precondition your engine by running it for at least five minutes before sampling.

(5) *Ramped-modal cycle for steady-state testing.* Precondition the engine by running at least the second half of the ramped-modal cycle, based on the number of test modes. For example, for the five-mode cycle specified in 40 CFR 1039.505(b)(1), the second half of the cycle consists of modes three through five. We will precondition your engine by running one complete ramped-modal cycle. Do not shut down the engine between cycles. Immediately after completing each preconditioning cycle, start the next cycle (including the emission test) as soon as practical. For any repeat cycles, start the next cycle within 60 seconds after completing the last preconditioning cycle. See §1065.530(a)(1)(iii) for additional instructions if the cycle begins and ends under different operating conditions.

(d) You may conduct calibrations or verifications on any idle equipment or analyzers during engine preconditioning.

[79 FR 23774, Apr. 28, 2014]

§1065.520 Pre-test verification procedures and pre-test data collection.

(a) For tests in which you measure PM emissions, follow the procedures for PM sample preconditioning and tare weighing according to §1065.590.

(b) Unless the standard-setting part specifies different tolerances, verify at some point before the test that ambient conditions are within the tolerances specified in this paragraph (b). For purposes of this paragraph (b), ''before the test'' means any time from a point just prior to engine starting (excluding engine restarts) to the point at which emission sampling begins.

(1) Ambient temperature of (20 to 30) °C. See §1065.530(j) for circumstances under which ambient temperatures

must remain within this range during the test.

(2) Atmospheric pressure of (80.000 to 103.325) kPa and within ±5 kPa of the value recorded at the time of the last engine map. You are not required to verify atmospheric pressure prior to a hot start test interval for testing that also includes a cold start.

(3) Dilution air conditions as specified in §1065.140, except in cases where you preheat your CVS before a cold start test. We recommend verifying dilution air conditions just prior to the start of each test interval.

(c) You may test engines at any intake-air humidity, and we may test engines at any intake-air humidity.

(d) Verify that auxiliary-work inputs and outputs are configured as they were during engine mapping, as described in §1065.510(a).

(e) You may perform a final calibration of the speed, torque, and proportional-flow control systems, which may include performing practice duty cycles (or portions of duty cycles). This may be done in conjunction with the preconditioning in §1065.518.

(f) Verify the amount of nonmethane hydrocarbon contamination in the exhaust and background HC sampling systems within 8 hours before the start of the first test interval of each duty-cycle sequence for laboratory tests. You may verify the contamination of a background HC sampling system by reading the last bag fill and purge using zero gas. For any NMHC measurement system that involves separately measuring CH_4 and subtracting it from a THC measurement or for any CH_4 measurement system that uses an NMC, verify the amount of THC contamination using only the THC analyzer response. There is no need to operate any separate CH_4 analyzer for this verification; however, you may measure and correct for THC contamination in the CH_4 sample path for the cases where NMHC is determined by subtracting CH_4 from THC or, where CH_4 is determined, using an NMC as configured in §1065.365(d), (e), and (f); and using the calculations in §1065.660(b)(2). Perform this verification as follows:

(1) Select the HC analyzer range for measuring the flow-weighted mean concentration expected at the HC standard.

(2) Zero the HC analyzer at the analyzer zero or sample port. Note that FID zero and span balance gases may be any combination of purified air or purified nitrogen that meets the specifications of §1065.750. We recommend FID analyzer zero and span gases that contain approximately the flow-weighted mean concentration of O_2 expected during testing.

(3) Span the HC analyzer using span gas introduced at the analyzer span or sample port. Span on a carbon number basis of one (C_1). For example, if you use a C_3H_8 span gas of concentration 200 μmol/mol, span the FID to respond with a value of 600 μmol/mol.

(4) Overflow zero gas at the HC probe inlet or into a tee near the probe outlet.

(5) Measure the THC concentration in the sampling and background systems as follows:

(i) For continuous sampling, record the mean THC concentration as overflow zero gas flows.

(ii) For batch sampling, fill the sample medium (e.g., bag) and record its mean THC concentration.

(iii) For the background system, record the mean THC concentration of the last fill and purge.

(6) Record this value as the initial THC concentration, $x_{THC[THC\text{-}FID]init}$, and use it to correct measured values as described in §1065.660.

(7) You may correct the measured initial THC concentration for drift as follows:

(i) For batch and continuous HC analyzers, after determining the initial THC concentration, flow zero gas to the analyzer zero or sample port. When the analyzer reading is stable, record the mean analyzer value.

(ii) Flow span gas to the analyzer span or sample port. When the analyzer reading is stable, record the mean analyzer value.

(iii) Use mean analyzer values from paragraphs (f)(2), (f)(3), (f)(7)(i), and (f)(7)(ii) of this section to correct the initial THC concentration recorded in paragraph (f)(6) of this section for drift, as described in §1065.550.

(8) If any of the $x_{THC[THC\text{-}FID]init}$ values exceed the greatest of the following

values, determine the source of the contamination and take corrective action, such as purging the system during an additional preconditioning cycle or replacing contaminated portions:

(i) 2% of the flow-weighted mean concentration expected at the HC (THC or NMHC) standard.

(ii) 2% of the flow-weighted mean concentration of HC (THC or NMHC) measured during testing.

(iii) 2 μmol/mol.

(9) If corrective action does not resolve the deficiency, you may request to use the contaminated system as an alternate procedure under § 1065.10.

[79 FR 23775, Apr. 28, 2014]

§ 1065.525 Engine starting, restarting, and shutdown.

(a) For test intervals that require emission sampling during engine starting, start the engine using one of the following methods:

(1) Start the engine as recommended in the owners manual using a production starter motor or air-start system and either an adequately charged battery, a suitable power supply, or a suitable compressed air source.

(2) Use the dynamometer to start the engine. To do this, motor the engine within ±25% of its typical in-use cranking speed. Stop cranking within 1 second of starting the engine.

(3) In the case of hybrid engines, activate the system such that the engine will start when its control algorithms determine that the engine should provide power instead of or in addition to power from the RESS. Unless we specify otherwise, engine starting throughout this part generally refers to this step of activating the system on hybrid engines, whether or not that causes the engine to start running.

(b) If the engine does not start after 15 seconds of cranking, stop cranking and determine why the engine failed to start, unless the owners manual or the service-repair manual describes the longer cranking time as normal.

(c) Respond to engine stalling with the following steps:

(1) If the engine stalls during warm-up before emission sampling begins, restart the engine and continue warm-up.

(2) If the engine stalls during preconditioning before emission sampling begins, restart the engine and restart the preconditioning sequence.

(3) Void the entire test if the engine stalls at any time after emission sampling begins, except as described in § 1065.526. If you do not void the entire test, you must void the individual test mode or test interval in which the engine stalls.

(d) Shut down the engine according to the manufacturer's specifications.

[73 FR 37320, June 30, 2008, as amended at 75 FR 68463, Nov. 8, 2010; 76 FR 57451, Sept. 15, 2011]

§ 1065.526 Repeating of void modes or test intervals.

(a) Test modes and test intervals can be voided because of instrument malfunction, engine stalling, emissions exceeding instrument ranges, and other unexpected deviations from the specified procedures. This section specifies circumstances for which a test mode or test interval can be repeated without repeating the entire test.

(b) This section is intended to result in replicate test modes and test intervals that are identical to what would have occurred if the cause of the voiding had not occurred. It does not allow you to repeat test modes or test intervals in any circumstances that would be inconsistent with good engineering judgment. For example, the procedures specified here for repeating a mode or interval may not apply for certain engines that include hybrid energy storage features or emission controls that involve physical or chemical storage of pollutants. This section applies for circumstances in which emission concentrations exceed the analyzer range only if it is due to operator error or analyzer malfunction. It does not apply for circumstances in which the emission concentrations exceed the range because they were higher than expected.

(c) If one of the modes of a discrete-mode duty cycle is voided while running the duty cycle as provided in this section, you may void the results for that individual mode and continue the duty cycle as follows:

(1) If the engine has stalled or been shut down, restart the engine.

(2) Use good engineering judgment to restart the duty cycle using the appropriate steps in § 1065.530(b).

(3) Stabilize the engine by operating it at the mode at which the duty cycle was interrupted and continue with the duty cycle as specified in the standard-setting part.

(d) If an individual mode of a discrete-mode duty cycle sequence is voided after running the full duty cycle, you may void results for that mode and repeat testing for that mode as follows:

(1) Use good engineering judgment to restart the test sequence using the appropriate steps in § 1065.530(b).

(2) Stabilize the engine by operating it at that mode.

(3) Sample emissions over an appropriate test interval.

(4) If you sampled gaseous and PM emissions over separate test intervals for a voided mode, you must void both test intervals and repeat sampling of both gaseous and PM emissions for that mode.

(e) If a transient or ramped-modal cycle test interval is voided as provided in this section, you may repeat the test interval as follows:

(1) Use good engineering judgment to restart (as applicable) and precondition the engine to the same condition as would apply for normal testing. This may require you to complete the voided test interval. For example, you may generally repeat a hot-start test of a heavy-duty highway engine after completing the voided hot-start test and allowing the engine to soak for 20 minutes.

(2) Complete the remainder of the test according to the provisions in this subpart.

(f) Keep records from the voided test mode or test interval in the same manner as required for unvoided tests.

[79 FR 23776, Apr. 28, 2014]

§ 1065.530 Emission test sequence.

(a) Time the start of testing as follows:

(1) Perform one of the following if you precondition the engine as described in § 1065.518:

(i) For cold-start duty cycles, shut down the engine. Unless the standard-setting part specifies that you may only perform a natural engine cooldown, you may perform a forced engine cooldown. Use good engineering judgment to set up systems to send cooling air across the engine, to send cool oil through the engine lubrication system, to remove heat from coolant through the engine cooling system, and to remove heat from any exhaust aftertreatment systems. In the case of a forced aftertreatment cooldown, good engineering judgment would indicate that you not start flowing cooling air until the aftertreatment system has cooled below its catalytic activation temperature. For platinum-group metal catalysts, this temperature is about 200 °C. Once the aftertreatment system has naturally cooled below its catalytic activation temperature, good engineering judgment would indicate that you use clean air with a temperature of at least 15 °C, and direct the air through the aftertreatment system in the normal direction of exhaust flow. Do not use any cooling procedure that results in unrepresentative emissions (see § 1065.10(c)(1)). You may start a cold-start duty cycle when the temperatures of an engine's lubricant, coolant, and aftertreatment systems are all between (20 and 30) °C.

(ii) For hot-start emission measurements, shut down the engine immediately after completing the last preconditioning cycle. For any repeat cycles, start the hot-start transient emission test within 60 seconds after completing the last preconditioning cycle (this is optional for manufacturer testing).

(iii) For testing that involves hot-stabilized emission measurements, such as any steady-state testing with a ramped-modal cycle, start the hot-stabilized emission test within 60 seconds after completing the last preconditioning cycle (the time between cycles is optional for manufacturer testing). If the hot-stabilized cycle begins and ends with different operating conditions, add a linear transition period of 20 seconds between hot-stabilized cycles where you linearly ramp the (denormalized) reference speed and torque values over the transition period. See § 1065.501(c)(2)(i) for discrete-mode cycles.

(2) If you do not precondition the engine as described in §1065.518, perform one of the following:

(i) For cold-start duty cycles, prepare the engine according to paragraph (a)(1)(i) of this section.

(ii) For hot-start duty cycles, first operate the engine at any speed above peak-torque speed and at (65 to 85) % of maximum mapped power until either the engine coolant, block, or head absolute temperature is within ±2% of its mean value for at least 2 min or until the engine thermostat controls engine temperature. Shut down the engine. Start the duty cycle within 20 min of engine shutdown.

(iii) For testing that involves hot-stabilized emission measurements, bring the engine either to warm idle or the first operating point of the duty cycle. Start the test within 10 min of achieving temperature stability. Determine temperature stability either as the point at which the engine coolant, block, or head absolute temperature is within ±2% of its mean value for at least 2 min, or as the point at which the engine thermostat controls engine temperature.

(b) Take the following steps before emission sampling begins:

(1) For batch sampling, connect clean storage media, such as evacuated bags or tare-weighed filters.

(2) Start all measurement instruments according to the instrument manufacturer's instructions and using good engineering judgment.

(3) Start dilution systems, sample pumps, cooling fans, and the data-collection system.

(4) Pre-heat or pre-cool heat exchangers in the sampling system to within their operating temperature tolerances for a test.

(5) Allow heated or cooled components such as sample lines, filters, chillers, and pumps to stabilize at their operating temperatures.

(6) Verify that there are no significant vacuum-side leaks according to §1065.345.

(7) Adjust the sample flow rates to desired levels, using bypass flow, if desired.

(8) Zero or re-zero any electronic integrating devices, before the start of any test interval.

(9) Select gas analyzer ranges. You may automatically or manually switch gas analyzer ranges during a test only if switching is performed by changing the span over which the digital resolution of the instrument is applied. During a test you may not switch the gains of an analyzer's analog operational amplifier(s).

(10) Zero and span all continuous analyzers using NIST-traceable gases that meet the specifications of §1065.750. Span FID analyzers on a carbon number basis of one (1), C_1. For example, if you use a C_3H_8 span gas of concentration 200 μmol/mol, span the FID to respond with a value of 600 μmol/mol. Span FID analyzers consistent with the determination of their respective response factors, *RF*, and penetration fractions, *PF*, according to §1065.365.

(11) We recommend that you verify gas analyzer responses after zeroing and spanning by sampling a calibration gas that has a concentration near one-half of the span gas concentration. Based on the results and good engineering judgment, you may decide whether or not to re-zero, re-span, or re-calibrate a gas analyzer before starting a test.

(12) Drain any accumulated condensate from the intake air system before starting a duty cycle, as described in §1065.125(e)(1). If engine and aftertreatment preconditioning cycles are run before the duty cycle, treat the preconditioning cycles and any associated soak period as part of the duty cycle for the purpose of opening drains and draining condensate. Note that you must close any intake air condensate drains that are not representative of those normally open during in-use operation.

(c) Start and run each test interval as described in this paragraph (c). The procedure varies depending on whether the test interval is part of a discrete-mode cycle, and whether the test interval includes engine starting. Note that the standard-setting part may apply different requirements for running test intervals. For example, 40 CFR part 1033 specifies a different way to perform discrete-mode testing.

(1) For steady-state discrete-mode duty cycles, start the duty cycle with

the engine warmed-up and running as described in § 1065.501(c)(2)(i). Run each mode in the sequence specified in the standard-setting part. This will require controlling engine speed, engine load, or other operator demand settings as specified in the standard-setting part. Simultaneously start any electronic integrating devices, continuous data recording, and batch sampling. We recommend that you stabilize the engine for at least 5 minutes for each mode. Once sampling begins, sample continuously for at least 1 minute. Note that longer sample times may be needed for accurately measuring very low emission levels.

(2) For transient and steady-state ramped-modal duty cycles that do not include engine starting, start the test interval with the engine running as soon as practical after completing engine preconditioning. Simultaneously start any electronic integrating devices, continuous data recording, batch sampling, and execution of the duty cycle.

(3) If engine starting is part of the test interval, simultaneously start any electronic integrating devices, continuous data recording, and batch sampling before attempting to start the engine. Initiate the sequence of points in the duty cycle when the engine starts.

(4) For batch sampling systems, you may advance or delay the start and end of sampling at the beginning and end of the test interval to improve the accuracy of the batch sample, consistent with good engineering judgment.

(d) At the end of each test interval, continue to operate all sampling and dilution systems to allow the sampling system's response time to elapse. Then stop all sampling and recording, including the recording of background samples. Finally, stop any integrating devices and indicate the end of the duty cycle in the recorded data.

(e) Shut down the engine if you have completed testing or if it is part of the duty cycle.

(f) If testing involves another duty cycle after a soak period with the engine off, start a timer when the engine shuts down, and repeat the steps in paragraphs (b) through (e) of this section as needed.

(g) Take the following steps after emission sampling is complete:

(1) For any proportional batch sample, such as a bag sample or PM sample, verify that proportional sampling was maintained according to § 1065.545. Void any samples that did not maintain proportional sampling according to § 1065.545.

(2) Place any used PM samples into covered or sealed containers and return them to the PM-stabilization environment. Follow the PM sample post-conditioning and total weighing procedures in § 1065.595.

(3) As soon as practical after the duty cycle is complete, or during the soak period if practical, perform the following:

(i) Zero and span all batch gas analyzers no later than 30 minutes after the duty cycle is complete, or during the soak period if practical.

(ii) Analyze any conventional gaseous batch samples no later than 30 minutes after the duty cycle is complete, or during the soak period if practical.

(iii) Analyze background samples no later than 60 minutes after the duty cycle is complete.

(iv) Analyze non-conventional gaseous batch samples, such as ethanol (NMHCE) as soon as practical using good engineering judgment.

(4) After quantifying exhaust gases, verify drift as follows:

(i) For batch and continuous gas analyzers, record the mean analyzer value after stabilizing a zero gas to the analyzer. Stabilization may include time to purge the analyzer of any sample gas, plus any additional time to account for analyzer response.

(ii) Record the mean analyzer value after stabilizing the span gas to the analyzer. Stabilization may include time to purge the analyzer of any sample gas, plus any additional time to account for analyzer response.

(iii) Use these data to validate and correct for drift as described in § 1065.550.

(h) Unless the standard-setting part specifies otherwise, determine whether or not the test meets the cycle-validation criteria in § 1065.514.

(1) If the criteria void the test, you may retest using the same

denormalized duty cycle, or you may re-map the engine, denormalize the reference duty cycle based on the new map and retest the engine using the new denormalized duty cycle.

(2) If the criteria void the test for a constant-speed engine only during commands of maximum test torque, you may do the following:

(i) Determine the first and last feedback speeds at which maximum test torque was commanded.

(ii) If the last speed is greater than or equal to 90% of the first speed, the test is void. You may retest using the same denormalized duty cycle, or you may re-map the engine, denormalize the reference duty cycle based on the new map and retest the engine using the new denormalized duty cycle.

(iii) If the last speed is less than 90% of the first speed, reduce maximum test torque by 5%, and proceed as follows:

(A) Denormalize the entire duty cycle based on the reduced maximum test torque according to § 1065.512.

(B) Retest the engine using the denormalized test cycle that is based on the reduced maximum test torque.

(C) If your engine still fails the cycle criteria, reduce the maximum test torque by another 5% of the original maximum test torque.

(D) If your engine fails after repeating this procedure four times, such that your engine still fails after you have reduced the maximum test torque by 20% of the original maximum test torque, notify us and we will consider specifying a more appropriate duty cycle for your engine under the provisions of § 1065.10(c).

(i) [Reserved]

(j) Measure and record ambient temperature, pressure, and humidity, as appropriate. For testing the following engines, you must record ambient temperature continuously to verify that it remains within the pre-test temperature range as specified in § 1065.520(b):

(1) Air-cooled engines.

(2) Engines equipped with auxiliary emission control devices that sense and respond to ambient temperature.

(3) Any other engine for which good engineering judgment indicates this is necessary to remain consistent with § 1065.10(c)(1).

[73 FR 37321, June 30, 2008, as amended at 75 FR 23043, Apr. 30, 2010; 76 FR 57451, Sept. 15, 2011; 79 FR 23776, Apr. 28, 2014]

EFFECTIVE DATE NOTE: At 86 FR 34546, June 29, 2021, § 1065.530 was amended, effective July 29, 2021.

§ 1065.543 Carbon balance error verification.

(a) Carbon balance error verification compares independently calculated quantities of carbon flowing into and out of an engine system. The engine system includes aftertreatment devices as applicable. Calculating carbon intake considers carbon-carrying streams flowing into the system, including intake air, fuel, and optionally DEF or other fluids. Carbon flow out of the system comes from exhaust emission calculations. Note that this verification is not valid if you calculate exhaust molar flow rate using fuel rate and chemical balance as described in § 1065.655(f)(3) because carbon flows into and out of the system are not independent. Use good engineering judgment to ensure that carbon mass in and carbon mass out data signals align.

(b) Perform the carbon balance error verification after emission sampling is complete for a test interval or duty cycle as described in § 1065.530(g). Testing must include measured values as needed to determine intake air, fuel flow, and carbon-related gaseous exhaust emissions. You may optionally account for the flow of carbon-carrying fluids other than intake air and fuel into the system. Perform carbon balance error verification as follows:

(1) Calculate carbon balance error quantities as described in § 1065.643. The three quantities for individual test intervals are carbon mass absolute error, ε_{aC}, carbon mass rate absolute error, ε_{aCrate}, and carbon mass relative error, ε_{rC}. Determine ε_{aC}, ε_{aCrate}, and ε_{rC} for all test intervals. You may determine composite carbon mass relative error, εrCcomp, as a fourth quantity that optionally applies for duty cycles with multiple test intervals.

(2) You meet verification criteria for an individual test interval if the absolute values of carbon balance error

quantities are at or below the following limit values:

(i) Calculate the carbon mass absolute error limit, $L\varepsilon_{aC}$, in grams to three decimal places for comparision to the absolute value of $\varepsilon_{\cong aC}$, using the following equation:

$$L_{\epsilon aC} = c \cdot P_{max}$$

Eq. 1065.543-1

Where:

c = power-specific carbon mass absolute error coefficient = 0.007 g/kW.

P_{max} = maximum power from the engine map generated according to §1065.510. If measured

P_{max} is not available, use a manufacturer-declared value for P_{max}.

Example:

c = 0.007 g/kW

P_{max} = 230.0 kW

$L_{\grave{o}aC}$ = 0.007 · 230.0 = 1.610 g

(ii) Calculate the carbon mass rate absolute error limit, $L\varepsilon_{aCrate}$, in grams per hour to three decimal places for comparison to the absolute value of ε_{aCrate}, using the following equation:

$$L_{\epsilon aCrate} = d \cdot P_{max}$$

Eq. 1065.543-2

Where:

d = power-specific carbon mass rate absolute error coefficient = 0.31 g/(kW · hr).

P_{max} = maximum power from the engine map generated according to §1065.510. If measured

P_{max} is not available, use a manufacturer-declared value for P_{max}.

Example:

d = 0.31 g/(kW·hr)

P_{max} = 230.0 kW

$L\varepsilon_{aCrate}$ = 71.300 g/hr

(iii) The carbon mass relative error limit,

$L\varepsilon_{rC}$, is 0.020 for comparision to the absolute value of ε_{rC}, and optionally the absolute value of ε_{rCcomp}.

(c) A failed carbon balance error verification might indicate one or more problems requiring corrective action, as follows:

TABLE 1 OF § 1065.543—TROUBLESHOOTING GUIDE FOR CARBON BALANCE ERROR VERIFICATION

Area of concern	Problem	Recommended corrective action
Gas analyzer system	Incorrect analyzer calibration	Calibrate NDIR and THC analyzers.
	Incorrect time alignment between flow and concentration data.	Determine transformation time, t_{50}, for continuous gas analyzers and time-align flow and concentration data as described in § 1065.650(c)(2)(i).
	Problems with the sample system	Inspect sample system components such as sample lines, filters, chillers, and pumps for leaks, operating temperature, and contamination.
Fuel flow measurement	Zero shift of fuel flow rate meter	Perform an in-situ zero adjustment.
	Change in fuel flow meter calibration	Calibrate the fuel flow meter as described in § 1065.320.
	Incorrect time alignment of fuel flow data	Verify alignment of carbon mass in and carbon mass out data streams.
	Short sampling periods	For test intervals with varying duration, such as discrete-mode steady-state duty cycles, make the test intervals longer to improve accuracy when measuring low fuel flow rates.
	Fluctuations in the fuel conditioning system	Improve stability of the fuel temperature and pressure conditioning system to improve accuracy when measuring low fuel flow rates.
Dilute testing using a CVS system	Leaks	Inspect exhaust system and CVS tunnel, connections, and fasteners. Repair or replace components as needed. A leak in the exhaust transfer tube to the CVS may result in negative values for carbon balance error.
	Poor mixing	Perform the verification related to mixing in § 1065.341(f).
	Change in CVS calibration	Calibrate the CVS flow meter as described in § 1065.340.
	Flow meter entrance effects	Inspect the CVS tunnel to determine whether entrance effects from the piping configuration upstream of the flow meter adversely affect flow measurement.
	Other problems with the CVS or sampling verification hardware or software.	Inspect hardware and software for the CVS system and CVS verification system for discrepancies.
Raw testing using intake air flow measurement or direct exhaust flow measurement.	Leaks	Inspect intake air and exhaust systems, connections, fasteners. Repair or replace components as needed.
	Zero shift of intake air flow rate meter	Perform an in-situ zero adjustment.
	Change in intake air flow meter calibration	Calibrate the intake air flow meter as described in § 1065.325.
	Zero shift of exhaust flow rate meter	Perform an in-situ zero adjustment.
	Change in exhaust flow meter calibration	Calibrate the exhaust flow meter as described in § 1065.330.
	Flow meter entrance effects	Inspect intake air and exhaust systems to determine whether entrance effects from the piping configuration upstream and downstream of the intake air flow meter or the exhaust flow meter adversely affect flow measurement.
	Other problems with the intake air flow and exhaust flow measurement hardware or software.	Look for discrepancies in the hardware and software for measuring intake air flow and exhaust flow.
	Poor mixing	Ensure that all streams are well mixed.
Accuracy of fluid properties	Inaccurate fluid properties	If defaults are used, use measured values. If measured values are used, verify fluid property determination.

EFFECTIVE DATE NOTE: At 86 FR 34547, June 29, 2021, § 1065.543 was added, effective July 29, 2021.

§ 1065.545 Verification of proportional flow control for batch sampling.

For any proportional batch sample such as a bag or PM filter, demonstrate that proportional sampling was maintained using one of the following, noting that you may omit up to 5% of the total number of data points as outliers:

(a) For any pair of flow rates, use recorded sample and total flow rates, where total flow rate means the raw exhaust flow rate for raw exhaust sampling and the dilute exhaust flow rate for CVS sampling, or their 1 Hz means with the statistical calculations in § 1065.602. Determine the standard error of the estimate, *SEE*, of the sample flow rate versus the total flow rate. For each test interval, demonstrate that *SEE* was less than or equal to 3.5% of the mean sample flow rate.

(b) For any pair of flow rates, use recorded sample and total flow rates, where total flow rate means the raw exhaust flow rate for raw exhaust sampling and the dilute exhaust flow rate for CVS sampling, or their 1 Hz means to demonstrate that each flow rate was constant within ±2.5% of its respective mean or target flow rate. You may use the following options instead of recording the respective flow rate of each type of meter:

(1) *Critical-flow venturi option.* For critical-flow venturis, you may use recorded venturi-inlet conditions or their 1 Hz means. Demonstrate that the flow density at the venturi inlet was constant within ±2.5% of the mean or target density over each test interval. For a CVS critical-flow venturi, you may demonstrate this by showing that the absolute temperature at the venturi inlet was constant within ±4% of the mean or target absolute temperature over each test interval.

(2) *Positive-displacement pump option.* You may use recorded pump-inlet conditions or their 1 Hz means. Demonstrate that the flow density at the pump inlet was constant within ±2.5% of the mean or target density over each test interval. For a CVS pump, you may demonstrate this by showing that the absolute temperature at the pump inlet was constant within ±2% of the mean or target absolute temperature over each test interval.

(c) Using good engineering judgment, demonstrate with an engineering analysis that the proportional-flow control system inherently ensures proportional sampling under all circumstances expected during testing. For example, you might use CFVs for both sample flow and total dilute exhaust (CVS) flow and demonstrate that they always have the same inlet pressures and temperatures and that they always operate under critical-flow conditions.

[79 FR 23777, Apr. 28, 2014]

EFFECTIVE DATE NOTE: At 86 FR 34548, June 29, 2021, § 1065.545 was amended, effective July 29, 2021.

§ 1065.546 Verification of minimum dilution ratio for PM batch sampling.

Use continuous flows and/or tracer gas concentrations for transient and ramped-modal cycles to verify the minimum dilution ratios for PM batch sampling as specified in § 1065.140(e)(2) over the test interval. You may use mode-average values instead of continuous measurements for discrete mode steady-state duty cycles. Determine the minimum primary and minimum overall dilution ratios using one of the following methods (you may use a different method for each stage of dilution):

(a) Determine minimum dilution ratio based on molar flow data. This involves determination of at least two of the following three quantities: raw exhaust flow (or previously diluted flow), dilution air flow, and dilute exhaust flow. You may determine the raw exhaust flow rate based on the measured intake air or fuel flow rate and the raw exhaust chemical balance terms as given in § 1065.655(f). You may determine the raw exhaust flow rate based on the measured intake air and dilute exhaust molar flow rates and the dilute exhaust chemical balance terms as given in § 1065.655(g). You may alternatively estimate the molar raw exhaust flow rate based on intake air, fuel rate measurements, and fuel properties, consistent with good engineering judgment.

(b) Determine minimum dilution ratio based on tracer gas (*e.g.*, CO_2)

concentrations in the raw (or previously diluted) and dilute exhaust corrected for any removed water.

(c) Use good engineering judgment to develop your own method of determining dilution ratios.

[75 FR 23043, Apr. 30, 2010, as amended at 76 FR 57451, Sept. 15, 2011; 79 FR 23778, Apr. 28, 2014; 81 FR 74169, Oct. 25, 2016]

§ 1065.550 Gas analyzer range verification and drift verification.

(a) *Range verification*. If an analyzer operated above 100% of its range at any time during the test, perform the following steps:

(1) For batch sampling, re-analyze the sample using the lowest analyzer range that results in a maximum instrument response below 100%. Report the result from the lowest range from which the analyzer operates below 100% of its range.

(2) For continuous sampling, repeat the entire test using the next higher analyzer range. If the analyzer again operates above 100% of its range, repeat the test using the next higher range. Continue to repeat the test until the analyzer always operates at less than 100% of its range.

(b) *Drift verification*. Gas analyzer drift verification is required for all gaseous exhaust constituents for which an emission standard applies. It is also required for CO_2 even if there is no CO_2 emission standard. It is not required for other gaseous exhaust constituents for which only a reporting requirement applies (such as CH_4 and N_2O).

(1) Verify drift using one of the following methods:

(i) For regulated exhaust constituents determined from the mass of a single component, perform drift verification based on the regulated constituent. For example, when NO_X mass is determined with a dry sample measured with a CLD and the removed water is corrected based on measured CO_2, CO, THC, and NO_X concentrations, you must verify the calculated NO_X value.

(ii) For regulated exhaust constituents determined from the masses of multiple subcomponents, perform the drift verification based on either the regulated constituent or all the mass subcomponents. For example, when NO_X is measured with separate NO and NO_2 analyzers, you must verify either the NO_X value or both the NO and NO_2 values.

(iii) For regulated exhaust constituents determined from the concentrations of multiple gaseous emission subcomponents prior to performing mass calculations, perform drift verification on the regulated constituent. You may not verify the concentration subcomponents (e.g., THC and CH_4 for NMHC) separately. For example, for NMHC measurements, perform drift verification on NMHC; do not verify THC and CH_4 separately.

(2) Drift verification requires two sets of emission calculations. For each set of calculations, include all the constituents in the drift verification. Calculate one set using the data before drift correction and calculate the other set after correcting all the data for drift according to § 1065.672. Note that for purposes of drift verification, you must leave unaltered any negative emission results over a given test interval (i.e., do not set them to zero). These unaltered results are used when verifying either test interval results or composite brake-specific emissions over the entire duty cycle for drift. For each constituent to be verified, both sets of calculations must include the following:

(i) Calculated mass (or mass rate) emission values over each test interval.

(ii) If you are verifying each test interval based on brake-specific values, calculate brake-specific emission values over each test interval.

(iii) If you are verifying over the entire duty cycle, calculate composite brake-specific emission values.

(3) The duty cycle is verified for drift if you satisfy the following criteria:

(i) For each regulated gaseous exhaust constituent, you must satisfy one of the following:

(A) For each test interval of the duty cycle, the difference between the uncorrected and the corrected brake-specific emission values of the regulated constituent must be within ±4% of the uncorrected value or the applicable emissions standard, whichever is greater. Alternatively, the difference between the uncorrected and the corrected emission mass (or mass rate)

values of the regulated constituent must be within ±4% of the uncorrected value or the composite work (or power) multiplied by the applicable emissions standard, whichever is greater. For purposes of verifying each test interval, you may use either the reference or actual composite work (or power).

(B) For each test interval of the duty cycle and for each mass subcomponent of the regulated constituent, the difference between the uncorrected and the corrected brake-specific emission values must be within ±4% of the uncorrected value. Alternatively, the difference between the uncorrected and the corrected emissions mass (or mass rate) values must be within ±4% of the uncorrected value.

(C) For the entire duty cycle, the difference between the uncorrected and the corrected composite brake-specific emission values of the regulated constituent must be within ±4% of the uncorrected value or applicable emission standard, whichever is greater.

(D) For the entire duty cycle and for each subcomponent of the regulated constituent, the difference between the uncorrected and the corrected composite brake-specific emission values must be within ±4% of the uncorrected value.

(ii) Where no emission standard applies for CO_2, you must satisfy one of the following:

(A) For each test interval of the duty cycle, the difference between the uncorrected and the corrected brake-specific CO_2 values must be within ±4% of the uncorrected value; or the difference between the uncorrected and the corrected CO_2 mass (or mass rate) values must be within ±4% of the uncorrected value.

(B) For the entire duty cycle, the difference between the uncorrected and the corrected composite brake-specific CO_2 values must be within ±4% of the uncorrected value.

(4) If the test is not verified for drift as described in paragraph (b)(1) of this section, you may consider the test results for the duty cycle to be valid only if, using good engineering judgment, the observed drift does not affect your ability to demonstrate compliance with the applicable emission standards. For example, if the drift-corrected value is less than the standard by at least two times the absolute difference between the uncorrected and corrected values, you may consider the data to be verified for demonstrating compliance with the applicable standard.

[79 FR 23778, Apr. 28, 2014]

§ 1065.590 PM sampling media (e.g., filters) preconditioning and tare weighing.

Before an emission test, take the following steps to prepare PM sampling media (e.g., filters) and equipment for PM measurements:

(a) Make sure the balance and PM-stabilization environments meet the periodic verifications in § 1065.390.

(b) Visually inspect unused sample media (e.g., filters) for defects and discard defective media.

(c) To handle PM sampling media (e.g., filters), use electrically grounded tweezers or a grounding strap, as described in § 1065.190.

(d) Place unused sample media (e.g., filters) in one or more containers that are open to the PM-stabilization environment. If you are using filters, you may place them in the bottom half of a filter cassette.

(e) Stabilize sample media (e.g., filters) in the PM-stabilization environment. Consider an unused sample medium stabilized as long as it has been in the PM-stabilization environment for a minimum of 30 min, during which the PM-stabilization environment has been within the specifications of § 1065.190.

(f) Weigh the sample media (e.g., filters) automatically or manually, as follows:

(1) For automatic weighing, follow the automation system manufacturer's instructions to prepare samples for weighing. This may include placing the samples in a special container.

(2) Use good engineering judgment to determine if substitution weighing is necessary to show that an engine meets the applicable standard. You may follow the substitution weighing procedure in paragraph (j) of this section, or you may develop your own procedure.

(g) Correct the measured mass of each sample medium (e.g., filter) for buoyancy as described in § 1065.690.

These buoyancy-corrected values are subsequently subtracted from the post-test mass of the corresponding sample media (e.g., filters) and collected PM to determine the mass of PM emitted during the test.

(h) You may repeat measurements to determine the mean mass of each sample medium (e.g., filter). Use good engineering judgment to exclude outliers from the calculation of mean mass values.

(i) If you use filters as sample media, load unused filters that have been tare-weighed into clean filter cassettes and place the loaded cassettes in a clean, covered or sealed container before removing them from the stabilization environment for transport to the test site for sampling. We recommend that you keep filter cassettes clean by periodically washing or wiping them with a compatible solvent applied using a lint-free cloth. Depending upon your cassette material, ethanol (C_2H_5OH) might be an acceptable solvent. Your cleaning frequency will depend on your engine's level of PM and HC emissions.

(j) Substitution weighing involves measurement of a reference weight before and after each weighing of the PM sampling medium (*e.g.*, the filter). While substitution weighing requires more measurements, it corrects for a balance's zero-drift and it relies on balance linearity only over a small range. This is most advantageous when quantifying net PM masses that are less than 0.1% of the sample medium's mass. However, it may not be advantageous when net PM masses exceed 1% of the sample medium's mass. If you utilize substitution weighing, it must be used for both pre-test and post-test weighing. The same substitution weight must be used for both pre-test and post-test weighing. Correct the mass of the substitution weight for buoyancy if the density of the substitution weight is less than 2.0 g/cm^3. The following steps are an example of substitution weighing:

(1) Use electrically grounded tweezers or a grounding strap, as described in § 1065.190.

(2) Use a static neutralizer as described in § 1065.190 to minimize static electric charge on any object before it is placed on the balance pan.

(3) Select and weigh a substitution weight that meets the requirements for calibration weights found in § 1065.790. The substitution weight must also have the same density as the weight you use to span the microbalance, and be similar in mass to an unused sample medium (*e.g.*, filter). A 47 mm PTFE membrane filter will typically have a mass in the range of 80 to 100 mg.

(4) Record the stable balance reading, then remove the substitution weight.

(5) Weigh an unused sample medium (*e.g.*, a new filter), record the stable balance reading and record the balance environment's dewpoint, ambient temperature, and atmospheric pressure.

(6) Reweigh the substitution weight and record the stable balance reading.

(7) Calculate the arithmetic mean of the two substitution-weight readings that you recorded immediately before and after weighing the unused sample. Subtract that mean value from the unused sample reading, then add the true mass of the substitution weight as stated on the substitution-weight certificate. Record this result. This is the unused sample's tare weight without correcting for buoyancy.

(8) Repeat these substitution-weighing steps for the remainder of your unused sample media.

(9) Once weighing is completed, follow the instructions given in paragraphs (g) through (i) of this section.

[73 FR 37323, June 30, 2008, as amended at 81 FR 74169, Oct. 25, 2016]

§ 1065.595 PM sample post-conditioning and total weighing.

After testing is complete, return the sample media (e.g., filters) to the weighing and PM-stabilization environments.

(a) Make sure the weighing and PM-stabilization environments meet the ambient condition specifications in § 1065.190(e)(1). If those specifications are not met, leave the test sample media (e.g., filters) covered until proper conditions have been met.

(b) In the PM-stabilization environment, remove PM samples from sealed containers. If you use filters, you may

remove them from their cassettes before or after stabilization. We recommend always removing the top portion of the cassette before stabilization. When you remove a filter from a cassette, separate the top half of the cassette from the bottom half using a cassette separator designed for this purpose.

(c) To handle PM samples, use electrically grounded tweezers or a grounding strap, as described in § 1065.190.

(d) Visually inspect the sampling media (e.g., filters) and collected particulate. If either the sample media (e.g., filters) or particulate sample appear to have been compromised, or the particulate matter contacts any surface other than the filter, the sample may not be used to determine particulate emissions. In the case of contact with another surface, clean the affected surface before continuing.

(e) To stabilize PM samples, place them in one or more containers that are open to the PM-stabilization environment, as described in § 1065.190. If you expect that a sample medium's (e.g., filter's) total surface concentration of PM will be less than 400 μg, assuming a 38 mm diameter filter stain area, expose the filter to a PM-stabilization environment meeting the specifications of § 1065.190 for at least 30 minutes before weighing. If you expect a higher PM concentration or do not know what PM concentration to expect, expose the filter to the stabilization environment for at least 60 minutes before weighing. Note that 400 μg on sample media (e.g., filters) is an approximate net mass of 0.07 g/kW · hr for a hot-start test with compression-ignition engines tested according to 40 CFR part 86, subpart N, or 50 mg/mile for light-duty vehicles tested according to 40 CFR part 86, subpart B.

(f) Repeat the procedures in § 1065.590(f) through (i) to determine post-test mass of the sample media (e.g., filters).

(g) Subtract each buoyancy-corrected tare mass of the sample medium (e.g., filter) from its respective buoyancy-corrected mass. The result is the net PM mass, m_{PM}. Use m_{PM} in emission calculations in § 1065.650.

[73 FR 37323, June 30, 2008]

Subpart G—Calculations and Data Requirements

§ 1065.601 Overview.

(a) This subpart describes how to—

(1) Use the signals recorded before, during, and after an emission test to calculate brake-specific emissions of each measured exhaust constituent.

(2) Perform calculations for calibrations and performance checks.

(3) Determine statistical values.

(b) You may use data from multiple systems to calculate test results for a single emission test, consistent with good engineering judgment. You may also make multiple measurements from a single batch sample, such as multiple weighings of a PM filter or multiple readings from a bag sample. Although you may use an average of multiple measurements from a single test, you may not use test results from multiple emission tests to report emissions.

(1) We allow weighted means where appropriate.

(2) You may discard statistical outliers, but you must report all results.

(3) For emission measurements related to durability testing, we may allow you to exclude certain test points other than statistical outliers relative to compliance with emission standards, consistent with good engineering judgment and normal measurement variability; however, you must include these results when calculating the deterioration factor. This would allow you to use durability data from an engine that has an intermediate test result above the standard that cannot be discarded as a statistical outlier, as long as good engineering judgment indicates that the test result does not represent the engine's actual emission level. Note that good engineering judgment would preclude you from excluding endpoints. Also, if normal measurement variability causes emission results below zero, include the negative result in calculating the deterioration factor to avoid an upward bias. These provisions related to durability testing are intended to address very stringent standards where measurement variability is large relative to the emission standard.

(c) You may use any of the following calculations instead of the calculations specified in this subpart G:

(1) Mass-based emission calculations prescribed by the International Organization for Standardization (ISO), according to ISO 8178, except the following:

(i) ISO 8178–1 Section 14.4, NO_X Correction for Humidity and Temperature. See §1065.670 for approved methods for humidity corrections.

(ii) ISO 8178–1 Section 15.1, Particulate Correction Factor for Humidity.

(2) Other calculations that you show are equivalent to within ±0.1% of the brake-specific emission results determined using the calculations specified in this subpart G.

[70 FR 40516, July 13, 2005, as amended at 73 FR 37324, June 30, 2008; 74 FR 56516, Oct. 30, 2009; 75 FR 23044, Apr. 30, 2010; 79 FR 23778, Apr. 28, 2014]

§ 1065.602 Statistics.

(a) *Overview*. This section contains equations and example calculations for statistics that are specified in this part. In this section we use the letter ''y'' to denote a generic measured quantity, the superscript over-bar ''–'' to denote an arithmetic mean, and the subscript ''$_{ref}$'' to denote the reference quantity being measured.

(b) *Arithmetic mean*. Calculate an arithmetic mean, $\bar{y}$, as follows:

$$\bar{y} = \frac{\sum_{i=1}^{N} y_i}{N} \qquad \text{Eq. 1065.602-1}$$

Example:
$N = 3$
$y_1 = 10.60$
$y_2 = 11.91$
$y_N = y_3 = 11.09$

$$\bar{y} = \frac{10.60 + 11.91 + 11.09}{3}$$

$\bar{y} = 11.20$

(c) *Standard deviation*. Calculate the standard deviation for a non-biased (e.g., N–1) sample, σ, as follows:

$$\sigma_y = \sqrt{\frac{\sum_{i=1}^{N} (y_i - \bar{y})^2}{(N-1)}} \qquad \text{Eq. 1065.602-2}$$

Example:
$N = 3$
$y_1 = 10.60$
$y_2 = 11.91$
$y_N = y_3 = 11.09$
$\bar{y} = 11.20$

$$\sigma_y = \sqrt{\frac{(10.60 - 11.2)^2 + (11.91 - 11.2)^2 + (11.09 - 11.2)^2}{2}}$$

$\sigma_y = 0.6619$

(d) *Root mean square*. Calculate a root mean square, rms_y, as follows:

$$\mathrm{rms_y} = \sqrt{\frac{1}{\mathrm{N}}\sum_{\mathrm{i=1}}^{\mathrm{N}} \mathrm{y_i}^2} \qquad \text{Eq. 1065.602-3}$$

Example:
$N = 3$
$y_1 = 10.60$
$y_2 = 11.91$
$y_N = y_3 = 11.09$

$$\mathrm{rms_y} = \sqrt{\frac{10.60 + 11.91^2 + 11.09^2}{3}}$$

$rms_y = 11.21$

(e) *Accuracy*. Determine accuracy as described in this paragraph (e). Make multiple measurements of a standard quantity to create a set of observed values, y_i, and compare each observed value to the known value of the standard quantity. The standard quantity may have a single known value, such as a gas standard, or a set of known values of negligible range, such as a known applied pressure produced by a calibration device during repeated applications. The known value of the standard quantity is represented by y_{ref_i}. If you use a standard quantity with a single value, y_{ref_i} would be constant. Calculate an accuracy value as follows:

$$accuracy = \left| \frac{1}{N}\sum_{\mathrm{i=1}}^{N}\left(y_{\mathrm{i}} - y_{\mathrm{ref_i}}\right) \right| \qquad \text{Eq. 1065.602-4}$$

Example:
$y_{ref} = 1800.0$
$N = 3$
$y_1 = 1806.4$
$y_2 = 1803.1$
$y_3 = 1798.9$

$$accuracy = \left| \frac{1}{3}((1806.4 - 1800.0) + (1803.1 - 1800.0) + (1798.9 - 1800.0)) \right|$$

$$accuracy = \left| \frac{1}{3}((6.4) + (3.1) + (-1.1)) \right|$$

$accuracy = 2.8$

(f) *t-test*. Determine if your data passes a *t*-test by using the following equations and tables:

(1) For an unpaired *t*-test, calculate the *t* statistic and its number of degrees of freedom, *v*, as follows:

$$t = \frac{\left|\overline{y}_{\text{ref}} - \overline{y}\right|}{\sqrt{\frac{\sigma_{\text{ref}}^2}{N_{\text{ref}}} + \frac{\sigma_{\text{y}}^2}{N}}}$$

Eq. 1065.602-5

$$v = \frac{\left(\frac{\sigma_{\text{ref}}^2}{N_{\text{ref}}} + \frac{\sigma_{\text{y}}^2}{N}\right)^2}{\frac{\left(\frac{\sigma_{\text{ref}}^2}{N_{\text{ref}}}\right)^2}{N_{\text{ref}} - 1} + \frac{\left(\frac{\sigma_{\text{y}}^2}{N}\right)^2}{N - 1}}$$

Eq. 1065.602-6

Example:

$\overline{y}_{\text{ref}} = 1205.3$

$\overline{y} = 1123.8$

$\sigma_{\text{ref}} = 9.399$

$\sigma_{\text{y}} = 10.583$

$N_{\text{ref}} = 11$

$N = 7$

$$t = \frac{\left|1205.3 - 1123.8\right|}{\sqrt{\frac{9.399^2}{11} + \frac{10.583^2}{7}}}$$

$t = 16.63$

(2) For a paired t-test, calculate the t statistic and its number of degrees of freedom, v, as follows, noting that the ε_i are the errors (*e.g.*, differences) between each pair of y_{refi} and y_i:

$\sigma_{ref} = 9.399$

$\sigma_y = 10.583$

$N_{ref} = 11$

$N = 7$

$$v = \frac{\left(\frac{9.399^2}{11} + \frac{10.583^2}{7}\right)^2}{\frac{\left(\frac{9.399^2}{11}\right)^2}{11-1} + \frac{\left(\frac{10.583^2}{7}\right)^2}{7-1}}$$

$v = 11.76$

(2) For a paired *t*-test, calculate the *t* statistic and its number of degrees of freedom, , as follows, noting that the ε_i are the errors (e.g., differences) between each pair of y_{refi} and y_i:

$$t = \frac{|\bar{\varepsilon}| \cdot \sqrt{N}}{\sigma_\varepsilon}$$

Eq. 1065.602-7

Example:

$\bar{\varepsilon} = -0.12580$

$N = 16$

$\sigma_\varepsilon = 0.04837$

$$t = \frac{|-0.12580| \cdot \sqrt{16}}{0.04837}$$

$t = 10.403$

$v = N - 1$

Example:

$N = 16$

$v = 16 - 1$

$v = 15$

(3) Use Table 1 of this section to compare t to the t_{crit} values tabulated versus the number of degrees of freedom. If t is less than t_{crit}, then t passes the t-test. The Microsoft Excel software has a TINV function that returns results equivalent results and may be used in place of Table 1, which follows:

TABLE 1 OF § 1065.602—CRITICAL t VALUES VERSUS NUMBER OF DEGREES OF FREEDOM, v[1]

v	Confidence	
	90%	95%
1	6.314	12.706
2	2.920	4.303
3	2.353	3.182
4	2.132	2.776
5	2.015	2.571
6	1.943	2.447
7	1.895	2.365
8	1.860	2.306
9	1.833	2.262
10	1.812	2.228
11	1.796	2.201
12	1.782	2.179
13	1.771	2.160
14	1.761	2.145
15	1.753	2.131
16	1.746	2.120
18	1.734	2.101
20	1.725	2.086

TABLE 1 OF § 1065.602—CRITICAL t VALUES VERSUS NUMBER OF DEGREES OF FREEDOM, v[1]—Continued

v	Confidence	
	90%	95%
22	1.717	2.074
24	1.711	2.064
26	1.706	2.056
28	1.701	2.048
30	1.697	2.042
35	1.690	2.030
40	1.684	2.021
50	1.676	2.009
70	1.667	1.994
100	1.660	1.984
1000 +	1.645	1.960

[1] Use linear interpolation to establish values not shown here.

(g) *F-test*. Calculate the F statistic as follows:

$$F_y = \frac{\sigma_y^2}{\sigma_{ref}^2} \qquad \text{Eq. 1065.602-8}$$

Example:

$$\sigma_y = \sqrt{\frac{\sum_{i=1}^{N}\left(y_i - \bar{y}\right)^2}{\left(N-1\right)}} = 10.583$$

$$\sigma_{ref} = \sqrt{\frac{\sum_{i=1}^{N_{ref}}\left(y_{refi} - \bar{y}_{ref}\right)^2}{\left(N_{ref}-1\right)}} = 9.399$$

$$F = \frac{10.583^2}{9.399^2}$$

$F = 1.268$

(1) For a 90% confidence F-test, use Table 2 of this section to compare F to the F_{crit90} values tabulated versus $(N-1)$ and $(N_{ref}-1)$. If F is less than F_{crit90}, then F passes the F-test at 90% confidence.

(2) For a 95% confidence F-test, use Table 3 of this section to compare F to the F_{crit95} values tabulated versus $(N-1)$ and $(N_{ref}-1)$. If F is less than F_{crit95}, then F passes the F-test at 95% confidence.

Table 2 of §1065.602–Critical F values, F_{crit90}, versus N-1 and N_{ref}-1 at 90 % confidence

N-1	1	2	3	4	5	6	7	8	9	10	12	15	20	24	30	40	60	120	1000+
N_{ref}-1																			
1	39.86	49.50	53.59	55.83	57.24	58.20	58.90	59.43	59.85	60.19	60.70	61.22	61.74	62.00	62.26	62.52	62.79	63.06	63.32
2	8.526	9.000	9.162	9.243	9.293	9.326	9.349	9.367	9.381	9.392	9.408	9.425	9.441	9.450	9.458	9.466	9.475	9.483	9.491
3	5.538	5.462	5.391	5.343	5.309	5.285	5.266	5.252	5.240	5.230	5.216	5.200	5.184	5.176	5.168	5.160	5.151	5.143	5.134
4	4.545	4.325	4.191	4.107	4.051	4.010	3.979	3.955	3.936	3.920	3.896	3.870	3.844	3.831	3.817	3.804	3.790	3.775	3.761
5	4.060	3.780	3.619	3.520	3.453	3.405	3.368	3.339	3.316	3.297	3.268	3.238	3.207	3.191	3.174	3.157	3.140	3.123	3.105
6	3.776	3.463	3.289	3.181	3.108	3.055	3.014	2.983	2.958	2.937	2.905	2.871	2.836	2.818	2.800	2.781	2.762	2.742	2.722
7	3.589	3.257	3.074	2.961	2.883	2.827	2.785	2.752	2.725	2.703	2.668	2.632	2.595	2.575	2.555	2.535	2.514	2.493	2.471
8	3.458	3.113	2.924	2.806	2.726	2.668	2.624	2.589	2.561	2.538	2.502	2.464	2.425	2.404	2.383	2.361	2.339	2.316	2.293
9	3.360	3.006	2.813	2.693	2.611	2.551	2.505	2.469	2.440	2.416	2.379	2.340	2.298	2.277	2.255	2.232	2.208	2.184	2.159
10	3.285	2.924	2.728	2.605	2.522	2.461	2.414	2.377	2.347	2.323	2.284	2.244	2.201	2.178	2.155	2.132	2.107	2.082	2.055
11	3.225	2.860	2.660	2.536	2.451	2.389	2.342	2.304	2.274	2.248	2.209	2.167	2.123	2.100	2.076	2.052	2.026	2.000	1.972
12	3.177	2.807	2.606	2.480	2.394	2.331	2.283	2.245	2.214	2.188	2.147	2.105	2.060	2.036	2.011	1.986	1.960	1.932	1.904
13	3.136	2.763	2.560	2.434	2.347	2.283	2.234	2.195	2.164	2.138	2.097	2.053	2.007	1.983	1.958	1.931	1.904	1.876	1.846
14	3.102	2.726	2.522	2.395	2.307	2.243	2.193	2.154	2.122	2.095	2.054	2.010	1.962	1.938	1.912	1.885	1.857	1.828	1.797
15	3.073	2.695	2.490	2.361	2.273	2.208	2.158	2.119	2.086	2.059	2.017	1.972	1.924	1.899	1.873	1.845	1.817	1.787	1.755
16	3.048	2.668	2.462	2.333	2.244	2.178	2.128	2.088	2.055	2.028	1.985	1.940	1.891	1.866	1.839	1.811	1.782	1.751	1.718
17	3.026	2.645	2.437	2.308	2.218	2.152	2.102	2.061	2.028	2.001	1.958	1.912	1.862	1.836	1.809	1.781	1.751	1.719	1.686
18	3.007	2.624	2.416	2.286	2.196	2.130	2.079	2.038	2.005	1.977	1.933	1.887	1.837	1.810	1.783	1.754	1.723	1.691	1.657
19	2.990	2.606	2.397	2.266	2.176	2.109	2.058	2.017	1.984	1.956	1.912	1.865	1.814	1.787	1.759	1.730	1.699	1.666	1.631
20	2.975	2.589	2.380	2.249	2.158	2.091	2.040	1.999	1.965	1.937	1.892	1.845	1.794	1.767	1.738	1.708	1.677	1.643	1.607
21	2.961	2.575	2.365	2.233	2.142	2.075	2.023	1.982	1.948	1.920	1.875	1.827	1.776	1.748	1.719	1.689	1.657	1.623	1.586
20	2.949	2.561	2.351	2.219	2.128	2.061	2.008	1.967	1.933	1.904	1.859	1.811	1.759	1.731	1.702	1.671	1.639	1.604	1.567
23	2.937	2.549	2.339	2.207	2.115	2.047	1.995	1.953	1.919	1.890	1.845	1.796	1.744	1.716	1.686	1.655	1.622	1.587	1.549
24	2.927	2.538	2.327	2.195	2.103	2.035	1.983	1.941	1.906	1.877	1.832	1.783	1.730	1.702	1.672	1.641	1.607	1.571	1.533
25	2.918	2.528	2.317	2.184	2.092	2.024	1.971	1.929	1.895	1.866	1.820	1.771	1.718	1.689	1.659	1.627	1.593	1.557	1.518
26	2.909	2.519	2.307	2.174	2.082	2.014	1.961	1.919	1.884	1.855	1.809	1.760	1.706	1.677	1.647	1.615	1.581	1.544	1.504
27	2.901	2.511	2.299	2.165	2.073	2.005	1.952	1.909	1.874	1.845	1.799	1.749	1.695	1.666	1.636	1.603	1.569	1.531	1.491
28	2.894	2.503	2.291	2.157	2.064	1.996	1.943	1.900	1.865	1.836	1.790	1.740	1.685	1.656	1.625	1.593	1.558	1.520	1.478
29	2.887	2.495	2.283	2.149	2.057	1.988	1.935	1.892	1.857	1.827	1.781	1.731	1.676	1.647	1.616	1.583	1.547	1.509	1.467
30	2.881	2.489	2.276	2.142	2.049	1.980	1.927	1.884	1.849	1.819	1.773	1.722	1.667	1.638	1.606	1.573	1.538	1.499	1.456
40	2.835	2.440	2.226	2.091	1.997	1.927	1.873	1.829	1.793	1.763	1.715	1.662	1.605	1.574	1.541	1.506	1.467	1.425	1.377
60	2.791	2.393	2.177	2.041	1.946	1.875	1.819	1.775	1.738	1.707	1.657	1.603	1.543	1.511	1.476	1.437	1.395	1.348	1.291
120	2.748	2.347	2.130	1.992	1.896	1.824	1.767	1.722	1.684	1.652	1.601	1.545	1.482	1.447	1.409	1.368	1.320	1.265	1.193
1000+	2.706	2.303	2.084	1.945	1.847	1.774	1.717	1.670	1.632	1.599	1.546	1.487	1.421	1.383	1.342	1.295	1.240	1.169	1.000

Table 3 of §1065.602–Critical F values, F_{crit95}, versus N-1 and N_{ref}-1 at 95 % confidence

N-1	1	2	3	4	5	6	7	8	9	10	12	15	20	24	30	40	60	120	1000+
N_{ref}-1																			
1	161.4	199.5	215.7	224.5	230.1	233.9	236.7	238.8	240.5	241.8	243.9	245.9	248.0	249.0	250.1	251.1	252.2	253.2	254.3
2	18.51	19.00	19.16	19.24	19.29	19.33	19.35	19.37	19.38	19.39	19.41	19.42	19.44	19.45	19.46	19.47	19.47	19.48	19.49
3	10.12	9.552	9.277	9.117	9.014	8.941	8.887	8.845	8.812	8.786	8.745	8.703	8.660	8.639	8.617	8.594	8.572	8.549	8.526
4	7.709	6.944	6.591	6.388	6.256	6.163	6.094	6.041	5.999	5.964	5.912	5.858	5.803	5.774	5.746	5.717	5.688	5.658	5.628
5	6.608	5.786	5.410	5.192	5.050	4.950	4.876	4.818	4.773	4.735	4.678	4.619	4.558	4.527	4.496	4.464	4.431	4.399	4.365
6	5.987	5.143	4.757	4.534	4.387	4.284	4.207	4.147	4.099	4.060	4.000	3.938	3.874	3.842	3.808	3.774	3.740	3.705	3.669
7	5.591	4.737	4.347	4.120	3.972	3.866	3.787	3.726	3.677	3.637	3.575	3.511	3.445	3.411	3.376	3.340	3.304	3.267	3.230
8	5.318	4.459	4.066	3.838	3.688	3.581	3.501	3.438	3.388	3.347	3.284	3.218	3.150	3.115	3.079	3.043	3.005	2.967	2.928
9	5.117	4.257	3.863	3.633	3.482	3.374	3.293	3.230	3.179	3.137	3.073	3.006	2.937	2.901	2.864	2.826	2.787	2.748	2.707
10	4.965	4.103	3.708	3.478	3.326	3.217	3.136	3.072	3.020	2.978	2.913	2.845	2.774	2.737	2.700	2.661	2.621	2.580	2.538
11	4.844	3.982	3.587	3.357	3.204	3.095	3.012	2.948	2.896	2.854	2.788	2.719	2.646	2.609	2.571	2.531	2.490	2.448	2.405
12	4.747	3.885	3.490	3.259	3.106	2.996	2.913	2.849	2.796	2.753	2.687	2.617	2.544	2.506	2.466	2.426	2.384	2.341	2.296
13	4.667	3.806	3.411	3.179	3.025	2.915	2.832	2.767	2.714	2.671	2.604	2.533	2.459	2.420	2.380	2.339	2.297	2.252	2.206
14	4.600	3.739	3.344	3.112	2.958	2.848	2.764	2.699	2.646	2.602	2.534	2.463	2.388	2.349	2.308	2.266	2.223	2.178	2.131
15	4.543	3.682	3.287	3.056	2.901	2.791	2.707	2.641	2.588	2.544	2.475	2.403	2.328	2.288	2.247	2.204	2.160	2.114	2.066
16	4.494	3.634	3.239	3.007	2.852	2.741	2.657	2.591	2.538	2.494	2.425	2.352	2.276	2.235	2.194	2.151	2.106	2.059	2.010
17	4.451	3.592	3.197	2.965	2.810	2.699	2.614	2.548	2.494	2.450	2.381	2.308	2.230	2.190	2.148	2.104	2.058	2.011	1.960
18	4.414	3.555	3.160	2.928	2.773	2.661	2.577	2.510	2.456	2.412	2.342	2.269	2.191	2.150	2.107	2.063	2.017	1.968	1.917
19	4.381	3.522	3.127	2.895	2.740	2.628	2.544	2.477	2.423	2.378	2.308	2.234	2.156	2.114	2.071	2.026	1.980	1.930	1.878
20	4.351	3.493	3.098	2.866	2.711	2.599	2.514	2.447	2.393	2.348	2.278	2.203	2.124	2.083	2.039	1.994	1.946	1.896	1.843
21	4.325	3.467	3.073	2.840	2.685	2.573	2.488	2.421	2.366	2.321	2.250	2.176	2.096	2.054	2.010	1.965	1.917	1.866	1.812
22	4.301	3.443	3.049	2.817	2.661	2.549	2.464	2.397	2.342	2.297	2.226	2.151	2.071	2.028	1.984	1.938	1.889	1.838	1.783
23	4.279	3.422	3.028	2.796	2.640	2.528	2.442	2.375	2.320	2.275	2.204	2.128	2.048	2.005	1.961	1.914	1.865	1.813	1.757
24	4.260	3.403	3.009	2.776	2.621	2.508	2.423	2.355	2.300	2.255	2.183	2.108	2.027	1.984	1.939	1.892	1.842	1.790	1.733
25	4.242	3.385	2.991	2.759	2.603	2.490	2.405	2.337	2.282	2.237	2.165	2.089	2.008	1.964	1.919	1.872	1.822	1.768	1.711
26	4.225	3.369	2.975	2.743	2.587	2.474	2.388	2.321	2.266	2.220	2.148	2.072	1.990	1.946	1.901	1.853	1.803	1.749	1.691
27	4.210	3.354	2.960	2.728	2.572	2.459	2.373	2.305	2.250	2.204	2.132	2.056	1.974	1.930	1.884	1.836	1.785	1.731	1.672
28	4.196	3.340	2.947	2.714	2.558	2.445	2.359	2.291	2.236	2.190	2.118	2.041	1.959	1.915	1.869	1.820	1.769	1.714	1.654
29	4.183	3.328	2.934	2.701	2.545	2.432	2.346	2.278	2.223	2.177	2.105	2.028	1.945	1.901	1.854	1.806	1.754	1.698	1.638
30	4.171	3.316	2.922	2.690	2.534	2.421	2.334	2.266	2.211	2.165	2.092	2.015	1.932	1.887	1.841	1.792	1.740	1.684	1.622
40	4.085	3.232	2.839	2.606	2.450	2.336	2.249	2.180	2.124	2.077	2.004	1.925	1.839	1.793	1.744	1.693	1.637	1.577	1.509
60	4.001	3.150	2.758	2.525	2.368	2.254	2.167	2.097	2.040	1.993	1.917	1.836	1.748	1.700	1.649	1.594	1.534	1.467	1.389
120	3.920	3.072	2.680	2.447	2.290	2.175	2.087	2.016	1.959	1.911	1.834	1.751	1.659	1.608	1.554	1.495	1.429	1.352	1.254
1000+	3.842	2.996	2.605	2.372	2.214	2.099	2.010	1.938	1.880	1.831	1.752	1.666	1.571	1.517	1.459	1.394	1.318	1.221	1.000

(h) *Slope*. Calculate a least-squares regression slope, a_{1y}, as follows:

$$a_{1y} = \frac{\sum_{i=1}^{N}(y_i - \bar{y}) \cdot \left(y_{refi} - \bar{y}_{ref}\right)}{\sum_{i=1}^{N}(y_{refi} - \bar{y}_{ref})^2}$$

Eq. 1065.602-9

Example:
$N = 6000$
$y_1 = 2045.8$
$\bar{y} = 1050.1$
$y_{ref\ 1} = 2045.0$
$\bar{y}_{ref} = 1055.3$

$$a_{1y} = \frac{\left(2045.8 - 1050.1\right) \cdot \left(2045.0 - 1055.3\right) + \ldots + \left(y_{6000} - 1050.1\right) \cdot \left(y_{ref6000} - 1055.3\right)}{\left(2045.0 - 1055.3\right)^2 + \ldots + \left(y_{ref6000} - 1055.3\right)^2}$$

$a_{1y} = 1.0110$

(i) *Intercept*. Calculate a least-squares regression intercept, a_{0y}, as follows:

$$a_{0y} = \bar{y} - \left(a_{1y} \cdot \bar{y}_{ref}\right) \qquad \text{Eq. 1065.602-10}$$

Example:
$\bar{y} = 1050.1$
$a_{1y} = 1.0110$
$\bar{y}_{ref} = 1055.3$
$a_{0y} = 1050.1 - (1.0110 \cdot 1055.3)$
$a_{0y} = -16.8083$

(j) *Standard estimate of error*. Calculate a standard estimate of error, *SEE*, as follows:

$$SEE_y = \sqrt{\frac{\sum_{i=1}^{N}\left[y_i - a_{0y} - (a_{1y} \cdot y_{refi})\right]^2}{N-2}}$$

Eq. 1065.602-11

Eq. 1065.602–11
Example:
$N = 6000$
$y_1 = 2045.8$
$a_{0y} = -16.8083$
$a_{1y} = 1.0110$
$y_{ref1} = 2045.0$

$$SEE_y = \sqrt{\frac{\left[2045.8 - (-16.8083) - (1.0110 \cdot 2045.0)\right]^2 + \ldots \left[y_{6000} - (-16.8083) - (1.0110 \cdot y_{ref\,6000})\right]^2}{6000 - 2}}$$

$SEE_y = 5.348$

(k) *Coefficient of determination.* Calculate a coefficient of determination, r^2, as follows:

$$r_y^2 = 1 - \frac{\sum_{i=1}^{N}\left[y_i - a_{0y} - \left(a_{1y} \cdot y_{refi}\right)\right]^2}{\sum_{i=1}^{N}\left[y_i - \bar{y}\right]^2} \qquad \text{Eq. 1065.602-12}$$

Example:
$N = 6000$
$y_1 = 2045.8$
$a_{0y} = -16.8083$
$a_{1y} = 1.0110$
$y_{refi} = 2045.0$
$\bar{y} = 1480.5$

$$r_y^2 = 1 - \frac{\left[2045.8 - (-16.8083) - (1.0110 \times 2045.0)\right]^2 + \ldots\left[y_{6000} - (-16.8083) - \left(1.0110 \cdot y_{ref6000}\right)\right]^2}{\left[2045.8 - 1480.5\right]^2 + \ldots\left[y_{6000} - 1480.5\right]^2}$$

$$r_y^2 = 0.9859$$

(l) *Flow-weighted mean concentration.* In some sections of this part, you may need to calculate a flow-weighted mean concentration to determine the applicability of certain provisions. A flow-weighted mean is the mean of a quantity after it is weighted proportional to a corresponding flow rate. For example, if a gas concentration is measured continuously from the raw exhaust of an engine, its flow-weighted mean concentration is the sum of the products of each recorded concentration times its respective exhaust molar flow rate, divided by the sum of the recorded flow rate values. As another example, the bag concentration from a CVS system is the same as the flow-weighted mean concentration because the CVS system itself flow-weights the bag concentration. You might already expect a certain flow-weighted mean concentration of an emission at its standard based on previous testing with similar engines or testing with similar equipment and instruments. If you need to estimate your expected flow-weighted mean concentration of an emission at its standard, we recommend using the following examples as a guide for how to estimate the flow-weighted mean concentration expected at the standard. Note that these examples are not exact and that they contain assumptions that are not always valid. Use good engineering judgment to determine if you can use similar assumptions.

(1) To estimate the flow-weighted mean raw exhaust NO_X concentration from a turbocharged heavy-duty compression-ignition engine at a NO_X standard of 2.5 g/(kW · hr), you may do the following:

(i) Based on your engine design, approximate a map of maximum torque versus speed and use it with the applicable normalized duty cycle in the standard-setting part to generate a reference duty cycle as described in §1065.610. Calculate the total reference work, W_{ref}, as described in §1065.650. Divide the reference work by the duty cycle's time interval, $\Delta t_{dutycycle}$, to determine mean reference power, P_{ref}.

(ii) Based on your engine design, estimate maximum power, P_{max}, the design speed at maximum power, f_{nmax}, the design maximum intake manifold boost pressure, p_{inmax}, and temperature, T_{inmax}. Also, estimate a mean fraction of power that is lost due to friction and pumping, $\bar{p}_{frict}$. Use this information along with the engine displacement volume, V_{disp}, an approximate volumetric efficiency, η_V, and the number

of engine strokes per power stroke (two-stroke or four-stroke), N_{stroke}, to estimate the maximum raw exhaust molar flow rate, $\dot{n}_{exhmax}$.

(iii) Use your estimated values as described in the following example calculation:

$$\overline{x}_{exp} = \frac{e_{std} \cdot W_{ref}}{M \cdot \dot{n}_{exhmax} \cdot \Delta t_{duty\ cycle} \cdot \left(\frac{\overline{P}_{ref} + \left(\overline{P}_{frict} \cdot P_{max} \right)}{P_{max}} \right)}$$

Eq. 1065.602-13

$$\dot{n}_{exhmax} = \frac{p_{max} \cdot V_{disp} \cdot f_{nmax} \cdot \frac{2}{N_{stroke}} \cdot \eta_V}{R \cdot T_{max}}$$

Eq. 1065.602-14

Example:
e_{NOx} = 2.5 g/(kW · hr)
W_{ref} = 11.883 kW · hr
M_{NOx} = 46.0055 g/mol = 46.0055 · 10^{-6} g/μmol
$\Delta t_{dutycycle}$ = 20 min = 1200 s
$\overline{P}_{ref}$ = 35.65 kW
$\overline{P}_{frict}$ = 15%
P_{max} = 125 kW
p_{max} = 300 kPa = 300,000 Pa
V_{disp} = 3.0 l = 0.0030 m^3/r
f_{nmax} = 2,800 r/min = 46.67 r/s
N_{stroke} = 4
η_V = 0.9
R = 8.314472 J/(mol · K)
T_{max} = 348.15 K

$$\dot{n}_{exhmax} = \frac{300000 \cdot 0.0030 \cdot 46.67 \cdot \frac{2}{4} \cdot 0.9}{8.314472 \cdot 348.15}$$

$\dot{n}_{exhmax}$ = 6.53 mol/s

$$\overline{x}_{exp} = \frac{2.5 \cdot 11.883}{46.0055 \cdot 10^{-6} \cdot 6.53 \cdot 1200 \cdot \left(\frac{35.65 + \left(0.15 \cdot 125 \right)}{125} \right)}$$

$\overline{x}_{exp}$ = 189.4 μmol/mol

(2) To estimate the flow-weighted mean NMHC concentration in a CVS from a naturally aspirated nonroad spark-ignition engine at an NMHC standard of 0.5 g/(kW · hr), you may do the following:

(i) Based on your engine design, approximate a map of maximum torque

versus speed and use it with the applicable normalized duty cycle in the standard-setting part to generate a reference duty cycle as described in § 1065.610. Calculate the total reference work, W_{ref}, as described in § 1065.650.

(ii) Multiply your CVS total molar flow rate by the time interval of the duty cycle, $\Delta t_{dutycycle}$. The result is the total diluted exhaust flow of the n_{dexh}.

(iii) Use your estimated values as described in the following example calculation:

$$\bar{x}_{NMHC} = \frac{e_{std} \cdot W_{ref}}{M \cdot \dot{n}_{dexh} \cdot \Delta t_{duty\ cycle}} \qquad \text{Eq. 1065.602-15}$$

Example:

e_{NMHC} = 1.5 g/(kW · hr)

W_{ref} = 5.389 kW · hr

M_{NMHC} = 13.875389 g/mol = 13.875389 · 10^{-6} g/μmol

$\dot{n}_{dexh}$ = 6.021 mol/s

$\Delta t_{dutycycle}$ = 30 min = 1800 s

$$\bar{x}_{NMHC} = \frac{1.5 \cdot 5.389}{13.875389 \cdot 10^{-6} \cdot 6.021 \cdot 1800}$$

$\bar{x}_{NMHC}$ = 53.8 μmol/mol

[70 FR 40516, July 13, 2005, as amended at 73 FR 37324, June 30, 2008; 75 FR 23044, Apr. 30, 2010; 76 FR 57452, Sept. 15, 2011; 79 FR 23779, Apr. 28, 2014; 81 FR 74170, Oct. 25, 2016]

EFFECTIVE DATE NOTE: At 86 FR 34548, June 29, 2021, § 1065.602 was amended, effective July 29, 2021.

§ 1065.610 Duty cycle generation.

This section describes how to generate duty cycles that are specific to your engine, based on the normalized duty cycles in the standard-setting part. During an emission test, use a duty cycle that is specific to your engine to command engine speed, torque, and power, as applicable, using an engine dynamometer and an engine operator demand. Paragraph (a) of this section describes how to ''normalize'' your engine's map to determine the maximum test speed and torque for your engine. The rest of this section describes how to use these values to ''denormalize'' the duty cycles in the standard-setting parts, which are all published on a normalized basis. Thus, the term ''normalized'' in paragraph (a) of this section refers to different values than it does in the rest of the section.

(a) *Maximum test speed*, f_{ntest}. This section generally applies to duty cycles for variable-speed engines. For constant-speed engines subject to duty cycles that specify normalized speed commands, use the no-load governed speed as the measured f_{ntest}. This is the highest engine speed where an engine outputs zero torque. For variable-speed engines, determine f_{ntest} as follows:

(1) Develop a measured value for f_{ntest} as follows:

(i) Determine maximum power, P_{max}, from the engine map generated according to § 1065.510 and calculate the value for power equal to 98% of P_{max}.

(ii) Determine the lowest and highest engine speeds corresponding to 98% of $P_{max,}$ using linear interpolation, and no extrapolation, as appropriate.

(iii) Determine the engine speed corresponding to maximum power, $f_{nPmax,}$ by calculating the average of the two speed values from paragraph (a)(1)(ii) of this section. If there is only one speed where power is equal to 98% of $P_{max,}$ take f_{nPmax} as the speed at which P_{max} occurs.

(iv) Transform the map into a normalized power-versus-speed map by dividing power terms by P_{max} and dividing speed terms by f_{nPmax}. Use the following equation to calculate a quantity representing the sum of squares from the normalized map:

$$\text{Sum of squares} = f_{\text{nnormi}}^2 + P_{\text{normi}}^2$$

Eq. 1065.610-1

Where:

i = an indexing variable that represents one recorded value of an engine map.

f_{nnormi} = an engine speed normalized by dividing it by f_{nPmax}.

P_{normi} = an engine power normalized by dividing it by P_{max}.

(v) Determine the maximum value for the sum of the squares from the map and multiply that value by 0.98.

(vi) Determine the lowest and highest engine speeds corresponding to the value calculated in paragraph (a)(1)(v) of this section, using linear interpolation as appropriate. Calculate f_{ntest} as the average of these two speed values.

(viii) The following example illustrates a calculation of f_{ntest}:

(f_{n1} = 2360, P_1 = 223.1, f_{nnorm1} = 1.002, P_{norm1} = 0.967)

(f_{n2} = 2364, P_2 = 227.7, f_{nnorm2} = 1.004, P_{norm2} = 0.986)

(f_{n3} = 2369, P_3 = 230.0, f_{nnorm3} = 1.006, P_{norm3} = 0.994)

(f_{n4} = 2374, P_4 = 220.8, f_{nnorm4} = 1.008, P_{norm4} = 0.951)

$$f_{ntest} = \frac{\left(\left(2360 + (2364 - 2360) \cdot \frac{0.98 \cdot 230.0 - 223.1}{227.7 - 223.1}\right) + \left(2369 + (2374 - 2369) \cdot \frac{0.98 \cdot 230.0 - 230.0}{220.8 - 230.0}\right)\right)}{2}$$

$$= \frac{2363 + 2371}{2} = 2367 \text{ r/min}$$

Sum of squares = ($1.002^2 + 0.967^2$) = 1.94

Sum of squares = ($1.004^2 + 0.986^2$) = 1.98

Sum of squares = ($1.006^2 + 0.994^2$) = 2.00

Sum of squares = ($1.008^2 + 0.951^2$) = 1.92

$$f_{npmax} = \frac{\left(\left(2360 + (2364 - 2360) \cdot \frac{0.98 \cdot 2.0 - 1.94}{1.98 - 1.94}\right) + \left(2369 + (2374 - 2369) \cdot \frac{0.98 \cdot 2.0 - 2.0}{1.92 - 2.0}\right)\right)}{2}$$

$$= \frac{2363 + 2371}{2} = 2367 \text{ r/min}$$

(vi) Determine the lowest and highest engine speeds corresponding to the value calculated in paragraph (a)(1)(v) of this section, using linear interpolation as appropriate. Calculate f_{ntest} as the average of these two speed values. If there is only one speed corresponding to the value calculated in paragraph (a)(1)(v) of this section, take f_{ntest} as the speed where the maximum of the sum of the squares occurs.

(vii) The following example illustrates a calculation of f_{ntest}:

P_{max} = 230.0

(f_{n1} = 2360, P_1 = 222.5, f_{nnorm1} = 1.002, P_{norm1} = 0.9675)

(f_{n2} = 2364, P_2 = 226.8, f_{nnorm2} = 1.004, P_{norm2} = 0.9859)

(f_{n3} = 2369, P_3 = 228.6, f_{nnorm3} = 1.006, P_{norm3} = 0.9940)

(f_{n4} = 2374, P_4 = 218.7, f_{nnorm4} = 1.008, P_{norm4} = 0.9508)

Sum of squares = ($1.002^2 + 0.9675^2$) = 1.94

Sum of squares = $(1.004^2 + 0.9859^2) = 1.98$
Sum of squares = $(1.006^2 + 0.9940^2) = 2.00$

Sum of squares = $(1.008^2 + 0.9508^2) = 1.92$

$$f_{\text{ntest}} = \frac{\left(\left(2360 + (2364 - 2360) \cdot \frac{0.98 \cdot 2.0 - 1.94}{1.98 - 1.94}\right) + \left(2369 + (2374 - 2369) \cdot \frac{0.98 \cdot 2.0 - 2.0}{1.92 - 2.0}\right)\right)}{2}$$

$$= \frac{2362.0 + 2371.5}{2} = 2366.8 \text{ r/min}$$

$$f_{\text{npmax}} = \frac{\left(\left(2360 + (2364 - 2360) \cdot \frac{0.98 \cdot 230.0 - 222.5}{226.8 - 222.5}\right) + \left(2369 + (2374 - 2369) \cdot \frac{0.98 \cdot 230.0 - 228.6}{218.7 - 228.6}\right)\right)}{2}$$

$$= \frac{2362.7 + 2370.6}{2} = 2366.7 \text{ r/min}$$

(2) For engines with a high-speed governor that will be subject to a reference duty cycle that specifies normalized speeds greater than 100%, calculate an alternate maximum test speed, $f_{\text{ntest,alt}}$, as specified in this paragraph (a)(2). If $f_{\text{ntest,alt}}$ is less than the measured maximum test speed, f_{ntest}, determined in paragraph (a)(1) of this section, replace f_{ntest} with $f_{\text{ntest,alt}}$. In this case, $f_{\text{ntest,alt}}$ becomes the ''maximum test speed'' for that engine. Note that §1065.510 allows you to apply an optional declared maximum test speed to the final measured maximum test speed determined as an outcome of the comparison between f_{ntest}, and $f_{\text{ntest,alt}}$ in this paragraph (a)(2). Determine $f_{\text{ntest,alt}}$ as follows:

$$f_{\text{ntest,alt}} = \frac{f_{\text{nhi,idle}} - f_{\text{nidle}}}{\%speed_{\text{max}}} + f_{\text{nidle}}$$

Eq. 1065.610-2

Where:

$f_{\text{ntest,alt}}$ = alternate maximum test speed
$f_{\text{nhi,idle}}$ = warm high-idle speed
f_{nidle} = warm idle speed
$\%\ speed_{\text{max}}$ = maximum normalized speed from duty cycle

Example:

$f_{\text{nhi,idle}}$ = 2200 r/min
f_{nidle} = 800 r/min

$$f_{\text{ntest,alt}} = \frac{2200 - 800}{1.05} + 800$$

$f_{\text{ntest,alt}}$ = 2133 r/min

(3) For variable-speed engines, transform normalized speeds to reference speeds according to paragraph (c) of this section by using the measured maximum test speed determined according to paragraphs (a)(1) and (2) of

this section—or use your declared maximum test speed, as allowed in § 1065.510.

(4) For constant-speed engines, transform normalized speeds to reference speeds according to paragraph (c) of this section by using the measured no-load governed speed—or use your declared maximum test speed, as allowed in § 1065.510.

(b) *Maximum test torque, T_{test}.* For constant-speed engines, determine the measured T_{test} from the torque and power-versus-speed maps, generated according to § 1065.510, as follows:

(1) For constant speed engines mapped using the methods in § 1065.510(d)(5)(i) or (ii), determine T_{test} as follows:

(i) Determine maximum power, P_{max}, from the engine map generated according to § 1065.510 and calculate the value for power equal to 98% of P_{max}.

(ii) Determine the lowest and highest engine speeds corresponding to 98% of P_{max}, using linear interpolation, and no extrapolation, as appropriate.

(iii) Determine the engine speed corresponding to maximum power, f_{nPmax}, by calculating the average of the two speed values from paragraph (a)(1)(ii) of this section. If there is only one speed where power is equal to 98% of P_{max}, take f_{nPmax} as the speed at which P_{max} occurs.

(iv) Transform the map into a normalized power-versus-speed map by dividing power terms by P_{max} and dividing speed terms by f_{nPmax}. Use Eq. 1065.610–1 to calculate a quantity representing the sum of squares from the normalized map.

(v) Determine the maximum value for the sum of the squares from the map and multiply that value by 0.98.

(vi) Determine the lowest and highest engine speeds corresponding to the value calculated in paragraph (a)(1)(v) of this section, using linear interpolation as appropriate. Calculate f_{ntest} as the average of these two speed values. If there is only one speed corresponding to the value calculated in paragraph (a)(1)(v) of this section, take f_{ntest} as the speed where the maximum of the sum of the squares occurs.

(vii) The measured T_{test} is the mapped torque at f_{ntest}.

(2) For constant-speed engines using the two-point mapping method in § 1065.510(d)(5)(iii), you may follow paragraph (a)(1) of this section to determine the measured T_{test}, or you may use the measured torque of the second point as the measured T_{test} directly.

(3) Transform normalized torques to reference torques according to paragraph (d) of this section by using the measured maximum test torque determined according to paragraph (b)(1) of this section—or use your declared maximum test torque, as allowed in § 1065.510.

(c) *Generating reference speed values from normalized duty cycle speeds.* Transform normalized speed values to reference values as follows:

(1) *% speed.* If your normalized duty cycle specifies % speed values, use your warm idle speed and your maximum test speed to transform the duty cycle, as follows:

$$f_{nref} = \%\ speed \cdot (f_{ntest} - f_{nidle}) + f_{nidle}$$

Eq. 1065.610-3

Example:
% speed = 85% = 0.85
f_{ntest} = 2364 r/min
f_{nidle} = 650 r/min
f_{nref} = 0.85 • (2364 − 650) + 650
f_{nref} = 2107 r/min

(2) *A, B, and C speeds.* If your normalized duty cycle specifies speeds as A, B, or C values, use your power-versus-speed curve to determine the lowest speed below maximum power at which 50% of maximum power occurs. Denote this value as n_{lo}. Take n_{lo} to be warm idle speed if all power points at speeds below the maximum power speed are higher than 50% of maximum power.

Also determine the highest speed above maximum power at which 70% of maximum power occurs. Denote this value as n_{hi}. If all power points at speeds above the maximum power speed are higher than 70% of maximum power, take n_{hi} to be the declared maximum safe engine speed or the declared maximum representative engine speed, whichever is lower. Use n_{hi} and n_{lo} to calculate reference values for A, B, or C speeds as follows:

$$f_{nrefA} = 0.25 \cdot (n_{hi} - n_{lo}) + n_{lo}$$

Eq. 1065.610-4

$$f_{nrefB} = 0.50 \cdot (n_{hi} - n_{lo}) + n_{lo}$$

Eq. 1065.610-5

$$f_{nrefC} = 0.75 \cdot (n_{hi} - n_{lo}) + n_{lo}$$

Eq. 1065.610-6

Example:
n_{lo} = 1005 r/min
n_{hi} = 2385 r/min
f_{nrefA} = 0.25 • (2385 − 1005) + 1005
f_{nrefB} = 0.50 • (2385 − 1005) + 1005
f_{nrefC} = 0.75 • (2385 − 1005) + 1005
f_{nrefA} = 1350 r/min
f_{nrefB} = 1695 r/min
f_{nrefC} = 2040 r/min

(3) *Intermediate speed*. Based on the map, determine maximum torque, T_{max}, and the corresponding speed, f_{nTmax}, calculated as the average of the lowest and highest speeds at which torque is equal to 98% of T_{max}. Use linear interpolation between points to determine the speeds where torque is equal to 98% of T_{max}. Identify your reference intermediate speed as one of the following values:

(i) f_{nTmax} if it is between (60 and 75) % of maximum test speed.

(ii) 60% of maximum test speed if f_{nTmax} is less than 60% of maximum test speed.

(iii) 75% of maximum test speed if f_{nTmax} is greater than 75% of maximum test speed.

(d) *Generating reference torques from normalized duty-cycle torques*. Transform normalized torques to reference torques using your map of maximum torque versus speed.

(1) *Reference torque for variable-speed engines*. For a given speed point, multiply the corresponding % torque by the maximum torque at that speed, according to your map. If your engine is subject to a reference duty cycle that specifies negative torque values (*i.e.*, engine motoring), use negative torque for those motoring points (*i.e.*, the motoring torque). If you map negative torque as allowed under § 1065.510 (c)(2) and the low-speed governor activates, resulting in positive torques, you may replace those positive motoring mapped torques with negative values between zero and the largest negative motoring torque. For both maximum and motoring torque maps, linearly interpolate mapped torque values to determine torque between mapped speeds. If the reference speed is below the minimum mapped speed (*i.e.*, 95% of idle speed or 95% of lowest required speed, whichever is higher), use the mapped torque at the minimum mapped speed as the reference torque. The result is the reference torque for each speed point.

(2) *Reference torque for constant-speed engines*. Multiply a % torque value by your maximum test torque. The result is the reference torque for each point.

(3) *Required deviations*. We require the following deviations for variable-speed engines intended primarily for propulsion of a vehicle with an automatic

transmission where that engine is subject to a transient duty cycle with idle operation. These deviations are intended to produce a more representative transient duty cycle for these applications. For steady-state duty cycles or transient duty cycles with no idle operation, these requirements do not apply. Idle points for steady state duty cycles of such engines are to be run at conditions simulating neutral or park on the transmission.

(i) Zero-percent speed is the warm idle speed measured according to §1065.510(b)(6) with CITT applied, *i.e.*, measured warm idle speed in drive.

(ii) If the cycle begins with a set of contiguous idle points (zero-percent speed, and zero-percent torque), leave the reference torques set to zero for this initial contiguous idle segment. This is to represent free idle operation with the transmission in neutral or park at the start of the transient duty cycle, after the engine is started. If the initial idle segment is longer than 24 seconds, change the reference torques for the remaining idle points in the initial contiguous idle segment to CITT (i.e., change idle points corresponding to 25 seconds to the end of the initial idle segment to CITT). This is to represent shifting the transmission to drive.

(iii) For all other idle points, change the reference torque to CITT. This is to represent the transmission operating in drive.

(iv) If the engine is intended primarily for automatic transmissions with a Neutral-When-Stationary feature that automatically shifts the transmission to neutral after the vehicle is stopped for a designated time and automatically shifts back to drive when the operator increases demand (*i.e.*, pushes the accelerator pedal), change the reference torque back to zero for idle points in drive after the designated time.

(v) For all points with normalized speed at or below zero percent and reference torque from zero to CITT, set the reference torque to CITT. This is to provide smoother torque references below idle speed.

(vi) For motoring points, make no changes.

(vii) For consecutive points with reference torques from zero to CITT that immediately follow idle points, change their reference torques to CITT. This is to provide smooth torque transition out of idle operation. This does not apply if the Neutral-When-Stationary feature is used and the transmission has shifted to neutral.

(viii) For consecutive points with reference torque from zero to CITT that immediately precede idle points, change their reference torques to CITT. This is to provide smooth torque transition into idle operation.

(4) *Permissible deviations for any engine.* If your engine does not operate below a certain minimum torque under normal in-use conditions, you may use a declared minimum torque as the reference value instead of any value denormalized to be less than the declared value. For example, if your engine is connected to a hydrostatic transmission and it has a minimum torque even when all the driven hydraulic actuators and motors are stationary and the engine is at idle, then you may use this declared minimum torque as a reference torque value instead of any reference torque value generated under paragraph (d)(1) or (2) of this section that is between zero and this declared minimum torque.

(e) *Generating reference power values from normalized duty cycle powers.* Transform normalized power values to reference speed and power values using your map of maximum power versus speed.

(1) First transform normalized speed values into reference speed values. For a given speed point, multiply the corresponding % power by the mapped power at maximum test speed, f_{ntest}, unless specified otherwise by the standard-setting part. The result is the reference power for each speed point, P_{ref}. Convert these reference powers to corresponding torques for operator demand and dynamometer control and for duty cycle validation per 1065.514. Use the reference speed associated with each reference power point for this conversion. As with cycles specified with % torque, linearly interpolate between these reference torque values generated from cycles with % power.

(2) Permissible deviations for any engine. If your engine does not operate below a certain power under normal in-use conditions, you may use a declared minimum power as the reference value instead of any value denormalized to be less than the declared value. For example, if your engine is directly connected to a propeller, it may have a minimum power called idle power. In this case, you may use this declared minimum power as a reference power value instead of any reference power value generated per paragraph (e)(1) of this section that is from zero to this declared minimum power.

[73 FR 37324, June 30, 2008, as amended at 73 FR 59330, Oct. 8, 2008; 75 FR 23045, Apr. 30, 2010; 76 FR 57453, Sept. 15, 2011; 78 FR 36398, June 17, 2013; 79 FR 23783, Apr. 28, 2014; 80 FR 9118, Feb. 19, 2015; 81 FR 74170, Oct. 25, 2016]

EFFECTIVE DATE NOTE: At 86 FR 34555, June 29, 2021, § 1065.610 was amended, effective July 29, 2021.

§ 1065.630 Local acceleration of gravity.

(a) The acceleration of Earth's gravity, a_g, varies depending on the test location. Determine a_g at your location by entering latitude, longitude, and elevation data into the U.S. National Oceanographic and Atmospheric Administration's surface gravity prediction Web site at *http://www.ngs.noaa.gov/cgi-bin/grav___pdx.prl.*

(b) If the Web site specified in paragraph (a) of this section is unavailable, you may calculate a_g for your latitude as follows:

$$a_g = 9.7803267715 \cdot [1 + 5.2790414 \cdot 10^{-3} \cdot \sin^2(\theta) + 2.32718 \cdot 10^{-5} \cdot \sin^4(\theta) + 1.262 \cdot 10^{-7} \cdot \sin^6(\theta) + 7 \cdot 10^{-10} \cdot \sin^8(\theta)]$$

Eq. 1065.630-1

Where:

θ = Degrees north or south latitude.

Example:

$\theta = 45°$

$a_g = 9.7803267715 \cdot (1 + 5.2790414 \cdot 10^{-3} \cdot \sin^2(45) + 2.32718 \cdot 10^{-5} \cdot \sin^4(45) + 1.262 \cdot 10^{-7} \cdot \sin^6(45) + 7 \cdot 10^{-10} \cdot \sin^8(45)$

$a_g = 9.8061992026$ m/s^2

[79 FR 23784, Apr. 28, 2014]

§ 1065.640 Flow meter calibration calculations.

This section describes the calculations for calibrating various flow meters. After you calibrate a flow meter using these calculations, use the calculations described in § 1065.642 to calculate flow during an emission test. Paragraph (a) of this section first describes how to convert reference flow meter outputs for use in the calibration equations, which are presented on a molar basis. The remaining paragraphs describe the calibration calculations that are specific to certain types of flow meters.

(a) *Reference meter conversions.* The calibration equations in this section use molar flow rate, $\dot{n}_{ref}$, as a reference quantity. If your reference meter outputs a flow rate in a different quantity, such as standard volume rate, $\dot{v}_{stdref}$, actual volume rate, $\dot{v}_{actref}$, or mass rate, $\dot{m}_{ref}$, convert your reference meter output to a molar flow rate using the following equations, noting that while values for volume rate, mass rate, pressure, temperature, and molar mass may change during an emission test, you should ensure that they are as constant as practical for each individual set point during a flow meter calibration:

$$\dot{n}_{\mathrm{ref}} = \frac{\dot{V}_{\mathrm{stdref}} \cdot p_{\mathrm{std}}}{T_{\mathrm{std}} \cdot R} = \frac{\dot{V}_{\mathrm{actref}} \cdot p_{\mathrm{act}}}{T_{\mathrm{act}} \cdot R} = \frac{\dot{m}_{\mathrm{ref}}}{M_{\mathrm{mix}}}$$

Eq. 1065.640-1

Where:

$\dot{n}_{\mathrm{ref}}$ = reference molar flow rate.

$\dot{v}_{\mathrm{stdref}}$ = reference volume flow rate, corrected to a standard pressure and a standard temperature.

$\dot{v}_{\mathrm{actref}}$ = reference volume flow rate at the actual pressure and temperature of the flow rate.

$\dot{m}_{\mathrm{ref}}$ = reference mass flow.

p_{std} = standard pressure.

p_{act} = actual pressure of the flow rate.

T_{std} = standard temperature.

T_{act} = actual temperature of the flow rate.

R = molar gas constant.

M_{mix} = molar mass of the flow rate.

Example 1:

$\dot{v}_{\mathrm{stdref}}$ = 1000.00 ft^3/min = 0.471948 m^3/s

p_{std} = 29.9213 in Hg @32 °F = 101.325 kPa = 101325 Pa = 101325 kg/(m·s^2)

T_{std} = 68.0 °F = 293.15 K

R = 8.314472 J/(mol·K) = 8.314472 (m^2·kg)/(s^2·mol·K)

$$\dot{n}_{\mathrm{ref}} = \frac{0.471948 \cdot 101325}{293.15 \cdot 8.314472}$$

$\dot{n}_{\mathrm{ref}}$ = 19.619 mol/s

Example 2:

$\dot{m}_{\mathrm{ref}}$ = 17.2683 kg/min = 287.805 g/s

$\dot{M}_{\mathrm{mix}}$ = 28.7805 g/mol

$$\dot{n}_{\mathrm{ref}} = \frac{287.805}{28.7805}$$

$\dot{n}_{\mathrm{ref}}$ = 10.0000 mol/s

(b) *PDP calibration calculations.* Perform the following steps to calibrate a PDP flow meter:

(1) Calculate PDP volume pumped per revolution, V_{rev}, for each restrictor position from the mean values determined in § 1065.340 as follows:

$$V_{\mathrm{rev}} = \frac{\overline{\dot{n}}_{\mathrm{ref}} \cdot R \cdot \overline{T}_{\mathrm{in}}}{\overline{p}_{\mathrm{in}} \cdot \overline{f}_{\mathrm{nPDP}}}$$

Eq. 1065.640-2

Where:

$\dot{n}_{\mathrm{ref}}$ = mean reference molar flow rate.

R = molar gas constant.

$\overline{T}_{\mathrm{in}}$ = mean temperature at the PDP inlet.

$\overline{P}_{\mathrm{in}}$ = mean static absolute pressure at the PDP inlet.

$\overline{f}_{\mathrm{nPDP}}$ = mean PDP speed.

Example:

$\dot{n}_{\mathrm{ref}}$ = 25.096 mol/s

R = 8.314472 J/(mol·K) = 8.314472 (m^2·kg)/(s^2·mol·K)

$\overline{T}_{\mathrm{in}}$ = 299.5 K

$\overline{P}_{\mathrm{in}}$ = 98.290 kPa = 98290 Pa = 98290 kg/(m·s^2)

$\overline{f}_{\mathrm{nPDP}}$ = 1205.1 r/min = 20.085 r/s

$$V_{rev} = \frac{25.096 \cdot 8.314472 \cdot 299.5}{98290 \cdot 20.085}$$

V_{rev} = 0.03166 m³/r

(2) Calculate a PDP slip correction factor, K_s, for each restrictor position from the mean values determined in § 1065.340 as follows:

$$K_s = \frac{1}{\overline{f}_{nPDP}} \cdot \sqrt{\frac{\overline{p}_{out} - \overline{p}_{in}}{\overline{p}_{out}}}$$

Eq. 1065.640-3

Where:
$\bar{f}_{nPDP}$ = mean PDP speed.
$\bar{P}_{out}$ = mean static absolute pressure at the PDP outlet.
$\bar{P}_{in}$ = mean static absolute pressure at the PDP inlet.

Example:
$\bar{f}_{nPDP}$ = 1205.1 r/min = 20.085 r/s
$\bar{P}_{out}$ = 100.103 kPa
$\bar{P}_{in}$ = 98.290 kPa

$$K_s = \frac{1}{20.085} \cdot \sqrt{\frac{100.103 - 98.290}{100.103}}$$

K_s = 0.006700 s/r

(3) Perform a least-squares regression of $V_{rev,}$ versus $K_{s,}$ by calculating slope, $a_{1,}$ and intercept, $a_{0,}$ as described in § 1065.602.

(4) Repeat the procedure in paragraphs (b)(1) through (3) of this section for every speed that you run your PDP.

(5) The following table illustrates a range of typical values for different PDP speeds:

TABLE 1 OF § 1065.640—EXAMPLE OF PDP CALIBRATION DATA

$\bar{f}_{nPDP}$ (revolution/s)	a_1 (m³/s)	a_0 (m³/revolution)
12.6	0.841	0.056
16.5	0.831	−0.013
20.9	0.809	0.028
23.4	0.788	−0.061

(6) For each speed at which you operate the PDP, use the appropriate regression equation from this paragraph (b) to calculate flow rate during emission testing as described in § 1065.642.

(c) *Venturi governing equations and permissible assumptions.* This section describes the governing equations and permissible assumptions for calibrating a venturi and calculating flow using a venturi. Because a subsonic venturi (SSV) and a critical-flow venturi (CFV) both operate similarly, their governing equations are nearly the same, except for the equation describing their pressure ratio, r (*i.e.*, r_{SSV} versus r_{CFV}). These governing equations assume one-dimensional isentropic

inviscid flow of an ideal gas. Paragraph (c)(5) of this section describes other assumptions that may apply. If good engineering judgment dictates that you account for gas compressibility, you may either use an appropriate equation of state to determine values of Z as a function of measured pressure and temperature, or you may develop your own calibration equations based on good engineering judgment. Note that the equation for the flow coefficient, C_f, is based on the ideal gas assumption that the isentropic exponent, γ, is equal to the ratio of specific heats, C_p/C_v. If good engineering judgment dictates using a real gas isentropic exponent, you may either use an appropriate equation of state to determine values of γ as a function of measured pressures and temperatures, or you may develop your own calibration equations based on good engineering judgment.

(1) Calculate molar flow rate, $\dot{n}$, as follows:

$$\dot{n} = C_d \cdot C_f \cdot \frac{A_t \cdot p_{in}}{\sqrt{Z \cdot M_{mix} \cdot R \cdot T_{in}}}$$

Eq. 1065.640-4

Where:

C_d = discharge coefficient, as determined in paragraph (c)(2) of this section.

C_f = flow coefficient, as determined in paragraph (c)(3) of this section.

A_t = venturi throat cross-sectional area.

p_{in} = venturi inlet absolute static pressure.

Z = compressibility factor.

M_{mix} = molar mass of gas mixture.

R = molar gas constant.

T_{in} = venturi inlet absolute temperature.

(2) Using the data collected in §1065.340, calculate C_d for each flow rate using the following equation:

$$C_d = \dot{n}_{ref} \cdot \frac{\sqrt{Z \cdot M_{mix} \cdot R \cdot T_{in}}}{C_f \cdot A_t \cdot p_{in}}$$

Eq. 1065.640-5

Where:

$\dot{n}_{ref}$ = a reference molar flow rate.

(3) Determine C_f using one of the following methods:

(i) For CFV flow meters only, determine C_{fCFV} from the following table based on your values for β and γ, using linear interpolation to find intermediate values:

TABLE 2 OF §1065.640–C_{fCFV} VERSUS β AND γ FOR CFV FLOW METERS

C_{fCFV}		
β	γ_{exh} = 385	γ_{dexh} = γ_{air} = 399
0.000	0.6822	0.6846
0.400	0.6857	0.6881
0.500	0.6910	0.6934
0.550	0.6953	0.6977
0.600	0.7011	0.7036
0.625	0.7047	0.7072
0.650	0.7089	0.7114
0.675	0.7137	0.7163
0.700	0.7193	0.7219
0.720	0.7245	0.7271
0.740	0.7303	0.7329
0.760	0.7368	0.7395
0.770	0.7404	0.7431

TABLE 2 OF § 1065.640–C_{fCFV} VERSUS β AND γ FOR CFV FLOW METERS—Continued

C_{fCFV}		
β	γ_{exh} = 385	γ_{dexh} = γ_{air} = 399
0.780	0.7442	0.7470
0.790	0.7483	0.7511
0.800	0.7527	0.7555
0.810	0.7573	0.7602
0.820	0.7624	0.7652
0.830	0.7677	0.7707
0.840	0.7735	0.7765

TABLE 2 OF § 1065.640–C_{fCFV} VERSUS β AND γ FOR CFV FLOW METERS—Continued

C_{fCFV}		
β	γ_{exh} = 385	γ_{dexh} = γ_{air} = 399
0.850	0.7798	0.7828

(ii) For any CFV or SSV flow meter, you may use the following equation to calculate C_f for each flow rate:

$$C_f = \left[\frac{2 \cdot \gamma \cdot \left(r^{\frac{\gamma-1}{\gamma}} - 1 \right)}{(\gamma - 1) \cdot \left(\beta^4 - r^{\frac{-2}{\gamma}} \right)} \right]^{\frac{1}{2}}$$

Eq. 1065.640-6

Where:

γ = isentropic exponent. For an ideal gas, this is the ratio of specific heats of the gas mixture, C_p/C_v.

r = pressure ratio, as determined in paragraph (c)(4) of this section.

β = ratio of venturi throat to inlet diameters.

(4) Calculate r as follows:

(i) For SSV systems only, calculate r_{SSV} using the following equation:

$$r_{SSV} = 1 - \frac{\Delta p_{SSV}}{p_{in}}$$

Eq. 1065.640-7

Where:

Δp_{SSV} = Differential static pressure; venturi inlet minus venturi throat.

(ii) For CFV systems only, calculate r_{CFV} iteratively using the following equation:

$$r_{CFV}^{\frac{1-\gamma}{\gamma}} + \left(\frac{\gamma - 1}{2} \right) \cdot \beta^4 \cdot r_{CFV}^{\frac{2}{\gamma}} = \frac{\gamma + 1}{2}$$

Eq. 1065.640-8

(5) You may apply any of the following simplifying assumptions or develop other values as appropriate for your test configuration, consistent with good engineering judgment:

(i) For raw exhaust, diluted exhaust, and dilution air, you may assume that the gas mixture behaves as an ideal gas: $Z = 1$.

(ii) For raw exhaust, you may assume $\gamma = 1.385$.

(iii) For diluted exhaust and dilution air, you may assume $\gamma = 1.399$.

(iv) For diluted exhaust and dilution air, you may assume the molar mass of the mixture, M_{mix}, is a function only of the amount of water in the dilution air or calibration air, as follows:

$$M_{mix} = M_{air} \cdot (1 - x_{H2O}) + M_{H2O} \cdot x_{H2O}$$

Eq. 1065.640-9

Where:

M_{air} = molar mass of dry air.

x_{H2O} = amount of H_2O in the dilution air or calibration air, determined as described in § 1065.645.

M_{H2O} = molar mass of water.

Example:

M_{air} = 28.96559 g/mol

x_{H2O} = 0.0169 mol/mol

M_{H2O} = 18.01528 g/mol

M_{mix} = 28.96559 · (1– 0.0169) + 18.01528 · 0.0169

M_{mix} = 28.7805 g/mol

(v) For diluted exhaust and dilution air, you may assume a constant molar mass of the mixture, M_{mix}, for all calibration and all testing as long as your assumed molar mass differs no more than ±1% from the estimated minimum and maximum molar mass during calibration and testing.

You may assume this, using good engineering judgment, if you sufficiently control the amount of water in calibration air and in dilution air or if you remove sufficient water from both calibration air and dilution air. The following table gives examples of permissible ranges of dilution air dewpoint versus calibration air dewpoint:

TABLE 3 OF § 1065.640—EXAMPLES OF DILUTION AIR AND CALIBRATION AIRDEWPOINTS AT WHICH YOU MAY ASSUME A CONSTANT M_{mix}

If calibration T_{dew} (°C) is . . .	assume the following constant M_{mix} (g/mol) . . .	for the following ranges of T_{dew} (°C) during emission tests [a]
dry	28.96559	dry to 18

TABLE 3 OF § 1065.640—EXAMPLES OF DILUTION AIR AND CALIBRATION AIRDEWPOINTS AT WHICH YOU MAY ASSUME A CONSTANT M_{mix}—Continued

If calibration T_{dew} (°C) is . . .	assume the following constant M_{mix} (g/mol) . . .	for the following ranges of T_{dew} (°C) during emission tests [a]
0	28.89263	dry to 21
5	28.86148	dry to 22
10	28.81911	dry to 24
15	28.76224	dry to 26
20	28.68685	–8 to 28
25	28.58806	12 to 31
30	28.46005	23 to 34

[a] Range valid for all calibration and emission testing over the atmospheric pressure range (80.000 to 103.325) kPa.

(6) The following example illustrates the use of the governing equations to calculate C_d of an SSV flow meter at one reference flow meter value. Note that calculating C_d for a CFV flow meter would be similar, except that C_f would be determined from Table 2 of this section or calculated iteratively using values of β and γ as described in paragraph (c)(2) of this section.

Example:

$\dot{n}_{ref}$ = 57.625 mol/s

$Z = 1$

M_{mix} = 28.7805 g/mol = 0.0287805 kg/mol

R = 8.314472 J/(mol · K) = 8.314472 (m^2 · kg)/(s^2 · mol · K)

T_{in} = 298.15 K

A_t = 0.01824 m^2

p_{in} = 99.132 kPa = 99132.0 Pa = 99132 kg/(m·s^2)

$\gamma = 1.399$

$\beta = 0.8$

Δp = 2.312 kPa

$$r_{SSV} = 1 - \frac{2.312}{99.132} = 0.977$$

$$C_f = \left[\frac{2 \cdot 1.399 \cdot \left(0.977^{\frac{1.399-1}{1.399}} - 1\right)}{(1.399-1) \cdot \left(0.8^4 - 0.977^{\frac{-2}{1.399}}\right)} \right]^{\frac{1}{2}}$$

$C_f = 0.274$

$$C_d = 57.625 \cdot \frac{\sqrt{1 \cdot 0.0287805 \cdot 8.314472 \cdot 298.15}}{0.274 \cdot 0.01824 \cdot 99132.0}$$

$C_d = 0.982$

(d) *SSV calibration*. Perform the following steps to calibrate an SSV flow meter:

(1) Calculate the Reynolds number, $Re^{\#}$, for each reference molar flow rate, $\dot{n}_{ref}$, using the throat diameter of the venturi, d_t. Because the dynamic viscosity, μ, is needed to compute $Re^{\#}$, you may use your own fluid viscosity model to determine μ for your calibration gas (usually air), using good engineering judgment. Alternatively, you may use the Sutherland three-coefficient viscosity model to approximate μ, as shown in the following sample calculation for $Re^{\#}$:

$$Re^{\#} = \frac{4 \cdot M_{mix} \cdot \dot{n}_{ref}}{\pi \cdot d_t \cdot \mu}$$

Eq. 1065.640-10

Where, using the Sutherland three-coefficient viscosity model:

$$\mu = \mu_0 \cdot \left(\frac{T_{in}}{T_0}\right)^{\frac{3}{2}} \cdot \left(\frac{T_0 + S}{T_{in} + S}\right)$$

Eq. 1065.640-11

Where:

μ_0 = Sutherland reference viscosity.

T_0 = Sutherland reference temperature.

S = Sutherland constant.

TABLE 4 OF § 1065.640—SUTHERLAND THREE-COEFFICIENT VISCOSITY MODEL PARAMETERS

Gas [a]	μ_0	T_0	S	Temperature range within ± 2% error [b]	Pressure limit [b]
	kg/(m·s)	K	K	K	kPa
Air	$1.716 \cdot 10^{-5}$	273	111	170 to 1900	≤ 1800
CO_2	$1.370 \cdot 10^{-5}$	273	222	190 to 1700	≤ 3600
H_2	$1.12 \cdot 10^{-5}$	350	1064	360 to 1500	≤ 10000
O_2	$1.919 \cdot 10^{-5}$	273	139	190 to 2000	≤ 2500
N_2	$1.663 \cdot 10^{-5}$	273	107	100 to 1500	≤ 1600

[a] Use tabulated parameters only for the pure gases, as listed. Do not combine parameters in calculations to calculate viscosities of gas mixtures.
[b] The model results are valid only for ambient conditions in the specified ranges.

Example:
$\mu_0 = 1.716 \cdot 10^{-5}$ kg/(m·s)
$T_0 = 273$ K
$S = 111$ K

$$\mu = 1.716 \cdot 10^{-5} \cdot \left(\frac{298.15}{273}\right)^{\frac{3}{2}} \cdot \left(\frac{273+111}{298.15+111}\right)$$

$\mu = 1.838 \cdot 10^{-5}$ kg/(m·s)
$M_{mix} = 28.7805$ g/mol
$\dot{n}_{ref} = 57.625$ mol/s
$d_t = 152.4$ mm = 0.1524 m
$T_{in} = 298.15$ K

$$Re^{\#} = \frac{4 \cdot 28.7805 \cdot 57.625}{3.14159 \cdot 0.1524 \cdot 1.838 \cdot 10^{-5}}$$

$Re^{\#} = 7.538 \cdot 10^{8}$

(2) Create an equation for C_d as a function of $Re^{\#}$, using paired values of the two quantities. The equation may involve any mathematical expression, including a polynomial or a power series. The following equation is an example of a commonly used mathematical expression for relating C_d and $Re^{\#}$:

$$C_d = a_0 - a_1 \cdot \sqrt{\frac{10^6}{Re^{\#}}}$$

Eq. 1065.640-12

(3) Perform a least-squares regression analysis to determine the best-fit coefficients for the equation and calculate *SEE* as described in § 1065.602.

(4) If the equation meets the criterion of $SEE \leq 0.5\% \cdot C_{dmax}$, you may use the equation for the corresponding range of $Re^{\#}$, as described in § 1065.642.

(5) If the equation does not meet the specified statistical criterion, you may use good engineering judgment to omit calibration data points; however you must use at least seven calibration

data points to demonstrate that you meet the criterion. For example, this may involve narrowing the range of flow rates for a better curve fit.

(6) Take corrective action if the equation does not meet the specified statistical criterion even after omitting calibration data points. For example, select another mathematical expression for the C_d versus $Re^{\#}$ equation, check for leaks, or repeat the calibration process. If you must repeat the calibration process, we recommend applying tighter tolerances to measurements and allowing more time for flows to stabilize.

(7) Once you have an equation that meets the specified statistical criterion, you may use the equation only for the corresponding range of $Re^{\#}$.

(e) *CFV calibration.* Some CFV flow meters consist of a single venturi and some consist of multiple venturis, where different combinations of venturis are used to meter different flow rates. For CFV flow meters that consist of multiple venturis, either calibrate each venturi independently to determine a separate discharge coefficient, C_d, for each venturi, or calibrate each combination of venturis as one venturi. In the case where you calibrate a combination of venturis, use the sum of the active venturi throat areas as A_t, the square root of the sum of the squares of the active venturi throat diameters as d_t, and the ratio of the venturi throat to inlet diameters as the ratio of the square root of the sum of the active venturi throat diameters (d_t) to the diameter of the common entrance to all the venturis. (D). To determine the C_d for a single venturi or a single combination of venturis, perform the following steps:

(1) Use the data collected at each calibration set point to calculate an individual C_d for each point using Eq. 1065.640–4.

(2) Calculate the mean and standard deviation of all the C_d values according to Eqs. 1065.602–1 and 1065.602–2.

(3) If the standard deviation of all the C_d values is less than or equal to 0.3% of the mean C_d, use the mean C_d in Eq. 1065.642–4, and use the CFV only up to the highest venturi pressure ratio, r, measured during calibration using the following equation:

$$r = 1 - \frac{\Delta p_{\mathrm{CFV}}}{p_{\mathrm{in}}}$$

Eq. 1065.640-13

Where:

Δp_{CFV} = Differential static pressure; venturi inlet minus venturi outlet.

(4) If the standard deviation of all the C_d values exceeds 0.3% of the mean C_d, omit the C_d value corresponding to the data point collected at the highest r measured during calibration.

(5) If the number of remaining data points is less than seven, take corrective action by checking your calibration data or repeating the calibration process. If you repeat the calibration process, we recommend checking for leaks, applying tighter tolerances to measurements and allowing more time for flows to stabilize.

(6) If the number of remaining C_d values is seven or greater, recalculate the mean and standard deviation of the remaining C_d values.

(7) If the standard deviation of the remaining C_d values is less than or equal to 0.3% of the mean of the remaining C_d, use that mean C_d in Eq. 1065.642–4, and use the CFV values only up to the highest r associated with the remaining C_d.

(8) If the standard deviation of the remaining C_d still exceeds 0.3% of the

mean of the remaining C_d values, repeat the steps in paragraph (e)(4) through (8) of this section.

[79 FR 23785, Apr. 28, 2014, as amended at 81 FR 74172, Oct. 25, 2016]

EFFECTIVE DATE NOTE: At 86 FR 34556, June 29, 2021, § 1065.640 was amended, effective July 29, 2021.

§ 1065.642 PDP, SSV, and CFV molar flow rate calculations.

This section describes the equations for calculating molar flow rates from various flow meters. After you calibrate a flow meter according to § 1065.640, use the calculations described in this section to calculate flow during an emission test.

(a) *PDP molar flow rate.* (1) Based on the speed at which you operate the PDP for a test interval, select the corresponding slope, a_1, and intercept, a_0, as calculated in § 1065.640, to calculate PDP molar flow rate,, as follows:

$$\dot{n} = f_{\mathrm{nPDP}} \cdot \frac{V_{\mathrm{rev}} \cdot p_{\mathrm{in}}}{R \cdot T_{\mathrm{in}}}$$

Eq. 1065.642-1

Where:

f_{nPDP} = pump speed.

V_{rev} = PDP volume pumped per revolution, as determined in paragraph (a)(2) of this section.

p_{in} = static absolute pressure at the PDP inlet.

R = molar gas constant.

T_{in} = absolute temperature at the PDP inlet.

(2) Calculate V_{rev} using the following equation:

$$V_{\mathrm{rev}} = \frac{a_1}{f_{\mathrm{nPDP}}} \cdot \sqrt{\frac{p_{\mathrm{out}} - p_{\mathrm{in}}}{p_{\mathrm{out}}}} + a_0$$

Eq. 1065.642-2

p_{out} = static absolute pressure at the PDP outlet.

Example:

a_1 = 0.8405 (m^3/s)

f_{nPDP} = 12.58 r/s

P_{out} = 99.950 kPa

P_{in} = 98.575 kPa = 98575 Pa = 98575 kg/(m·s^2)

a_0 = 0.056 (m^3/r)

R = 8.314472 J/(mol·K) = 8.314472 (m^2·kg)/(s^2·mol·K)

T_{in} = 323.5 K

$$V_{\mathrm{rev}} = \frac{0.8405}{12.58} \cdot \sqrt{\frac{99.950 - 98.575}{99.950}} + 0.056$$

$$\dot{n} = 12.58 \cdot \frac{98575 \cdot 0.06383}{8.314472 \cdot 323.5}$$

$\dot{n}$ = 29.428 mol/s

(b) *SSV molar flow rate.* Calculate SSV molar flow rate, $\dot{n}$, as follows:

$$\dot{n} = C_d \cdot C_f \cdot \frac{A_t \cdot p_{in}}{\sqrt{Z \cdot M_{mix} \cdot R \cdot T_{in}}}$$

Eq. 1065.642-3

Where:

C_d = discharge coefficient, as determined based on the C_d versus $Re^{\#}$ *equation in §1065.640(d)(2).*

C_f = flow coefficient, as determined in §1065.640(c)(2)(ii).

A_t = venturi throat cross-sectional area.

P_{in} = static absolute pressure at the venturi inlet.

Z = compressibility factor.

M_{mix} = molar mass of gas mixture.

R = molar gas constant.

T_{in} = absolute temperature at the venturi inlet.

Example:

A_t = 0.01824 m^2

p_{in} = 99.132 kPa = 99132 Pa = 99132 kg/(m·s^2)

Z = 1

M_{mix} = 28.7805 g/mol = 0.0287805 kg/mol

R = 8.314472 J/(mol·K) = 8.314472 (m^2·kg)/(s^2·mol·K)

T_{in} = 298.15 K

$Re^{\#}$ = 7.232·10^5

γ = 1.399

β = 0.8

Δp = 2.312 kPa

Using Eq. 1065.640–7, r_{ssv} = 0.997

Using Eq. 1065.640–6, C_f = 0.274

Using Eq. 1065.640–5, C_d = 0.990

$$\dot{n} = 0.990 \cdot 0.274 \cdot \frac{0.01824 \cdot 99132}{\sqrt{1 \cdot 0.0287805 \cdot 8.314472 \cdot 298.15}}$$

$\dot{n}$ = 58.173 mol/s

(c) *CFV molar flow rate.* If you use multiple venturis and you calibrate each venturi independently to determine a separate discharge coefficient, C_d (or calibration coefficient, K_v), for each venturi, calculate the individual molar flow rates through each venturi and sum all their flow rates to determine CFV flow rate, $\dot{n}$. If you use multiple venturis and you calibrated venturis in combination, calculate $\dot{n}$ using the sum of the active venturi throat areas as A_t, the square root of the sum of the squares of the active venturi throat diameters as d_t, and the ratio of the venturi throat to inlet diameters as the ratio of the square root of the sum of the active venturi throat diameters (d_t) to the diameter of the common entrance to all the venturis (D).

(1) To calculate $\dot{n}$ through one venturi or one combination of venturis, use its respective mean C_d and other constants you determined according to §1065.640 and calculate $\dot{n}$ as follows:

$$\dot{n} = C_d \cdot C_f \cdot \frac{A_t \cdot p_{in}}{\sqrt{Z \cdot M_{mix} \cdot R \cdot T_{in}}}$$

Eq. 1065.642-4

Example:
C_d = 0.985
C_f = 0.7219
A_t = 0.00456 m^2
p_{in} = 98.836 kPa = 98836 Pa = 98836 kg/(m·s^2)
Z = 1
M_{mix} = 28.7805 g/mol = 0.0287805 kg/mol
R = 8.314472 J/(mol·K) = 8.314472 (m^2·kg)/(s^2·mol·K)
T_{in} = 378.15 K

$$\dot{n} = 0.985 \cdot 0.7219 \cdot \frac{0.00456 \cdot 98836}{\sqrt{1 \cdot 0.0287805 \cdot 8.314472 \cdot 378.15}}$$

$\dot{n}$ = 33.690 mol/s

(2) To calculate the molar flow rate through one venturi or a combination of venturis, you may use its respective mean, K_v, and other constants you determined according to §1065.640 and calculate its molar flow rate $\dot{n}$ during an emission test. Note that if you follow the permissible ranges of dilution air dewpoint versus calibration air dewpoint in Table 3 of §1065.640, you may set $M_{mix\text{-}cal}$ and M_{mix} equal to 1. Calculate $\dot{n}$ as follows:

$$\dot{n} = \frac{K_v \cdot p_{in}}{\sqrt{T_{in}}} \cdot \frac{p_{std}}{T_{std} \cdot R} \cdot \frac{\sqrt{M_{mix\text{-}cal}}}{\sqrt{M_{mix}}}$$

Eq. 1065.642-5

Where:

$$K_v = \frac{V_{stdref} \cdot \sqrt{T_{in\text{-}cal}}}{p_{in\text{-}cal}}$$

Eq. 1065.642-6

V_{stdref} = volume flow rate of the standard at reference conditions of 293.15 K and 101.325 kPa.
$T_{in\text{-}cal}$ = venturi inlet temperature during calibration.
$P_{in\text{-}cal}$ = venturi inlet pressure during calibration.
$M_{mix\text{-}cal}$ = molar mass of gas mixture used during calibration.
M_{mix} = molar mass of gas mixture during the emission test calculated using Eq. 1065.640–9.

Example:
V_{stdref} = 0.4895 m^3

$T_{in\text{-}cal}$ = 302.52 K
$P_{in\text{-}cal}$ = 99.654 kPa = 99654 Pa = 99654 kg/(m·s²)
p_{in} = 98.836 kPa = 98836 Pa = 98836 kg/(m·s²)
p_{std} = 101.325 kPa = 101325 Pa = 101325 kg/(m·s²)
$M_{mix\text{-}cal}$ = 28.9656 g/mol = 0.0289656 kg/mol
M_{mix} = 28.7805 g/mol = 0.0287805 kg/mol
T_{in} = 353.15 K
T_{std} = 293.15 K
R = 8.314472 J/(mol·K) = 8.314472 (m²·kg)/(s²·mol·K)

$$K_v = \frac{0.4895 \cdot \sqrt{302.52}}{99654} = 0.000074954 \ \mathrm{m^4 \cdot s \cdot K^{0.5}/kg}$$

$$\dot{n} = \frac{0.000074954 \cdot 98936}{\sqrt{353.15}} \cdot \frac{101325}{293.15 \cdot 8.314472} \cdot \frac{\sqrt{0.0289656}}{\sqrt{0.0287805}}$$

$\dot{n}$ = 16.457 mol/s

[81 FR 74177, Oct. 25, 2016]

EFFECTIVE DATE NOTE: At 86 FR 34557, June 29, 2021, § 1065.642 was amended, effective July 29, 2021.

§ 1065.643 Carbon balance error verification calculations.

This section describes how to calculate quantities used in the carbon balance error verification described in § 1065.543. Paragraphs (a) through (c) of this section describe how to calculate the mass of carbon for a test interval from carbon-carrying fluid streams, intake air into the system, and exhaust emissions, respectively. Paragraph (d) of this section describes how to use these carbon masses to calculate four different quantities for evaluating carbon balance error. Use rectangular or trapezoidal integration methods to calculate masses and amounts over a test interval from continuously measured or calculated mass and molar flow rates.

(a) *Fuel and other fluids.* Determine the mass of fuel, DEF, and other carbon-carrying fluid streams, other than intake air, flowing into the system, m_{fluidj}, for each test interval. Note that § 1065.543 allows you to omit all flows other than fuel. You may determine the mass of DEF based on ECM signals for DEF flow rate. You may determine fuel mass during field testing based on ECM signals for fuel flow rate. Calculate the mass of carbon from the combined carbon-carrying fluid streams flowing into the system as follows:

$$m_{Cfluid} = \sum_{j=1}^{N} \left(w_{Cj} \cdot m_{fluidj} \right)$$

Eq. 1065.643-1

Where:

j = an indexing variable that represents one carbon-carrying fluid stream.

N = total number of carbon-carrying fluid streams into the system over the test interval.

w_C = carbon mass fraction of the carbon-carrying fluid stream as determined in § 1065.655(d).

m_{fluid} = the mass of the carbon-carrying fluid stream determined over the test interval.

Example:

N = 2
w_{Cfuel} = 0.869
w_{CDEF} = 0.065
m_{fuel} = 1119.6 g
m_{DEF} = 36.8 g

m_{Cfluid} = 0.869·1119.6 + 0.065·36.8 = 975.3 g

(b) *Intake air*. Calculate the mass of carbon in the intake air, m_{Cair}, for each test interval using one of the methods in this paragraph (b). The methods are listed in order of preference. Use the first method where all the inputs are available for your test configuration. For methods that calculate m_{Cair} based on the amount of CO_2 per mole of intake air, we recommend measuring intake air concentration, but you may calculate x_{CO2int} using Eq. 1065.655–10 and letting $x_{CO2intdry}$ = 375 μmol/mol.

(1) Calculate m_{Cair}, using the following equation if you measure intake air flow:

$$m_{Cair} = M_C \cdot n_{int} \cdot x_{CO2int}$$

Eq. 1065.643-2

Where:

M_C = molar mass of carbon.

n_{int} = measured amount of intake air over the test interval.

x_{CO2int} = amount of intake air CO_2 per mole of intake air.

Example:

M_C = 12.0107 g/mol

n_{int} = 62862 mol

x_{CO2int} = 369 μmol/mol = 0.000369 mol/mol

m_{Cair} = 12.0107·62862·0.000369 = 278.6 g

(2) Calculate m_{Cair}, using the following equation if you measure or calculate raw exhaust flow and you calculate chemical balance terms:

$$m_{Cair} = M_C \cdot n_{exh} \cdot \left(1 - x_{H2Oexh}\right) \cdot x_{CO2int} \cdot \left(x_{dil/exhdry} + x_{int/exhdry}\right)$$

Eq. 1065.643-3

Where:

M_C = molar mass of carbon.

n_{exh} = calculated or measured amount of raw exhaust over the test interval.

x_{H2Oexh} = amount of H_2O in exhaust per mole of exhaust.

x_{CO2int} = amount of intake air CO_2 per mole of intake air.

$x_{dil/exhdry}$ = amount of excess air per mole of dry exhaust. Note that excess air and intake air have the same composition, so $x_{CO2dil} = x_{CO2int}$ and $x_{H2Odil} = x_{H2Oint}$ for the chemical balance calculation for raw exhaust.

$x_{int/exhdry}$ = amount of intake air required to produce actual combustion products per mole of dry exhaust.

Example:

M_C = 12.0107 g/mol

n_{exh} = 62862 mol

x_{H2Oexh} = 0.034 mol/mol

x_{CO2int} = 369 μmol/mol = 0.000369 mol/mol

$x_{dil/exhdry}$ = 0.570 mol/mol

$x_{int/exhdry}$ = 0.465 mol/mol

m_{Cair} = 12.0107·62862·(1 − 0.034)·0.000369·(0.570 + 0.465) = 278.6 g

(3) Calculate m_{Cair}, using the following equation if you measure raw exhaust flow:

$$m_{\mathrm{Cair}} = M_{\mathrm{C}} \cdot n_{\mathrm{exh}} \cdot x_{\mathrm{CO2int}}$$

Eq. 1065.643-4

Where:

M_C = molar mass of carbon.

n_{exh} = measured amount of raw exhaust over the test interval.

x_{CO2int} = amount of intake air CO_2 per mole of intake air.

Example:

M_C = 12.0107 g/mol

n_{exh} = 62862 mol

x_{CO2int} = 369 μmol/mol = 0.000369 mol/mol

m_{Cair} = 12.0107·62862·0.000369 = 278.6 g

(4) Calculate m_{Cair}, using the following equation if you measure diluted exhaust flow and dilution air flow:

$$m_{\mathrm{Cair}} = M_{\mathrm{C}} \cdot \left(n_{\mathrm{dexh}} - n_{\mathrm{dil}}\right) \cdot x_{\mathrm{CO2int}}$$

Eq. 1065.643-5

Where:

M_C = molar mass of carbon.

n_{dexh} = measured amount of diluted exhaust over the test interval as determined in §1065.642.

n_{dil} = measured amount of dilution air over the test interval as determined in §1065.667(b).

x_{CO2int} = amount of intake air CO_2 per mole of intake air.

Example:

M_C = 12.0107 g/mol

n_{dexh} = 942930 mol

n_{dil} = 880068 mol

x_{CO2int} = 369 μmol/mol = 0.000369 mol/mol

m_{Cair} = 12.0107·(942930 − 880068)·0.000369 = 278.6 g

(5) Determined m_{Cair} based on ECM signals for intake air flow as described in paragraph (b)(1) of this section.

(6) If you measure diluted exhaust, determine m_{Cair} as described in paragraph (b)(4) of this section using a calculated amount of dilution air over the test interval as determined in §1065.667(d) instead of the measured amount of dilution air.

(c) *Exhaust emissions.* Calculate the mass of carbon in exhaust emissions, m_{Cexh}, for each test interval as follows:

$$m_{\mathrm{Cexh}} = M_{\mathrm{C}} \cdot \left(\frac{m_{\mathrm{CO2}}}{M_{\mathrm{CO2}}} + \frac{m_{\mathrm{CO}}}{M_{\mathrm{CO}}} + \frac{m_{\mathrm{THC}}}{M_{\mathrm{THC}}} \right)$$

Eq. 1065.643-6

Where:

M_C = molar mass of carbon.

m_{CO2} = mass of CO_2 over the test interval as determined in §1065.650(c).

M_{CO2} = molar mass of carbon dioxide.

m_{CO} = mass of CO over the test interval as determined in §1065.650(c).

M_{CO} = molar mass of carbon monoxide.

m_{THC} = mass of THC over the test interval as determined in §1065.650(c).

M_{THC} = effective C_1 molar mass of total hydrocarbon as defined in §1065.1005(f)(2).

Example:

M_C = 12.0107 g/mol
m_{CO2} = 4567 g
M_{CO2} = 44.0095 g/mol
m_{CO} = 0.803 g
M_{CO} = 28.0101 g/mol
m_{THC} = 0.537 g
M_{THC} = 13.875389 g/mol

$$m_{Cexh} = 12.0107 \cdot \left(\frac{4567}{44.0095} + \frac{0.803}{28.0101} + \frac{0.537}{13.875389} \right) = 1247.2 \text{ g}$$

(d) *Carbon balance error quantities.* Calculate carbon balance error quantities as follows:

(1) Calculate carbon mass absolute error, ε_{aC}, for a test interval as follows:

$$\epsilon_{aC} = m_{Cexh} - m_{Cfluid} - m_{Cair}$$

Eq. 1065.643-7

Where:

m_{Cexh} = mass of carbon in exhaust emissions over the test interval as determined in paragraph (d) of this section.

m_{Cfluid} = mass of carbon in all the carbon-carrying fluid streams flowing into the system over the test interval as determined in paragraph (a) of this section.

m_{Cair} = mass of carbon in the intake air flowing into the system over the test interval as determined in paragraph (b) of this section.

Example:

m_{Cexh} = 1247.2 g
m_{Cfluid} = 975.3 g
m_{Cair} = 278.6 g
$\grave{O}_{aC}$ = 1247.2 − 975.3 − 278.6 = −6.7 g

(2) Calculate carbon mass rate absolute error, $\in_{aCrate}$, for a test interval as follows:

$$\epsilon_{aCrate} = \frac{\epsilon_{aC}}{t}$$

Eq. 1065.643-8

Where:

t = duration of the test interval.

Example:

$\in_{aC}$ = −6.7 g
t = 1202.2 s = 0.3339 hr

$$\epsilon_{aCrate} = \frac{-6.7}{0.3339} = -20.065 \text{ g/hr}$$

(3) Calculate carbon mass relative error, ϵ_{rC}, for a test interval as follows:

$$\epsilon_{rC} = \frac{\epsilon_{aC}}{m_{Cfluid} + m_{Cair}}$$

Eq. 1065.643-9

Example:

ϵ_{aC} = −6.7 g

m_{Cfliud} = 975.3 g

m_{Cair} = 278.6 g

$$\epsilon_{rC} = \frac{-6.7}{975.3 + 278.6} = -0.0053$$

(4) Calculate composite carbon mass relative error, ϵ_{rCcomp}, for a duty cycle with multiple test intervals as follows:

(i) Calculate ϵ_{rCcomp} using the following equation:

$$\epsilon_{rCcomp} = \frac{\sum_{i=1}^{N} WF_i \cdot \frac{\left(m_{Cexhi} - m_{Cfluidi} - m_{Cairi}\right)}{t_i}}{\sum_{i=1}^{N} WF_i \cdot \frac{\left(m_{Cfluidi} + m_{Cairi}\right)}{t_i}}$$

Eq. 1065.643-10

Where:

i = an indexing variable that represents one test interval.

N = number of test intervals.

WF = weighting factor for the test interval as defined in the standard-setting part.

m_{Cexh} = mass of carbon in exhaust emissions over the test interval as determined in paragraph (c) of this section.

m_{Cfluid} = mass of carbon in all the carbon-carrying fluid streams that flowed into the system over the test interval as determined in paragraph (a) of this section.

m_{Cair} = mass of carbon in the intake air that flowed into the system over the test interval as determined in paragraph (b) of this section.

t = duration of the test interval. For duty cycles with multiple test intervals of a prescribed duration, such as cold-start and hot-start transient cycles, set t = 1 for all test intervals. For discrete-mode steady-state duty cycles with multiple test intervals of varying duration, set t equal to the actual duration of each test interval.

(ii) The following example illustrates calculation of ϵ_{rCcomp}, for cold-start and hot-start transient cycles:

N = 2

WF_1 = 1/7

WF_2 = 6/7

m_{Cexh1} = 1255.3 g

m_{Cexh2} = 1247.2 g

$m_{Cfluid1}$ = 977.8 g

$m_{Cfluid2}$ = 975.3 g

m_{Cair1} = 280.2 g

m_{Cair2} = 278.6 g

$$\epsilon_{rCcomp} = \frac{\frac{1}{7}\cdot\frac{(1255.3-977.8-280.2)}{1}+\frac{6}{7}\cdot\frac{(1247.2-975.3-278.6)}{1}}{\frac{1}{7}\cdot\frac{(977.8+280.2)}{1}+\frac{6}{7}\cdot\frac{(975.3+278.6)}{1}} = -0.0049$$

(iii) The following example illustrates calculation of ϵ_{rCcomp} for multiple test intervals with varying duration, such as discrete-mode steady-state duty cycles:

$N = 2$
$WF_1 = 0.85$
$WF_2 = 0.15$
$m_{Cexh1} = 2.873$ g
$m_{Cexh2} = 0.125$ g
$m_{Cfluid1} = 2.864$ g
$m_{Cfluid2} = 0.095$ g
$m_{Cair1} = 0.023$ g
$m_{Cair2} = 0.024$ g
$t_1 = 123$ s
$t_2 = 306$ s

$$\epsilon_{rCcomp} = \frac{0.85\cdot\left(\frac{2.873-2.864-0.023}{123}\right)+0.15\cdot\left(\frac{0.125-0.095-0.024}{306}\right)}{0.85\cdot\left(\frac{2.864+0.023}{123}\right)+0.15\cdot\left(\frac{0.095+0.024}{306}\right)} = -0.0047$$

EFFECTIVE DATE NOTE: At 86 FR 34557, June 29, 2021, § 1065.643 was added, effective July 29, 2021.

§ 1065.644 Vacuum-decay leak rate.

This section describes how to calculate the leak rate of a vacuum-decay leak verification, which is described in § 1065.345(e). Use the following equation to calculate the leak rate $\dot{n}_{leak}$, and compare it to the criterion specified in § 1065.345(e):

$$\dot{n}_{leak} = \frac{V_{vac}}{R}\cdot\frac{\left(\frac{p_2}{T_2}-\frac{p_1}{T_1}\right)}{(t_2-t_1)}$$

Eq. 1065.644-1

Where:

V_{vac} = geometric volume of the vacuum-side of the sampling system.
R = molar gas constant.
p_2 = vacuum-side absolute pressure at time t_2.
T_2 = vacuum-side absolute temperature at time t_2.
p_1 = vacuum-side absolute pressure at time t_1.
T_1 = vacuum-side absolute temperature at time t_1.
t_2 = time at completion of vacuum-decay leak verification test.
t_1 = time at start of vacuum-decay leak verification test.

Example:

V_{vac} = 2.0000 L = 0.00200 m^3
R = 8.314472 J/(mol · K) = 8.314472 (m^2 · kg)/(s^2 · mol · K)
p_2 = 50.600 kPa = 50600 Pa = 50600 kg/(m · s^2)
T_2 = 293.15 K
p_1 = 25.300 kPa = 25300 Pa = 25300 kg/(m · s^2)
T_1 = 293.15 K
t_2 = 10:57:35 a.m.
t_1 = 10:56:25 a.m.

$$\dot{n}_{\text{leak}} = \frac{0.0002}{8.314472} \cdot \frac{\left(\frac{50600}{293.15} - \frac{25300}{293.15}\right)}{(10:57:35 - 10:56:25)}$$

$$\dot{n}_{\text{leak}} = \frac{0.00200}{8.314472} \cdot \frac{86.304}{70}$$

$$\dot{n}_{\text{leak}} = 0.00030 \text{ mol/s}$$

[79 FR 23795, Apr. 28, 2014]

§ 1065.645 Amount of water in an ideal gas.

This section describes how to determine the amount of water in an ideal gas, which you need for various performance verifications and emission calculations. Use the equation for the vapor pressure of water in paragraph (a) of this section or another appropriate equation and, depending on whether you measure dewpoint or relative humidity, perform one of the calculations in paragraph (b) or (c) of this section. Paragraph (d) of this section provides an equation for determining dewpoint from relative humidity and dry bulb temperature measurements. The equations for the vapor pressure of water as presented in this section are derived from equations in ''Saturation Pressure of Water on the New Kelvin Temperature Scale'' (Goff, J.A., Transactions American Society of Heating and Air-Conditioning Engineers, Vol. 63, No. 1607, pages 347–354). Note that the equations were originally published to derive vapor pressure in units of atmospheres and have been modified to derive results in units of kPa by converting the last term in each equation.

(a) *Vapor pressure of water*. Calculate the vapor pressure of water for a given saturation temperature condition, T_{sat}, as follows, or use good engineering judgment to use a different relationship of the vapor pressure of water to a given saturation temperature condition:

(1) For humidity measurements made at ambient temperatures from (0 to 100) °C, or for humidity measurements made over super-cooled water at ambient temperatures from (−50 to 0) °C, use the following equation:

$$\log_{10}(p_{H2O}) = 10.79574 \cdot \left(1 - \frac{273.16}{T_{sat}}\right) - 5.02800 \cdot \log_{10}\left(\frac{T_{sat}}{273.16}\right) + 1.50475 \cdot 10^{-4} \cdot \left(1 - 10^{-8.2969 \cdot \left(\frac{T_{sat}}{273.16} - 1\right)}\right)$$
$$+0.42873 \cdot 10^{-3} \cdot \left(10^{4.76955 \cdot \left(1 - \frac{273.16}{T_{sat}}\right)} - 1\right) - 0.2138602$$

Eq. 1065.645-1

Where:

p_{H2O} = vapor pressure of water at saturation temperature condition, kPa.

T_{sat} = saturation temperature of water at measured conditions, K.

Example:

T_{sat} = 9.5 °C = 282.65 K

$$\log_{10}(p_{H2O}) = 10.79574 \cdot \left(1 - \frac{273.16}{282.65}\right) - 5.02800 \cdot \log_{10}\left(\frac{282.65}{273.16}\right) + 1.50475 \cdot 10^{-4} \cdot \left(1 - 10^{-8.2969 \cdot \left(\frac{282.65}{273.16} - 1\right)}\right)$$
$$+0.42873 \cdot 10^{-3} \cdot \left(10^{4.76955 \cdot \left(1 - \frac{273.16}{282.65}\right)} - 1\right) - 0.2138602$$

$\log_{10}(p_{H2O})$ = 0.074297

$p_{H2O} = 10^{0.074297}$ = 1.186581 kPa

(2) For humidity measurements over ice at ambient temperatures from (–100 to 0) °C, use the following equation:

$$\log_{10}(p_{H2O}) = -9.096853 \cdot \left(\frac{273.16}{T_{sat}} - 1\right) - 3.566506 \cdot \log_{10}\left(\frac{273.16}{T_{sat}}\right)$$
$$+0.876812 \cdot \left(1 - \frac{T_{sat}}{273.16}\right) - 0.2138602$$

Eq. 1065.645-2

Example:

$T_{ice} = -15.4\ °C = 257.75\ K$

$$\log_{10}(p_{H2O}) = -9.096853 \cdot \left(\frac{273.16}{257.75} - 1\right) - 3.566506 \cdot \log_{10}\left(\frac{273.16}{257.75}\right)$$
$$+0.876812 \cdot \left(1 - \frac{257.75}{273.16}\right) - 0.2138602$$

$\log_{10}(p_{H20}) = -0.798207$

$p_{H2O} = 10^{-0.79821} = 0.159145\ kPa$

(b) *Dewpoint*. If you measure humidity as a dewpoint, determine the amount of water in an ideal gas, x_{H20}, as follows:

$$x_{H2O} = \frac{p_{H2O}}{p_{abs}} \qquad \text{Eq. 1065.645-3}$$

Where:

x_{H20} = amount of water in an ideal gas.

p_{H20} = water vapor pressure at the measured dewpoint, $T_{sat} = T_{dew}$.

p_{abs} = wet static absolute pressure at the location of your dewpoint measurement.

Example: :

p_{abs} = 99.980 kPa

$T_{sat} = T_{dew}$ = 9.5 °C

Using Eq. 1065.645–1,

p_{H20} = 1.186581 kPa

x_{H2O} = 1.186581/99.980

x_{H2O} = 0.011868 mol/mol

(c) *Relative humidity*. If you measure humidity as a relative humidity, *RH*, determine the amount of water in an ideal gas, x_{H2O}, as follows:

$$x_{H2O} = \frac{RH \cdot p_{H2O}}{p_{abs}}$$

Eq. 1065.645-4

Where:

x_{H2O} = amount of water in an ideal gas.

RH = relative humidity.

p_{H2O} = water vapor pressure at 100% relative humidity at the location of your relative humidity measurement, $T_{sat} = T_{amb}$.

p_{abs} = wet static absolute pressure at the location of your relative humidity measurement.

Example:

RH = 50.77% = 0.5077

p_{abs} = 99.980 kPa

$T_{sat} = T_{amb}$ = 20 °C

Using Eq. 1065.645–1,

p_{H2O} = 2.3371 kPa

x_{H2O} = (0.5077 · 2.3371)/99.980

x_{H2O} = 0.011868 mol/mol

(d) *Dewpoint determination from relative humidity and dry bulb temperature.* This paragraph (d) describes how to calculate dewpoint temperature from relative humidity, *RH*. This is based on ''ITS–90 Formulations for Vapor Pressure, Frostpoint Temperature, Dewpoint Temperature, and Enhancement Factors in the Range −100 to + 100 °C'' (Hardy, B., The Proceedings of the Third International Symposium on Humidity & Moisture, Teddington, London, England, April 1998). Calculate p_{H20sat} as described in paragraph (a) of this section based on setting T_{sat} equal to T_{amb}. Calculate $p_{H20scaled}$ by multiplying p_{H20sat} by *RH*. Calculate the dewpoint, T_{dew}, from p_{H20} using the following equation:

$$T_{dew} = \frac{2.0798233 \cdot 10^{2} - 2.0156028 \cdot 10^{1} \cdot \ln\left(p_{H2O}\right) + 4.6778925 \cdot 10^{-1} \cdot \ln\left(p_{H2O}\right)^{2} - 9.2288067 \cdot 10^{-6} \cdot \ln\left(p_{H2O}\right)^{3}}{1 - 1.3319669 \cdot 10^{-1} \cdot \ln\left(p_{H2O}\right) + 5.6577518 \cdot 10^{-3} \cdot \ln\left(p_{H2O}\right)^{2} - 7.5172865 \cdot 10^{-5} \cdot \ln\left(p_{H2O}\right)^{3}}$$

Eq. 1065.645-5

Where:

$\ln(p_{H2O})$ = the natural log of $p_{H2Oscaled}$, which is the water vapor pressure scaled to the relative humidity at the location of the relative humidity measurement, $T_{sat} = T_{amb}$

Example:

RH = 39.61% = 0.3961

$T_{sat\ =\ Tamb}$ = 20.00 °C = 293.15K

Using Eq. 1065.645–1,

p_{H2Osat} = 2.3371 kPa

$p_{H2Oscaled}$ = (0.3961 · 2.3371) = 0.925717 kPa = 925.717 Pa

$$T_{dew} = \frac{2.0798233 \cdot 10^{2} - 2.0156028 \cdot 10^{1} \cdot \ln\left(925.717\right) + 4.6778925 \cdot 10^{-1} \cdot \ln\left(925.717\right)^{2} - 9.2288067 \cdot 10^{-6} \cdot \ln\left(925.717\right)^{3}}{1 - 1.3319669 \cdot 10^{-1} \cdot \ln\left(925.717\right) + 5.6577518 \cdot 10^{-3} \cdot \ln\left(925.717\right)^{2} - 7.5172865 \cdot 10^{-5} \cdot \ln\left(925.717\right)^{3}}$$

[73 FR 37327, June 30, 2008, as amended at 73 FR 59331, Oct. 8, 2008; 75 FR 23048, Apr. 30, 2010; 76 FR 57456, Sept. 15, 2011;79 FR 23796, Apr. 28, 2014; 81 FR 74179, Oct. 25, 2016]

§ 1065.650 Emission calculations.

(a) *General.* Calculate brake-specific emissions over each applicable duty cycle or test interval. For test intervals with zero work (or power), calculate the emission mass (or mass rate), but do not calculate brake-specific emissions. For duty cycles with multiple test intervals, refer to the standard-setting part for calculations you need to determine a composite result, such as a calculation that weights and sums the results of individual test

intervals in a duty cycle. If the standard-setting part does not include those calculations, use the equations in paragraph (g) of this section. This section is written based on rectangular integration, where each indexed value (*i.e.*, "$_i$") represents (or approximates) the mean value of the parameter for its respective time interval, delta-t. You may also integrate continuous signals using trapezoidal integration consistent with good engineering judgment.

(b) *Brake-specific emissions over a test interval.* We specify three alternative ways to calculate brake-specific emissions over a test interval, as follows:

(1) For any testing, you may calculate the total mass of emissions, as described in paragraph (c) of this section, and divide it by the total work generated over the test interval, as described in paragraph (d) of this section, using the following equation:

$$e = \frac{m}{W} \qquad \text{Eq. 1065.650-1}$$

Example:
m_{NOx} = 64.975 g
W = 25.783 kW · hr
e_{NOx} = 64.975/25.783
e_{NOx} = 2.520 g/(kW · hr)

(2) For discrete-mode steady-state testing, you may calculate the brake-specific emissions over a test interval using the ratio of emission mass rate to power, as described in paragraph (e) of this section, using the following equation:

$$e = \frac{\bar{\dot{m}}}{\bar{P}} \qquad \text{Eq. 1065.650-2}$$

(3) For field testing, you may calculate the ratio of total mass to total work, where these individual values are determined as described in paragraph (f) of this section. You may also use this approach for laboratory testing, consistent with good engineering judgment. Good engineering judgment dictates that this method not be used if there are any work flow paths described in § 1065.210 that cross the system boundary, other than the primary output shaft (crankshaft). This is a special case in which you use a signal linearly proportional to raw exhaust molar flow rate to determine a value proportional to total emissions. You then use the same linearly proportional signal to determine total work using a chemical balance of fuel, intake air, and exhaust as described in § 1065.655, plus information about your engine's brake-specific fuel consumption. Under this method, flow meters need not meet accuracy specifications, but they must meet the applicable linearity and repeatability specifications in subpart D or subpart J of this part. The result is a brake-specific emission value calculated as follows:

$$e = \frac{\tilde{m}}{\tilde{W}} \qquad \text{Eq. 1065.650-3}$$

Example:

$\tilde{m}$ = 805.5 g

$\tilde{W}$ = 52.102 kW · hr
e_{CO} = 805.5/52.102
e_{CO} = 2.520 g/(kW · hr)

(c) *Total mass of emissions over a test interval.* To calculate the total mass of an emission, multiply a concentration by its respective flow. For all systems, make preliminary calculations as described in paragraph (c)(1) of this section to correct concentrations. Next, use the method in paragraphs (c)(2) through (4) of this section that is appropriate for your system. Finally, if necessary, calculate the mass of NMHC as described in paragraph (c)(5) of this section for all systems. Calculate the total mass of emissions as follows:

(1) *Concentration corrections.* Perform the following sequence of preliminary calculations on recorded concentrations:

(i) Correct all gaseous emission analyzer concentration readings, including continuous readings, sample bag readings, and dilution air background readings, for drift as described in §1065.672. Note that you must omit this step where brake-specific emissions are calculated without the drift correction for performing the drift validation according to §1065.550(b). When applying the initial THC and CH_4 contamination readings according to §1065.520(f), use the same values for both sets of calculations. You may also use as-measured values in the initial set of calculations and corrected values in the drift-corrected set of calculations as described in §1065.520(f)(7).

(ii) Correct all THC and CH_4 concentrations for initial contamination as described in §1065.660(a), including continuous readings, sample bags readings, and dilution air background readings.

(iii) Correct all concentrations measured on a ''dry'' basis to a ''wet'' basis, including dilution air background concentrations, as described in §1065.659.

(iv) Calculate all NMHC and CH_4 concentrations, including dilution air background concentrations, as described in §1065.660.

(v) For emission testing with an oxygenated fuel, calculate any HC concentrations, including dilution air background concentrations, as described in §1065.665. See subpart I of this part for testing with oxygenated fuels.

(vi) Correct all the NO_X concentrations, including dilution air background concentrations, for intake-air humidity as described in §1065.670.

(2) *Continuous sampling.* For continuous sampling, you must frequently record a continuously updated concentration signal. You may measure this concentration from a changing flow rate or a constant flow rate (including discrete-mode steady-state testing), as follows:

(i) *Varying flow rate.* If you continuously sample from a changing exhaust flow rate, time align and then multiply concentration measurements by the flow rate from which you extracted it. Use good engineering judgment to time align flow and concentration data to match transformation time, t_{50}, to within ±1 s. We consider the following to be examples of changing flows that require a continuous multiplication of concentration times molar flow rate: Raw exhaust, exhaust diluted with a constant flow rate of dilution air, and CVS dilution with a CVS flowmeter that does not have an upstream heat exchanger or electronic flow control. This multiplication results in the flow rate of the emission itself. Integrate the emission flow rate over a test interval to determine the total emission. If the total emission is a molar quantity, convert this quantity to a mass by multiplying it by its molar mass, M. The result is the mass of the emission, m. Calculate m for continuous sampling with variable flow using the following equations:

$$m = M \cdot \sum_{i=1}^{N} x_i \cdot \dot{n}_i \cdot \Delta t \qquad \text{Eq. 1065.650-4}$$

Where:

$$\Delta t = 1/f_{\text{record}} \qquad \text{Eq. 1065.650-5}$$

Example:
M_{NMHC} = 13.875389 g/mol
N = 1200
x_{NMHC1} = 84.5 μmol/mol = 84.5 · 10^{-6} mol/mol
x_{NMHC2} = 86.0 μmol/mol = 86.0 · 10^{-6} mol/mol
$\dot{n}_{\text{exh1}}$ = 2.876 mol/s
$\dot{n}_{\text{exh2}}$ = 2.224 mol/s
f_{record} = 1 Hz
Using Eq. 1065.650–5,
Δt = 1/1 = 1 s
m_{NMHC} = 13.875389 · (84.5 · 10^{-6} · 2.876 + 86.0 · 10^{-6} · 2.224 + … + $x_{\text{NMHC1200}} \cdot \dot{n}_{\text{exh}}$) · 1
m_{NMHC} = 25.53 g

(ii) *Constant flow rate.* If you continuously sample from a constant exhaust flow rate, use the same emission calculations described in paragraph (c)(2)(i) of this section or calculate the mean or flow-weighted concentration recorded over the test interval and treat the mean as a batch sample, as described in paragraph (c)(3)(ii) of this section. We consider the following to be examples of constant exhaust flows: CVS diluted exhaust with a CVS flowmeter that has either an upstream heat exchanger, electronic flow control, or both.

(3) *Batch sampling.* For batch sampling, the concentration is a single value from a proportionally extracted batch sample (such as a bag, filter, impinger, or cartridge). In this case, multiply the mean concentration of the batch sample by the total flow from which the sample was extracted. You may calculate total flow by integrating a changing flow rate or by determining the mean of a constant flow rate, as follows:

(i) *Varying flow rate.* If you collect a batch sample from a changing exhaust flow rate, extract a sample proportional to the changing exhaust flow rate. We consider the following to be examples of changing flows that require proportional sampling: Raw exhaust, exhaust diluted with a constant flow rate of dilution air, and CVS dilution with a CVS flowmeter that does not have an upstream heat exchanger or electronic flow control. Integrate the flow rate over a test interval to determine the total flow from which you extracted the proportional sample. Multiply the mean concentration of the batch sample by the total flow from which the sample was extracted. If the total emission is a molar quantity, convert this quantity to a mass by multiplying it by its molar mass, M. The result is the mass of the emission, m. In the case of PM emissions, where the mean PM concentration is already in units of mass per mole of sample, $\bar{M}_{\text{PM}}$, simply multiply it by the total flow. The result is the total mass of PM, m_{PM}. Calculate m for batch sampling with variable flow using the following equation:

$$m = M \cdot \bar{x} \cdot \sum_{i=1}^{N} \dot{n}_{\text{i}} \cdot \Delta t \qquad \text{Eq. 1065.650-6}$$

Example:
M_{NOx} = 46.0055 g/mol
N = 9000
$\bar{x}_{\text{NOx}}$ = 85.6 μmol/mol = 85.6 · 10^{-6} mol/mol
$\dot{n}_{\text{dexh1}}$ = 25.534 mol/s
$\dot{n}_{\text{dexh2}}$ = 26.950 mol/s
f_{record} = 5 Hz
Using Eq. 1065.650–5,
Δt = 1/5 = 0.2
m_{NOx} = 46.0055 · 85.6 · 10^{-6} · (25.534 + 26.950 + … + $\dot{n}_{\text{exh9000}}$) · 0.2
m_{NOx} = 4.201 g

(ii) *Constant flow rate.* If you batch sample from a constant exhaust flow rate, extract a sample at a proportional or constant flow rate. We consider the following to be examples of constant exhaust flows: CVS diluted exhaust with a CVS flow meter that has either an upstream heat exchanger, electronic flow control, or both. Determine the mean molar flow rate from which you extracted the constant flow rate sample. Multiply the mean concentration of the batch sample by the mean molar flow rate of the exhaust from which the sample was extracted, and multiply the result by the time of the test interval. If the total emission is a molar quantity, convert this quantity to a mass by multiplying it by its molar mass, M. The result is the mass of the emission, m. In the case of PM emissions, where the mean PM concentration is already in units of mass

per mole of sample, $\bar{M}_{PM}$, simply multiply it by the total flow, and the result is the total mass of PM, m_{PM}. Calculate m for sampling with constant flow using the following equations:

$$m = M \cdot \bar{x} \cdot \bar{\dot{n}} \cdot \Delta t \qquad \text{Eq. 1065.650-7}$$

and for PM or any other analysis of a batch sample that yields a mass per mole of sample,

$$\bar{M} = M \cdot \bar{x} \qquad \text{Eq. 1065.650-8}$$

Example:

$\bar{M}_{PM}$ = 144.0 μg/mol = 144.0 · 10^{-6} g/mol
$\bar{\dot{n}}_{dexh}$ = 57.692 mol/s
Δt = 1200 s
m_{PM} = 144.0 · 10^{-6} · 57.692 · 1200
m_{PM} = 9.9692 g

(4) *Additional provisions for diluted exhaust sampling; continuous or batch.* The following additional provisions apply for sampling emissions from diluted exhaust:

(i) For sampling with a constant dilution ratio, *DR*, of diluted exhaust versus exhaust flow (*e.g.*, secondary dilution for PM sampling), calculate m using the following equation:

$$m_{PM} = m_{PMdil} \cdot DR \qquad \text{Eq. 1065.650-9}$$

Example:
m_{PMdil} = 6.853 g
DR = 6:1
m_{PM} = 6.853 · 6
m_{PM} = 41.118 g

(ii) For continuous or batch sampling, you may measure background emissions in the dilution air. You may then subtract the measured background emissions, as described in §1065.667.

(5) *Mass of NMHC.* Compare the corrected mass of NMHC to corrected mass of THC. If the corrected mass of NMHC is greater than 0.98 times the corrected mass of THC, take the corrected mass of NMHC to be 0.98 times the corrected mass of THC. If you omit the NMHC calculations as described in §1065.660(b)(1), take the corrected mass of NMHC to be 0.98 times the corrected mass of THC.

(6) *Mass of NMNEHC.* If the test fuel has less than 0.010 mol/mol of ethane and you omit the NMNEHC calculations as described in §1065.660(c)(1), take the corrected mass of NMNEHC to be 0.95 times the corrected mass of NMHC.

(d) *Total work over a test interval.* To calculate the total work from the engine over a test interval, add the total work from all the work paths described in §1065.210 that cross the system boundary including electrical energy/work, mechanical shaft work, and fluid pumping work. For all work paths, except the engine's primary output shaft (crankshaft), the total work for the path over the test interval is the integration of the net work flow rate (power) out of the system boundary. When energy/work flows into the system boundary, this work flow rate signal becomes negative; in this case, include these negative work rate values in the integration to calculate total work from that work path. Some work paths may result in a negative total work. Include negative total work values from any work path in the calculated total work from the engine rather than setting the values to zero. The rest of this paragraph (d) describes how to calculate total work from the engine's primary output shaft over a test interval. Before integrating power on the engine's primary output shaft, adjust the speed and torque data for the time alignment used in §1065.514(c). Any advance or delay used on the feedback signals for cycle validation must also be used for calculating work. Account for work of accessories according to §1065.110. Exclude any work during cranking and starting. Exclude work during actual motoring operation (negative feedback torques), unless the engine was connected to one or more energy storage devices. Examples of such

energy storage devices include hybrid powertrain batteries and hydraulic accumulators, like the ones illustrated in Figure 1 of § 1065.210. Exclude any work during reference zero-load idle periods (0% speed or idle speed with 0 N · m reference torque). Note, that there must be two consecutive reference zero load idle points to establish a period where this applies. Include work during idle points with simulated minimum torque such as Curb Idle Transmissions Torque (CITT) for automatic transmissions in ''drive''. The work calculation method described in paragraphs (b)(1) through (7) of this section meets these requirements using rectangular integration. You may use other logic that gives equivalent results. For example, you may use a trapezoidal integration method as described in paragraph (b)(8) of this section.

(1) Time align the recorded feedback speed and torque values by the amount used in § 1065.514(c).

(2) Calculate shaft power at each point during the test interval by multiplying all the recorded feedback engine speeds by their respective feedback torques.

(3) Adjust (reduce) the shaft power values for accessories according to § 1065.110.

(4) Set all power values during any cranking or starting period to zero. See § 1065.525 for more information about engine cranking.

(5) Set all negative power values to zero, unless the engine was connected to one or more energy storage devices. If the engine was tested with an energy storage device, leave negative power values unaltered.

(6) Set all power values to zero during idle periods with a corresponding reference torque of 0 N · m.

(7) Integrate the resulting values for power over the test interval. Calculate total work as follows:

$$W = \sum_{i=1}^{N} P_i \cdot \Delta t$$

Eq. 1065.650-10

Where:

W = total work from the primary output shaft.

P_i = instantaneous power from the primary output shaft over an interval i.

$$P_i = f_{ni} \cdot T_i$$

Eq. 1065.650-11

Where:

N = 9000

f_{n1} = 1800.2 r/min

f_{n2} = 1805.8 r/min

T_1 = 177.23 N · m

T_2 = 175.00 N · m

C_{rev} = 2 · π rad/r

C_{t1} = 60 s/min

C_p = 1000 (N · m · rad/s)/kW

f_{record} = 5 Hz

C_{t2} = 3600 s/hr

$$P_1 = \frac{1800.2 \cdot 177.23 \cdot 2 \cdot 3.14159}{60 \cdot 1000}$$

P_1 = 33.41 kW
P_2 = 33.09 kW
Δt = 1/5 = 0.2 s
Using Eq. 1065.650–5,

$$W = \frac{(33.41 + 33.09 + ... + P_{9000}) \cdot 0.2}{3600}$$

W = 16.875 kW · hr

(8) You may use a trapezoidal integration method instead of the rectangular integration described in this paragraph (d). To do this, you must integrate the fraction of work between points where the torque is positive. You may assume that speed and torque are linear between data points. You may not set negative values to zero before running the integration.

(e) *Steady-state mass rate divided by power.* To determine steady-state brake-specific emissions for a test interval as described in paragraph (b)(2) of this section, calculate the mean steady-state mass rate of the emission, $\overline{\dot{m}}$, and the mean steady-state power, $\bar{P}$ as follows:

(1) To calculate $\overline{\dot{m}}$, multiply its mean concentration, $\bar{x}$, by its corresponding mean molar flow rate, $\overline{\dot{n}}$. If the result is a molar flow rate, convert this quantity to a mass rate by multiplying it by its molar mass, M. The result is the mean mass rate of the emission, $\overline{\dot{m}}$. In the case of PM emissions, where the mean PM concentration is already in units of mass per mole of sample, $\bar{M}_{PM}$, simply multiply it by the mean molar flow rate, $\overline{\dot{n}}$. The result is the mass rate of PM, $\dot{m}_{PM}$. Calculate $\overline{\dot{m}}$ using the following equation:

$$\overline{\dot{m}} = M \cdot \bar{x} \cdot \overline{\dot{n}} \qquad \text{Eq. 1065.650-12}$$

(2) To calculate an engine's mean steady-state total power, $\bar{P}$, add the mean steady-state power from all the work paths described in §1065.210 that cross the system boundary including electrical power, mechanical shaft power, and fluid pumping power. For all work paths, except the engine's primary output shaft (crankshaft), the mean steady-state power over the test interval is the integration of the net work flow rate (power) out of the system boundary divided by the period of the test interval. When power flows into the system boundary, the power/work flow rate signal becomes negative; in this case, include these negative power/work rate values in the integration to calculate the mean power from that work path. Some work paths may result in a negative mean power. Include negative mean power values from any work path in the mean total power from the engine rather than setting these values to zero. The rest of this paragraph (e)(2) describes how to calculate the mean power from the engine's primary output shaft. Calculate $\bar{P}$ using Eq. 1065.650–13, noting that $\bar{P}$, $\bar{f}_n$, and $\bar{T}$ refer to mean power, mean rotational shaft frequency, and mean torque from the primary output shaft. Account for the power of simulated accessories according to §1065.110 (reducing the mean primary output shaft power or torque by the accessory power or torque). Set the power to zero during actual motoring operation (negative feedback torques), unless the engine was connected to one or more energy storage devices. Examples of such energy storage devices include hybrid powertrain batteries and hydraulic accumulators, like the ones illustrated in Figure 1 of §1065.210. Set the power to zero for modes with a zero reference load (0 N·m reference torque or 0 kW reference power). Include power during idle modes with simulated minimum torque or power.

$$\overline{P} = \overline{f}_{\mathrm{n}} \cdot \overline{T}$$

Eq. 1065.650-13

(3) Divide emission mass rate by power to calculate a brake-specific emission result as described in paragraph (b)(2) of this section.

(4) The following example shows how to calculate mass of emissions using mean mass rate and mean power:

M_{CO} = 28.0101 g/mol
$\overline{\tilde{x}}_{CO}$ = 12.00 mmol/mol = 0.01200 mol/mol
$\overline{\tilde{n}}$ = 1.530 mol/s
$\overline{f}_n$ = 3584.5 r/min = 375.37 rad/s
$\overline{T}$ = 121.50 N · m
$\overline{\tilde{m}}$ = 28.0101 · 0.01200 · 1.530
$\overline{\tilde{m}}$ = 0.514 g/s = 1850.4 g/hr
$\overline{P}$ = 121.5 · 375.37
$\overline{P}$ = 45607 W
$\overline{P}$ = 45.607 kW
e_{CO} = 1850.4/45.61
e_{CO} = 40.57 g/(kW · hr)

(f) *Ratio of total mass of emissions to total work.* To determine brake-specific emissions for a test interval as described in paragraph (b)(3) of this section, calculate a value proportional to the total mass of each emission. Divide each proportional value by a value that is similarly proportional to total work.

(1) *Total mass.* To determine a value proportional to the total mass of an emission, determine total mass as described in paragraph (c) of this section, except substitute for the molar flow rate, $\dot{n}$, or the total flow, n, with a signal that is linearly proportional to molar flow rate, $\tilde{\dot{n}}$, or linearly proportional to total flow, $\tilde{n}$ as follows:

$$\tilde{\dot{m}}_{\mathrm{fueli}} = \frac{1}{w_{\mathrm{fuel}}} \cdot \frac{M_{\mathrm{C}} \cdot \tilde{\dot{n}}_{\mathrm{i}} \cdot x_{\mathrm{Ccombdryi}}}{1 + x_{\mathrm{H2Oexhdryi}}} \qquad \text{Eq. 1065.650-14}$$

(2) *Total work.* To calculate a value proportional to total work over a test interval, integrate a value that is proportional to power. Use information about the brake-specific fuel consumption of your engine, e_{fuel}, to convert a signal proportional to fuel flow rate to a signal proportional to power. To determine a signal proportional to fuel flow rate, divide a signal that is proportional to the mass rate of carbon products by the fraction of carbon in your fuel, w_{C}. You may use a measured w_{C} or you may use default values for a given fuel as described in §1065.655(e). Calculate the mass rate of carbon from the amount of carbon and water in the exhaust, which you determine with a chemical balance of fuel, intake air, and exhaust as described in §1065.655. In the chemical balance, you must use concentrations from the flow that generated the signal proportional to molar flow rate, $\tilde{\dot{n}}$, in paragraph (e)(1) of this section. Calculate a value proportional to total work as follows:

$$W = \sum_{i=1}^{N} \tilde{P}_i \cdot \Delta t$$

Eq. 1065.650-15

Where:

$$\tilde{P}_{\mathrm{i}} = \frac{\tilde{\dot{m}}_{\mathrm{fueli}}}{e_{\mathrm{fuel}}}$$

Eq. 1065.650-16

(3) *Brake-specific emissions*. Divide the value proportional to total mass by the value proportional to total work to determine brake-specific emissions, as described in paragraph (b)(3) of this section.

(4) Example: The following example shows how to calculate mass of emissions using proportional values:

N = 3000
f_{record} = 5 Hz
e_{fuel} = 285 g/(kW·hr)
w_{fuel} = 0.869 g/g
M_{C} = 12.0107 g/mol
$\tilde{\dot{n}}_1$ = 3.922 mol/s = 14119.2 mol/hr
$x_{\mathrm{Ccombdry1}}$ = 91.634 mmol/mol = 0.091634 mol/mol
x_{H2Oexh1} = 27.21 mmol/mol = 0.02721 mol/mol
Using Eq. 1065.650–5,
Δt = 0.2 s

$$\tilde{W} = \frac{12.0107\left(\frac{3.922 \cdot 0.091634}{1+0.02721} + \frac{\tilde{\dot{n}}_2 \cdot x_{\mathrm{Ccombdry2}}}{1+x_{\mathrm{H2Oexh2}}} + \ldots + \frac{\tilde{\dot{n}}_{3000} \cdot x_{\mathrm{Ccombdry3000}}}{1+x_{\mathrm{H2Oexh3000}}}\right) \cdot 0.2}{285 \cdot 0.869}$$

$\tilde{W}$ = 5.09 (kW·hr)

(g) *Brake-specific emissions over a duty cycle with multiple test intervals*. The standard-setting part may specify a duty cycle with multiple test intervals, such as with discrete-mode steady-state testing. Unless we specify otherwise, calculate composite brake-specific emissions over the duty cycle as described in this paragraph (g). If a measured mass (or mass rate) is negative, set it to zero for calculating composite brake-specific emissions, but leave it unchanged for drift validation. In the case of calculating composite brake-specific emissions relative to a combined emission standard (such as a NO_X + NMHC standard), change any negative mass (or mass rate) values to zero for a particular pollutant before combining the values for the different pollutants.

(1) Use the following equation to calculate composite brake-specific emissions for duty cycles with multiple test intervals all with prescribed durations, such as cold-start and hot-start transient cycles:

$$e_{\mathrm{composite}} = \frac{\sum_{i=1}^{N} WF_i \cdot m_i}{\sum_{i=1}^{N} WF_i \cdot W_i} \qquad \text{Eq. 1065.650-17}$$

Where:

i = test interval number.
N = number of test intervals.
WF = weighting factor for the test interval as defined in the standard-setting part.
m = mass of emissions over the test interval as determined in paragraph (c) of this section.
W = total work from the engine over the test interval as determined in paragraph (d) of this section.

Example:
$N = 2$
$WF_1 = 0.1428$
$WF_2 = 0.8572$
$m_1 = 70.125$ g
$m_2 = 64.975$ g
$W_1 = 25.783$ kW · hr
$W_2 = 25.783$ kW · hr

$$e_{\mathrm{NO}_x\mathrm{composite}} = \frac{(0.1428 \cdot 70.125) + (0.8572 \cdot 64.975)}{(0.1428 \cdot 25.783) + (0.8572 \cdot 25.783)}$$

$e_{\mathrm{NOxcomposite}} = 2.548$ g/kW · hr

(2) Calculate composite brake-specific emissions for duty cycles with multiple test intervals that allow use of varying duration, such as discrete-mode steady-state duty cycles, as follows:

(i) Use the following equation if you calculate brake-specific emissions over test intervals based on total mass and total work as described in paragraph (b)(1) of this section:

$$e_{\mathrm{composite}} = \frac{\sum_{i=1}^{N} WF_i \cdot \frac{m_i}{t_i}}{\sum_{i=1}^{N} WF_i \cdot \frac{W_i}{t_i}} \qquad \text{Eq. 1065.650-18}$$

Where:

i = test interval number.
N = number of test intervals.
WF = weighting factor for the test interval as defined in the standard-setting part.
m = mass of emissions over the test interval as determined in paragraph (c) of this section.
W = total work from the engine over the test interval as determined in paragraph (d) of this section.
t = duration of the test interval.

Example:
$N = 2$
$WF_1 = 0.85$
$WF_2 = 0.15$
$m_1 = 1.3753$ g
$m_2 = 0.4135$ g
$t_1 = 120$ s
$t_2 = 200$ s
$W_1 = 2.8375$ kW · hr
$W_2 = 0.0$ kW · hr

$$e_{\mathrm{NO}_x\mathrm{composite}} = \frac{\left(0.85 \cdot \frac{1.3753}{120}\right) + \left(0.15 \cdot \frac{0.4135}{200}\right)}{\left(0.85 \cdot \frac{2.8375}{120}\right) + \left(0.15 \cdot \frac{0.0}{200}\right)}$$

$e_{\mathrm{NOxcomposite}} = 0.5001$ g/kW · hr

(ii) Use the following equation if you calculate brake-specific emissions over test intervals based on the ratio of mass rate to power as described in paragraph (b)(2) of this section:

$$e_{\text{composite}} = \frac{\sum_{i=1}^{N} WF_i \cdot \overline{\dot{m}}_i}{\sum_{i=1}^{N} WF_i \cdot \overline{P}_i}$$

Eq. 1065.650-19

Where:

i = test interval number.

N = number of test intervals.

WF = weighting factor for the test interval as defined in the standard-setting part.

$\overline{\dot{m}}$ = mean steady-state mass rate of emissions over the test interval as determined in paragraph (e) of this section.

$\bar{P}$ = mean steady-state power over the test interval as described in paragraph (e) of this section.

Example:

$N = 2$

$WF_1 = 0.85$

$WF_2 = 0.15$

$\overline{\dot{m}}_1 = 2.25842$ g/hr

$\overline{\dot{m}}_2 = 0.063443$ g/hr

$\bar{P}_1 = 4.5383$ kW

$\bar{P}_2 = 0.0$ kW

$$e_{\text{NO}_x\text{composite}} = \frac{(0.85 \cdot 2.25842) + (0.15 \cdot 0.063443)}{(0.85 \cdot 4.5383) + (0.15 \cdot 0.0)}$$

$e_{\text{NOxcomposite}} = 0.5001$ g/kW·hr

(h) *Rounding*. Round the final brake-specific emission values to be compared to the applicable standard only after all calculations are complete (including any drift correction, applicable deterioration factors, adjustment factors, and allowances) and the result is in g/(kW · hr) or units equivalent to the units of the standard, such as g/(hp · hr). *See* the definition of ''Round'' in § 1065.1001.

[73 FR 37328, June 30, 2008, as amended at 73 FR 59332, Oct. 8, 2008; 75 FR 23048, Apr. 30, 2010; 76 FR 57457, Sept. 15, 2011;79 FR 23799, Apr. 28, 2014; 80 FR 9118, Feb. 19, 2015; 81 FR 74180, Oct. 25, 2016]

EFFECTIVE DATE NOTE: At 86 FR 34560, June 29, 2021, § 1065.650 was amended, effective July 29, 2021.

§ 1065.655 Chemical balances of fuel, intake air, and exhaust.

(a) *General*. Chemical balances of fuel, intake air, and exhaust may be used to calculate flows, the amount of water in their flows, and the wet concentration of constituents in their flows. With one flow rate of either fuel, intake air, or exhaust, you may use chemical balances to determine the flows of the other two. For example, you may use chemical balances along with either intake air or fuel flow to determine raw exhaust flow. Note that chemical balance calculations require measured values for the flow rate of diesel exhaust fluid, if applicable.

(b) *Procedures that require chemical balances*. We require chemical balances when you determine the following:

(1) A value proportional to total work, $\tilde{W}$, when you choose to determine brake-specific emissions as described in § 1065.650(f).

(2) Raw exhaust molar flow rate either from measured intake air molar flow rate or from fuel mass flow rate as described in paragraph (f) of this section.

(3) Raw exhaust molar flow rate from measured intake air molar flow rate and dilute exhaust molar flow rate, as described in paragraph (g) of this section.

(4) The amount of water in a raw or diluted exhaust flow, χ_{H2Oexh}, when you do not measure the amount of water to correct for the amount of water removed by a sampling system. Correct for removed water according to § 1065.659.

(5) The calculated total dilution air flow when you do not measure dilution air flow to correct for background emissions as described in § 1065.667(c) and (d).

(c) *Chemical balance procedure.* The calculations for a chemical balance involve a system of equations that require iteration. We recommend using a computer to solve this system of equations. You must guess the initial values of up to three quantities: The amount of water in the measured flow, χ_{H2Oexh}, fraction of dilution air in diluted exhaust, $\chi_{dil/exh}$, and the amount of products on a C_1 basis per dry mole of dry measured flow, $\chi_{Ccombdry}$. You may use time-weighted mean values of combustion air humidity and dilution air humidity in the chemical balance; as long as your combustion air and dilution air humidities remain within tolerances of ±0.0025 mol/mol of their respective mean values over the test interval. For each emission concentration, χ, and amount of water, χ_{H2Oexh}, you must determine their completely dry concentrations, χ_{dry} and $\chi_{H2Oexhdry}$. You must also use your fuel mixture's atomic hydrogen-to-carbon ratio, α, oxygen-to-carbon ratio, β, sulfur-to-carbon ratio, γ, and nitrogen-to-carbon ratio, δ, you may optionally account for diesel exhaust fluid (or other fluids injected into the exhaust), if applicable. You may calculate α, β, γ, and δ; based on measured fuel and diesel exhaust fluid composition or you may use default values as described in paragraph (e) of this section. Use the following steps to complete a chemical balance:

(1) Convert your measured concentrations such as, $x_{CO2meas}$, x_{NOmeas}, and x_{H2Oint}, to dry concentrations by dividing them by one minus the amount of water present during their respective measurements; for example: $x_{H2OxCO2meas}$, $x_{H2OxNOmeas}$, and x_{H2Oint}. If the amount of water present during a ''wet'' measurement is the same as the unknown amount of water in the exhaust flow, x_{H2Oexh}, iteratively solve for that value in the system of equations. If you measure only total NO_X and not NO and NO_2 separately, use good engineering judgment to estimate a split in your total NO_X concentration between NO and NO_2 for the chemical balances. For example, if you measure emissions from a stoichiometric spark-ignition engine, you may assume all NO_X is NO. For a compression-ignition engine, you may assume that your molar concentration of NO_X, x_{NOx}, is 75% NO and 25% NO_2. For NO_2 storage aftertreatment systems, you may assume x_{NOx} is 25% NO and 75% NO_2. Note that for calculating the mass of NO_X emissions, you must use the molar mass of NO_2 for the effective molar mass of all NO_X species, regardless of the actual NO_2 fraction of NO_X.

(2) Enter the equations in paragraph (c)(4) of this section into a computer program to iteratively solve for x_{H2Oexh}, $x_{Ccombdry}$, and $x_{dil/exh}$. Use good engineering judgment to guess initial values for x_{H2Oexh}, $x_{Ccombdry}$, and $x_{dil/exh}$. We recommend guessing an initial amount of water that is about twice the amount of water in your intake or dilution air. We recommend guessing an initial value of $x_{Ccombdry}$ as the sum of your measured CO_2, CO, and THC values. We also recommend guessing an initial $x_{dil/exh}$ between 0.75 and 0.95, such as 0.8. Iterate values in the system of equations until the most recently updated guesses are all within ±1% of their respective most recently calculated values.

(3) Use the following symbols and subscripts in the equations for performing the chemical balance calculations in this paragraph (c):

$x_{dil/exh}$ = amount of dilution gas or excess air per mole of exhaust.

x_{H2Oexh} = amount of H_2O in exhaust per mole of exhaust.

$x_{Ccombdry}$ = amount of carbon from fuel in the exhaust per mole of dry exhaust.

x_{H2dry} = amount of H_2 in exhaust per amount of dry exhaust.

K_{H2Ogas} = water-gas reaction equilibrium coefficient. You may use 3.5 or calculate your own value using good engineering judgment.

$x_{H2Oexhdry}$ = amount of H_2O in exhaust per dry mole of dry exhaust.

$x_{prod/intdry}$ = amount of dry stoichiometric products per dry mole of intake air.

$x_{dil/exhdry}$ = amount of dilution gas and/or excess air per mole of dry exhaust.

$x_{int/exhdry}$ = amount of intake air required to produce actual combustion products per mole of dry (raw or diluted) exhaust.

$x_{raw/exhdry}$ = amount of undiluted exhaust, without excess air, per mole of dry (raw or diluted) exhaust.

x_{O2int} = amount of intake air O_2 per mole of intake air.

$x_{CO2intdry}$ = amount of intake air CO_2 per mole of dry intake air. You may use $\chi_{CO2intdry}$ = 375 μmol/mol, but we recommend measuring the actual concentration in the intake air.

$x_{H2Ointdry}$ = amount of intake air H_2O per mole of dry intake air.

x_{CO2int} = amount of intake air CO_2 per mole of intake air.

x_{CO2dil} = amount of dilution gas CO_2 per mole of dilution gas.

$x_{CO2dildry}$ = amount of dilution gas CO_2 per mole of dry dilution gas. If you use air as diluent, you may use $\chi_{CO2dildry}$ = 375 μmol/mol, but we recommend measuring the actual concentration in the intake air.

$x_{H2Odildry}$ = amount of dilution gas H_2O per mole of dry dilution gas.

x_{H2Odil} = amount of dilution gas H_2O per mole of dilution gas.

$x_{[emission]meas}$ = amount of measured emission in the sample at the respective gas analyzer.

$x_{[emission]dry}$ = amount of emission per dry mole of dry sample.

$x_{H2O[emission]meas}$ = amount of H_2O in sample at emission-detection location. Measure or estimate these values according to §1065.145(e)(2).

x_{H2Oint} = amount of H_2O in the intake air, based on a humidity measurement of intake air.

α = atomic hydrogen-to-carbon ratio of the fuel (or mixture of test fuels) and any injected fluids.

β = atomic oxygen-to-carbon ratio of the fuel (or mixture of test fuels) and any injected fluids.

γ = atomic sulfur-to-carbon ratio of the fuel (or mixture of test fuels) and any injected fluids.

δ = atomic nitrogen-to-carbon ratio of the fuel (or mixture of test fuels) and any injected fluids.

(4) Use the following equations to iteratively solve for $x_{dil/exh}$, x_{H2Oexh}, and $x_{Ccombdry}$:

$$x_{dil/exh} = 1 - \frac{x_{raw/exhdry}}{1 + x_{H2Oexhdry}} \quad \text{Eq. 1065.655-1}$$

$$x_{H2Oexh} = \frac{x_{H2Oexhdry}}{1 + x_{H2Oexhdry}} \quad \text{Eq. 1065.655-2}$$

$$x_{Ccombdry} = x_{CO2dry} + x_{COdry} + x_{THCdry} - x_{CO2dil} \cdot x_{dil/exhdry} - x_{CO2int} \cdot x_{int/exhdry} \quad \text{Eq. 1065.655-3}$$

$$x_{H2dry} = \frac{x_{COdry} \cdot \left(x_{H2Oexhdry} - x_{H2Odil} \cdot x_{dil/exhdry}\right)}{K_{H2O\text{-}gas} \cdot \left(x_{CO2dry} - x_{CO2dil} \cdot x_{dil/exhdry}\right)} \quad \text{Eq. 1065.655-4}$$

$$x_{H2Oexhdry} = \frac{\alpha}{2}\left(x_{Ccombdry} - x_{THCdry}\right) + x_{H2Odil} \cdot x_{dil/exhdry} + x_{H2Oint} \cdot x_{int/exhdry} - x_{H2dry} \quad \text{Eq. 1065.655-5}$$

$$x_{dil/exhdry} = \frac{x_{dil/exh}}{1 - x_{H2Oexh}} \quad \text{Eq. 1065.655-6}$$

$$x_{int/exhdry} = \frac{1}{2 \cdot x_{O2int}}\left(\left(\frac{\alpha}{2} - \beta + 2 + 2\gamma\right)\left(x_{Ccombdry} - x_{THCdry}\right) - \left(x_{COdry} - x_{NOdry} - 2x_{NO2dry} + x_{H2dry}\right)\right) \quad \text{Eq. 1065.655-7}$$

$$x_{raw/exhdry} = \frac{1}{2}\left(\left(\frac{\alpha}{2} + \beta + \delta\right)\left(x_{Ccombdry} - x_{THCdry}\right) + \left(2x_{THCdry} + x_{COdry} - x_{NO2dry} + x_{H2dry}\right)\right) + x_{int/exhdry} \quad \text{Eq. 1065.655-8}$$

$$x_{O2int} = \frac{0.209820 - x_{CO2intdry}}{1 + x_{H2Ointdry}} \quad \text{Eq. 1065.655-9}$$

$$x_{CO2int} = \frac{x_{CO2intdry}}{1 + x_{H2Ointdry}} \quad \text{Eq. 1065.655-10}$$

$$x_{H2Ointdry} = \frac{x_{H2Oint}}{1 - x_{H2Oint}} \quad \text{Eq. 1065.655-11}$$

$$x_{CO2dil} = \frac{x_{CO2dildry}}{1 + x_{H2Odildry}} \quad \text{Eq. 1065.655-12}$$

$$x_{H2Odildry} = \frac{x_{H2Odil}}{1 - x_{H2Odil}} \quad \text{Eq. 1065.655-13}$$

$$x_{COdry} = \frac{x_{COmeas}}{1 - x_{H2OCOmeas}} \quad \text{Eq. 1065.655-14}$$

$$x_{CO2dry} = \frac{x_{CO2meas}}{1 - x_{H2OCO2meas}} \quad \text{Eq. 1065.655-15}$$

$$x_{NOdry} = \frac{x_{NOmeas}}{1 - x_{H2ONOmeas}} \quad \text{Eq. 1065.655-16}$$

$$x_{NO2dry} = \frac{x_{NO2meas}}{1 - x_{H2ONO2meas}} \quad \text{Eq. 1065.655-17}$$

$$x_{THCdry} = \frac{x_{THCmeas}}{1 - x_{H2OTHCmeas}} \quad \text{Eq. 1065.655-18}$$

(5) The following example is a solution for $x_{dil/exh,x}$, x_{H2Oexh}, and $x_{Ccombdry}$ using the equations in paragraph (c)(4) of this section:

$$x_{dil/exh} = 1 - \frac{0.184}{1 + \frac{35.37}{1000}} = 0.822\, mol/mol$$

$$x_{\mathrm{H2Oexh}} = \frac{35.37}{1+\frac{35.37}{1000}} = 34.16\,mmol/mol$$

$$x_{\mathrm{Ccombdry}} = 0.0252 + \frac{29.3}{1000000} + \frac{47.6}{1000000} - \frac{0.371}{1000}\cdot 0.851 - \frac{0.369}{1000}\cdot 0.172 = 0.0249\,mol/mol$$

$$x_{\mathrm{H2dry}} = \frac{29.3\cdot(0.034 - 0.012\cdot 0.851)}{3.5\cdot\left(\frac{25.2}{1000} - \frac{0.371}{1000}\cdot 0.851\right)} = 8.5\,\mu mol/mol$$

$$x_{\mathrm{H2Oexhdry}} = \frac{1.8}{2}\left(0.0249 - \frac{47.6}{1000000}\right) + 0.012\cdot 0.851 + 0.017\cdot 0.172 - \frac{8.5}{1000000} = 0.0353\,mol/mol$$

$$x_{\mathrm{dil/exhdry}} = \frac{0.822}{1\text{-}0.034} = 0.851\,mol/mol$$

$$x_{\mathrm{int/exhdry}} = \frac{1}{2\cdot 0.206}\left(\begin{array}{l}\left(\frac{1.8}{2} - 0.050 + 2 + 2\cdot 0.0003\right)\left(0.0249 - \frac{47.6}{1000000}\right) - \\ \left(\frac{29.3}{1000000} - \frac{50.4}{1000000} - 2\cdot\frac{12.1}{1000000} + \frac{8.5}{1000000}\right)\end{array}\right) = 0.172\,mol/mol$$

$$x_{\mathrm{raw/exhdry}} = \frac{1}{2}\left(\begin{array}{l}\left(\frac{1.8}{2} + 0.050 + 0.0001\right)\left(0.0249 - \frac{47.6}{1000000}\right) + \\ \left(2\cdot\frac{47.6}{1000000} + \frac{29.3}{1000000} - \frac{12.1}{1000000} + \frac{8.5}{1000000}\right)\end{array}\right) + 0.172 = 0.184\,mol/mol$$

$$x_{\mathrm{O2int}} = \frac{0.209820 - 0.000375}{1 + \frac{17.22}{1000}} = 0.206\,mol/mol$$

$$x_{\mathrm{CO2int}} = \frac{0.000375\cdot 1000}{1+\frac{17.22}{1000}} = 0.369\,mmol/mol$$

$$x_{\mathrm{H2Ointdry}} = \frac{16.93}{1 - \frac{16.93}{1000}} = 17.22\,mmol/mol$$

$$x_{\mathrm{CO2dil}} = \frac{0.375}{1 + \frac{12.01}{1000}} = 0.371\,mmol/mol$$

$$x_{\mathrm{H2Odildry}} = \frac{11.87}{1 - \frac{11.87}{1000}} = 12.01\,mmol/mol$$

$$x_{\mathrm{COdry}} = \frac{29.0}{1 - \frac{8.601}{1000}} = 29.3\,mmol/mol$$

$$x_{\mathrm{CO2dry}} = \frac{24.98}{1 - \frac{8.601}{1000}} = 25.2\,mmol/mol$$

$$x_{\mathrm{NOdry}} = \frac{50.0}{1 - \frac{8.601}{1000}} = 50.4\,mmol/mol$$

$$x_{\mathrm{NO2dry}} = \frac{12.0}{1 - \frac{8.601}{1000}} = 12.1\,mmol/mol$$

$$x_{\mathrm{THCdry}} = \frac{46}{1 - \frac{34.16}{1000}} = 47.6\,mmol/mol$$

$\alpha = 1.8$
$\beta = 0.05$
$\gamma = 0.0003$
$\delta = 0.0001$

(d) *Carbon mass fraction of fuel.* Determine carbon mass fraction of fuel, w_C, based on the fuel properties as determined in paragraph (e) of this section,

accounting for diesel exhaust fluid's contribution to α, β, γ, and δ, or that of any other fluid injected into the exhaust, if applicable. Calculate w_C using the following equation:

$$w_C = \frac{1 \cdot M_C}{1 \cdot M_C + \alpha \cdot M_H + \beta \cdot M_O + \gamma \cdot M_S + \delta \cdot M_N}$$

Eq. 1065.655-19

Where:

w_C = carbon mass fraction of the fuel (or mixture of test fuels) and any injected fluids.

M_C = molar mass of carbon.

α = atomic hydrogen-to-carbon ratio of the fuel (or mixture of test fuels) and any injected fluids.

M_H = molar mass of hydrogen.

β = atomic oxygen-to-carbon ratio of the fuel (or mixture of test fuels) and any injected fluids.

M_O = molar mass of oxygen.

γ = atomic sulfur-to-carbon ratio of the fuel (or mixture of test fuels) and any injected fluids.

M_S = molar mass of sulfur.

δ = atomic nitrogen-to-carbon ratio of the fuel (or mixture of test fuels) and any injected fluids.

M_N = molar mass of nitrogen.

Example:

$\alpha = 1.8$

$\beta = 0.05$

$\gamma = 0.0003$

$\delta = 0.0001$

$M_C = 12.0107$

$M_H = 1.00794$

$M_O = 15.9994$

$M_S = 32.065$

$M_N = 14.0067$

$$w_C = \frac{1 \cdot 12.0107}{1 \cdot 12.0107 + 1.8 \cdot 1.00794 + 0.05 \cdot 15.9994 + 0.0003 \cdot 32.065 + 0.0001 \cdot 14.0067}$$

$w_C = 0.8206$

(e) *Fuel and diesel exhaust fluid composition.* Determine fuel and diesel exhaust fluid composition represented by α, β, γ, and δ as described in this paragraph (e). When using measured fuel or diesel exhaust fluid properties, you must determine values for α and β; in all cases. If you determine compositions based on measured values and the default value listed in Table 1 of this section is zero, you may set γ and δ to zero; otherwise determine γ and δ (along with α and β) based on measured values. Determine elemental mass fractions and values for α, β, γ, and δ as follows:

(1) For liquid fuels, use the default values for α, β, γ, and δ in Table 1 of this section or determine mass fractions of liquid fuels for calculation of α, β, γ, and δ as follows:

(i) Determine the carbon and hydrogen mass fractions according to ASTM D5291 (incorporated by reference in §1065.1010). When using ASTM D5291 to determine carbon and hydrogen mass fractions of gasoline (with or without blended ethanol), use good engineering judgment to adapt the method as appropriate. This may include consulting with the instrument manufacturer on how to test high-volatility fuels. Allow the weight of volatile fuel samples to stabilize for 20 minutes before starting the analysis; if the weight still drifts after 20 minutes, prepare a new sample. Retest the sample if the carbon, hydrogen, and oxygen mass fractions do not add up to a total mass of 100 ±0.5%; if you do not measure oxygen, you may assume it has a zero concentration for this specification.

(ii) Determine oxygen mass fraction of gasoline (with or without blended ethanol) according to ASTM D5599 (incorporated by reference in §1065.1010). For all other liquid fuels, determine

the oxygen mass fraction using good engineering judgment.

(iii) Determine the nitrogen mass fraction according to ASTM D4629 or ASTM D5762 (incorporated by reference in § 1065.1010) for all liquid fuels. Select the correct method based on the expected nitrogen content.

(iv) Determine the sulfur mass fraction according to subpart H of this part.

(2) For gaseous fuels and diesel exhaust fluid, use the default values for α, β, γ, and δ in Table 1 of this section, or use good engineering judgment to determine those values based on measurement.

(3) For nonconstant fuel mixtures, you must account for the varying proportions of the different fuels. This generally applies for dual-fuel engines, but it also applies if diesel exhaust fluid is injected in a way that is not strictly proportional to fuel flow. Account for these varying concentrations either with a batch measurement that provides averaged values to represent the test interval, or by analyzing data from continuous mass rate measurements. Application of average values from a batch measurement generally applies to situations where one fluid is a minor component of the total fuel mixture, for example dual-fuel engines with diesel pilot injection, where the diesel pilot fuel mass is less than 5% of the total fuel mass and diesel exhaust fluid injection; consistent with good engineering judgment.

(4) Calculate α, β, γ, and δ using the following equations:

$$\alpha = \frac{M_{\mathrm{C}}}{M_{\mathrm{H}}} \cdot \frac{\sum_{\mathrm{j}=1}^{M} \dot{m}_{\mathrm{j}} \cdot w_{\mathrm{Hj}}}{\sum_{\mathrm{j}=1}^{M} \dot{m}_{\mathrm{j}} \cdot w_{\mathrm{Cj}}}$$

Eq. 1065.655-20

$$\beta = \frac{M_{\mathrm{C}}}{M_{\mathrm{O}}} \cdot \frac{\sum_{\mathrm{j}=1}^{M} \dot{m}_{\mathrm{j}} \cdot w_{\mathrm{Oj}}}{\sum_{\mathrm{j}=1}^{M} \dot{m}_{\mathrm{j}} \cdot w_{\mathrm{Cj}}}$$

Eq. 1065.655-21

$$\gamma = \frac{M_{\mathrm{C}}}{M_{\mathrm{S}}} \cdot \frac{\sum_{\mathrm{j}=1}^{M} \dot{m}_{\mathrm{j}} \cdot w_{\mathrm{Sj}}}{\sum_{\mathrm{j}=1}^{M} \dot{m}_{\mathrm{j}} \cdot w_{\mathrm{Cj}}}$$

Eq. 1065.655-22

$$\delta = \frac{M_C}{M_N} \cdot \frac{\sum_{j=1}^{M} \dot{m}_j \cdot w_{Nj}}{\sum_{j=1}^{M} \dot{m}_j \cdot w_{Cj}}$$

Eq. 1065.655-23

Where:

M = total number of fuels and injected fluids over the duty cycle.

j = an indexing variable that represents one fuel or injected fluid, starting with j = 1.

$\dot{m}_j$ = the mass flow rate of the fuel or any injected fluid j. For applications using a single fuel and no DEF fluid, set this value to 1. For batch measurements, divide the total mass of fuel over the test interval duration to determine a mass rate.

W_{Hj} = hydrogen mass fraction of fuel or any injected fluid j.

W_{Cj} = carbon mass fraction of fuel or any injected fluid j.

W_{Oj} = oxygen mass fraction of fuel or any injected fluid j.

W_{Sj} = sulfur mass fraction of fuel or any injected fluid j.

W_{Nj} = nitrogen mass fraction of fuel or any injected fluid j.

Example:

$N = 1$
$j = 1$
$\dot{m}_j = 1$
$W_{Hj} = 0.1239$
$W_{Cj} = 0.8206$
$W_{Oj} = 0.0547$
$W_{Sj} = 0.00066$
$W_{Nj} = 0.000095$
$M_C = 12.0107$
$M_H = 1.00794$
$M_O = 15.9994$
$M_S = 32.065$
$M_N = 14.0067$

$$\alpha = \frac{12.0107 \cdot 1 \cdot 0.1239}{1.00794 \cdot 1 \cdot 0.8206}$$

$$\beta = \frac{12.0107 \cdot 1 \cdot 0.0547}{15.9994 \cdot 1 \cdot 0.8206}$$

$$\gamma = \frac{12.0107 \cdot 1 \cdot 0.00066}{32.065 \cdot 1 \cdot 0.8206}$$

$$\delta = \frac{12.0107 \cdot 1 \cdot 0.000095}{14.0067 \cdot 1 \cdot 0.8206}$$

$\alpha = 1.799$
$\beta = 0.05004$
$\gamma = 0.0003012$
$\delta = 0.0001003$

TABLE 1 OF § 1065.655—DEFAULT VALUES OF α, β, γ, δ, AND W_C

Fuel or injected fluid	Atomic hydrogen, oxygen, sulfur, and nitrogen-to-carbon ratios $CH\alpha O\beta S\gamma N\delta$	Carbon mass fraction, W_C g/g
Gasoline	$CH_{1.85}O_0S_0N_0$	0.866

TABLE 1 OF § 1065.655—DEFAULT VALUES OF α, β, γ, δ, AND W_C—Continued

Fuel or injected fluid	Atomic hydrogen, oxygen, sulfur, and nitrogen-to-carbon ratios $CH\alpha O\beta S\gamma N\delta$	Carbon mass fraction, W_C g/g
E10 Gasoline	$CH_{1.92}O_{0.03}S_0N_0$	0.833
E15 Gasoline	$CH_{1.95}O_{0.05}S_0N_0$	0.817
E85 Gasoline	$CH_{2.73}O_{0.38}S_0N_0$	0.576
E100 Ethanol	$CH_3O_{0.5}S_0N_0$	0.521
M100 Methanol	$CH_4O_1S_0N_0$	0.375
#1 Diesel	$CH_{1.93}O_0S_0N_0$	0.861
#2 Diesel	$CH_{1.80}O_0S_0N_0$	0.869
Liquefied petroleum gas	$CH_{2.64}O_0S_0N_0$	0.819
Natural gas	$CH_{3.78}\ O_{0.016}S_0N_0$	0.747
Residual fuel blends	Must be determined by measured fuel properties as described in paragraph (d)(1) of this section.	
Diesel exhaust fluid	$CH_{17.85}O_{7.92}S_0N_2$	0.065

(f) *Calculated raw exhaust molar flow rate from measured intake air molar flow rate or fuel mass flow rate.* You may calculate the raw exhaust molar flow rate from which you sampled emissions, $\dot{n}_{exh}$, based on the measured intake air molar flow rate, $\dot{n}_{int}$, or the measured fuel mass flow rate, $\dot{m}_{fuel}$, and the values calculated using the chemical balance in paragraph (c) of this section. The chemical balance must be based on raw exhaust gas concentrations. Solve for the chemical balance in paragraph (c) of this section at the same frequency that you update and record or $\dot{n}_{int}$ or $\dot{m}_{fuel}$. For laboratory tests, calculating raw exhaust molar flow rate using measured fuel mass flow rate is valid only for steady-state testing. See § 1065.915(d)(5)(iv) for application to field testing.

(1) *Crankcase flow rate.* If engines are not subject to crankcase controls under the standard-setting part, you may calculate raw exhaust flow based on $\dot{n}_{int}$ or $\dot{m}_{fuel}$ using one of the following:

(i) You may measure flow rate through the crankcase vent and subtract it from the calculated exhaust flow.

(ii) You may estimate flow rate through the crankcase vent by engineering analysis as long as the uncertainty in your calculation does not adversely affect your ability to show that your engines comply with applicable emission standards.

(iii) You may assume your crankcase vent flow rate is zero.

(2) *Intake air molar flow rate calculation.* Calculate $\dot{n}_{exh}$ based on $\dot{n}_{int}$ using the following equation:

$$\dot{n}_{exh} = \frac{\dot{n}_{int}}{\left(1 + \frac{\left(x_{int/exhdry} - x_{raw/exhdry}\right)}{\left(1 + x_{H2Oexhdry}\right)}\right)}$$

Eq. 1065.655-24

Where:

$\dot{n}_{exh}$ = raw exhaust molar flow rate from which you measured emissions.

$\dot{n}_{int}$ = intake air molar flow rate including humidity in intake air.

Example:

$\dot{n}_{int}$ = 3.780 mol/s

$x_{int/exhdry}$ = 0.69021 mol/mol

$x_{raw/exhdry}$ = 1.10764 mol/mol

$x_{H20exhdry}$ = 107.64 mmol/mol = 0.10764 mol/mol

$$\dot{n}_{exh} = \frac{3.780}{\left(1 + \frac{(0.69021 - 1.10764)}{(1 + 0.10764)}\right)}$$

$$\dot{n}_{exh} = 6.066 \text{ mol/s}$$

(3) *Fluid mass flow rate calculation.* This calculation may be used only for steady-state laboratory testing. See §1065.915(d)(5)(iv) for application to field testing. Calculate $\dot{n}_{exh}$ based on using the following equation:

$$\dot{n}_{exh} = \sum_{j=1}^{N} \dot{m}_j \cdot \frac{w_C \cdot \left(1 + x_{H2Oexhdry}\right)}{M_C \cdot x_{Ccombdry}}$$

Eq. 1065.655-25

Where:

$\dot{n}_{exh}$ = raw exhaust molar flow rate from which you measured emissions.

N = total number of fuels and injected fluids over the duty cycle.

j = an indexing variable that represents one fuel or injected fluid, starting with j = 1.

$\dot{m}_j$ = the mass flow rate of the fuel or any injected fluid j.

Example:

$N = 1$

$j = 1$

$\dot{m}_j$ = 7.559 g/s

w_C = 0.869 g/g

M_C = 12.0107 g/mol

$\chi_{Ccombdry}$ = 99.87 mmol/mol = 0.09987 mol/mol

$\chi_{H20exhdry}$ = 107.64 mmol/mol = 0.10764 mol/mol

$$\dot{n}_{exh} = 7.559 \cdot \frac{0.869 \cdot (1 + 0.10764)}{12.0107 \cdot 0.09987}$$

$\dot{n}_{exh}$ = 6.066 mol/s

(g) *Calculated raw exhaust molar flow rate from measured intake air molar flow rate, dilute exhaust molar flow rate, and dilute chemical balance.* You may calculate the raw exhaust molar flow rate, $\dot{n}_{exh}$, based on the measured intake air molar flow rate, $\dot{n}_{int}$, the measured dilute exhaust molar flow rate, $\dot{n}_{dexh}$, and the values calculated using the chemical balance in paragraph (c) of this section. Note that the chemical balance must be based on dilute exhaust gas concentrations. For continuous-flow calculations, solve for the chemical balance in paragraph (c) of this section at the same frequency that you update and record $\dot{n}_{int}$ and $\dot{n}_{dexh}$. This calculated $\dot{n}_{exh}$ may be used for the PM dilution ratio verification in §1065.546; the calculation of dilution air molar flow rate in the background correction in §1065.667; and the calculation of mass of emissions in §1065.650(c) for species that are measured in the raw exhaust.

(1) *Crankcase flow rate.* If engines are not subject to crankcase controls under the standard-setting part, calculate raw exhaust flow as described in paragraph (e)(1) of this section.

(2) *Dilute exhaust and intake air molar flow rate calculation.* Calculate $\dot{n}_{exh}$ as follows:

$$\dot{n}_{\text{exh}} = \left(x_{\text{raw/exhdry}} - x_{\text{int/exhdry}}\right) \cdot \left(1 - x_{\text{H2Oexh}}\right) \cdot \dot{n}_{\text{dexh}} + \dot{n}_{\text{int}}$$

Eq. 1065.655-26

Example:
$\dot{n}_{\text{int}}$ = 7.930 mol/s
$x_{\text{raw/exhdry}}$ = 0.1544 mol/mol
$x_{\text{int/exhdry}}$ = 0.1451 mol/mol
$x_{\text{H20/exh}}$ = 32.46 mmol/mol = 0.03246 mol/mol
$\dot{n}_{\text{dexh}}$ = 49.02 mol/s
$\dot{n}_{\text{exh}}$ = (0.1544 − 0.1451) · (1 − 0.03246) · 49.02 + 7.930 = 0.4411 + 7.930 = 8.371 mol/s

[73 FR 37331, June 30, 2008, as amended at 73 FR 59334, Oct. 8, 2008; 75 FR 23051, Apr. 30, 2010; 76 FR 57458, Sept. 15, 2011; 79 FR 23799, Apr. 28, 2014; 81 FR 74182, Oct. 25, 2016]

EFFECTIVE DATE NOTE: At 86 FR 34563, June 29, 2021, § 1065.655 was amended, effective July 29, 2021.

§ 1065.659 Removed water correction.

(a) If you remove water upstream of a concentration measurement, x, correct for the removed water. Perform this correction based on the amount of water at the concentration measurement, $x_{\text{H2O[emission]meas}}$, and at the flow meter, x_{H2Oexh}, whose flow is used to determine the mass emission rate or total mass over a test interval. For continuous analyzers downstream of a sample dryer for transient and ramped-modal cycles, you must apply this correction on a continuous basis over the test interval, even if you use one of the options in § 1065.145(e)(2) that results in a constant value for $x_{\text{H2O[emission]meas}}$ because x_{H2Oexh} varies over the test interval. For batch analyzers, determine the flow-weighted average based on the continuous x_{H2Oexh} values determined as described in paragraph (c) of this section. For batch analyzers, you may determine the flow-weighted average x_{H2Oexh} based on a single value of x_{H2Oexh} determined as described in paragraphs (c)(2) and (3) of this section, using flow-weighted average or batch concentration inputs.

(b) Determine the amount of water remaining downstream of a sample dryer and at the concentration measurement using one of the methods described in § 1065.145(e)(2). If you use a sample dryer upstream of an analyzer and if the calculated amount of water remaining downstream of the sample dryer and at the concentration measurement, $x_{\text{H2O[emission]meas}}$, is higher than the amount of water at the flow meter, x_{H2Oexh}, set $x_{\text{H2O[emission]meas}}$ equal to x_{H2Oexh}. If you use a sample dryer upstream of storage media, you must be able to demonstrate that the sample dryer is removing water continuously (*i.e.*, x_{H2Oexh} is higher than $x_{\text{H2O[emission]meas}}$ throughout the test interval).

(c) For a concentration measurement where you did not remove water, you may set $x_{\text{H2O[emission]meas}}$ equal to x_{H2Oexh}. You may determine the amount of water at the flow meter, x_{H2Oexh}, using any of the following methods:

(1) Measure the dewpoint and absolute pressure and calculate the amount of water as described in § 1065.645.

(2) If the measurement comes from raw exhaust, you may determine the amount of water based on intake-air humidity, plus a chemical balance of fuel, intake air, and exhaust as described in § 1065.655.

(3) If the measurement comes from diluted exhaust, you may determine the amount of water based on intake-air humidity, dilution air humidity, and a chemical balance of fuel, intake air, and exhaust as described in § 1065.655.

(d) Perform a removed water correction to the concentration measurement using the following equation:

$$x = x_{[\text{emission}]\text{meas}} \cdot \left(\frac{1 - x_{\text{H2Oexh}}}{1 - x_{\text{H2O}[\text{emission}]\text{meas}}} \right)$$

Eq. 1065.659-1

Example:

x_{COmeas} = 29.0 μmol/mol

$x_{\text{H2OCOmeas}}$ = 8.601 mmol/mol = 0.008601 mol/mol

x_{H2Oexh} = 34.04 mmol/mol = 0.03404 mol/mol

$$x_{\text{CO}} = 29.0 \cdot \left(\frac{1 - 0.03404}{1 - 0.008601} \right)$$

x_{CO} = 28.3 μmol/mol

[73 FR 37335, June 30, 2008, as amended at 76 FR 57462, Sept. 15, 2011; 79 FR 23804, Apr. 28, 2014]

EFFECTIVE DATE NOTE: At 86 FR 34566, June 29, 2021, § 1065.659 was amended, effective July 29, 2021.

§ 1065.660 THC, NMHC, NMNEHC, CH_4, and C_2H_6 determination.

(a) *THC determination and initial THC/CH_4 contamination corrections.* (1) If we require you to determine THC emissions, calculate $x_{\text{THC[THC-FID]cor}}$ using the initial THC contamination concentration $x_{\text{THC[THC-FID]init}}$ from § 1065.520 as follows:

$$x_{\text{THC[THC-FID]cor}} = x_{\text{THC[THC-FID]uncor}} - x_{\text{THC[THC-FID]init}}$$

Eq. 1065.660-1

Example:
x_{THCuncor} = 150.3 μmol/mol
x_{THCinit} = 1.1 μmol/mol
x_{THCcor} = 150.3—1.1
x_{THCcor} = 149.2 μmol/mol

(2) For the NMHC determination described in paragraph (b) of this section, correct $x_{\text{THC[THC-FID]}}$ for initial THC contamination using Eq. 1065.660–1. You may correct $x_{\text{THC[NMC-FID]}}$ for initial contamination of the CH_4 sample train using Eq. 1065.660–1, substituting in CH_4 concentrations for THC.

(3) For the NMNEHC determination described in paragraph (c) of this section, correct $x_{\text{THC[THC-FID]}}$ for initial THC contamination using Eq. 1065.660–1. You may correct $x_{\text{THC[NMC-FID]}}$ for initial contamination of the CH_4 sample train

using Eq. 1065.660–1, substituting in CH_4 concentrations for THC.

(4) For the CH_4 determination described in paragraph (d) of this section, you may correct $x_{THC[NMC–FID]}$ for initial THC contamination of the CH_4 sample train using Eq. 1065.660–1, substituting in CH_4 concentrations for THC.

(b) *NMHC determination*. Use one of the following to determine NMHC concentration, x_{NMHC}:

(1) If you do not measure CH_4, you may omit the calculation of NMHC concentrations and calculate the mass of NMHC as described in § 1065.650(c)(5).

(2) For nonmethane cutters, calculate x_{NMHC} using the nonmethane cutter's penetration fraction (*PF*) of CH_4 and the response factor penetration fraction (*RFPF*) of C_2H_6 from § 1065.365, the response factor (*RF*) of the THC FID to CH_4 from § 1065.360, the initial THC contamination and dry-to-wet corrected THC concentration $x_{THC[THC-FID]cor}$ as determined in paragraph (a) of this section, and the dry-to-wet corrected CH_4 concentration $x_{THC[NMC-FID]cor}$ optionally corrected for initial THC contamination as determined in paragraph (a) of this section.

(i) Use the following equation for penetration fractions determined using an NMC configuration as outlined in § 1065.365(d):

$$x_{NMHC} = \frac{x_{THC[THC-FID]cor} - x_{THC[NMC-FID]cor} \cdot RF_{CH4[THC-FID]}}{1 - RFPF_{C2H6[NMC-FID]} \cdot RF_{CH4[THC-FID]}}$$

Eq. 1065.660-2

Where:

x_{NMHC} = concentration of NMHC.

$x_{THC[THC-FID]cor}$ = concentration of THC, initial THC contamination and dry-to-wet corrected, as measured by the THC FID during sampling while bypassing the NMC.

$x_{THC[NMC-FID]cor}$ = concentration of THC, initial THC contamination (optional) and dry-to-wet corrected, as measured by the NMC FID during sampling through the NMC.

$RF_{CH4[THC-FID]}$ = response factor of THC FID to CH_4, according to § 1065.360(d).

$RFPF_{C2H6[NMC-FID]}$ = nonmethane cutter combined ethane response factor and penetration fraction, according to § 1065.365(d).

Example:

$x_{THC[THC-FID]cor}$ = 150.3 μmol/mol

$x_{THC[NMC-FID]cor}$ = 20.5 μmol/mol

$RFPF_{C2H6[NMC-FID]}$ = 0.019

$RF_{CH4[THC-FID]}$ = 1.05

$$x_{NMHC} = \frac{150.3 - 20.5 \cdot 1.05}{1 - 0.019 \cdot 1.05}$$

x_{NMHC} = 131.4 μmol/mol

(ii) For penetration fractions determined using an NMC configuration as outlined in section § 1065.365(e), use the following equation:

$$x_{NMHC} = \frac{x_{THC[THC-FID]cor} \cdot PF_{CH4[NMC-FID]} - x_{THC[NMC-FID]cor}}{PF_{CH4[NMC-FID]} - PF_{C2H6[NMC-FID]}}$$

Eq. 1065.660-3

Where:

x_{NMHC} = concentration of NMHC.

$x_{THC[THC-FID]cor}$ = concentration of THC, initial THC contamination and dry-to-wet corrected, as measured by the THC FID during sampling while bypassing the NMC.

$PF_{CH4[NMC-FID]}$ = nonmethane cutter CH_4 penetration fraction, according to §1065.365(e).

$x_{THC[NMC-FID]cor}$ = concentration of THC, initial THC contamination (optional) and dry-to-wet corrected, as measured by the THC FID during sampling through the NMC.

$PF_{C2H6[NMC-FID]}$ = nonmethane cutter ethane penetration fraction, according to §1065.365(e).

Example:

$x_{THC[THC-FID]cor}$ = 150.3 μmol/mol

$PF_{CH4[NMC-FID]}$ = 0.990

$x_{THC[NMC-FID]cor}$ = 20.5 μmol/mol

$PF_{C2H6[NMC-FID]}$ = 0.020

$$x_{NMHC} = \frac{150.3 \cdot 0.990 - 20.5}{0.990 - 0.020}$$

x_{NMHC} = 132.3 μmol/mol

(iii) For penetration fractions determined using an NMC configuration as outlined in section §1065.365(f), use the following equation:

$$x_{NMHC} = \frac{x_{THC[THC-FID]cor} \cdot PF_{CH4[NMC-FID]} - x_{THC[NMC-FID]cor} \cdot RF_{CH4[THC-FID]}}{PF_{CH4[NMC-FID]} - RFPF_{C2H6[NMC-FID]} \cdot RF_{CH4[THC-FID]}}$$

Eq. 1065.660-4

Where:

x_{NMHC} = concentration of NMHC.

$x_{THC[THC-FID]cor}$ = concentration of THC, initial THC contamination and dry-to-wet corrected, as measured by the THC FID during sampling while bypassing the NMC.

$PF_{CH4[NMC-FID]}$ = nonmethane cutter CH_4 penetration fraction, according to §1065.365(f).

$x_{THC[NMC-FID]cor}$ = concentration of THC, initial THC contamination (optional) and dry-to-wet corrected, as measured by the THC FID during sampling through the NMC.

$RFPF_{C2H6[NMC-FID]}$ = nonmethane cutter CH_4 combined ethane response factor and penetration fraction, according to §1065.365(f).

$RF_{CH4[THC-FID]}$ = response factor of THC FID to CH_4, according to §1065.360(d).

Example:

$x_{THC[THC-FID]cor}$ = 150.3 μmol/mol

$PF_{CH4[NMC-FID]}$ = 0.990

$x_{THC[NMC-FID]cor}$ = 20.5 μmol/mol

$RFPF_{C2H6[NMC-FID]}$ = 0.019

$RF_{CH4[THC-FID]}$ = 0.980

$$x_{NMHC} = \frac{150.3 \cdot 0.990 - 20.5 \cdot 0.980}{0.990 - 0.019 \cdot 0.980}$$

x_{NMHC} = 132.5 μmol/mol

(3) For a GC–FID or FTIR, calculate x_{NMHC} using the THC analyzer's response factor (RF) for CH_4, from §1065.360, and the initial THC contamination and dry-to-wet corrected THC concentration $x_{THC[THC-FID]cor}$ as determined in paragraph (a) of this section as follows:

$$x_{\mathrm{NMHC}} = x_{\mathrm{THC[THC\text{-}FID]cor}} - RF_{\mathrm{CH4[THC\text{-}FID]}} \cdot x_{\mathrm{CH4}}$$

Eq. 1065.660-5

Where:

x_{NMHC} = concentration of NMHC.

$x_{\mathrm{THC[THC\text{–}FID]cor}}$ = concentration of THC, initial THC contamination and dry-to-wet corrected, as measured by the THC FID.

$RF_{\mathrm{CH4[THC\text{–}FID]}}$ = response factor of THC–FID to CH_4.

x_{CH4} = concentration of CH_4, dry-to-wet corrected, as measured by the GC–FID or FTIR.

Example:

$x_{\mathrm{THC[THC\text{–}FID]cor}}$ = 145.6 μmol/mol

$RF_{\mathrm{CH4[THC\text{–}FID]}}$ = 0.970

x_{CH4} = 18.9 μmol/mol

$x_{\mathrm{NMHC}} = 145.6 - 0.970 \cdot 18.9$

x_{NMHC} = 127.3 μmol/mol

(4) For an FTIR, calculate x_{NMHC} by summing the hydrocarbon species listed in § 1065.266(c) as follows:

$$x_{\mathrm{NMHC}} = \sum_{i=1}^{N} \left(x_{\mathrm{HCi}} - x_{\mathrm{HCi\text{-}init}} \right)$$

Eq. 1065.660-6

Where:

x_{NMHC} = concentration of NMHC.

x_{HCi} = the C_1-equivalent concentration of hydrocarbon species *i* as measured by the FTIR, not corrected for initial contamination.

$x_{\mathrm{HCi\text{-}init}}$ = the C_1-equivalent concentration of the initial system contamination (optional) of hydrocarbon species *i*, dry-to-wet corrected, as measured by the FTIR.

Example:

x_{C2H6} = 4.9 μmol/mol

x_{C2H4} = 0.9 μmol/mol

x_{C2H2} = 0.8 μmol/mol

x_{C3H8} = 0.4 μmol/mol

x_{C3H6} = 0.5 μmol/mol

x_{C4H10} = 0.3 μmol/mol

x_{CH2O} = 0.8 μmol/mol

x_{C2H4O} = 0.3 μmol/mol

x_{C2H2O2} = 0.1 μmol/mol

x_{CH4O} = 0.1 μmol/mol

x_{NMHC} = 4.9 + 0.9 + 0.8 + 0.4 + 0.5 + 0.3 + 0.8 + 0.3 + 0.1 + 0.1

x_{NMHC} = 9.1 μmol/mol

(c) *NMNEHC determination*. Use one of the following methods to determine NMNEHC concentration, x_{NMNEHC}:

(1) If the content of your test fuel contains less than 0.010 mol/mol of ethane, you may omit the calculation of NMNEHC concentrations and calculate the mass of NMNEHC as described in § 1065.650(c)(6).

(2) For a GC–FID or FTIR, calculate x_{NMNEHC} using the THC analyzer's response factors (*RF*) for CH_4 and C_2H_6, from § 1065.360, and the initial contamination and dry-to-wet corrected THC concentration $x_{\mathrm{THC[THC\text{–}FID]cor}}$ as determined in paragraph (a) of this section as follows:

$$x_{\mathrm{NMNEHC}} = x_{\mathrm{THC[THC\text{-}FID]cor}} - RF_{\mathrm{CH4[THC\text{-}FID]}} \cdot x_{\mathrm{CH4}} - RF_{\mathrm{C2H6[THC\text{-}FID]}} \cdot x_{\mathrm{C2H6}}$$

Eq. 1065.660-7

Where:

x_{NMNEHC} = concentration of NMNEHC.

$x_{THC[THC-FID]cor}$ = concentration of THC, initial THC contamination and dry-to-wet corrected, as measured by the THC FID.

$RF_{CH4[THC-FID]}$ = response factor of THC–FID to CH_4.

x_{CH4} = concentration of CH_4, dry-to-wet corrected, as measured by the GC–FID or FTIR.

$RF_{C2H6[THC-FID]}$ = response factor of THC–FID to C_2H_6.

x_{C2H6} = the C_1-equivalent concentration of C_2H_6, dry-to-wet corrected, as measured by the GC–FID or FTIR.

Example:

$x_{THC[THC-FID]cor}$ = 145.6 μmol/mol
$RF_{CH4[THC-FID]}$ = 0.970
x_{CH4} = 18.9 μmol/mol
$RF_{C2H6[THC-FID]}$ = 1.02
x_{C2H6} = 10.6 μmol/mol
x_{NMHC} = 145.6—0.970 · 18.9—1.02 · 10.6
x_{NMHC} = 116.5 μmol/mol

(3) For an FTIR, calculate x_{NMNEHC} by summing the hydrocarbon species listed in §1065.266(c) as follows:

$$x_{NMNEHC} = \sum_{i=1}^{N} \left(x_{HCi} - x_{HCi\text{-}init} \right)$$

Eq. 1065.660-8

Where:

x_{NMNEHC} = concentration of NMNEHC.

x_{HCi} = the C_1-equivalent concentration of hydrocarbon species *i* as measured by the FTIR, not corrected for initial contamination.

$x_{HCi\text{-}init}$ = the C_1-equivalent concentration of the initial system contamination (optional) of hydrocarbon species *i*, dry-to-wet corrected, as measured by the FTIR.

Example:

x_{C2H4} = 0.9 μmol/mol
x_{C2H2} = 0.8 μmol/mol
x_{C3H8} = 0.4 μmol/mol
x_{C3H6} = 0.5 μmol/mol
x_{C4H10} = 0.3 μmol/mol
x_{CH2O} = 0.8 μmol/mol
x_{C2H4O} = 0.3 μmol/mol
x_{C2H2O2} = 0.1 μmol/mol
x_{CH4O} = 0.1 μmol/mol
x_{NMNEHC} = 0.9 + 0.8 + 0.4 + 0.5 + 0.3 + 0.8 + 0.3 + 0.1 + 0.1
x_{NMNEHC} = 4.2 μmol/mol

(d) *CH_4 determination*. Use one of the following methods to determine CH_4 concentration, χ_{CH4}:

(1) For nonmethane cutters, calculate xCH_4 using the nonmethane cutter's penetration fraction (*PF*) of CH_4 and the response factor penetration fraction (*RFPF*) of C_2H_6 from §1065.365, the response factor (*RF*) of the THC FID to CH_4 from §1065.360, the initial THC contamination and dry-to-wet corrected THC concentration $x_{THC[THC-FID]cor}$ as determined in paragraph (a) of this section, and the dry-to-wet corrected CH_4 concentration $x_{THC[NMC-FID]cor}$ optionally corrected for initial THC contamination as determined in paragraph (a) of this section.

(i) Use the following equation for penetration fractions determined using an NMC configuration as outlined in §1065.365(d):

$$x_{CH4} = \frac{x_{THC[NMC\text{-}FID]cor} - x_{THC[THC\text{-}FID]cor} \cdot RFPF_{C2H6[NMC\text{-}FID]}}{1 - RFPF_{C2H6[NMC\text{-}FID]} \cdot RF_{CH4[THC\text{-}FID]}}$$

Eq. 1065.660-9

Where:

x_{CH4} = concentration of CH_4.

$x_{THC[NMC\text{-}FID]cor}$ = concentration of THC, initial THC contamination (optional) and dry-to-wet corrected, as measured by the NMC FID during sampling through the NMC.

$x_{THC[THC\text{-}FID]cor}$ = concentration of THC, initial THC contamination and dry-to-wet corrected, as measured by the THC FID during sampling while bypassing the NMC.

$RFPF_{C2H6[NMC\text{-}FID]}$ = the combined ethane response factor and penetration fraction of the nonmethane cutter, according to §1065.365(d).

$RF_{CH4[THC\text{–}FID]}$ = response factor of THC FID to CH_4, according to §1065.360(d).

Example:

$x_{THC[NMC\text{-}FID]cor}$ = 10.4 μmol/mol

$x_{THC[THC\text{-}FID]cor}$ = 150.3 μmol/mol

$RFPF_{C2H6[NMC\text{-}FID]}$ = 0.019

$RF_{CH4[THC\text{-}FID]}$ = 1.05

$$x_{CH4} = \frac{10.4 - 150.3 \cdot 0.019}{1 - 0.019 \cdot 1.05}$$

x_{CH4} = 7.69 μmol/mol

(ii) For penetration fractions determined using an NMC configuration as outlined in §1065.365(e), use the following equation:

$$x_{CH4} = \frac{x_{THC[NMC\text{-}FID]cor} - x_{THC[THC\text{-}FID]cor} \cdot PF_{C2H6[NMC\text{-}FID]}}{RF_{CH4[THC\text{-}FID]} \cdot \left(PF_{CH4[NMC\text{-}FID]} - PF_{C2H6[NMC\text{-}FID]}\right)}$$

Eq. 1065.660-10

Where:

x_{CH4} = concentration of CH_4.

$x_{THC[NMC\text{-}FID]cor}$ = concentration of THC, initial THC contamination (optional) and dry-to-wet corrected, as measured by the NMC FID during sampling through the NMC.

$x_{THC[THC\text{-}FID]cor}$ = concentration of THC, initial THC contamination and dry-to-wet corrected, as measured by the THC FID during sampling while bypassing the NMC.

$PF_{C2H6[NMC\text{–}FID]}$ = nonmethane cutter ethane penetration fraction, according to §1065.365(e).

$RF_{CH4[THC\text{–}FID]}$ = response factor of THC FID to CH_4, according to §1065.360(d).

$PF_{CH4[NMC\text{–}FID]}$ = nonmethane cutter CH_4 penetration fraction, according to §1065.365(e).

Example:

$x_{THC[NMC\text{–}FID]cor}$ = 10.4 μmol/mol

$x_{THC[THC\text{–}FID]cor}$ = 150.3 μmol/mol

$PF_{C2H6[NMC\text{–}FID]}$ = 0.020

$RF_{CH4[THC\text{–}FID]}$ = 1.05

$PF_{CH4[NMC\text{–}FID]}$ = 0.990

$$x_{CH4} = \frac{10.4 - 150.3 \cdot 0.020}{1.05 \cdot \left(0.990 - 0.020\right)}$$

x_{CH4} = 7.25 μmol/mol

(iii) For penetration fractions determined using an NMC configuration as outlined in §1065.365(f), use the following equation:

$$x_{CH4} = \frac{x_{THC[NMC\text{-}FID]cor} - x_{THC[THC\text{-}FID]cor} \cdot RFPF_{C2H6[NMC\text{-}FID]}}{PF_{CH4[NMC\text{-}FID]} - RFPF_{C2H6[NMC\text{-}FID]} \cdot RF_{CH4[THC\text{-}FID]}}$$

Eq. 1065.660-11

Where:

x_{CH4} = concentration of CH_4.

$x_{THC[NMC–FID]cor}$ = concentration of THC, initial THC contamination (optional) and dry-to-wet corrected, as measured by the NMC FID during sampling through the NMC.

$x_{THC[THC–FID]cor}$ = concentration of THC, initial THC contamination and dry-to-wet corrected, as measured by the THC FID during sampling while bypassing the NMC.

$RFPF_{C2H6[NMC–FID]}$ = the combined ethane response factor and penetration fraction of the nonmethane cutter, according to §1065.365(f).

$PF_{CH4[NMC–FID]}$ = nonmethane cutter CH_4 penetration fraction, according to §1065.365(f).

$RF_{CH4[THC–FID]}$ = response factor of THC FID to CH_4, according to §1065.360(d).

Example:

$x_{THC[NMC–FID]cor}$ = 10.4 μmol/mol

$x_{THC[THC–FID]cor}$ = 150.3 μmol/mol

$RFPF_{C2H6[NMC–FID]}$ = 0.019

$PF_{CH4[NMC–FID]}$ = 0.990

$RF_{CH4[THC–FID]}$ = 1.05

$$x_{CH4} = \frac{10.4 - 150.3 \cdot 0.019}{0.990 - 0.019 \cdot 1.05}$$

x_{CH4} = 7.78 μmol/mol

(2) For a GC–FID or FTIR, x_{CH4} is the actual dry-to-wet corrected CH_4 concentration as measured by the analyzer.

(e) *C_2H_6 determination*. For a GC–FID or FTIR, x_{C2H6} is the C_1-equivalent, dry-to-wet corrected C_2H_6 concentration as measured by the analyzer.

[76 FR 57462, Sept. 15, 2011, as amended at 81 FR 74184, Oct. 25, 2016]

EFFECTIVE DATE NOTE: At 86 FR 34566, June 29, 2021, §1065.660 was amended, effective July 29, 2021.

§1065.665 THCE and NMHCE determination.

(a) If you measured an oxygenated hydrocarbon's mass concentration, first calculate its molar concentration in the exhaust sample stream from which the sample was taken (raw or diluted exhaust), and convert this into a C_1-equivalent molar concentration. Add these C_1-equivalent molar concentrations to the molar concentration of non-oxygenated total hydrocarbon (NOTHC). The result is the molar concentration of total hydrocarbon equivalent (THCE). Calculate THCE concentration using the following equations, noting that Eq. 1065.665–3 is required only if you need to convert your oxygenated hydrocarbon (OHC) concentration from mass to moles:

$$x_{THCE} = x_{NOTHC} + \sum_{i=1}^{N} \left(x_{OHCi} - x_{OHCi\text{-}init} \right)$$

Eq. 1065.665-1

$$x_{\mathrm{NOTHC}} = x_{\mathrm{THC[THC\text{-}FID]cor}} - \sum_{i=1}^{N}\left(\left(x_{\mathrm{OHCi}} - x_{\mathrm{OHCi\text{-}init}}\right)\cdot RF_{\mathrm{OHCi[THC\text{-}FID]}}\right)$$

Eq. 1065.665-2

$$x_{\mathrm{OHCi}} = \frac{\dfrac{m_{\mathrm{dexhOHCi}}}{M_{\mathrm{OHCi}}}}{\dfrac{m_{\mathrm{dexh}}}{M_{\mathrm{dexh}}}} = \frac{n_{\mathrm{dexhOHCi}}}{n_{\mathrm{dexh}}}$$

Eq. 1065.665-3

Where:

x_{THCE} = the sum of the C_1-equivalent concentrations of non-oxygenated hydrocarbon, alcohols, and aldehydes.

x_{NOTHC} = the sum of the C_1-equivalent concentrations of NOTHC.

x_{OHCi} = the C_1-equivalent concentration of oxygenated species i in diluted exhaust, not corrected for initial contamination.

$x_{\mathrm{OHCi\text{-}init}}$ = the C_1-equivalent concentration of the initial system contamination (optional) of oxygenated species i, dry-to-wet corrected.

$x_{\mathrm{THC[THC\text{–}FID]cor}}$ = the C_1-equivalent response to NOTHC and all OHC in diluted exhaust, HC contamination and dry-to-wet corrected, as measured by the THC–FID.

$RF_{\mathrm{OHCi[THC\text{–}FID]}}$ = the response factor of the FID to species i relative to propane on a C_1-equivalent basis.

$C^{\#}$ = the mean number of carbon atoms in the particular compound.

M_{dexh} = the molar mass of diluted exhaust as determine in §1065.340.

m_{dexhOHCi} = the mass of oxygenated species i in dilute exhaust.

M_{OHCi} = the C_1-equivalent molecular weight of oxygenated species i.

m_{dexh} = the mass of diluted exhaust

n_{dexhOHCi} = the number of moles of oxygenated species i in total diluted exhaust flow.

n_{dexh} = the total diluted exhaust flow.

(b) If we require you to determine nonmethane hydrocarbon equivalent (NMHCE), use the following equation:

$$x_{\mathrm{NMHCE}} = x_{\mathrm{THCE}} - RF_{\mathrm{CH4[THC\text{-}FID]}}\cdot x_{\mathrm{CH4}}$$

Eq. 1065.665-4

Where:

x_{NMHCE} = the sum of the C_1-equivalent concentrations of nonoxygenated nonmethane hydrocarbon (NONMHC), alcohols, and aldehydes.

$RF_{\mathrm{CH4[THC\text{–}FID]}}$ = the response factor of THC–FID to CH_4.

x_{CH4} = concentration of CH_4, HC contamination (optional) and dry-to-wet corrected, as measured by the gas chromatograph FID.

(c) The following example shows how to determine NMHCE emissions based on ethanol (C_2H_5OH), methanol (CH_3OH), acetaldehyde (C_2H_4O), and formaldehyde (CH_2O) as C_1-equivalent molar concentrations:

$x_{\mathrm{THC[THC\text{-}FID]cor}}$ = 145.6 μmol/mol
x_{CH4} = 18.9 μmol/mol
x_{C2H5OH} = 100.8 μmol/mol
x_{CH3OH} = 1.1 μmol/mol
x_{C2H4O} = 19.1 μmol/mol
x_{CH2O} = 1.3 μmol/mol
$RF_{\mathrm{CH4[THC\text{-}FID]}}$ = 1.07
$RF_{\mathrm{C2H5OH[THC\text{-}FID]}}$ = 0.76
$RF_{\mathrm{CH3OH[THC\text{-}FID]}}$ = 0.74
$RF_{\mathrm{H2H4O[THC\text{-}FID]}}$ = 0.50
$RF_{\mathrm{CH2O[THC\text{-}FID]}}$ = 0.0

$x_{NMHCE} = x_{THC[THC\text{-}FID]cor} - (x_{C2H5OH} \cdot RF_{C2H5OH[THC\text{-}FID]} + x_{CH3OH} \cdot RF_{CH3OH[THC\text{-}FID]} + x_{C2H4O} \cdot RF_{C2H4O[THC\text{-}FID]} + x_{CH2O} \cdot RF_{CH2O[THC\text{-}FID]}) + x_{C2H5OH} + x_{CH3OH} + x_{C2H4O} + x_{CH2O} - (RF_{CH4[THC\text{-}FID]} \cdot x_{CH4})$

$x_{NMHCE} = 145.6 - (100.8 \cdot 0.76 + 1.1 \cdot 0.74 + 19.1 \cdot 0.50 + 1.3 \cdot 0) + 100.8 + 1.1 + 19.1 + 1.3 - (1.07 \cdot 18.9)$

$x_{NMHCE} = 160.71$ μmol/mol

[79 FR 23805, Apr. 28, 2014, as amended at 81 FR 74187, Oct. 25, 2016]

EFFECTIVE DATE NOTE: At 86 FR 34567, June 29, 2021, § 1065.665 was amended, effective July 29, 2021.

§ 1065.667 Dilution air background emission correction.

(a) To determine the mass of background emissions to subtract from a diluted exhaust sample, first determine the total flow of dilution air, n_{dil}, over the test interval. This may be a measured quantity or a calculated quantity. Multiply the total flow of dilution air by the mean mole fraction (*i.e.*, concentration) of a background emission. This may be a time-weighted mean or a flow-weighted mean (*e.g.*, a proportionally sampled background). Finally, multiply by the molar mass, M, of the associated gaseous emission constituent. The product of n_{dil} and the mean molar concentration of a background emission and its molar mass, M, is the total background emission mass, m. In the case of PM, where the mean PM concentration is already in units of mass per mole of sample, $\bar{M}_{PM}$, multiply it by the total amount of dilution air flow, and the result is the total background mass of PM, m_{PM}. Subtract total background mass from total mass to correct for background emissions.

(b) You may determine the total flow of dilution air by a direct flow measurement.

(c) You may determine the total flow of dilution air by subtracting the calculated raw exhaust molar flow as described in § 1065.655(g) from the measured dilute exhaust flow. This may be done by totaling continuous calculations or by using batch results.

(d) You may determine the total flow of dilution air from the measured dilute exhaust flow and a chemical balance of the fuel, intake air, and dilute exhaust as described in § 1065.655. For this option, the molar flow of dilution air is calculated by multiplying the dilute exhaust flow by the mole fraction of dilution gas to dilute exhaust, $x_{dil/exh}$, from the dilute chemical balance. This may be done by totaling continuous calculations or by using batch results. For example, to use batch results, the total flow of dilution air is calculated by multiplying the total flow of diluted exhaust, n_{dexh}, by the flow-weighted mean mole fraction of dilution air in diluted exhaust, $\bar{x}_{dil/exh}$. Calculate $\bar{x}_{dil/exh}$ using flow-weighted mean concentrations of emissions in the chemical balance, as described in § 1065.655. The chemical balance in § 1065.655 assumes that your engine operates stoichiometrically, even if it is a lean-burn engine, such as a compression-ignition engine. Note that for lean-burn engines this assumption could result in an error in emission calculations. This error could occur because the chemical balance in § 1065.655 treats excess air passing through a lean-burn engine as if it was dilution air. If an emission concentration expected at the standard is about 100 times its dilution air background concentration, this error is negligible. However, if an emission concentration expected at the standard is similar to its background concentration, this error could be significant. If this error might affect your ability to show that your engines comply with applicable standards, we recommend that you either determine the total flow of dilution air using one of the more accurate methods in paragraph (b) or (c) of this section, or remove background emissions from dilution air by HEPA filtration, chemical adsorption, or catalytic scrubbing. You might also consider using a partial-flow dilution technique such as a bag mini-diluter, which uses purified air as the dilution air.

(e) The following is an example of using the flow-weighted mean fraction of dilution air in diluted exhaust, $\bar{x}_{dil/exh}$, and the total mass of background emissions calculated using the total flow of diluted exhaust, n_{dexh}, as described in § 1065.650(c):

$$m_{\text{bkgnd}} = \overline{x}_{\text{dil/exh}} \cdot m_{\text{bkgnddexh}}$$

Eq. 1065.667-1

$$m_{\text{bkgnddexh}} = M \cdot \overline{x}_{\text{bkgnd}} \cdot n_{\text{dexh}}$$

Eq. 1065.667-2

Example:
M_{NOx} = 46.0055 g/mol
$\bar{x}_{\text{bkgnd}}$ = 0.05 µmol/mol = $0.05 \cdot 10^{-6}$ mol/mol
n_{dexh} = 23280.5 mol
$\bar{x}_{\text{dil/exh}}$ = 0.843 mol/mol
$\text{m}_{\text{bkgndNOxdexh}} = 46.0055 \cdot 0.05 \cdot 10^{-6} \cdot 23280.5$
$m_{\text{bkgndNOxdexh}}$ = 0.0536 g
$m_{\text{bkgndNOx}} = 0.843 \cdot 0.0536$
m_{bkgndNOx} = 0.0452 g

(f) The following is an example of using the fraction of dilution air in diluted exhaust, $x_{\text{dil/exh}}$, and the mass rate of background emissions calculated using the flow rate of diluted exhaust, $\dot{n}_{\text{dexh}}$, as described in § 1065.650(c):

$$\dot{m}_{\text{bkgnd}} = x_{\text{dil/exh}} \cdot \dot{m}_{\text{bkgnddexh}}$$

Eq. 1065.667-3

$$\dot{m}_{\text{bkgnddexh}} = M \cdot x_{\text{bkgnd}} \cdot \dot{n}_{\text{dexh}}$$

Eq. 1065.667-4

Example:
M_{NOx} = 46.0055 g/mol
x_{bkgnd} = 0.05 µmol/mol = $0.05 \cdot 10^{-6}$ mol/mol
$\dot{n}_{\text{dexh}}$ = 23280.5 mol/s
$x_{\text{dil/exh}}$ = 0.843 mol/mol
$\dot{m}_{\text{bkgndNOxdexh}} = 46.0055 \cdot 0.05 \cdot 10^{-6} \cdot 23280.5$
$\dot{m}_{\text{bkgndNOxdexh}}$ = 0.0536 g/hr
$\dot{m}_{\text{bkgndNOx}} = 0.843 \cdot 0.0536$
$\dot{m}_{\text{bkgndNOx}}$ = 0.0452 g/hr

[76 FR 57465, Sept. 15, 2011, as amended at 81 FR 74188, Oct. 25, 2016]

EFFECTIVE DATE NOTE: At 86 FR 34567, June 29, 2021, § 1065.667 was amended, effective July 29, 2021.

§ 1065.670 NO_X intake-air humidity and temperature corrections.

See the standard-setting part to determine if you may correct NO_X emissions for the effects of intake-air humidity or temperature. Use the NO_X intake-air humidity and temperature corrections specified in the standard-setting part instead of the NO_X intake-air humidity correction specified in this part 1065. If the standard-setting part does not prohibit correcting NO_X emissions for intake-air humidity according to this part 1065, correct NO_X concentrations for intake-air humidity as described in this section. See § 1065.650(c)(1) for the proper sequence for applying the NO_X intake-air humidity and temperature corrections. You may use a time-weighted mean combustion air humidity to calculate this correction if your combustion air humidity remains within a tolerance of ±0.0025 mol/mol of the mean value over

the test interval. For intake-air humidity correction, use one of the following approaches:

(a) For compression-ignition engines, correct for intake-air humidity using the following equation:

$$x_{\mathrm{NOxcor}} = x_{\mathrm{NOxuncor}} \cdot \left(9.953 \cdot x_{\mathrm{H20}} + 0.832\right) \qquad \text{Eq. 1065.670-1}$$

Example:
x_{NOxuncor} = 700.5 μmol/mol
x_{H2O} = 0.022 mol/mol
x_{NOxcor} = 700.5 · (9.953 · 0.022 + 0.832)
x_{NOxcor} = 736.2 μmol/mol

(b) For spark-ignition engines, correct for intake-air humidity using the following equation:

$$x_{\mathrm{NOxcor}} = x_{\mathrm{NOxuncor}} \cdot \left(18.840 \cdot x_{\mathrm{H20}} + 0.68094\right) \qquad \text{Eq. 1065.670-2}$$

Example:
x_{NOxuncor} = 154.7 μmol/mol
x_{H2O} = 0.022 mol/mol
x_{NOxcor} = 154.7 · (18.840 · 0.022 + 0.68094)
x_{NOxcor} = 169.5 μmol/mol

(c) Develop your own correction, based on good engineering judgment.

[75 FR 23056, Apr. 30, 2010, as amended at 76 FR 57466, Sept. 15, 2011]

§ 1065.672 Drift correction.

(a) *Scope and frequency*. Perform the calculations in this section to determine if gas analyzer drift invalidates the results of a test interval. If drift does not invalidate the results of a test interval, correct that test interval's gas analyzer responses for drift according to this section. Use the drift-corrected gas analyzer responses in all subsequent emission calculations. Note that the acceptable threshold for gas analyzer drift over a test interval is specified in § 1065.550 for both laboratory testing and field testing.

(b) *Correction principles*. The calculations in this section utilize a gas analyzer's responses to reference zero and span concentrations of analytical gases, as determined sometime before and after a test interval. The calculations correct the gas analyzer's responses that were recorded during a test interval. The correction is based on an analyzer's mean responses to reference zero and span gases, and it is based on the reference concentrations of the zero and span gases themselves. Validate and correct for drift as follows:

(c) *Drift validation*. After applying all the other corrections—except drift correction—to all the gas analyzer signals, calculate brake-specific emissions according to § 1065.650. Then correct all gas analyzer signals for drift according to this section. Recalculate brake-specific emissions using all of the drift-corrected gas analyzer signals. Validate and report the brake-specific emission results before and after drift correction according to § 1065.550.

(d) *Drift correction*. Correct all gas analyzer signals as follows:

(1) Correct each recorded concentration, x_i, for continuous sampling or for batch sampling, $\bar{x}$.

(2) Correct for drift using the following equation:

$$x_{\mathrm{idriftcorrected}} = x_{\mathrm{refzero}} + \left(x_{\mathrm{refspan}} - x_{\mathrm{refzero}}\right) \cdot \frac{2x_{\mathrm{i}} - \left(x_{\mathrm{prezero}} + x_{\mathrm{postzero}}\right)}{\left(x_{\mathrm{prespan}} + x_{\mathrm{postspan}}\right) - \left(x_{\mathrm{prezero}} + x_{\mathrm{postzero}}\right)}$$

Eq. 1065.672-1

Where:

$x_{idriftcorrected}$ = concentration corrected for drift.

$x_{refzero}$ = reference concentration of the zero gas, which is usually zero unless known to be otherwise.

$x_{refspan}$ = reference concentration of the span gas.

$x_{prespan}$ = pre-test interval gas analyzer response to the span gas concentration.

$x_{postspan}$ = post-test interval gas analyzer response to the span gas concentration.

x_i or $\bar{x}$ = concentration recorded during test, before drift correction.

$x_{prezero}$ = pre-test interval gas analyzer response to the zero gas concentration.

$x_{postzero}$ = post-test interval gas analyzer response to the zero gas concentration.

Example:

$x_{refzero}$ = 0 μmol/mol

$x_{refspan}$ = 1800.0 μmol/mol

$x_{prespan}$ = 1800.5 μmol/mol

$x_{postspan}$ = 1695.8 μmol/mol

x_i or $\bar{x}$ = 435.5 μmol/mol

$x_{prezero}$ = 0.6 μmol/mol

$x_{postzero}$ = −5.2 μmol/mol

$$x_{idriftcorrected} = 0 + (1800.0 - 0) \cdot \frac{2 \cdot 435.5 - (0.6 + (-5.2))}{(1800.5 + 1695.8) - (0.6 + (-5.2))}$$

$x_{idriftcorrected}$ = 450.2 μmol/mol

(3) For any pre-test interval concentrations, use concentrations determined most recently before the test interval. For some test intervals, the most recent pre-zero or pre-span might have occurred before one or more previous test intervals.

(4) For any post-test interval concentrations, use concentrations determined most recently after the test interval. For some test intervals, the most recent post-zero or post-span might have occurred after one or more subsequent test intervals.

(5) If you do not record any pre-test interval analyzer response to the span gas concentration, $x_{prespan}$, set $x_{prespan}$ equal to the reference concentration of the span gas:

$x_{prespan} = x_{refspan}$.

(6) If you do not record any pre-test interval analyzer response to the zero gas concentration, $x_{prezero}$, set $x_{prezero}$ equal to the reference concentration of the zero gas:

$x_{prezero} = x_{refzero}$.

(7) Usually the reference concentration of the zero gas, $x_{refzero}$, is zero: $x_{refzero}$ = 0 μmol/mol. However, in some cases you might know that $x_{refzero}$ has a non-zero concentration. For example, if you zero a CO_2 analyzer using ambient air, you may use the default ambient air concentration of CO_2, which is 375 μmol/mol. In this case, $x_{refzero}$ = 375 μmol/mol. Note that when you zero an analyzer using a non-zero $x_{refzero}$, you must set the analyzer to output the actual $x_{refzero}$ concentration. For example, if $x_{refzero}$ = 375 μmol/mol, set the analyzer to output a value of 375 μmol/mol when the zero gas is flowing to the analyzer.

[70 FR 40516, July 13, 2005, as amended at 74 FR 8427, Feb. 24, 2009; 75 FR 23056, Apr. 30, 2010]

§ 1065.675 CLD quench verification calculations.

Perform CLD quench-check calculations as follows:

(a) Perform a CLD analyzer quench verification test as described in § 1065.370.

(b) Estimate the maximum expected mole fraction of water during emission testing, x_{H2Oexp}. Make this estimate where the humidified NO span gas was introduced in § 1065.370(e)(6). When estimating the maximum expected mole fraction of water, consider the maximum expected water content in combustion air, fuel combustion products, and dilution air (if applicable). If you introduced the humidified NO span gas into the sample system upstream of a sample dryer during the verification test, you need not estimate the maximum expected mole fraction of water and you must set x_{H2Oexp} equal to $x_{H2Omeas}$.

(c) Estimate the maximum expected CO_2 concentration during emission testing, x_{CO2exp}. Make this estimate at the sample system location where the

blended NO and CO_2 span gases are introduced according to § 1065.370(d)(10). When estimating the maximum expected CO_2 concentration, consider the maximum expected CO_2 content in fuel combustion products and dilution air.

(d) Calculate quench as follows:

$$quench = \left(\left(\frac{\frac{x_{NOwet}}{1 - x_{H2Omeas}}}{x_{NOdry}} - 1 \right) \cdot \frac{x_{H2Oexp}}{x_{H2Omeas}} + \left(\frac{x_{NOmeas}}{x_{NOact}} - 1 \right) \cdot \frac{x_{CO2exp}}{x_{CO2act}} \right) \cdot 100\ \%$$

Eq. 1065.675-1

Where:

quench = amount of CLD quench.

x_{NOdry} = concentration of NO upstream of a bubbler, according to § 1065.370(e)(4).

x_{NOwet} = measured concentration of NO downstream of a bubbler, according to § 1065.370(e)(9).

x_{H2Oexp} = maximum expected mole fraction of water during emission testing, according to paragraph (b) of this section.

$x_{H2Omeas}$ = measured mole fraction of water during the quench verification, according to § 1065.370(e)(7).

x_{NOmeas} = measured concentration of NO when NO span gas is blended with CO_2 span gas, according to § 1065.370(d)(10).

x_{NOact} = actual concentration of NO when NO span gas is blended with CO_2 span gas, according to § 1065.370(d)(11) and calculated according to Eq. 1065.675–2.

x_{CO2exp} = maximum expected concentration of CO_2 during emission testing, according to paragraph (c) of this section.

x_{CO2act} = actual concentration of CO_2 when NO span gas is blended with CO_2 span gas, according to § 1065.370(d)(9).

$$x_{NOact} = \left(1 - \frac{x_{CO2act}}{x_{CO2span}} \right) \cdot x_{NOspan}$$

Eq. 1065.675-2

Where:

x_{NOspan} = The NO span gas concentration input to the gas divider, according to § 1065.370(d)(5).

$x_{CO2span}$ = the CO_2 span gas concentration input to the gas divider, according to § 1065.370(d)(4).

Example:

x_{NOdry} = 1800.0 μmol/mol
x_{NOwet} = 1739.6 μmol/mol
x_{H2Oexp} = 0.030 mol/mol
$x_{H2Omeas}$ = 0.030 mol/mol
x_{NOmeas} = 1515.2 μmol/mol
x_{NOspan} = 3001.6 μmol/mol
x_{CO2exp} = 3.2%
$x_{CO2span}$ = 6.1%
x_{CO2act} = 2.98%

$$x_{\mathrm{NOact}} = \left(1 - \frac{2.98}{6.1}\right) \cdot 3001.6 = 1535.24459 \ \mu\mathrm{mol/mol}$$

$$quench = \left(\left(\frac{\frac{1739.6}{1-0.030}}{1800.0} - 1\right) \cdot \frac{0.030}{0.030} + \left(\frac{1515.2}{1535.24459} - 1\right) \cdot \frac{3.2}{2.98}\right) \cdot 100\ \%$$

$quench = (-0.0036655 - 0.014020171) \cdot 100\% = -1.7685671\%$

[73 FR 59340, Oct. 8, 2008, as amended at 76 FR 57466, Sept. 15, 2011; 81 FR 74188, Oct. 25, 2016]

EFFECTIVE DATE NOTE: At 86 FR 34568, June 29, 2021, § 1065.675 was amended, effective July 29, 2021.

§ 1065.680 Adjusting emission levels to account for infrequently regenerating aftertreatment devices.

This section describes how to calculate and apply emission adjustment factors for engines using aftertreatment technology with infrequent regeneration events that may occur during testing. These adjustment factors are typically calculated based on measurements conducted for the purposes of engine certification, and then used to adjust the results of testing related to demonstrating compliance with emission standards. For this section, ''regeneration'' means an intended event during which emission levels change while the system restores aftertreatment performance. For example, exhaust gas temperatures may increase temporarily to remove sulfur from adsorbers or to oxidize accumulated particulate matter in a trap. Also, ''infrequent'' refers to regeneration events that are expected to occur on average less than once over a transient or ramped-modal duty cycle, or on average less than once per mode in a discrete-mode test.

(a) Apply adjustment factors based on whether there is active regeneration during a test segment. The test segment may be a test interval or a full duty cycle, as described in paragraph (b) of this section. For engines subject to standards over more than one duty cycle, you must develop adjustment factors under this section for each separate duty cycle. You must be able to identify active regeneration in a way that is readily apparent during all testing. All adjustment factors for regeneration are additive.

(1) If active regeneration does not occur during a test segment, apply an upward adjustment factor, *UAF*, that will be added to the measured emission rate for that test segment. Use the following equation to calculate *UAF:*

$$UAF_{[\mathrm{cycle}]} = EF_{\mathrm{A}[\mathrm{cycle}]} - EF_{\mathrm{L}[\mathrm{cycle}]}$$

Eq. 1065.680-1

Where:

$EF_{\mathrm{A}[\mathrm{cycle}]}$ = the average emission factor over the test segment as determined in paragraph (a)(4) of this section.

$EF_{\mathrm{L}[\mathrm{cycle}]}$ = measured emissions over a complete test segment in which active regeneration does not occur.

Example:

EF_{ARMC} = 0.15 g/kW·hr

EF_{LRMC} = 0.11 g/kW·hr

$UAF_{RMC} = 0.15 - 0.11 = 0.04$ g/kW·hr

(2) If active regeneration occurs or starts to occur during a test segment, apply a downward adjustment factor, *DAF*, that will be subtracted from the measured emission rate for that test segment. Use the following equation to calculate *DAF:*

$$DAF_{[cycle]} = EF_{H[cycle]} - EF_{A[cycle]}$$

Eq. 1065.680-2

Where:

$EF_{H[cycle]}$ = measured emissions over the test segment from a complete regeneration event, or the average emission rate over multiple complete test segments with regeneration if the complete regeneration event lasts longer than one test segment.

Example:

$EF_{ARMC} = 0.15$ g/kW·hr

$EF_{HRMC} = 0.50$ g/kW·hr

$DAF_{RMC} = 0.50 - 0.15 = 0.35$ g/kW·hr

(3) Note that emissions for a given pollutant may be lower during regeneration, in which case EF_L would be greater than EF_H, and both *UAF* and *DAF* would be negative.

(4) Calculate the average emission factor, EF_A, as follows:

$$EF_{A[cycle]} = F_{[cycle]} \cdot EF_{H[cycle]} + (1.00 - F_{[cycle]}) \cdot EF_{L[cycle]}$$

Eq. 1065.680-3

Where:

$F_{[cycle]}$ = the frequency of the regeneration event during the test segment, expressed in terms of the fraction of equivalent test segments during which active regeneration occurs, as described in paragraph (a)(5) of this section.

Example:

$F_{RMC} = 0.10$

$EF_{ARMC} = 0.10 \cdot 0.50 + (1.00 - 0.10) \cdot 0.11 = 0.15$ g/kW·hr

(5) The frequency of regeneration, *F*, generally characterizes how often a regeneration event occurs within a series of test segments. Determine *F* using the following equation, subject to the provisions of paragraph (a)(6) of this section:

$$F_{[cycle]} = \frac{i_{r[cycle]}}{i_{f[cycle]} + i_{r[cycle]}}$$

Eq. 1065.680-4

Where:

$i_{r[cycle]}$ = the number of successive test segments required to complete an active regeneration, rounded up to the next whole number.

$i_{f[cycle]}$ = the number of test segments from the end of one complete regeneration event to the start of the next active regeneration, without rounding.

Example:

$i_{rRMC} = 2$

$i_{fRMC} = 17.86$

$$F_{\mathrm{RMC}} = \frac{2}{17.86 + 2} = 0.10$$

(6) Use good engineering judgment to determine i_r and i_f, as follows:

(i) For engines that are programmed to regenerate after a specific time interval, you may determine the duration of a regeneration event and the time between regeneration events based on the engine's design parameters. For other engines, determine these values based on measurements from in-use operation or from running repetitive duty cycles in a laboratory.

(ii) For engines subject to standards over multiple duty cycles, such as for transient and steady-state testing, apply this same calculation to determine a value of F for each duty cycle.

(iii) Consider an example for an engine that is designed to regenerate its PM filter 500 minutes after the end of the last regeneration event, with the regeneration event lasting 30 minutes. If the RMC takes 28 minutes, $i_{\mathrm{rRMC}} = 2$ ($30 \div 28 = 1.07$, which rounds up to 2), and $i_{\mathrm{fRMC}} = 500 \div 28 = 17.86$.

(b) Develop adjustment factors for different types of testing as follows:

(1) *Discrete-mode testing*. Develop separate adjustment factors for each test mode (test interval) of a discrete-mode test. When measuring EF_{H}, if a regeneration event has started but is not complete when you reach the end of the sampling time for a test interval, extend the sampling period for that test interval until the regeneration event is complete.

(2) *Ramped-modal and transient testing*. Develop a separate set of adjustment factors for an entire ramped-modal cycle or transient duty cycle. When measuring EF_{H}, if a regeneration event has started but is not complete when you reach the end of the duty cycle, start the next repeat test as soon as possible, allowing for the time needed to complete emission measurement and installation of new filters for PM measurement; in that case EF_{H} is the average emission level for the test segments that included regeneration.

(3) *Accounting for cold-start measurements*. For engines subject to cold-start testing requirements, incorporate cold-start operation into your analysis as follows:

(i) Determine the frequency of regeneration, F, in a way that incorporates the impact of cold-start operation in proportion to the cold-start weighting factor specified in the standard-setting part. You may use good engineering judgment to determine the effect of cold-start operation analytically.

(ii) Treat cold-start testing and hot-start testing together as a single test segment for adjusting measured emission results under this section. Apply the adjustment factor to the composite emission result.

(iii) You may apply the adjustment factor only to the hot-start test result if your aftertreatment technology does not regenerate during cold operation as represented by the cold-start transient duty cycle. If we ask for it, you must demonstrate this by engineering analysis or by test data.

(c) If an engine has multiple regeneration strategies, determine and apply adjustment factors under this section separately for each type of regeneration.

[81 FR 74189, Oct. 25, 2016]

§ 1065.690 Buoyancy correction for PM sample media.

(a) *General*. Correct PM sample media for their buoyancy in air if you weigh them on a balance. The buoyancy correction depends on the sample media density, the density of air, and the density of the calibration weight used to calibrate the balance. The buoyancy correction does not account for the buoyancy of the PM itself, because the mass of PM typically accounts for only (0.01 to 0.10)% of the total weight. A correction to this small fraction of mass would be at the most 0.010%.

(b) *PM sample media density*. Different PM sample media have different densities. Use the known density of your

sample media, or use one of the densities for some common sampling media, as follows:

(1) For PTFE-coated borosilicate glass, use a sample media density of 2300 kg/m^3.

(2) For PTFE membrane (film) media with an integral support ring of polymethylpentene that accounts for 95% of the media mass, use a sample media density of 920 kg/m^3.

(3) For PTFE membrane (film) media with an integral support ring of PTFE, use a sample media density of 2144 kg/m^3.

(c) *Air density*. Because a PM balance environment must be tightly controlled to an ambient temperature of (22 ±1) °C and humidity has an insignificant effect on buoyancy correction, air density is primarily a function of atmospheric pressure. Therefore you may use nominal constant values for temperature and humidity when determining the air density of the balance environment in Eq. 1065.690–2.

(d) *Calibration weight density*. Use the stated density of the material of your metal calibration weight. The example calculation in this section uses a density of 8000 kg/m^3, but you should know the density of your weight from the calibration weight supplier or the balance manufacturer if it is an internal weight.

(e) *Correction calculation*. Correct the PM sample media for buoyancy using the following equations:

$$m_{\text{cor}} = m_{\text{uncor}} \cdot \left(\frac{1 - \dfrac{\rho_{\text{air}}}{\rho_{\text{weight}}}}{1 - \dfrac{\rho_{\text{air}}}{\rho_{\text{media}}}} \right)$$

Eq. 1065.690-1

Where:

m_{cor} = PM mass corrected for buoyancy.

m_{uncor} = PM mass uncorrected for buoyancy.

ρ_{air} = density of air in balance environment.

ρ_{weight} = density of calibration weight used to span balance.

ρ_{media} = density of PM sample media, such as a filter.

$$\rho_{\text{air}} = \frac{p_{\text{abs}} \cdot M_{\text{mix}}}{R \cdot T_{\text{amb}}}$$

Eq. 1065.690-2

Where:

p_{abs} = absolute pressure in balance environment.

M_{mix} = molar mass of air in balance environment.

R = molar gas constant.

T_{amb} = absolute ambient temperature of balance environment.

Example:

p_{abs} = 99.980 kPa

$T_{sat} = T_{dew}$ = 9.5 °C

Using Eq. 1065.645-1,

p_{H20} = 1.1866 kPa

Using Eq. 1065.645-3,

x_{H2O} = 0.011868 mol/mol

Using Eq. 1065.640-9,

M_{mix} = 28.83563 g/mol

R = 8.314472 J/(mol·K)

T_{amb} = 20 °C

$$\rho_{air} = \frac{99.980 \cdot 28.83563}{8.314472 \cdot 293.15}$$

ρ_{air} = 1.18282 kg/m^3

m_{uncorr} = 100.0000 mg

ρ_{weight} = 8000 kg/m^3

ρ_{media} = 920 kg/m^3

$$m_{cor} = 100.0000 \cdot \left(\frac{1 - \frac{1.18282}{8000}}{1 - \frac{1.18282}{920}} \right)$$

$$m_{cor} = 100.1139 \text{ mg}$$

[70 FR 40516, July 13, 2005, as amended at 73 FR 37339, June 30, 2008; 75 FR 23056, Apr. 30, 2010; 79 FR 23805, Apr. 28, 2014; 81 FR 74191, Oct. 25, 2016]

§ 1065.695 Data requirements.

(a) To determine the information we require from engine tests, refer to the standard-setting part and request from your Designated Compliance Officer the format used to apply for certification or demonstrate compliance. We may require different information for different purposes, such as for certification applications, approval requests for alternate procedures, selective enforcement audits, laboratory audits, production-line test reports, and field-test reports.

(b) See the standard-setting part and § 1065.25 regarding recordkeeping.

(c) We may ask you the following about your testing, and we may ask you for other information as allowed under the Act:

(1) What approved alternate procedures did you use? For example:

(i) Partial-flow dilution for proportional PM.

(ii) CARB test procedures.

(iii) ISO test procedures.

(2) What laboratory equipment did you use? For example, the make, model, and description of the following:

(i) Engine dynamometer and operator demand.

(ii) Probes, dilution, transfer lines, and sample preconditioning components.

(iii) Batch storage media (such as the bag material or PM filter material).

(3) What measurement instruments did you use? For example, the make, model, and description of the following:

(i) Speed and torque instruments.

(ii) Flow meters.

(iii) Gas analyzers.

(iv) PM balance.

(4) When did you conduct calibrations and performance checks and what were the results? For example, the dates and results of the following:

(i) Linearity verification.

(ii) Interference checks.

(iii) Response checks.

(iv) Leak checks.

(v) Flow meter checks.

(5) What engine did you test? For example, the following:

(i) Manufacturer.

(ii) Family name on engine label.

(iii) Model.

(iv) Model year.

(v) Identification number.

(6) How did you prepare and configure your engine for testing? Consider the following examples:

(i) Dates, hours, duty cycle and fuel used for service accumulation.

(ii) Dates and description of scheduled and unscheduled maintenance.

(iii) Allowable pressure range of intake restriction.

(iv) Allowable pressure range of exhaust restriction.

(v) Charge air cooler volume.

(vi) Charge air cooler outlet temperature, specified engine conditions and location of temperature measurement.

(vii) Fuel temperature and location of measurement.

(viii) Any aftertreatment system configuration and description.

(ix) Any crankcase ventilation configuration and description (e.g., open, closed, PCV, crankcase scavenged).

(x) Number and type of preconditioning cycles.

(7) How did you test your engine? For example:

(i) Constant speed or variable speed.

(ii) Mapping procedure (step or sweep).

(iii) Continuous or batch sampling for each emission.

(iv) Raw or dilute sampling; any dilution-air background sampling.

(v) Duty cycle and test intervals.

(vi) Cold-start, hot-start, warmed-up running.

(vii) Absolute pressure, temperature, and dewpoint of intake and dilution air.

(viii) Simulated engine loads, curb idle transmission torque value.

(ix) Warm-idle speed value.

(x) Simulated vehicle signals applied during testing.

(xi) Bypassed governor controls during testing.

(xii) Date, time, and location of test (e.g., dynamometer laboratory identification).

(xiii) Cooling medium for engine and charge air.

(xiv) Operating temperatures of coolant, head, and block.

(xv) Natural or forced cool-down and cool-down time.

(xvi) Canister loading.

(8) How did you validate your testing? For example, results from the following:

(i) Duty cycle regression statistics for each test interval.

(ii) Proportional sampling.

(iii) Drift.

(iv) Reference PM sample media in PM-stabilization environment.

(9) How did you calculate results? For example, results from the following:

(i) Drift correction.

(ii) Noise correction.

(iii) ''Dry-to-wet'' correction.

(iv) NMHC, CH_4, and contamination correction.

(v) NO_X humidity correction.

(vi) Brake-specific emission formulation—total mass divided by total work, mass rate divided by power, or ratio of mass to work.

(vii) Rounding emission results.

(10) What were the results of your testing? For example:

(i) Maximum mapped power and speed at maximum power.

(ii) Maximum mapped torque and speed at maximum torque.

(iii) For constant-speed engines: no-load governed speed.

(iv) For constant-speed engines: test torque.

(v) For variable-speed engines: maximum test speed.

(vi) Speed versus torque map.

(vii) Speed versus power map.

(viii) Brake-specific emissions over the duty cycle and each test interval.

(ix) Brake-specific fuel consumption.

(11) What fuel did you use? For example:

(i) Fuel that met specifications of subpart H of this part.

(ii) Alternate fuel.

(iii) Oxygenated fuel.

(12) How did you field test your engine? For example:

(i) Data from paragraphs (c)(1), (3), (4), (5), and (9) of this section.

(ii) Probes, dilution, transfer lines, and sample preconditioning components.

(iii) Batch storage media (such as the bag material or PM filter material).

(iv) Continuous or batch sampling for each emission.

(v) Raw or dilute sampling; any dilution air background sampling.

(vi) Cold-start, hot-start, warmed-up running.

(vii) Intake and dilution air absolute pressure, temperature, dewpoint.

(viii) Curb idle transmission torque value.

(ix) Warm idle speed value, any enhanced idle speed value.

(x) Date, time, and location of test (e.g., identify the testing laboratory).

(xi) Proportional sampling validation.

(xii) Drift validation.

(xiii) Operating temperatures of coolant, head, and block.

(xiv) Vehicle make, model, model year, identification number.

[70 FR 40516, July 13, 2005, as amended at 73 FR 37339, June 30, 2008; 79 FR 23807, Apr. 28, 2014]

EFFECTIVE DATE NOTE: At 86 FR 34568, June 29, 2021, § 1065.695 was amended, effective July 29, 2021.

Subpart H—Engine Fluids, Test Fuels, Analytical Gases and Other Calibration Standards

§ 1065.701 General requirements for test fuels.

(a) *General*. For all emission measurements, use test fuels that meet the specifications in this subpart, unless the standard-setting part directs otherwise. Section 1065.10(c)(1) does not apply with respect to test fuels. Note that the standard-setting parts generally require that you design your emission controls to function properly when using commercially available fuels, even if they differ from the test fuel. Where we specify multiple grades of a certain fuel type (such as diesel fuel with different sulfur concentrations), see the standard-setting part to determine which grade to use.

(b) *Fuels meeting alternate specifications*. We may allow you to use a different test fuel (such as California Phase 2 gasoline) if it does not affect your ability to show that your engines would comply with all applicable emission standards using the fuel specified in this subpart.

(c) *Fuels not specified in this subpart*. If you produce engines that run on a type of fuel (or mixture of fuels) that we do not specify in this subpart, you must get our written approval to establish the appropriate test fuel. See the standard-setting part for provisions related to fuels and fuel mixtures not specified in this subpart.

(1) For engines designed to operate on a single fuel, we will generally allow you to use the fuel if you show us all the following things are true:

(i) Show that your engines will use only the designated fuel in service.

(ii) Show that this type of fuel is commercially available.

(iii) Show that operating the engines on the fuel we specify would be inappropriate, as in the following examples:

(A) The engine will not run on the specified fuel.

(B) The engine or emission controls will not be durable or work properly when operating with the specified fuel.

(C) The measured emission results would otherwise be substantially unrepresentative of in-use emissions.

(2) For engines that are designed to operate on different fuel types, the provisions of paragraphs (c)(1)(ii) and (iii) of this section apply with respect to each fuel type.

(3) For engines that are designed to operate on different fuel types as well as continuous mixtures of those fuels, we may require you to test with either the worst-case fuel mixture or the most representative fuel mixture, unless the standard-setting part specifies otherwise.

(d) *Fuel specifications*. Specifications in this section apply as follows:

(1) Measure and calculate values as described in the appropriate reference procedure. Record and report final values expressed to at least the same number of decimal places as the applicable limit value. The right-most digit for each limit value is significant unless specified otherwise. For example, for a specified distillation temperature of 60 °C, determine the test fuel's value to at least the nearest whole number.

(2) The fuel parameters specified in this subpart depend on measurement procedures that are incorporated by reference. For any of these procedures, you may instead rely upon the procedures identified in 40 CFR part 1090 for measuring the same parameter. For example, we may identify different reference procedures for measuring gasoline parameters in 40 CFR 1090.1360.

(e) Two-stroke fuel/oil mixing. For two-stroke engines, use a fuel/oil mixture meeting the manufacturer's specifications.

(f) *Service accumulation and field testing fuels*. If we do not specify a service-accumulation or field-testing fuel in the standard-setting part, use an appropriate commercially available fuel such as those meeting minimum specifications from the following table:

TABLE 1 OF § 1065.701—EXAMPLES OF SERVICE-ACCUMULATION AND FIELD-TESTING FUELS

Fuel category	Subcategory	Reference procedure [1]
Diesel	Light distillate and light blends with residual	ASTM D975
	Middle distillate	ASTM D6985

TABLE 1 OF § 1065.701—EXAMPLES OF SERVICE-ACCUMULATION AND FIELD-TESTING FUELS—Continued

Fuel category	Subcategory	Reference procedure [1]
	Biodiesel (B100)	ASTM D6751
Intermediate and residual fuel	All	See § 1065.705
Gasoline	Automotive gasoline	ASTM D4814
	Automotive gasoline with ethanol concentration up to 10 volume %..	ASTM D4814
Alcohol	Ethanol (E51–83)	ASTM D5798
	Methanol (M70–M85)	ASTM D5797
Aviation fuel	Aviation gasoline	ASTM D910
	Gas turbine	ASTM D1655
	Jet B wide cut	ASTM D6615
Gas turbine fuel	General	ASTM D2880

[1] ASTM specifications are incorporated by reference in § 1065.1010.

[70 FR 40516, July 13, 2005, as amended at 73 FR 37339, June 30, 2008; 73 FR 59341, Oct. 8, 2008; 75 FR 23057, Apr. 30, 2010;79 FR 23807, Apr. 28, 2014; 85 FR 78468, Dec. 4, 2020]

EFFECTIVE DATE NOTE: At 86 FR 34568, June 29, 2021, § 1065.701 was amended, effective July 29, 2021.

§ 1065.703 Distillate diesel fuel.

(a) Distillate diesel fuels for testing must be clean and bright, with pour and cloud points adequate for proper engine operation.

(b) There are three grades of #2 diesel fuel specified for use as a test fuel. See the standard-setting part to determine which grade to use. If the standard-setting part does not specify which grade to use, use good engineering judgment to select the grade that represents the fuel on which the engines will operate in use. The three grades are specified in the following table:

TABLE 1 OF § 1065.703—TEST FUEL SPECIFICATIONS FOR DISTILLATE DIESEL FUEL

Property	Unit	Ultra low sulfur	Low sulfur	High sulfur	Reference procedure [a]
Cetane Number		40–50	40–50	40–50	ASTM D613
Distillation range:					
Initial boiling point	°C	171–204	171–204	171–204	ASTM D86
10 pct. point		204–238	204–238	204–238	
50 pct. point		243–282	243–282	243–282	
90 pct. point		293–332	293–332	293–332	
Endpoint		321–366	321–366	321–366	
Gravity	°API	32–37	32–37	32–37	ASTM D4052
Total sulfur	mg/kg	7–15	300–500	800–2500	ASTM D2622, ASTM D5453, or ASTM D7039
Aromatics, min. (Remainder shall be paraffins, naphthenes, and olefins).	g/kg	100	100	100	ASTM D5186
Flashpoint, min.	°C	54	54	54	ASTM D93
Kinematic Viscosity	mm^2/s	2.0–3.2	2.0–3.2	2.0–3.2	ASTM D445

[a] Incorporated by reference, see § 1065.1010. See § 1065.701(d) for other allowed procedures.

(c) You may use the following nonmetallic additives with distillate diesel fuels:

(1) Cetane improver.
(2) Metal deactivator.
(3) Antioxidant, dehazer.
(4) Rust inhibitor.
(5) Pour depressant.
(6) Dye.
(7) Dispersant.
(8) Biocide.

[70 FR 40516, July 13, 2005, as amended at 73 FR 37340, June 30, 2008; 73 FR 59341, Oct. 8, 2008; 75 FR 23057, Apr. 30, 2010; 77 FR 2464, Jan. 18, 2012;79 FR 23807, Apr. 28, 2014; 85 FR 78468, Dec. 4, 2020]

EFFECTIVE DATE NOTE: At 86 FR 34569, June 29, 2021, § 1065.703 was amended, effective July 29, 2021.

§ 1065.705 Residual and intermediate residual fuel.

This section describes the specifications for fuels meeting the definition of residual fuel in 40 CFR 1090.80, including fuels marketed as intermediate fuel. Residual fuels for service accumulation and any testing must meet the following specifications:

(a) The fuel must be a commercially available fuel that is representative of the fuel that will be used by the engine in actual use.

(b) The fuel must be free of used lubricating oil. Demonstrate this by showing that the fuel meets at least one of the following specifications.

(1) Zinc is at or below 15 mg per kg of fuel based on the procedures specified in IP470, IP501, or ISO 8217 (incorporated by reference in § 1065.1010).

(2) Phosphorus is at or below 15 mg per kg of fuel based on the procedures specified in IP500, IP501, or ISO 8217 (incorporated by reference in § 1065.1010).

(3) Calcium is at or below 30 mg per kg of fuel based on the procedures specified in IP470, IP501, or ISO 8217 (incorporated by reference in § 1065.1010).

(c) The fuel must meet the specifications for one of the categories in the following table:

TABLE 1 OF § 1065.705—SERVICE ACCUMULATION AND TEST FUEL SPECIFICATIONS FOR RESIDUAL FUEL

Property	Unit	Category ISO–F–										Reference Procedure[1]
		RMA 30	RMB 30	RMD 80	RME 180	RMF 180	RMG 380	RMH 380	RMK 380	RMH 700	RMK 700	
Density at 15 °C, max	kg/m³	960.0	975.0	980.0	991.0		991.0		1010.0	991.0	1010.0	ISO 3675 or ISO 12185 (see also ISO 8217).
Kinematic viscosity at 50 °C, max.	cSt	30.0		80.0	180.0		380.0		700.0			ISO 3104.
Flash point, min	°C	60		60	60		60		60			ISO 2719 (see also ISO 8217).
Pour point (upper):												ISO 3016.
Winter quality, max	°C	0	24	30	30		30		30			
Summer quality, max		6	24	30	30		30		30			
Carbon residue, max	(kg/kg) %	10		14	15	20	18	22	22			ISO 10370.
Ash, max	(kg/kg) %	0.10		0.10	0.10	0.15	0.15		0.15			ISO 6245.
Water, max	(m³/m³) %	0.5		0.5	0.5		0.5		0.5			ISO 3733.
Sulfur, max	(kg/kg) %	3.50		4.00	4.50		4.50		4.50			ISO 8754 or ISO 14596 (see also ISO 8217).
Vanadium, max	mg/kg	150		350	200	500	300	600	600			ISO 14597 or IP 501 or IP 470 (see also ISO 8217).
Total sediment potential, max	(kg/kg) %	0.10		0.10	0.10		0.10		0.10			ISO 10307–2 (see also ISO 8217).
Aluminum plus silicon, max	mg/kg	80		80	80		80		80			ISO 10478 or IP 501 or IP 470 (see also ISO 8217:2012).

[1] ISO procedures are incorporated by reference in § 1065.1010. See § 1065.701(d) for other allowed procedures.

[79 FR 23808, Apr. 28, 2014, as amended at 85 FR 78468, Dec. 4, 2020]

EFFECTIVE DATE NOTE: At 86 FR 34569, June 29, 2021, § 1065.705 was amended, effective July 29, 2021.

§ 1065.710 Gasoline.

(a) This section specifies test fuel properties for gasoline with ethanol (low-level blend only) and for gasoline without ethanol. Note that the ''fuel type'' for the fuels specified in paragraphs (b) and (c) of this section is considered to be gasoline. In contrast, fuels with higher ethanol concentrations, such as fuel containing 82 percent ethanol, are considered to be ethanol fuels rather than gasoline. We specify some test fuel parameters that apply uniquely for low-temperature testing and for testing at altitudes above 1,219 m. For all other testing, use the test fuel parameters specified for general testing. Unless the standard-setting part specifies otherwise, use the fuel specified in paragraph (c) of this section for general testing.

(b) The following specifications apply for a blended gasoline test fuel that has nominally 10% ethanol (commonly called E10 test fuel):

(1) Prepare the blended test fuel from typical refinery gasoline blending components. You may not use pure compounds, except as follows:

(i) You may use neat ethanol as a blendstock.

(ii) You may adjust the test fuel's vapor pressure by adding butane.

(iii) You may adjust the test fuel's benzene content by adding benzene.

(iv) You may adjust the test fuel's sulfur content by adding sulfur compounds that are representative of those found with in-use fuels.

(2) Table 1 of this section identifies limit values consistent with the units in the reference procedure for each fuel property. These values are generally specified in international units. Values presented in parentheses are for information only. Table 1 follows:

TABLE 1 OF § 1065.710—TEST FUEL SPECIFICATIONS FOR A LOW-LEVEL ETHANOL-GASOLINE BLEND

Property	Unit	Specification			Reference procedure [1]
		General testing	Low-temperature testing	High altitude testing	
Antiknock Index (R + M)/2		87.0—88.4 [2]		87.0 Minimum.	ASTM D2699 and D2700.
Sensitivity (R–M)		7.5 Minimum			ASTM D2699 and D2700.
Dry Vapor Pressure Equivalent (*DVPE*) [3] [4].	kPa (psi)	60.0–63.4 (8.7–9.2)	77.2–81.4 (11.2–11.8)	52.4–55.2 (7.6–8.0)	ASTM D5191.
Distillation [4] 10% evaporated	°C (°F)	49–60 (120–140)	43–54 (110–130)	49–60 (120–140)	ASTM D86.
50% evaporated	°C (°F)	88–99 (190–210).			
90% evaporated	°C (°F)	157–168 (315–335).			
Evaporated final boiling point	°C (°F)	193–216 (380–420).			
Residue	milliliter	2.0 Maximum.			
Total Aromatic Hydrocarbons	volume %	21.0–25.0			ASTM D5769.
C6 Aromatics (benzene)	volume %	0.5–0.7.			
C7 Aromatics (toluene)	volume %	5.2–6.4.			
C8 Aromatics	volume %	5.2–6.4.			
C9 Aromatics	volume %	5.2–6.4.			
C10 + Aromatics	volume %	4.4–5.6.			
Olefins [5]	mass %	4.0–10.0			ASTM D6550.
Ethanol blended	volume %	9.6–10.0			See paragraph (b)(3) of this section.
Ethanol confirmatory [6]	volume %	9.4–10.2			ASTM D4815 or D5599.
Total Content of Oxygenates Other than Ethanol [6].	volume %	0.1 Maximum			ASTM D4815 or D5599.
Sulfur	mg/kg	8.0–11.0			ASTM D2622, D5453 or D7039.
Lead	g/liter	0.0026 Maximum			ASTM D3237.
Phosphorus	g/liter	0.0013 Maximum			ASTM D3231.
Copper Corrosion		No. 1 Maximum			ASTM D130.
Solvent-Washed Gum Content	mg/100 milliliter	3.0 Maximum			ASTM D381.
Oxidation Stability	minute	1000 Minimum			ASTM D525.

[1] ASTM procedures are incorporated by reference in § 1065.1010. See § 1065.701(d) for other allowed procedures.

[2] Octane specifications apply only for testing related to exhaust emissions. For engines or vehicles that require the use of premium fuel, as described in paragraph (d) of this section, the adjusted specification for antiknock index is a minimum value of 91.0; no maximum value applies. All other specifications apply for this high-octane fuel.

[3] Calculate dry vapor pressure equivalent, *DVPE*, based on the measured total vapor pressure, p_T, using the following equation: *DVPE* (kPa) = 0.956 · p_T—2.39 or *DVPE* (psi) = 0.956 · p_T—0.347. *DVPE* is intended to be equivalent to Reid Vapor Pressure using a different test method.

[4] Parenthetical values are shown for informational purposes only.

[5] The reference procedure prescribes measurement of olefin concentration in mass %. Multiply this result by 0.857 and round to the first decimal place to determine the olefin concentration in volume %.

[6] ASTM D5599 prescribes concentration measurements for ethanol and other oxygenates in mass %. Convert results to volume % as specified in Section 14.3 of ASTM D4815.

(3) The ethanol-blended specification in Table 1 of this section is based on the volume % ethanol content of the fuel as determined during blending by the fuel supplier and as stated by the supplier at the time of fuel delivery. Use good engineering judgment to determine the volume % of ethanol based on the volume of each blendstock. We recommend using a flow-based or gravimetric procedure that has an accuracy and repeatability of ±0.1%.

(c) The specifications of this paragraph (c) apply for testing with neat gasoline. This is sometimes called indolene or E0 test fuel. Gasoline for testing must have octane values that represent commercially available fuels for the appropriate application. Test fuel specifications apply as follows:

TABLE 2 OF § 1065.710—TEST FUEL SPECIFICATIONS FOR NEAT (E0) GASOLINE

Property	Unit	Specification		Reference procedure [1]
		General testing	Low-temperature testing	
Distillation Range:				
Evaporated initial boiling point	°C	24–35[2]	24–36	ASTM D86
10% evaporated		49–57	37–48.	
50% evaporated		93–110	82–101.	
90% evaporated		149–163	158–174.	
Evaporated final boiling point		Maximum, 213	Maximum, 212.	
Hydrocarbon composition:				
Olefins	volume %	Maximum, 10	Maximum, 17.5	ASTM D1319
Aromatics		Maximum, 35	Maximum, 30.4.	
Saturates		Remainder	Remainder.	
Lead	g/liter	Maximum, 0.013	Maximum, 0.013	ASTM D3237
Phosphorous	g/liter	Maximum, 0.0013	Maximum, 0.005	ASTM D3231
Total sulfur	mg/kg	Maximum, 80	Maximum, 80	ASTM D2622
Dry vapor pressure equivalent [3]	kPa (psi)	60.0–63.4 [2 4] (8.7–9.2).	77.2–81.4 (11.2–11.8).	ASTM D5191

[1] ASTM procedures are incorporated by reference in § 1065.1010. See § 1065.701(d) for other allowed procedures.

[2] For testing at altitudes above 1219 m, the specified initial boiling point range is (23.9 to 40.6) °C and the specified volatility range is (52.0 to 55.2) kPa ((7.5 to 8.0) psi).

[3] Calculate dry vapor pressure equivalent, *DVPE*, based on the measured total vapor pressure, p_T, in kPa using the following equation: *DVPE* (kPa) = 0.956 · p_T − 2.39 or *DVPE* (psi) = 0.956 · p_T − 0.347. *DVPE* is intended to be equivalent to Reid Vapor Pressure using a different test method.

[4] For testing unrelated to evaporative emissions, the specified range is (55.2 to 63.4) kPa ((8.0 to 9.2) psi).

(d) Use the high-octane gasoline specified in paragraph (b) of this section only for engines or vehicles for which the manufacturer conditions the warranty on the use of premium gasoline.

[79 FR 23809, Apr. 28, 2014, as amended at 80 FR 9119, Feb. 19, 2015]

EFFECTIVE DATE NOTE: At 86 FR 34571, June 29, 2021, § 1065.710 was amended, effective July 29, 2021.

§ 1065.715 Natural gas.

(a) Except as specified in paragraph (b) of this section, natural gas for testing must meet the specifications in the following table:

TABLE 1 OF § 1065.715—TEST FUEL SPECIFICATIONS FOR NATURAL GAS

Property	Value [1]
Methane, CH_4	Minimum, 0.87 mol/mol.
Ethane, C_2H_6	Maximum, 0.055 mol/mol.
Propane, C_3H_8	Maximum, 0.012 mol/mol.

TABLE 1 OF § 1065.715—TEST FUEL SPECIFICATIONS FOR NATURAL GAS—Continued

Property	Value [1]
Butane, C_4H_{10}	Maximum, 0.0035 mol/mol.
Pentane, C_5H_{12}	Maximum, 0.0013 mol/mol.
C_6 and higher	Maximum, 0.001 mol/mol.
Oxygen	Maximum, 0.001 mol/mol.
Inert gases (sum of CO_2 and N_2)	Maximum, 0.051 mol/mol.

[1] Demonstrate compliance with fuel specifications based on the reference procedures in ASTM D1945 (incorporated by reference in § 1065.1010), or on other measurement procedures using good engineering judgment. See § 1065.701(d) for other allowed procedures.

(b) In certain cases you may use test fuel not meeting the specifications in paragraph (a) of this section, as follows:

(1) You may use fuel that your in-use engines normally use, such as pipeline natural gas.

(2) You may use fuel meeting alternate specifications if the standard-setting part allows it.

(3) You may ask for approval to use fuel that does not meet the specifications in paragraph (a) of this section, but only if using the fuel would not adversely affect your ability to demonstrate compliance with the applicable standards.

(c) When we conduct testing using natural gas, we will use fuel that meets the specifications in paragraph (a) of this section.

(d) At ambient conditions, natural gas must have a distinctive odor detectable down to a concentration in air not more than one-fifth the lower flammable limit.

[73 FR 37342, June 30, 2008, as amended at 79 FR 23811, Apr. 28, 2014]

EFFECTIVE DATE NOTE: At 86 FR 34573, June 29, 2021, § 1065.715 was amended, effective July 29, 2021.

§ 1065.720 Liquefied petroleum gas.

(a) Except as specified in paragraph (b) of this section, liquefied petroleum gas for testing must meet the specifications in the following table:

TABLE 1 OF § 1065.720—TEST FUEL SPECIFICATIONS FOR LIQUEFIED PETROLEUM GAS

Property	Value	Reference procedure [1]
Propane, C_3H_8	Minimum, 0.85 m^3/m^3	ASTM D2163.
Vapor pressure at 38 °C	Maximum, 1400 kPa	ASTM D1267or D2598.[2]
Volatility residue (evaporated temperature, 35 °C)	Maximum, −38 °C	ASTM D1837.
Butanes	Maximum, 0.05 m^3/m^3	ASTM D2163.
Butenes	Maximum, 0.02 m^3/m^3	ASTM D2163.
Pentenes and heavier	Maximum, 0.005 m^3/m^3	ASTM D2163.
Propene	Maximum, 0.1 m^3/m^3	ASTM D2163.
Residual matter (residue on evaporation of 100 ml oil stain observation).	Maximum, 0.05 ml pass[3]	ASTM D2158.
Corrosion, copper strip	Maximum, No. 1	ASTM D1838.
Sulfur	Maximum, 80 mg/kg	ASTM D2784.
Moisture content	pass	ASTM D2713.

[1] ASTM procedures are incorporated by reference in § 1065.1010. See § 1065.701(d) for other allowed procedures.
[2] If these two test methods yield different results, use the results from ASTM D1267.
[3] The test fuel must not yield a persistent oil ring when you add 0.3 ml of solvent residue mixture to a filter paper in 0.1 ml increments and examine it in daylight after two minutes.

(b) In certain cases you may use test fuel not meeting the specifications in paragraph (a) of this section, as follows:

(1) You may use fuel that your in-use engines normally use, such as commercial-quality liquefied petroleum gas.

(2) You may use fuel meeting alternate specifications if the standard-setting part allows it.

(3) You may ask for approval to use fuel that does not meet the specifications in paragraph (a) of this section, but only if using the fuel would not adversely affect your ability to demonstrate compliance with the applicable standards.

(c) When we conduct testing using liquefied petroleum gas, we will use

fuel that meets the specifications in paragraph (a) of this section.

(d) At ambient conditions, liquefied petroleum gas must have a distinctive odor detectable down to a concentration in air not more than one-fifth the lower flammable limit.

[73 FR 37342, June 30, 2008, as amended at 79 FR 23811, Apr. 28, 2014]

EFFECTIVE DATE NOTE: At 86 FR 34573, June 29, 2021, § 1065.720 was amended, effective July 29, 2021.

§ 1065.725 High-level ethanol-gasoline blends.

For testing vehicles capable of operating on a high-level ethanol-gasoline blend, create a test fuel as follows:

(a) Add ethanol to an E10 fuel meeting the specifications described in § 1065.710 until the ethanol content of the blended fuel is between 80 and 83 volume %.

(b) You may alternatively add ethanol to a gasoline base fuel with no ethanol if you can demonstrate that such a base fuel blended with the proper amount of ethanol would meet all the specifications for E10 test fuel described in § 1065.710, other than the ethanol content.

(c) The ethanol used for blending must be either denatured fuel ethanol meeting the specifications in 40 CFR 1090.270, or fuel-grade ethanol with no denaturant. Account for the volume of any denaturant when calculating volumetric percentages.

(d) The blended test fuel must have a dry vapor pressure equivalent between 41.5 and 45.1 kPa (6.0 and 6.5 psi) when measured using the procedure specified in § 1065.710. You may add commercial grade butane as needed to meet this specification.

[79 FR 23811, Apr. 28, 2014, as amended at 85 FR 78468, Dec. 4, 2020]

§ 1065.735 Diesel exhaust fluid.

(a) Use commercially available diesel exhaust fluid that represents the product that will be used in your in-use engines.

(b) Diesel exhaust fluid for testing must generally conform to the specifications referenced in the definition of ''diesel exhaust fluid'' in § 1065.1001. Use marine-grade diesel exhaust fluid only for marine engines.

[81 FR 74191, Oct. 25, 2016]

§ 1065.740 Lubricants.

(a) Use commercially available lubricating oil that represents the oil that will be used in your engine in use.

(b) You may use lubrication additives, up to the levels that the additive manufacturer recommends.

§ 1065.745 Coolants.

(a) You may use commercially available antifreeze mixtures or other coolants that will be used in your engine in use.

(b) For laboratory testing of liquid-cooled engines, you may use water with or without rust inhibitors.

(c) For coolants allowed in paragraphs (a) and (b) of this section, you may use rust inhibitors and additives required for lubricity, up to the levels that the additive manufacturer recommends.

§ 1065.750 Analytical gases.

Analytical gases must meet the accuracy and purity specifications of this section, unless you can show that other specifications would not affect your ability to show that you comply with all applicable emission standards.

(a) Subparts C, D, F, and J of this part refer to the following gas specifications:

(1) Use purified gases to zero measurement instruments and to blend with calibration gases. Use gases with contamination no higher than the highest of the following values in the gas cylinder or at the outlet of a zero-gas generator:

(i) 2% contamination, measured relative to the flow-weighted mean concentration expected at the standard. For example, if you would expect a flow-weighted CO concentration of 100.0 μmol/mol, then you would be allowed to use a zero gas with CO contamination less than or equal to 2.000 μmol/mol.

(ii) Contamination as specified in the following table:

TABLE 1 OF § 1065.750—GENERAL SPECIFICATIONS FOR PURIFIED GASES [1]

Constituent	Purified air	Purified N_2
THC (C_1-equivalent)	≤0.05 μmol/mol	≤0.05 μmol/mol.
CO	≤1 μmol/mol	≤1 μmol/mol.
CO_2	≤10 μmol/mol	≤10 μmol/mol.
O_2	0.205 to 0.215 mol/mol	≤2 μmol/mol.
NO_X	≤0.02 μmol/mol	≤0.02 μmol/mol.
N_2O[2]	≤0.02 μmol/mol	≤0.02 μmol/mol.

[1] We do not require these levels of purity to be NIST-traceable.
[2] The N_2O limit applies only if the standard-setting part requires you to report N_2O or certify to an N_2O standard.

(2) Use the following gases with a FID analyzer:

(i) *FID fuel*. Use FID fuel with a stated H_2 concentration of (0.39 to 0.41) mol/mol, balance He or N_2, and a stated total hydrocarbon concentration of 0.05 μmol/mol or less. For GC–FIDs that measure methane (CH_4) using a FID fuel that is balance N_2, perform the CH_4 measurement as described in SAE J1151 (incorporated by reference in § 1065.1010).

(ii) *FID burner air*. Use FID burner air that meets the specifications of purified air in paragraph (a)(1) of this section. For field testing, you may use ambient air.

(iii) *FID zero gas*. Zero flame-ionization detectors with purified gas that meets the specifications in paragraph (a)(1) of this section, except that the purified gas O_2 concentration may be any value. Note that FID zero balance gases may be any combination of purified air and purified nitrogen. We recommend FID analyzer zero gases that contain approximately the expected flow-weighted mean concentration of O_2 in the exhaust sample during testing.

(iv) *FID propane span gas*. Span and calibrate THC FID with span concentrations of propane, C_3H_8. Calibrate on a carbon number basis of one (C_1). For example, if you use a C_3H_8 span gas of concentration 200 μmol/mol, span a FID to respond with a value of 600 μmol/mol. Note that FID span balance gases may be any combination of purified air and purified nitrogen. We recommend FID analyzer span gases that contain approximately the flow-weighted mean concentration of O_2 expected during testing. If the expected O_2 concentration in the exhaust sample is zero, we recommend using a balance gas of purified nitrogen.

(v) *FID CH_4 span gas*. If you always span and calibrate a CH_4 FID with a nonmethane cutter, then span and calibrate the FID with span concentrations of CH_4. Calibrate on a carbon number basis of one (C_1). For example, if you use a CH_4 span gas of concentration 200 μmol/mol, span a FID to respond with a value of 200 μmol/mol. Note that FID span balance gases may be any combination of purified air and purified nitrogen. We recommend FID analyzer span gases that contain approximately the expected flow-weighted mean concentration of O_2 in the exhaust sample during testing. If the expected O_2 concentration in the exhaust sample is zero, we recommend using a balance gas of purified nitrogen.

(3) Use the following gas mixtures, with gases traceable within ±1% of the NIST-accepted value or other gas standards we approve:

(i) CH_4, balance purified air and/or N_2 (as applicable).

(ii) C_2H_6, balance purified air and/or N_2 (as applicable).

(iii) C_3H_8, balance purified air and/or N_2 (as applicable).

(iv) CO, balance purified N_2.

(v) CO_2, balance purified N_2.

(vi) NO, balance purified N_2.

(vii) NO_2, balance purified air.

(viii) O_2, balance purified N_2.

(ix) C_3H_8, CO, CO_2, NO, balance purified N_2.

(x) C_3H_8, CH_4, CO, CO_2, NO, balance purified N_2.

(xi) N_2O, balance purified air and/or N_2 (as applicable).

(xii) CH_4, C_2H_6, balance purified air and/or N_2 (as applicable).

(xiii) CH_4, CH_2O, CH_2O_2, C_2H_2, C_2H_4, C_2H_4O, C_2H_6, C_3H_8, C_3H_6, CH_4O, and C_4H_{10}. You may omit individual gas constituents from this gas mixture. If your gas mixture contains oxygenated

hydrocarbon, your gas mixture must be in balance purified N_2, otherwise you may use balance purified air.

(4) You may use gases for species other than those listed in paragraph (a)(3) of this section (such as methanol in air, which you may use to determine response factors), as long as they are traceable to within ±3% of the NIST-accepted value or other similar standards we approve, and meet the stability requirements of paragraph (b) of this section.

(5) You may generate your own calibration gases using a precision blending device, such as a gas divider, to dilute gases with purified N_2 or purified air. If your gas divider meets the specifications in §1065.248, and the gases being blended meet the requirements of paragraphs (a)(1) and (3) of this section, the resulting blends are considered to meet the requirements of this paragraph (a).

(b) Record the concentration of any calibration gas standard and its expiration date specified by the gas supplier.

(1) Do not use any calibration gas standard after its expiration date, except as allowed by paragraph (b)(2) of this section.

(2) Calibration gases may be relabeled and used after their expiration date as follows:

(i) Alcohol/carbonyl calibration gases used to determine response factors according to subpart I of this part may be relabeled as specified in subpart I of this part.

(ii) Other gases may be relabeled and used after the expiration date only if we approve it in advance.

(c) Transfer gases from their source to analyzers using components that are dedicated to controlling and transferring only those gases. For example, do not use a regulator, valve, or transfer line for zero gas if those components were previously used to transfer a different gas mixture. We recommend that you label regulators, valves, and transfer lines to prevent contamination. Note that even small traces of a gas mixture in the dead volume of a regulator, valve, or transfer line can diffuse upstream into a high-pressure volume of gas, which would contaminate the entire high-pressure gas source, such as a compressed-gas cylinder.

(d) To maintain stability and purity of gas standards, use good engineering judgment and follow the gas standard supplier's recommendations for storing and handling zero, span, and calibration gases. For example, it may be necessary to store bottles of condensable gases in a heated environment.

[70 FR 40516, July 13, 2005, as amended at 73 FR 37343, June 30, 2008; 74 FR 56518, Oct. 30, 2009; 75 FR 68465, Nov. 8, 2010; 76 FR 57467, Sept. 15, 2011; 79 FR 23811, Apr. 28, 2014; 81 FR 74191, Oct. 25, 2016]

EFFECTIVE DATE NOTE: At 86 FR 34574, June 29, 2021, §1065.750 was amended, effective July 29, 2021.

§1065.790 Mass standards.

(a) *PM balance calibration weights*. Use PM balance calibration weights that are certified as NIST-traceable within 0.1% uncertainty. Calibration weights may be certified by any calibration lab that maintains NIST-traceability. Make sure your highest calibration weight has no greater than ten times the mass of an unused PM-sample medium.

(b) *Dynamometer calibration weights*. [Reserved]

[70 FR 40516, July 13, 2005, as amended at 76 FR 57467, Sept. 15, 2011]

EFFECTIVE DATE NOTE: At 86 FR 34574, June 29, 2021, §1065.790 was amended, effective July 29, 2021.

Subpart I—Testing With Oxygenated Fuels

§1065.801 Applicability.

(a) This subpart applies for testing with oxygenated fuels. Unless the standard-setting part specifies otherwise, the requirements of this subpart do not apply for fuels that contain less than 25% oxygenated compounds by volume. For example, you generally do not need to follow the requirements of this subpart for tests performed using a fuel containing 10% ethanol and 90% gasoline, but you must follow these requirements for tests performed using a fuel containing 85% ethanol and 15% gasoline.

(b) Section 1065.805 applies for all other testing that requires measurement of any alcohols or carbonyls.

(c) This subpart specifies sampling procedures and calculations that are different than those used for non-oxygenated fuels. All other test procedures of this part 1065 apply for testing with oxygenated fuels.

§ 1065.805 Sampling system.

(a) Dilute engine exhaust, and use batch sampling to collect proportional flow-weighted dilute samples of the applicable alcohols and carbonyls. You may not use raw sampling for alcohols and carbonyls.

(b) You may collect background samples for correcting dilution air for background concentrations of alcohols and carbonyls.

(c) Maintain sample temperatures within the dilution tunnel, probes, and sample lines high enough to prevent aqueous condensation up to the point where a sample is collected to prevent loss of the alcohols and carbonyls by dissolution in condensed water. Use good engineering judgment to ensure that surface reactions of alcohols and carbonyls do not occur, as surface decomposition of methanol has been shown to occur at temperatures greater than 120 °C in exhaust from methanol-fueled engines.

(d) You may bubble a sample of the exhaust through water to collect alcohols for later analysis. You may also use a photoacoustic analyzer to quantify ethanol and methanol in an exhaust sample as described in § 1065.269.

(e) Sample the exhaust through cartridges impregnated with 2,4-dinitrophenylhydrazine to collect carbonyls for later analysis. If the standard-setting part specifies a duty cycle that has multiple test intervals (such as multiple engine starts or an engine-off soak phase), you may proportionally collect a single carbonyl sample for the entire duty cycle. For example, if the standard-setting part specifies a six-to-one weighting of hot-start to cold-start emissions, you may collect a single carbonyl sample for the entire duty cycle by using a hot-start sample flow rate that is six times the cold-start sample flow rate.

(f) You may sample alcohols or carbonyls using ''California Non-Methane Organic Gas Test Procedures'' (incorporated by reference in § 1065.1010). If you use this method, follow its calculations to determine the mass of the alcohol/carbonyl in the exhaust sample, but follow subpart G of this part for all other calculations (40 CFR part 1066, subpart G, for vehicle testing).

(g) Use good engineering judgment to sample other oxygenated hydrocarbon compounds in the exhaust.

[70 FR 40516, July 13, 2005, as amended at 73 FR 37343, June 30, 2008; 79 FR 23812, Apr. 28, 2014]

§ 1065.845 Response factor determination.

Since FID analyzers generally have an incomplete response to alcohols and carbonyls, determine each FID analyzer's alcohol/carbonyl response factor ($RF_{OHCi[THC\text{-}FID]}$) after FID optimization to subtract those responses from the FID reading. Use the most recently determined alcohol/carbonyl response factors to compensate for alcohol/carbonyl response. You are not required to determine the response factor for a compound unless you will subtract its response to compensate for a response.

(a) You may generate response factors as described in paragraph (b) of this section, or you may use the following default response factors, consistent with good engineering judgment:

TABLE 1 OF § 1065.845—DEFAULT VALUES FOR THC FID RESPONSE FACTOR RELATIVE TO PROPANE ON A C_1-EQUIVALENT BASIS

Compound	Response factor (*RF*)
acetaldehyde	0.50
ethanol	0.75
formaldehyde	0.00
methanol	0.63
propanol	0.85

(b) Determine the alcohol/carbonyl response factors as follows:

(1) Select a C_3H_8 span gas that meets the specifications of § 1065.750. Note that FID zero and span balance gases may be any combination of purified air or purified nitrogen that meets the specifications of § 1065.750. We recommend FID analyzer zero and span

gases that contain approximately the flow-weighted mean concentration of O_2 expected during testing. Record the C_3H_8 concentration of the gas.

(2) Select or prepare an alcohol/carbonyl calibration gas that meets the specifications of §1065.750 and has a concentration typical of the peak concentration expected at the hydrocarbon standard. Record the calibration concentration of the gas.

(3) Start and operate the FID analyzer according to the manufacturer's instructions.

(4) Confirm that the FID analyzer has been calibrated using C_3H_8. Calibrate on a carbon number basis of one (C_1). For example, if you use a C_3H_8 span gas of concentration 200 μmol/mol, span the FID to respond with a value of 600 μmol/mol.

(5) Zero the FID. Note that FID zero and span balance gases may be any combination of purified air or purified nitrogen that meets the specifications of §1065.750. We recommend FID analyzer zero and span gases that contain approximately the flow-weighted mean concentration of O_2 expected during testing.

(6) Span the FID with the C_3H_8 span gas that you selected under paragraph (a)(1) of this section.

(7) Introduce at the inlet of the FID analyzer the alcohol/carbonyl calibration gas that you selected under paragraph (a)(2) of this section.

(8) Allow time for the analyzer response to stabilize. Stabilization time may include time to purge the analyzer and to account for its response.

(9) While the analyzer measures the alcohol/carbonyl concentration, record 30 seconds of sampled data. Calculate the arithmetic mean of these values.

(10) Divide the mean measured concentration by the recorded span concentration of the alcohol/carbonyl calibration gas on a C_1-equivalent basis. The result is the FID analyzer's response factor for alcohol/carbonyl, $RF_{OHCi[THC\text{-}FID]}$ on a C_1-equivalent basis.

(c) Alcohol/carbonyl calibration gases must remain within ±2% of the labeled concentration. You must demonstrate the stability based on a quarterly measurement procedure with a precision of ±2% percent or another method that we approve. Your measurement procedure may incorporate multiple measurements. If the true concentration of the gas changes deviates by more than ±2%, but less than ±10%, the gas may be relabeled with the new concentration.

[79 FR 23812, Apr. 28, 2014, as amended at 79 FR 36658, June 30, 2014]

§ 1065.850 Calculations.

Use the calculations specified in §1065.665 to determine THCE or NMHCE and the calculations specified in 40 CFR 1066.635 to determine NMOG.

[79 FR 23813, Apr. 28, 2014]

Subpart J—Field Testing and Portable Emission Measurement Systems

§ 1065.901 Applicability.

(a) *Field testing.* This subpart specifies procedures for field-testing engines to determine brake-specific emissions using portable emission measurement systems (PEMS). These procedures are designed primarily for in-field measurements of engines that remain installed in vehicles or equipment in the field. Field-test procedures apply to your engines only as specified in the standard-setting part.

(b) *Laboratory testing.* You may use PEMS for any testing in a laboratory or similar environment without restriction or prior approval if the PEMS meets all applicable specifications for laboratory testing. You may also use PEMS for any testing in a laboratory or similar environment if we approve it in advance, subject to the following provisions:

(1) Follow the laboratory test procedures specified in this part 1065, according to §1065.905(e).

(2) Do not apply any PEMS-related field-testing adjustments or measurement allowances to laboratory emission results or standards.

(3) Do not use PEMS for laboratory measurements if it prevents you from demonstrating compliance with the applicable standards. Some of the PEMS requirements in this part 1065 are less stringent than the corresponding laboratory requirements. Depending on actual PEMS performance, you might

therefore need to account for some additional measurement uncertainty when using PEMS for laboratory testing. If we ask, you must show us by engineering analysis that any additional measurement uncertainty due to your use of PEMS for laboratory testing is offset by the extent to which your engine's emissions are below the applicable standards. For example, you might show that PEMS versus laboratory uncertainty represents 5% of the standard, but your engine's deteriorated emissions are at least 20% below the standard for each pollutant.

[70 FR 40516, July 13, 2005, as amended at 73 FR 37344, June 30, 2008]

§ 1065.905 General provisions.

(a) *General*. Unless the standard-setting part specifies deviations from the provisions of this subpart, field testing and laboratory testing with PEMS must conform to the provisions of this subpart. Use good engineering judgment when testing with PEMS to ensure proper function of the instruments under test conditions. For example, this may require additional maintenance or calibration for field testing or may require verification after moving the PEMS unit.

(b) *Field-testing scope*. Field testing conducted under this subpart may include any normal in-use operation of an engine.

(c) *Field testing and the standard-setting part*. This subpart J specifies procedures for field-testing various categories of engines. See the standard-setting part for specific provisions for a particular type of engine. Before using this subpart's procedures for field testing, read the standard-setting part to answer at least the following questions:

(1) How many engines must I test in the field?

(2) How many times must I repeat a field test on an individual engine?

(3) How do I select vehicles for field testing?

(4) What maintenance steps may I take before or between tests?

(5) What data are needed for a single field test on an individual engine?

(6) What are the limits on ambient conditions for field testing? Note that the ambient condition limits in § 1065.520 do not apply for field testing. Field testing may occur at any ambient temperature, pressure, and humidity unless otherwise specified in the standard-setting part.

(7) Which exhaust constituents do I need to measure?

(8) How do I account for crankcase emissions?

(9) Which engine and ambient parameters do I need to measure?

(10) How do I process the data recorded during field testing to determine if my engine meets field-testing standards? How do I determine individual test intervals? Note that ''test interval'' is defined in subpart K of this part 1065.

(11) Should I warm up the test engine before measuring emissions, or do I need to measure cold-start emissions during a warm-up segment of in-use operation?

(12) Do any unique specifications apply for test fuels?

(13) Do any special conditions invalidate parts of a field test or all of a field test?

(14) Does any special measurement allowance apply to field-test emission results or standards, based on using PEMS for field-testing versus using laboratory equipment and instruments for laboratory testing?

(15) Do results of initial field testing trigger any requirement for additional field testing or laboratory testing?

(16) How do I report field-testing results?

(d) *Field testing and this part 1065*. Use the following specifications for field testing:

(1) Use the applicability and general provisions of subpart A of this part.

(2) Use equipment specifications in § 1065.101 and in the sections from § 1065.140 to the end of subpart B of this part, with the exception of §§ 1065.140(e)(1) and (4), 1065.170(c)(1)(vi), and 1065.195(c). Section 1065.910 identifies additional equipment that is specific to field testing.

(i) For PM samples, configure dilution systems as follows:

(A) Use good engineering judgment to control dilution air temperature. If you choose to directly and actively control dilution air temperature, set the temperature to 25 °C.

(B) Control sample temperature to a (32 to 62) °C tolerance, as measured anywhere within 20 cm upstream or downstream of the PM storage media (such as a filter or oscillating crystal), where the tolerance applies only during sampling.

(C) Maintain filter face velocity to a (5 to 100) cm/s tolerance for flow-through media. Compliance with this provision can be verified by engineering analysis. This provision does not apply for non-flow-through media.

(ii) For inertial PM balances, there is no requirement to control the stabilization environment temperature or dewpoint.

(3) Use measurement instruments in subpart C of this part, except as specified in § 1065.915.

(4) Use calibrations and verifications in subpart D of this part, except as specified in § 1065.920. Section 1065.920 also specifies additional calibrations and verifications for field testing.

(5) Use the provisions of the standard-setting part for selecting and maintaining engines in the field instead of the specifications in subpart E of this part.

(6) Use the procedures in §§ 1065.930 and 1065.935 to start and run a field test. If you use a gravimetric balance for PM, weigh PM samples according to §§ 1065.590 and 1065.595.

(7) Use the calculations in subpart G of this part to calculate emissions over each test interval. Note that ''test interval'' is defined in subpart K of this part 1065, and that the standard setting part indicates how to determine test intervals for your engine.

Section 1065.940 specifies additional calculations for field testing. Use any calculations specified in the standard-setting part to determine if your engines meet the field-testing standards. The standard-setting part may also contain additional calculations that determine when further field testing is required.

(8) Use a typical in-use fuel meeting the specifications of § 1065.701(d).

(9) Use the lubricant and coolant specifications in §§ 1065.740 and 1065.745.

(10) Use the analytical gases and other calibration standards in § 1065.750 and § 1065.790.

(11) If you are testing with oxygenated fuels, use the procedures specified for testing with oxygenated fuels in subpart I of this part.

(12) Apply the definitions and reference materials in subpart K of this part.

(e) *Laboratory testing using PEMS.* You may use PEMS for testing in a laboratory as described in § 1065.901(b). Use the following procedures and specifications when using PEMS for laboratory testing:

(1) Use the applicability and general provisions of subpart A of this part.

(2) Use equipment specifications in subpart B of this part. Section 1065.910 specifies additional equipment specific to testing with PEMS.

(3) Use measurement instruments in subpart C of this part, except as specified in § 1065.915.

(4) Use calibrations and verifications in subpart D of this part, except as specified in § 1065.920. Section 1065.920 also specifies additional calibration and verifications for PEMS.

(5) Use the provisions of § 1065.401 for selecting engines for testing. Use the provisions of subpart E of this part for maintaining engines, except as specified in the standard-setting part.

(6) Use the procedures in subpart F of this part and in the standard-setting part to start and run a laboratory test.

(7) Use the calculations in subpart G of this part to calculate emissions over the applicable duty cycle. Section 1065.940 specifies additional calculations for testing with PEMS.

(8) Use a fuel meeting the specifications of subpart H of this part, as specified in the standard-setting part.

(9) Use the lubricant and coolant specifications in §§ 1065.740 and 1065.745.

(10) Use the analytical gases and other calibration standards in §§ 1065.750 and 1065.790.

(11) If you are testing with oxygenated fuels, use the procedures specified for testing with oxygenated fuels in subpart I of this part.

(12) Apply the definitions and reference materials in subpart K of this part.

(f) *Summary*. The following table summarizes the requirements of paragraphs (d) and (e) of this section:

TABLE 1 OF § 1065.905—SUMMARY OF TESTING REQUIREMENTS SPECIFIED OUTSIDE OF THIS SUBPART J

Subpart	Applicability for field testing [1]	Applicability for laboratory or similar testing with PEMS without restriction [1]	Applicability for laboratory or similar testing with PEMS with restrictions [1]
A: Applicability and general provisions.	Use all	Use all	Use all.
B: Equipment for testing	Use § 1065.101 and § 1065.140 through the end of subpart B, except § 1065.140(e)(1) and (4), § 1065.170(c)(1)(vi), and § 1065.195(c). § 1065.910 specifies equipment specific to field testing.	Use all	Use all. § 1065.910 specifies equipment specific to laboratory testing with PEMS.
C: Measurement instruments.	Use all. § 1065.915 allows deviations	Use all except § 1065.295(c).	Use all except § 1065.295(c). § 1065.915 allows deviations.
D: Calibrations and verifications.	Use all except § 1065.308 and § 1065.309. § 1065.920 allows deviations, but also has additional specifications.	Use all	Use all. § 1065.920 allows deviations, but also has additional specifications.
E: Test engine selection, maintenance, and durability.	Do not use. Use standard-setting part	Use all	Use all.
F: Running an emission test in the laboratory.	Use §§ 1065.590 and 1065.595 for PM § 1065.930 and § 1065.935 to start and run a field test.	Use all	Use all.
G: Calculations and data requirements.	Use all. § 1065.940 has additional calculation instructions.	Use all	Use all. § 1065.940 has additional calculation instructions.
H: Fuels, engine fluids, analytical gases, and other calibration materials.	Use all	Use all	Use all.
I: Testing with oxygenated fuels.	Use all	Use all	Use all.
K: Definitions and reference materials.	Use all	Use all	Use all.

[1] Refer to paragraphs (d) and (e) of this section for complete specifications.

[70 FR 40516, July 13, 2005, as amended at 73 FR 37344, June 30, 2008; 75 FR 68465, Nov. 8, 2010; 79 FR 23813, Apr. 28, 2014]

EFFECTIVE DATE NOTE: At 86 FR 34574, June 29, 2021, § 1065.905 was amended, effective July 29, 2021.

§ 1065.910 PEMS auxiliary equipment for field testing.

For field testing you may use various types of auxiliary equipment to attach PEMS to a vehicle or engine and to power PEMS.

(a) When you use PEMS, you may route engine intake air or exhaust through a flow meter. Route the engine intake air or exhaust as follows:

(1) *Flexible connections.* Use short flexible connectors where necessary.

(i) You may use flexible connectors to enlarge or reduce the pipe diameters to match that of your test equipment.

(ii) We recommend that you use flexible connectors that do not exceed a length of three times their largest inside diameter.

(iii) We recommend that you use four-ply silicone-fiberglass fabric with a temperature rating of at least 315 °C for flexible connectors. You may use connectors with a spring-steel wire helix for support and you may use Nomex™ coverings or linings for durability. You may also use any other nonreactive material with equivalent permeation-resistance and durability, as long as it seals tightly.

(iv) Use stainless-steel hose clamps to seal flexible connectors, or use clamps that seal equivalently.

(v) You may use additional flexible connectors to connect to flow meters.

(2) *Tubing.* Use rigid 300 series stainless steel tubing to connect between flexible connectors. Tubing may be

straight or bent to accommodate vehicle geometry. You may use ''T'' or ''Y'' fittings made of 300 series stainless steel tubing to join multiple connections, or you may cap or plug redundant flow paths if the engine manufacturer recommends it.

(3) *Flow restriction*. Use flow meters, connectors, and tubing that do not increase flow restriction so much that it exceeds the manufacturer's maximum specified value. You may verify this at the maximum exhaust flow rate by measuring pressure at the manufacturer-specified location with your system connected. You may also perform an engineering analysis to verify an acceptable configuration, taking into account the maximum exhaust flow rate expected, the field test system's flexible connectors, and the tubing's characteristics for pressure drops versus flow.

(b) For vehicles or other motive equipment, we recommend installing PEMS in the same location where a passenger might sit. Follow PEMS manufacturer instructions for installing PEMS in cargo spaces, engine spaces, or externally such that PEMS is directly exposed to the outside environment. We recommend locating PEMS where it will be subject to minimal sources of the following parameters:

(1) Ambient temperature changes.

(2) Ambient pressure changes.

(3) Electromagnetic radiation.

(4) Mechanical shock and vibration.

(5) Ambient hydrocarbons—if using a FID analyzer that uses ambient air as FID burner air.

(c) Use mounting hardware as required for securing flexible connectors, ambient sensors, and other equipment. Use structurally sound mounting points such as vehicle frames, trailer hitch receivers, walk spaces, and payload tie-down fittings. We recommend mounting hardware such as clamps, suction cups, and magnets that are specifically designed for your application. We also recommend considering mounting hardware such as commercially available bicycle racks, trailer hitches, and luggage racks where applicable.

(d) Field testing may require portable electrical power to run your test equipment. Power your equipment, as follows:

(1) You may use electrical power from the vehicle, equipment, or vessel, up to the highest power level, such that all the following are true:

(i) The power system is capable of safely supplying power, such that the power demand for testing does not overload the power system.

(ii) The engine emissions do not change significantly as a result of the power demand for testing.

(iii) The power demand for testing does not increase output from the engine by more than 1% of its maximum power.

(2) You may install your own portable power supply. For example, you may use batteries, fuel cells, a portable generator, or any other power supply to supplement or replace your use of vehicle power. You may connect an external power source directly to the vehicle's, vessel's, or equipment's power system; however, during a test interval (such as an NTE event) you must not supply power to the vehicle's power system in excess of 1% of the engine's maximum power.

[73 FR 37344, June 30, 2008, as amended at 75 FR 23058, Apr. 30, 2010]

EFFECTIVE DATE NOTE: At 86 FR 34575, June 29, 2021, § 1065.910 was amended, effective July 29, 2021.

§ 1065.915 PEMS instruments.

(a) *Instrument specifications*. We recommend that you use PEMS that meet the specifications of subpart C of this part. For unrestricted use of PEMS in a laboratory or similar environment, use a PEMS that meets the same specifications as each lab instrument it replaces. For field testing or for testing with PEMS in a laboratory or similar environment, under the provisions of § 1065.905(b), the specifications in the following table apply instead of the specifications in Table 1 of § 1065.205.

TABLE 1 OF § 1065.915—RECOMMENDED MINIMUM PEMS MEASUREMENT INSTRUMENT PERFORMANCE

Measurement	Measured quantity symbol	Rise time, t_{10-90}, and fall time, t_{90-10}	Recording update frequency	Accuracy [1]	Repeatability [1]	Noise [1]
Engine speed transducer	f_n	1 s	1 Hz means	5% of pt. or 1% of max.	2% of pt. or 1% of max.	0.5% of max.
Engine torque estimator, BSFC (This is a signal from an engine's ECM).	T or BSFC	1 s	1 Hz means	8% of pt. or 5% of max.	2% of pt. or 1% of max.	1% of max.
General pressure transducer (not a part of another instrument).	p	5 s	1 Hz	5% of pt. or 5% of max.	2% of pt. or 0.5% of max.	1% of max.
Atmospheric pressure meter	p_{atmos}	50 s	0.1 Hz	250 Pa	200 Pa	100 Pa.
General temperature sensor (not a part of another instrument).	T	5 s	1 Hz	1% of pt. K or 5 K.	0.5% of pt. K or 2 K.	0.5% of max 0.5 K.
General dewpoint sensor	T_{dew}	50 s	0.1 Hz	3 K	1 K	1 K.
Exhaust flow meter	$\dot{n}$	1 s	1 Hz means	5% of pt. or 3% of max.	2% of pt	2% of max.
Dilution air, inlet air, exhaust, and sample flow meters.	$\dot{n}$	1 s	1 Hz means	2.5% of pt. or 1.5% of max.	1.25% of pt. or 0.75% of max.	1% of max.
Continuous gas analyzer	x	5 s	1 Hz	4% of pt. or 4% of meas.	2% of pt. or 2% of meas.	1% of max.
Gravimetric PM balance	m_{PM}			See § 1065.790.	0.5 µg.	
Inertial PM balance	m_{PM}			4% of pt. or 4% of meas.	2% of pt. or 2% of meas.	1% of max.

[1] Accuracy, repeatability, and noise are all determined with the same collected data, as described in § 1065.305, and based on absolute values. ''pt.'' refers to the overall flow-weighted mean value expected at the standard; ''max.'' refers to the peak value expected at the standard over any test interval, not the maximum of the instrument's range; ''meas'' refers to the actual flow-weighted mean measured over any test interval.

(b) *Redundant measurements.* For all PEMS described in this subpart, you may use data from multiple instruments to calculate test results for a single test. If you use redundant systems, use good engineering judgment to use multiple measured values in calculations or to disregard individual measurements. Note that you must keep your results from all measurements, as described in § 1065.25. This requirement applies whether or not you actually use the measurements in your calculations.

(c) *Field-testing ambient effects on PEMS.* We recommend that you use PEMS that are only minimally affected by ambient conditions such as temperature, pressure, humidity, physical orientation, mechanical shock and vibration, electromagnetic radiation, and ambient hydrocarbons. Follow the PEMS manufacturer's instructions for proper installation to isolate PEMS from ambient conditions that affect their performance. If a PEMS is inherently affected by ambient conditions that you cannot control, you may monitor those conditions and adjust the PEMS signals to compensate for the ambient effect. The standard-setting part may also specify the use of one or more field-testing adjustments or measurement allowances that you apply to results or standards to account for ambient effects on PEMS.

(d) *ECM signals.* You may use signals from the engine's electronic control module (ECM) in place of values measured by individual instruments within a PEMS, subject to the following provisions:

(1) *Recording ECM signals.* If your ECM updates a broadcast signal more or less frequently than 1 Hz, process data as follows:

(i) If your ECM updates a broadcast signal more frequently than 1 Hz, use PEMS to sample and record the signal's value more frequently. Calculate and record the 1 Hz mean of the more frequently updated data.

(ii) If your ECM updates a broadcast signal less frequently than 1 Hz, use

PEMS to sample and record the signal's value at the most frequent rate. Linearly interpolate between recorded values and record the interpolated values at 1 Hz.

(iii) Optionally, you may use PEMS to electronically filter the ECM signals to meet the rise time and fall time specifications in Table 1 of this section. Record the filtered signal at 1 Hz.

(2) *Omitting ECM signals.* Replace any discontinuous or irrational ECM data with linearly interpolated values from adjacent data.

(3) *Aligning ECM signals with other data.* You must perform time-alignment and dispersion of ECM signals, according to PEMS manufacturer instructions and using good engineering judgment.

(4) *ECM signals for determining test intervals.* You may use any combination of ECM signals, with or without other measurements, to determine the start-time and end-time of a test interval.

(5) *ECM signals for determining brake-specific emissions.* You may use any combination of ECM signals, with or without other measurements, to estimate engine speed, torque, brake-specific fuel consumption (BSFC, in units of mass of fuel per kW-hr), and fuel rate for use in brake-specific emission calculations. We recommend that the overall performance of any speed, torque, or BSFC estimator should meet the performance specifications in Table 1 of this section. We recommend using one of the following methods:

(i) *Speed.* Use the engine speed signal directly from the ECM. This signal is generally accurate and precise. You may develop your own speed algorithm based on other ECM signals.

(ii) *Torque.* Use one of the following:

(A) *ECM torque.* Use the engine-torque signal directly from the ECM, if broadcast. Determine if this signal is proportional to indicated torque or brake torque. If it is proportional to indicated torque, subtract friction torque from indicated torque and record the result as brake torque. Friction torque may be a separate signal broadcast from the ECM or you may have to determine it from laboratory data as a function of engine speed.

(B) *ECM %-load.* Use the %-load signal directly from the ECM, if broadcast. Determine if this signal is proportional to indicated torque or brake torque. If it is proportional to indicated torque, subtract the minimum %-load value from the %-load signal. Multiply this result by the maximum brake torque at the corresponding engine speed. Maximum brake torque versus speed information is commonly published by the engine manufacturer.

(C) *Your algorithms.* You may develop and use your own combination of ECM signals to determine torque.

(iii) *BSFC.* Use one of the following:

(A) Use ECM engine speed and ECM fuel flow signals to interpolate brake-specific fuel consumption data, which might be available from an engine laboratory as a function of ECM engine speed and ECM fuel signals.

(B) Use a single BSFC value that approximates the BSFC value over a test interval (as defined in subpart K of this part). This value may be a nominal BSFC value for all engine operation determined over one or more laboratory duty cycles, or it may be any other BSFC that you determine. If you use a nominal BSFC, we recommend that you select a value based on the BSFC measured over laboratory duty cycles that best represent the range of engine operation that defines a test interval for field-testing. You may use the methods of this paragraph (d)(5)(iii)(B) only if it does not adversely affect your ability to demonstrate compliance with applicable standards.

(C) You may develop and use your own combination of ECM signals to determine BSFC.

(iv) *ECM fuel rate.* Use the fuel rate signal directly from the ECM and chemical balance to determine the molar flow rate of exhaust. Use §1065.655(d) to determine the carbon mass fraction of fuel. You may alternatively develop and use your own combination of ECM signals to determine fuel mass flow rate.

(v) *Other ECM signals.* You may ask to use other ECM signals for determining brake-specific emissions, such as ECM air flow. We must approve the use of such signals in advance.

(6) *Permissible deviations.* ECM signals may deviate from the specifications of

this part 1065, but the expected deviation must not prevent you from demonstrating that you meet the applicable standards. For example, your emission results may be sufficiently below an applicable standard, such that the deviation would not significantly change the result. As another example, a very low engine-coolant temperature may define a logical statement that determines when a test interval may start. In this case, even if the ECM's sensor for detecting coolant temperature was not very accurate or repeatable, its output would never deviate so far as to significantly affect when a test interval may start.

[70 FR 40516, July 13, 2005, as amended at 73 FR 37344, June 30, 2008; 73 FR 59342, Oct. 8, 2008; 75 FR 68466, Nov. 8, 2010; 76 FR 57467, Sept. 15, 2011; 79 FR 23813, Apr. 28, 2014]

EFFECTIVE DATE NOTE: At 86 FR 34575, June 29, 2021, § 1065.915 was amended, effective July 29, 2021.

§ 1065.920 PEMS calibrations and verifications.

(a) *Subsystem calibrations and verifications.* Use all the applicable calibrations and verifications in subpart D of this part, including the linearity verifications in § 1065.307, to calibrate and verify PEMS. Note that a PEMS does not have to meet the system-response and updating-recording verifications of § 1065.308 and § 1065.309 if it meets the overall verification described in paragraph (b) of this section or if it measures PM using any method other than that described in § 1065.170(c)(1). This section does not apply to ECM signals. Note that because the regulations of this part require you to use good engineering judgment, it may be necessary to perform additional verifications and analysis. It may also be necessary to limit the range of conditions under which the PEMS can be used or to include specific additional maintenance to ensure that it functions properly under the test conditions. As provided in 40 CFR 1068.5, we will deem your system to not meet the requirements of this section if we determine that you did not use good engineering judgment to verify the measurement equipment. We may also deem your system to meet these requirements only under certain test conditions. If we ask for it, you must send us a summary of your verifications. We may also ask you to provide additional information or analysis to support your conclusions.

(b) *Overall verification.* This paragraph (b) specifies methods and criteria for verifying the overall performance of systems not fully compliant with requirements that apply for laboratory testing. Maintain records to show that the particular make, model, and configuration of your PEMS meets this verification. You may rely on data and other information from the PEMS manufacturer. However, we recommend that you generate your own records to show that your specific PEMS meets this verification. If you upgrade or change the configuration of your PEMS, your record must show that your new configuration meets this verification. The verification required by this section consists of operating an engine over a duty cycle in the laboratory and statistically comparing data generated and recorded by the PEMS with data simultaneously generated and recorded by laboratory equipment as follows:

(1) Mount an engine on a dynamometer for laboratory testing. Prepare the laboratory and PEMS for emission testing, as described in this part, to get simultaneous measurements. We recommend selecting an engine with emission levels close to the applicable duty-cycle standards, if possible.

(2) Select or create a duty cycle that has all the following characteristics:

(i) Engine operation that represents normal in-use speeds, loads, and degree of transient activity. Consider using data from previous field tests to generate a cycle.

(ii) A duration of (20 to 40) min.

(iii) At least 50% of engine operating time must include at least 10 valid test intervals for calculating emission levels for field testing. For example, for highway compression-ignition engines, select a duty cycle in which at least 50% of the engine operating time can be used to calculate valid NTE events.

(3) Starting with a warmed-up engine, run a valid emission test with the duty cycle from paragraph (b)(2) of this section. The laboratory and PEMS must both meet applicable validation

requirements, such as drift validation, hydrocarbon contamination validation, and proportional validation.

(4) Determine the brake-specific emissions for each test interval for both laboratory and the PEMS measurements, as follows:

(i) For both laboratory and PEMS measurements, use identical values to determine the beginning and end of each test interval.

(ii) For both laboratory and PEMS measurements, use identical values to determine total work over each test interval.

(iii) If the standard-setting part specifies the use of a measurement allowance for field testing, also apply the measurement allowance during calibration using good engineering judgment. If the measurement allowance is normally added to the standard, this means you must subtract the measurement allowance from the measured PEMS brake-specific emission result.

(iv) Round results to the same number of significant digits as the standard.

(5) Repeat the engine duty cycle and calculations until you have at least 100 valid test intervals.

(6) For each test interval and emission, subtract the lab result from the PEMS result.

(7) The PEMS passes the verification of this paragraph (b) if any one of the following are true for each constituent:

(i) 91% or more of the differences are zero or less than zero.

(ii) The entire set of test-interval results passes the 95% confidence alternate-procedure statistics for field testing (*t*-test and *F*-test) specified in subpart A of this part.

[70 FR 40516, July 13, 2005, as amended at 73 FR 37345, June 30, 2008; 75 FR 68467, Nov. 8, 2010; 79 FR 23814, Apr. 28, 2014]

§ 1065.925 PEMS preparation for field testing.

Take the following steps to prepare PEMS for field testing:

(a) Verify that ambient conditions at the start of the test are within the limits specified in the standard-setting part. Continue to monitor these values to determine if ambient conditions exceed the limits during the test.

(b) Install a PEMS and any accessories needed to conduct a field test.

(c) Power the PEMS and allow pressures, temperatures, and flows to stabilize to their operating set points.

(d) Bypass or purge any gaseous sampling PEMS instruments with ambient air until sampling begins to prevent system contamination from excessive cold-start emissions.

(e) Conduct calibrations and verifications.

(f) Operate any PEMS dilution systems at their expected flow rates using a bypass.

(g) If you use a gravimetric balance to determine whether an engine meets an applicable PM standard, follow the procedures for PM sample preconditioning and tare weighing as described in § 1065.590. Operate the PM-sampling system at its expected flow rates using a bypass.

(h) Verify the amount of contamination in the PEMS HC sampling system before the start of the field test as follows:

(1) Select the HC analyzer range for measuring the maximum concentration expected at the HC standard.

(2) Zero the HC analyzers using a zero gas or ambient air introduced at the analyzer port. When zeroing a FID, use the FID's burner air that would be used for in-use measurements (generally either ambient air or a portable source of burner air).

(3) Span the HC analyzer using span gas introduced at the analyzer port.

(4) Overflow zero or ambient air at the HC probe inlet or into a tee near the probe outlet.

(5) Measure the HC concentration in the sampling system:

(i) For continuous sampling, record the mean HC concentration as overflow zero air flows.

(ii) For batch sampling, fill the sample medium and record its mean concentration.

(6) Record this value as the initial HC concentration, x_{THCinit}, and use it to correct measured values as described in § 1065.660.

(7) If the initial HC concentration exceeds the greater of the following values, determine the source of the contamination and take corrective action,

such as purging the system or replacing contaminated portions:

(i) 2% of the flow-weighted mean concentration expected at the standard or measured during testing.

(ii) 2 μmol/mol.

(8) If corrective action does not resolve the deficiency, you may use a contaminated HC system if it does not prevent you from demonstrating compliance with the applicable emission standards.

[70 FR 40516, July 13, 2005, as amended at 73 FR 37345, June 30, 2008; 73 FR 59342, Oct. 8, 2008; 75 FR 68467, Nov. 8, 2010; 76 FR 57467, Sept. 15, 2011]

§ 1065.930 Engine starting, restarting, and shutdown.

Unless the standard-setting part specifies otherwise, start, restart, and shut down the test engine for field testing as follows:

(a) Start or restart the engine as described in the owners manual.

(b) If the engine does not start after 15 seconds of cranking, stop cranking and determine the reason it failed to start. However, you may crank the engine longer than 15 seconds, as long as the owners manual or the service-repair manual describes the longer cranking time as normal.

(c) Respond to engine stalling with the following steps:

(1) If the engine stalls during a required warm-up before emission sampling begins, restart the engine and continue warm-up.

(2) If the engine stalls at any other time after emission sampling begins, restart the engine and continue testing.

(d) Shut down and restart the engine according to the manufacturer's specifications, as needed during normal operation in-use, but continue emission sampling until the field test is complete.

§ 1065.935 Emission test sequence for field testing.

(a) Time the start of field testing as follows:

(1) If the standard-setting part requires only hot-stabilized emission measurements, operate the engine in-use until the engine coolant, block, or head absolute temperature is within ±10% of its mean value for the previous 2 min or until an engine thermostat controls engine temperature with coolant or air flow.

(2) If the standard-setting part requires hot-start emission measurements, shut down the engine after at least 2 min at the temperature tolerance specified in paragraph (a)(1) of this section. Start the field test within 20 min of engine shutdown.

(3) If the standard-setting part requires cold-start emission measurements, proceed to the steps specified in paragraph (b) of this section.

(b) Take the following steps before emission sampling begins:

(1) For batch sampling, connect clean storage media, such as evacuated bags or tare-weighed PM sample media.

(2) Operate the PEMS according to the instrument manufacturer's instructions and using good engineering judgment.

(3) Operate PEMS heaters, dilution systems, sample pumps, cooling fans, and the data-collection system.

(4) Pre-heat or pre-cool PEMS heat exchangers in the sampling system to within their tolerances for operating temperatures.

(5) Allow all other PEMS components such as sample lines, filters, and pumps to stabilize at operating temperature.

(6) Verify that no significant vacuum-side leak exists in the PEMS, as described in § 1065.345.

(7) Adjust PEMS flow rates to desired levels, using bypass flow if applicable.

(8) Zero and span all PEMS gas analyzers using NIST-traceable gases that meet the specifications of § 1065.750.

(c) Start testing as follows:

(1) Before the start of the first test interval, zero or re-zero any PEMS electronic integrating devices, as needed.

(2) If the engine is already running and warmed up and starting is not part of field testing, start the field test by simultaneously starting to sample exhaust, record engine and ambient data, and integrate measured values using a PEMS.

(3) If engine starting is part of field testing, start field testing by simultaneously starting to sample from the exhaust system, record engine and ambient data, and integrate measured values using a PEMS. Then start the engine.

(d) Continue the test as follows:

(1) Continue to sample exhaust, record data and integrate measured values throughout normal in-use operation of the engine.

(2) Between each test interval, zero or re-zero any electronic integrating devices, and reset batch storage media, as needed.

(3) The engine may be stopped and started, but continue to sample emissions throughout the entire field test.

(4) Conduct periodic verifications such as zero and span verifications on PEMS gas analyzers, as recommended by the PEMS manufacturer or as indicated by good engineering judgment. Results from these verifications will be used to calculate and correct for drift according to paragraph (g) of this section. Do not include data recorded during verifications in emission calculations.

(5) You may periodically condition and analyze batch samples in-situ, including PM samples; for example you may condition an inertial PM balance substrate if you use an inertial balance to measure PM.

(6) You may have personnel monitoring and adjusting the PEMS during a test, or you may operate the PEMS unattended.

(e) Stop testing as follows:

(1) Continue sampling as needed to get an appropriate amount of emission measurement, according to the standard setting part. If the standard-setting part does not describe when to stop sampling, develop a written protocol before you start testing to establish how you will stop sampling. You may not determine when to stop testing based on emission results.

(2) At the end of the field test, allow the sampling systems' response times to elapse and then stop sampling. Stop any integrators and indicate the end of the test cycle on the data-collection medium.

(3) You may shut down the engine before or after you stop sampling.

(f) For any proportional batch sample, such as a bag sample or PM sample, verify for each test interval whether or not proportional sampling was maintained according to §1065.545. Void the sample for any test interval that did not maintain proportional sampling according to §1065.545.

(g) Take the following steps after emission sampling is complete:

(1) As soon as practical after the emission sampling, analyze any gaseous batch samples.

(2) If you used dilution air, either analyze background samples or assume that background emissions were zero. Refer to §1065.140 for dilution-air specifications.

(3) After quantifying all exhaust gases, record mean analyzer values after stabilizing a zero gas to each analyzer, then record mean analyzer values after stabilizing the span gas to the analyzer. Stabilization may include time to purge an analyzer of any sample gas, plus any additional time to account for analyzer response. Use these recorded values to correct for drift as described in §1065.550.

(4) Invalidate any test intervals that do not meet the range criteria in §1065.550. Note that it is acceptable that analyzers exceed 100% of their ranges when measuring emissions between test intervals, but not during test intervals. You do not have to retest an engine in the field if the range criteria are not met.

(5) Invalidate any test intervals that do not meet the drift criterion in §1065.550. For NMHC, invalidate any test intervals if the difference between the uncorrected and the corrected brake-specific NMHC emission values are within ±10% of the uncorrected results or the applicable standard, whichever is greater. For test intervals that do meet the drift criterion, correct those test intervals for drift according to §1065.672 and use the drift corrected results in emissions calculations.

(6) Unless you weighed PM in-situ, such as by using an inertial PM balance, place any used PM samples into covered or sealed containers and return

them to the PM-stabilization environment and weigh them as described in § 1065.595.

[70 FR 40516, July 13, 2005, as amended at 73 FR 37345, June 30, 2008]

§ 1065.940 Emission calculations.

(a) Perform emission calculations as described in § 1065.650 to calculate brake-specific emissions for each test interval using any applicable information and instructions in the standard-setting part.

(b) You may use a fixed molar mass for the diluted exhaust mixture for field testing. Determine this fixed value by engineering analysis.

[75 FR 68467, Nov. 8, 2010]

Subpart K—Definitions and Other Reference Information

§ 1065.1001 Definitions.

The definitions in this section apply to this part. The definitions apply to all subparts unless we note otherwise. All undefined terms have the meaning the Act gives them. The definitions follow:

300 series stainless steel means any stainless steel alloy with a Unified Numbering System for Metals and Alloys number designated from S30100 to S39000. For all instances in this part where we specify 300 series stainless steel, such parts must also have a smooth inner-wall construction. We recommend an average roughness, R_a, no greater than 4 μm.

Accuracy means the absolute difference between a reference quantity and the arithmetic mean of ten mean measurements of that quantity. Determine instrument accuracy, repeatability, and noise from the same data set. We specify a procedure for determining accuracy in § 1065.305.

Act means the Clean Air Act, as amended, 42 U.S.C. 7401–7671q.

Adjustable parameter means any device, system, or element of design that someone can adjust (including those which are difficult to access) and that, if adjusted, may affect emissions or engine performance during emission testing or normal in-use operation. This includes, but is not limited to, parameters related to injection timing and fueling rate. In some cases, this may exclude a parameter that is difficult to access if it cannot be adjusted to affect emissions without significantly degrading engine performance, or if it will not be adjusted in a way that affects emissions during in-use operation.

Aerodynamic diameter means the diameter of a spherical water droplet that settles at the same constant velocity as the particle being sampled.

Aftertreatment means relating to a catalytic converter, particulate filter, or any other system, component, or technology mounted downstream of the exhaust valve (or exhaust port) whose design function is to decrease emissions in the engine exhaust before it is exhausted to the environment. Exhaust-gas recirculation (EGR) and turbochargers are not aftertreatment.

Allowed procedures means procedures that we either specify in this part 1065 or in the standard-setting part or approve under § 1065.10.

Alternate procedures means procedures allowed under § 1065.10(c)(7).

Applicable standard means an emission standard to which an engine is subject; or a family emission limit to which an engine is certified under an emission credit program in the standard-setting part.

Aqueous condensation means the precipitation of water-containing constituents from a gas phase to a liquid phase. Aqueous condensation is a function of humidity, pressure, temperature, and concentrations of other constituents such as sulfuric acid. These parameters vary as a function of engine intake-air humidity, dilution-air humidity, engine air-to-fuel ratio, and fuel composition—including the amount of hydrogen and sulfur in the fuel.

Atmospheric pressure means the wet, absolute, atmospheric static pressure. Note that if you measure atmospheric pressure in a duct, you must ensure that there are negligible pressure losses between the atmosphere and your measurement location, and you must account for changes in the duct's static pressure resulting from the flow.

Auto-ranging means a gas analyzer function that automatically changes the analyzer digital resolution to a

larger range of concentrations as the concentration approaches 100% of the analyzer's current range. Auto-ranging does not mean changing an analog amplifier gain within an analyzer.

Auxiliary emission-control device means any element of design that senses temperature, motive speed, engine RPM, transmission gear, or any other parameter for the purpose of activating, modulating, delaying, or deactivating the operation of any part of the emission-control system.

Average means the arithmetic mean of a sample.

Brake power has the meaning given in the standard-setting part. If it is not defined in the standard-setting part, brake power means the usable power output of the engine, not including power required to fuel, lubricate, or heat the engine, circulate coolant to the engine, or to operate aftertreatment devices. If the engine does not power these accessories during a test, subtract the work required to perform these functions from the total work used in brake-specific emission calculations. Subtract engine fan work from total work only for air-cooled engines.

C_1-equivalent means a convention of expressing HC concentrations based on the total number of carbon atoms present, such that the C_1-equivalent of a molar HC concentration equals the molar concentration multiplied by the mean number of carbon atoms in each HC molecule. For example, the C_1-equivalent of 10 μmol/mol of propane (C_3H_8) is 30 μmol/mol. C_1-equivalent molar values may be denoted as ''ppmC'' in the standard-setting part. Molar mass may also be expressed on a C_1 basis. Note that calculating HC masses from molar concentrations and molar masses is only valid where they are each expressed on the same carbon basis.

Calibration means the process of setting a measurement system's response so that its output agrees with a range of reference signals. Contrast with ''verification''.

Calibration gas means a purified gas mixture used to calibrate gas analyzers. Calibration gases must meet the specifications of §1065.750. Note that calibration gases and span gases are qualitatively the same, but differ in terms of their primary function. Various performance verification checks for gas analyzers and sample handling components might refer to either calibration gases or span gases.

Certification means relating to the process of obtaining a certificate of conformity for an engine family that complies with the emission standards and requirements in the standard-setting part.

Compression-ignition means relating to a type of reciprocating, internal-combustion engine that is not a spark-ignition engine.

Confidence interval means the range associated with a probability that a quantity will be considered statistically equivalent to a reference quantity.

Constant-speed engine means an engine whose certification is limited to constant-speed operation. Engines whose constant-speed governor function is removed or disabled are no longer constant-speed engines.

Constant-speed operation means engine operation with a governor that automatically controls the operator demand to maintain engine speed, even under changing load. Governors do not always maintain speed exactly constant. Typically speed can decrease (0.1 to 10) % below the speed at zero load, such that the minimum speed occurs near the engine's point of maximum power. (Note: An engine with an adjustable governor setting may be considered to operate at constant speed, subject to our approval. For such engines, the governor setting is considered an adjustable parameter.)

Coriolis meter means a flow-measurement instrument that determines the mass flow of a fluid by sensing the vibration and twist of specially designed flow tubes as the flow passes through them. The twisting characteristic is called the Coriolis effect. According to Newton's Second Law of Motion, the amount of sensor tube twist is directly proportional to the mass flow rate of the fluid flowing through the tube. See §1065.220.

Designated Compliance Officer means the Director, Compliance and Innovative Strategies Division (6405–J), U.S. Environmental Protection Agency, 1200

Pennsylvania Ave., NW., Washington, DC 20460.

Dewpoint means a measure of humidity stated as the equilibrium temperature at which water condenses under a given pressure from moist air with a given absolute humidity. Dewpoint is specified as a temperature in °C or K, and is valid only for the pressure at which it is measured. See §1065.645 to determine water vapor mole fractions from dewpoints using the pressure at which the dewpoint is measured.

Diesel exhaust fluid (DEF) means a liquid reducing agent (other than the engine fuel) used in conjunction with selective catalytic reduction to reduce NO_X emissions. *Diesel exhaust fluid* is generally understood to be an aqueous solution of urea conforming to the specifications of ISO 18611 or ISO 22241.

Dilution ratio (DR) means the amount of diluted exhaust per amount of undiluted exhaust.

Discrete-mode means relating to a discrete-mode type of steady-state test, as described in the standard-setting part.

Dispersion means either:

(1) The broadening and lowering of a signal due to any fluid capacitance, fluid mixing, or electronic filtering in a sampling system. (Note: To adjust a signal so its dispersion matches that of another signal, you may adjust the system's fluid capacitance, fluid mixing, or electronic filtering.)

(2) The mixing of a fluid, especially as a result of fluid mechanical forces or chemical diffusion.

Drift means the difference between a zero or calibration signal and the respective value reported by a measurement instrument immediately after it was used in an emission test, as long as you zeroed and spanned the instrument just before the test.

Duty cycle means one of the following:

(1) A series of speed and torque values (or power values) that an engine must follow during a laboratory test. Duty cycles are specified in the standard-setting part. A single duty cycle may consist of one or more test intervals. A series of speed and torque values meeting the definition of this paragraph (1) may also be considered a test cycle. For example, a duty cycle may be a ramped-modal cycle, which has one test interval; a cold-start plus hot-start transient cycle, which has two test intervals; or a discrete-mode cycle, which has one test interval for each mode.

(2) A set of weighting factors and the corresponding speed and torque values, where the weighting factors are used to combine the results of multiple test intervals into a composite result.

Electric power generation application means an application whose purpose is to generate a precise frequency of electricity, which is characterized by an engine that controls engine speed very precisely. This would generally not apply to welders or portable home generators.

Electronic control module means an engine's electronic device that uses data from engine sensors to control engine parameters.

Emission-control system means any device, system, or element of design that controls or reduces the emissions of regulated pollutants from an engine.

Emission-data engine means an engine that is tested for certification. This includes engines tested to establish deterioration factors.

Emission-related maintenance means maintenance that substantially affects emissions or is likely to substantially affect emission deterioration.

Engine family means a group of engines with similar emission characteristics throughout the useful life, as specified in the standard-setting part.

Engine governed speed means the engine operating speed when it is controlled by the installed governor.

Exhaust-gas recirculation means a technology that reduces emissions by routing exhaust gases that had been exhausted from the combustion chamber(s) back into the engine to be mixed with incoming air before or during combustion. The use of valve timing to increase the amount of residual exhaust gas in the combustion chamber(s) that is mixed with incoming air before or during combustion is not considered exhaust-gas recirculation for the purposes of this part.

Fall time, t_{90-10}, means the time interval of a measurement instrument's response after any step decrease to the input between the following points:

(1) The point at which the response has fallen 10% of the total amount it will fall in response to the step change.

(2) The point at which the response has fallen 90% of the total amount it will fall in response to the step change.

Flow-weighted mean means the mean of a quantity after it is weighted proportional to a corresponding flow rate. For example, if a gas concentration is measured continuously from the raw exhaust of an engine, its flow-weighted mean concentration is the sum of the products of each recorded concentration times its respective exhaust flow rate, divided by the sum of the recorded flow rates. As another example, the bag concentration from a CVS system is the same as the flow-weighted mean concentration, because the CVS system itself flow-weights the bag concentration.

Fuel type means a general category of fuels such as gasoline or LPG. There can be multiple grades within a single type of fuel, such as all-season and winter-grade gasoline.

Good engineering judgment means judgments made consistent with generally accepted scientific and engineering principles and all available relevant information. See 40 CFR 1068.5 for the administrative process we use to evaluate good engineering judgment.

HEPA filter means high-efficiency particulate air filters that are rated to achieve a minimum initial particle-removal efficiency of 99.97% using ASTM F1471 (incorporated by reference in § 1065.1010).

High-idle speed means the engine speed at which an engine governor function controls engine speed with operator demand at maximum and with zero load applied. ''Warm high-idle speed'' is the high-idle speed of a warmed-up engine.

High-speed governor means any device, system, or element of design that modulates the engine output torque for the purpose of limiting the maximum engine speed.

Hydraulic diameter means the diameter of a circle whose area is equal to the area of a noncircular cross section of tubing, including its wall thickness. The wall thickness is included only for the purpose of facilitating a simplified and nonintrusive measurement.

Hydrocarbon (HC) means THC, THCE, NMHC, NMNEHC, NMOG, or NMHCE, as applicable. Hydrocarbon generally means the hydrocarbon group on which the emission standards are based for each type of fuel and engine.

Identification number means a unique specification (for example, a model number/serial number combination) that allows someone to distinguish a particular engine from other similar engines.

Idle speed means the engine speed at which an engine governor function controls engine speed with operator demand at minimum and with minimum load applied (greater than or equal to zero). For engines without a governor function that controls idle speed, idle speed means the manufacturer-declared value for lowest engine speed possible with minimum load. This definition does not apply for operation designated as ''high-idle speed.'' ''Warm idle speed'' is the idle speed of a warmed-up engine.

Intermediate test speed has the meaning given in § 1065.610.

Linearity means the degree to which measured values agree with respective reference values. Linearity is quantified using a linear regression of pairs of measured values and reference values over a range of values expected or observed during testing. Perfect linearity would result in an intercept, a_0, equal to zero, a slope, a_1, of one, a coefficient of determination, r^2, of one, and a standard error of the estimate, *SEE*, of zero. The term ''linearity'' is not used in this part to refer to the shape of a measurement instrument's unprocessed response curve, such as a curve relating emission concentration to voltage output. A properly performing instrument with a nonlinear response curve will meet linearity specifications.

Manufacturer has the meaning given in section 216(1) of the Act. In general, this term includes any person who manufactures an engine or vehicle for sale in the United States or otherwise introduces a new nonroad engine into commerce in the United States. This includes importers who import engines or vehicles for resale.

Maximum test speed has the meaning given in § 1065.610.

Maximum test torque has the meaning given in § 1065.610.

Measurement allowance means a specified adjustment in the applicable emission standard or a measured emission value to reflect the relative quality of the measurement. See the standard-setting part to determine whether any measurement allowances apply for your testing. Measurement allowances generally apply only for field testing and are intended to account for reduced accuracy or precision that result from using field-grade measurement systems.

Mode means one of the following:

(1) A distinct combination of engine speed and load for steady-state testing.

(2) A continuous combination of speeds and loads specifying a transition during a ramped-modal test.

(3) A distinct operator demand setting, such as would occur when testing locomotives or constant-speed engines.

NIST-accepted means relating to a value that has been assigned or named by NIST.

NIST-traceable means relating to a standard value that can be related to NIST-stated references through an unbroken chain of comparisons, all having stated uncertainties, as specified in NIST Technical Note 1297 (incorporated by reference in § 1065.1010). Allowable uncertainty limits specified for NIST-traceability refer to the propagated uncertainty specified by NIST. You may ask to use other internationally recognized standards that are equivalent to NIST standards.

Noise means the precision of 30 seconds of updated recorded values from a measurement instrument as it quantifies a zero or reference value. Determine instrument noise, repeatability, and accuracy from the same data set. We specify a procedure for determining noise in § 1065.305.

Nonmethane hydrocarbon equivalent (NMHCE) means the sum of the carbon mass contributions of non-oxygenated nonmethane hydrocarbons, alcohols and aldehydes, or other organic compounds that are measured separately as contained in a gas sample, expressed as exhaust nonmethane hydrocarbon from petroleum-fueled engines. The hydrogen-to-carbon ratio of the equivalent hydrocarbon is 1.85:1.

Nonmethane hydrocarbons (NMHC) means the sum of all hydrocarbon species except methane. Refer to § 1065.660 for NMHC determination.

Nonmethane nonethane hydrocarbon (NMNEHC) means the sum of all hydrocarbon species except methane and ethane. Refer to § 1065.660 for NMNEHC determination.

Nonroad means relating to nonroad engines.

Nonroad engine has the meaning we give in 40 CFR 1068.30. In general this means all internal-combustion engines except motor vehicle engines, stationary engines, engines used solely for competition, or engines used in aircraft.

Open crankcase emissions means any flow from an engine's crankcase that is emitted directly into the environment. Crankcase emissions are not ''open crankcase emissions'' if the engine is designed to always route all crankcase emissions back into the engine (for example, through the intake system or an aftertreatment system) such that all the crankcase emissions, or their products, are emitted into the environment only through the engine exhaust system.

Operator demand means an engine operator's input to control engine output. The ''operator'' may be a person (i.e., manual), or a governor (i.e., automatic) that mechanically or electronically signals an input that demands engine output. Input may be from an accelerator pedal or signal, a throttle-control lever or signal, a fuel lever or signal, a speed lever or signal, or a governor setpoint or signal. Output means engine power, P, which is the product of engine speed, f_n, and engine torque, T.

Oxides of nitrogen means NO and NO_2 as measured by the procedures specified in § 1065.270. Oxides of nitrogen are expressed quantitatively as if the NO is in the form of NO_2, such that you use an effective molar mass for all oxides of nitrogen equivalent to that of NO_2.

Oxygenated fuels means fuels composed of at least 25% oxygen-containing compounds, such as ethanol or methanol. Testing engines that use oxygenated fuels generally requires the

use of the sampling methods in subpart I of this part. However, you should read the standard-setting part and subpart I of this part to determine appropriate sampling methods.

Partial pressure means the pressure, p, attributable to a single gas in a gas mixture. For an ideal gas, the partial pressure divided by the total pressure is equal to the constituent's molar concentration, x.

Percent (%) means a representation of exactly 0.01. Numbers expressed as percentages in this part (such as a tolerance of ±2%) have infinite precision, so 2% and 2.000000000% have the same meaning. This means that where we specify some percentage of a total value, the calculated value has the same number of significant digits as the total value. For example, 2% of a span value where the span value is 101.3302 is 2.026604.

Portable emission measurement system (PEMS) means a measurement system consisting of portable equipment that can be used to generate brake-specific emission measurements during field testing or laboratory testing.

Precision means two times the standard deviation of a set of measured values of a single zero or reference quantity. See also the related definitions of *noise* and *repeatability* in this section.

Procedures means all aspects of engine testing, including the equipment specifications, calibrations, calculations and other protocols and specifications needed to measure emissions, unless we specify otherwise.

Proving ring is a device used to measure static force based on the linear relationship between stress and strain in an elastic material. It is typically a steel alloy ring, and you measure the deflection (strain) of its diameter when a static force (stress) is applied across its diameter.

PTFE means polytetrafluoroethylene, commonly known as Teflon™.

Purified air means air meeting the specifications for purified air in § 1065.750. Purified air may be produced by purifying ambient air. The purification may occur at the test site or at another location (such as at a gas supplier's facility). Alternatively, purified air may be synthetically generated, using good engineering judgment, from purified oxygen and nitrogen. The addition of other elements normally present in purified ambient air (such as Ar) is not required.

Ramped-modal means relating to a ramped-modal type of steady-state test, as described in the standard-setting part.

Recommend has the meaning given in § 1065.201.

Regression statistics means any of the regression statistics specified in § 1065.602.

Repeatability means the precision of ten mean measurements of a reference quantity. Determine instrument repeatability, accuracy, and noise from the same data set. We specify a procedure for determining repeatability in § 1065.305.

Revoke has the meaning given in 40 CFR 1068.30.

Rise time, t_{10-90}, means the time interval of a measurement instrument's response after any step increase to the input between the following points:

(1) The point at which the response has risen 10% of the total amount it will rise in response to the step change.

(2) The point at which the response has risen 90% of the total amount it will rise in response to the step change.

Roughness (or average roughness, R_a) means the size of finely distributed vertical surface deviations from a smooth surface, as determined when traversing a surface. It is an integral of the absolute value of the roughness profile measured over an evaluation length.

Round means to apply the rounding convention specified in § 1065.20(e), unless otherwise specified.

Scheduled maintenance means adjusting, repairing, removing, disassembling, cleaning, or replacing components or systems periodically to keep a part or system from failing, malfunctioning, or wearing prematurely. It also may mean actions you expect are necessary to correct an overt indication of failure or malfunction for which periodic maintenance is not appropriate.

Shared atmospheric pressure meter means an atmospheric pressure meter

whose output is used as the atmospheric pressure for an entire test facility that has more than one dynamometer test cell.

Shared humidity measurement means a humidity measurement that is used as the humidity for an entire test facility that has more than one dynamometer test cell.

Span means to adjust an instrument so that it gives a proper response to a calibration standard that represents between 75% and 100% of the maximum value in the instrument range or expected range of use.

Span gas means a purified gas mixture used to span gas analyzers. Span gases must meet the specifications of § 1065.750. Note that calibration gases and span gases are qualitatively the same, but differ in terms of their primary function. Various performance verification checks for gas analyzers and sample handling components might refer to either calibration gases or span gases.

Spark-ignition means relating to a gasoline-fueled engine or any other type of engine with a spark plug (or other sparking device) and with operating characteristics significantly similar to the theoretical Otto combustion cycle. Spark-ignition engines usually use a throttle to regulate intake air flow to control power during normal operation.

Special procedures means procedures allowed under § 1065.10(c)(2).

Specified procedures means procedures we specify in this part 1065 or the standard-setting part. Other procedures allowed or required by § 1065.10(c) are not specified procedures.

Standard deviation has the meaning given in § 1065.602. Note this is the standard deviation for a non-biased sample.

Standard-setting part means the part in the Code of Federal Regulations that defines emission standards for a particular engine. See § 1065.1(a).

Steady-state means relating to emission tests in which engine speed and load are held at a finite set of nominally constant values. Steady-state tests are either discrete-mode tests or ramped-modal tests.

Stoichiometric means relating to the particular ratio of air and fuel such that if the fuel were fully oxidized, there would be no remaining fuel or oxygen. For example, stoichiometric combustion in a gasoline-fueled engine typically occurs at an air-to-fuel mass ratio of about 14.7:1.

Storage medium means a particulate filter, sample bag, or any other storage device used for batch sampling.

t_{0-50} means the time interval of a measurement system's response after any step increase to the input between the following points:

(1) The point at which the step change is initiated at the sample probe.

(2) The point at which the response has risen 50% of the total amount it will rise in response to the step change.

t_{100-50} means the time interval of a measurement system's response after any step decrease to the input between the following points:

(1) The point at which the step change is initiated at the sample probe.

(2) The point at which the response has fallen 50% of the total amount it will fall in response to the step change.

Test engine means an engine in a test sample.

Test interval means a duration of time over which you determine brake-specific emissions. For example, the standard-setting part may specify a complete laboratory duty cycle as a cold-start test interval, plus a hot-start test interval. As another example, a standard-setting part may specify a field-test interval, such as a ''not-to-exceed'' (NTE) event, as a duration of time over which an engine operates within a certain range of speed and torque. In cases where multiple test intervals occur over a duty cycle, the standard-setting part may specify additional calculations that weight and combine results to arrive at composite values for comparison against the applicable standards.

Test sample means the collection of engines selected from the population of an engine family for emission testing.

Tolerance means the interval in which at least 95% of a set of recorded values of a certain quantity must lie. Use the specified recording frequencies and time intervals to determine if a quantity is within the applicable tolerance. The concept of tolerance is intended to address random variability.

You may not take advantage of the tolerance specification to incorporate a bias into a measurement.

Total hydrocarbon (THC) means the combined mass of organic compounds measured by the specified procedure for measuring total hydrocarbon, expressed as a hydrocarbon with a hydrogen-to-carbon mass ratio of 1.85:1.

Total hydrocarbon equivalent (THCE) means the sum of the carbon mass contributions of non-oxygenated hydrocarbons, alcohols and aldehydes, or other organic compounds that are measured separately as contained in a gas sample, expressed as exhaust hydrocarbon from petroleum-fueled engines. The hydrogen-to-carbon ratio of the equivalent hydrocarbon is 1.85:1.

Transformation time, t_{50}, means the overall system response time to any step change in input, generally the average of the time to reach 50% response to a step increase, t_{0-50}, or to a step decrease, t_{100-50}.

Uncertainty means uncertainty with respect to NIST-traceability. See the definition of NIST-traceable in this section.

United States means the States, the District of Columbia, the Commonwealth of Puerto Rico, the Commonwealth of the Northern Mariana Islands, Guam, American Samoa, and the U.S. Virgin Islands.

Useful life means the period during which a new engine is required to comply with all applicable emission standards. The standard-setting part defines the specific useful-life periods for individual engines.

Variable-speed engine means an engine that is not a constant-speed engine.

Vehicle means any vehicle, vessel, or type of equipment using engines to which this part applies. For purposes of this part, the term ''vehicle'' may include nonmotive machines or equipment such as a pump or generator.

Verification means to evaluate whether or not a measurement system's outputs agree with a range of applied reference signals to within one or more predetermined thresholds for acceptance. Contrast with ''calibration''.

We (us, our) means the Administrator of the Environmental Protection Agency and any authorized representatives.

Work has the meaning given in § 1065.110.

Zero means to adjust an instrument so it gives a zero response to a zero calibration standard, such as purified nitrogen or purified air for measuring concentrations of emission constituents.

Zero gas means a gas that yields a zero response in an analyzer. This may either be purified nitrogen, purified air, a combination of purified air and purified nitrogen. For field testing, *zero gas* may include ambient air.

[70 FR 40516, July 13, 2005, as amended at 73 FR 37346, June 30, 2008; 73 FR 59342, Oct. 8, 2008; 74 FR 8428, Feb. 24, 2009; 74 FR 56518, Oct. 30, 2009; 75 FR 23058, Apr. 30, 2010; 76 FR 57467, Sept. 15, 2011; 79 FR 23814, Apr. 28, 2014; 81 FR 74191, Oct. 25, 2016]

EFFECTIVE DATE NOTE: At 86 FR 34575, June 29, 2021, § 1065.1001 was amended, effective July 29, 2021.

§ 1065.1005 Symbols, abbreviations, acronyms, and units of measure.

The procedures in this part generally follow the International System of Units (SI), as detailed in NIST Special Publication 811, which we incorporate by reference in § 1065.1010. See § 1065.20 for specific provisions related to these conventions. This section summarizes the way we use symbols, units of measure, and other abbreviations.

(a) *Symbols for quantities*. This part uses the following symbols and units of measure for various quantities:

Symbol	Quantity	Unit	Unit symbol	Units in terms of SI base units
α	atomic hydrogen-to-carbon ratio	mole per mole	mol/mol	1.
A	area	square meter	m^2	m^2.
a_0	intercept of least squares regression.			
a_1	slope of least squares regression.			
a_g	acceleration of Earth's gravity	meter per square second	m/s^2	$m \cdot s^{-2}$.
β	ratio of diameters	meter per meter	m/m	1.
β	atomic oxygen-to-carbon ratio	mole per mole	mol/mol	1.

Symbol	Quantity	Unit	Unit symbol	Units in terms of SI base units
$C_{\#}$	number of carbon atoms in a molecule.			
C_d	discharge coefficient.			
C_f	flow coefficient.			
δ	atomic nitrogen-to-carbon ratio	mole per mole	mol/mol	1.
d	Diameter	meter	m	m.
DR	dilution ratio	mole per mole	mol/mol	1.
ε	error between a quantity and its reference.			
e	brake-specific emission or fuel consumption.	gram per kilowatt hour	g/(kW·hr)	$\cdot 3.6 \cdot 10^{-6} \cdot ; m^{-2} \cdot kg^{-1} \cdot s^2$.
F	F-test statistic.			
f	frequency	hertz	Hz	s^{-1}.
f_n	angular speed (shaft)	revolutions per minute	r/min	$\pi \cdot 30^{-1} \cdot s^{-1}$.
γ	ratio of specific heats	(joule per kilogram kelvin) per (joule per kilogram kelvin).	(J/(kg·K))/(J/(kg·K)).	1.
γ	atomic sulfur-to-carbon ratio	mole per mole	mol/mol	1.
K	correction factor			1.
K_v	calibration coefficient		$m^4 \cdot ; s \cdot K^{0.5}/kg$	$m^4 \cdot kg^{-1} s \cdot K^{0.5}$.
l	length	meter	m	m.
μ	viscosity, dynamic	pascal second	Pa·s	$m^{-1} \cdot kg \cdot s^{-1}$.
M	molar mass [1]	gram per mole	g/mol	$10^{-3} \cdot kg \cdot mol^{-1}$.
m	mass	kilogram	kg	kg.
$\dot{m}$	mass rate	kilogram per second	kg/s	$kg \cdot s^{-1}$.
ν	viscosity, kinematic	meter squared per second	m^2/s	$m^2 \cdot s^{-1}$.
N	total number in series.			
n	amount of substance	mole	mol	mol.
$\dot{n}$	amount of substance rate	mole per second	mol/s	$mol \cdot s^{-1}$.
P	power	kilowatt	kW	$10^3 \cdot m^2 \cdot kg \cdot s^{-3}$.
PF	penetration fraction.			
p	pressure	pascal	Pa	$m^{-1} \cdot kg \cdot s^{-2}$.
ρ	mass density	kilogram per cubic meter	kg/m^3	$m_{-3} \cdot kg$.
Δ	differential static pressure	pascal	Pa	$m^{-1} \cdot kg \cdot s^{-2}$.
r	ratio of pressures	pascal per pascal	Pa/Pa	1.
r^2	coefficient of determination.			
Ra	average surface roughness	micrometer	µm	$10^{-6} \cdot m$.
$Re^{\#}$	Reynolds number.			
RF	response factor.			
RH	relative humidity.			
σ	non-biased standard deviation.			
S	Sutherland constant	kelvin	K	K.
SEE	standard estimate of error.			
T	absolute temperature	kelvin	K	K.
T	Celsius temperature	degree Celsius	°C	K—273.15.
T	torque (moment of force)	newton meter	N·m	$m^2 \cdot kg \cdot s^{-2}$.
θ	plane angle	degrees	°	rad.
t	time	second	s	s.
Δt	time interval, period, 1/frequency	second	s	s.
V	volume	cubic meter	m^3	m^3.
$\dot{V}$	volume rate	cubic meter per second	m^3/s	$m^3 \cdot s^{-1}$.
W	work	kilowatt-hour	kW·hr	$3.6^{-1} \cdot 10^6 \cdot m^2 \cdot kg \cdot s^{-2}$.
w_C	carbon mass fraction	gram per gram	g/g	1.
x	amount of substance mole fraction [2].	mole per mole	mol/mol	1.
$\bar{x}$	flow-weighted mean concentration	mole per mole	mol/mol	1.
y	generic variable.			
Z	compressibility factor.			

[1] See paragraph (f)(2) of this section for the values to use for molar masses. Note that in the cases of NO_X and HC, the regulations specify effective molar masses based on assumed speciation rather than actual speciation.
[2] Note that mole fractions for THC, THCE, NMHC, NMHCE, and NOTHC are expressed on a C_1-equivalent basis.

(b) *Symbols for chemical species*. This part uses the following symbols for chemical species and exhaust constituents:

Symbol	Species
Ar	argon.
C	carbon.
CH_2O	formaldehyde.
CH_2O_2	formic acid.
CH_3OH	methanol.
CH_4	methane.
C_2H_4O	acetaldehyde.
C_2H_5OH	ethanol.
C_2H_6	ethane.

Symbol	Species
C_3H_7OH	propanol.
C_3H_8	propane.
C_4H_{10}	butane.
C_5H_{12}	pentane.
CO	carbon monoxide.
CO_2	carbon dioxide.
H	atomic hydrogen.
H_2	molecular hydrogen.
H_2O	water.
H_2SO_4	sulfuric acid.
HC	hydrocarbon.
He	helium.
^{85}Kr	krypton 85.
N_2	molecular nitrogen.
NH_3	ammonia.
NMHC	nonmethane hydrocarbon.
NMHCE	nonmethane hydrocarbon equivalent.
NMNEHC	nonmethane-nonethane hydrocarbon.
NO	nitric oxide.
NO_2	nitrogen dioxide.
NO_X	oxides of nitrogen.
N_2O	nitrous oxide.
NMOG	nonmethane organic gases.
NONMHC	non-oxygenated nonmethane hydrocarbon.
NOTHC	non-oxygenated total hydrocarbon.
O_2	molecular oxygen.
OHC	oxygenated hydrocarbon.
^{210}Po	polonium 210.
PM	particulate matter.
S	sulfur.
SVOC	semi-volatile organic compound.
THC	total hydrocarbon.
THCE	total hydrocarbon equivalent.
ZrO_2	zirconium dioxide.

(c) *Prefixes*. This part uses the following prefixes to define a quantity:

Symbol	Quantity	Value
μ	micro	10^{-6}
m	milli	10^{-3}
c	centi	10^{-2}
k	kilo	10^{3}
M	mega	10^{6}

(d) *Superscripts*. This part uses the following superscripts to define a quantity:

Superscript	Quantity
overbar (such as $\bar{y}$).	arithmetic mean.
overdot (such as $\dot{y}$).	quantity per unit time.

(e) *Subscripts*. This part uses the following subscripts to define a quantity:

Subscript	Quantity
abs	absolute quantity.
act	actual condition.
air	air, dry.
amb	ambient.
atmos	atmospheric.
bkgnd	background.
cal	calibration quantity.
CFV	critical flow venturi.
comb	combined.
composite	composite value.
cor	corrected quantity.
dil	dilution air.
dew	dewpoint.
dexh	diluted exhaust.
dry	dry condition.
dutycycle	duty cycle.
exh	raw exhaust.
exp	expected quantity.
fn	feedback speed.
frict	friction.
fuel	fuel consumption.
hi, idle	condition at high-idle.
i	an individual of a series.
idle	condition at idle.
in	quantity in.
init	initial quantity, typically before an emission test.
int	intake air.
j	an individual of a series.
mapped	conditions over which an engine can operate.
max	the maximum (i.e., peak) value expected at the standard over a test interval; not the maximum of an instrument range.
meas	measured quantity.
media	PM sample media.
mix	mixture of diluted exhaust and air.
norm	normalized.
out	quantity out.
P	power.
part	partial quantity.
PDP	positive-displacement pump.
post	after the test interval.
pre	before the test interval.
prod	stoichiometric product.
record	record rate.
ref	reference quantity.
rev	revolution.
sat	saturated condition.
s	slip.
span	span quantity.
SSV	subsonic venturi.
std	standard condition.
stroke	engine strokes per power stroke.
T	torque.
test	test quantity.
test, alt	alternate test quantity.
uncor	uncorrected quantity.
vac	vacuum side of the sampling system.
weight	calibration weight.
zero	zero quantity.

(f) *Constants*. (1) This part uses the following constants for the composition of dry air:

Symbol	Quantity	mol/mol
x_{Arair}	amount of argon in dry air	0.00934
x_{CO2air}	amount of carbon dioxide in dry air	0.000375
x_{N2air}	amount of nitrogen in dry air	0.78084
x_{O2air}	amount of oxygen in dry air	0.209445

(2) This part uses the following molar masses or effective molar masses of chemical species:

Symbol	Quantity	g/mol (10^{-3}·kg·mol^{-1})
M_{air}	molar mass of dry air[1]	28.96559
M_{Ar}	molar mass of argon	39.948
M_{C}	molar mass of carbon	12.0107
M_{CH3OH}	molar mass of methanol	32.04186
M_{C2H5OH}	molar mass of ethanol	46.06844
M_{C2H4O}	molar mass of acetaldehyde	44.05256
M_{CH4N2O}	molar mass of urea	60.05526
M_{C3H8}	molar mass of propane	44.09562
M_{C3H7OH}	molar mass of propanol	60.09502
M_{CO}	molar mass of carbon monoxide	28.0101
M_{CH4}	molar mass of methane	16.0425
M_{CO2}	molar mass of carbon dioxide	44.0095
M_{H}	molar mass of atomic hydrogen	1.00794
M_{H2}	molar mass of molecular hydrogen	2.01588
M_{H2O}	molar mass of water	18.01528
M_{CH2O}	molar mass of formaldehyde	30.02598
M_{He}	molar mass of helium	4.002602
M_{N}	molar mass of atomic nitrogen	14.0067
M_{N2}	molar mass of molecular nitrogen	28.0134
M_{NH3}	molar mass of ammonia	17.03052
M_{NMHC}	effective C_1 molar mass of nonmethane hydrocarbon[2]	13.875389
M_{NMHCE}	effective C_1 molar mass of nonmethane hydrocarbon equivalent[2]	13.875389
M_{NMNEHC}	effective C_1 molar mass of nonmethane-nonethane hydrocarbon[2]	13.875389
M_{NOx}	effective molar mass of oxides of nitrogen[3]	46.0055
M_{N2O}	molar mass of nitrous oxide	44.0128
M_{O}	molar mass of atomic oxygen	15.9994
M_{O2}	molar mass of molecular oxygen	31.9988
M_{S}	molar mass of sulfur	32.065
M_{THC}	effective C_1 molar mass of total hydrocarbon[2]	13.875389
M_{THCE}	effective C_1 molar mass of total hydrocarbon equivalent[2]	13.875389

[1] See paragraph (f)(1) of this section for the composition of dry air.
[2] The effective molar masses of THC, THCE, NMHC, NMHCE, and NMNEHC are defined on a C_1 basis and are based on an atomic hydrogen-to-carbon ratio, α, of 1.85 (with β, γ, and δ equal to zero).
[3] The effective molar mass of NO_X is defined by the molar mass of nitrogen dioxide, NO_2.

(3) This part uses the following molar gas constant for ideal gases:

Symbol	Quantity	J/(mol · K) ($m^2 \cdot kg \cdot s^{-2} \cdot mol^{-1} \cdot K^{-1}$)
R	molar gas constant	8.314472

(4) This part uses the following ratios of specific heats for dilution air and diluted exhaust:

Symbol	Quantity	[J/(kg · K)]/[J/(kg · K)]
γ_{air}	ratio of specific heats for intake air or dilution air	1.399
γ_{dil}	ratio of specific heats for diluted exhaust	1.399
γ_{exh}	ratio of specific heats for raw exhaust	1.385

(g) *Other acronyms and abbreviations.* This part uses the following additional abbreviations and acronyms:

ABS	acrylonitrile-butadiene-styrene.
ASTM	American Society for Testing and Materials.
BMD	bag mini-diluter.
BSFC	brake-specific fuel consumption.
CARB	California Air Resources Board.
CFR	Code of Federal Regulations.
CFV	critical-flow venturi.
CI	compression-ignition.
CITT	Curb Idle Transmission Torque.
CLD	chemiluminescent detector.
CVS	constant-volume sampler.
DF	deterioration factor.
ECM	electronic control module.
EFC	electronic flow control.
e.g	for example.
EGR	exhaust gas recirculation.
EPA	Environmental Protection Agency.
FEL	Family Emission Limit.
FID	flame-ionization detector.
FTIR	Fourier transform infrared.
GC	gas chromatograph.
GC–ECD	gas chromatograph with an electron-capture detector.

GC–FID	gas chromatograph with a flame ionization detector.
HEPA	high-efficiency particulate air.
IBP	initial boiling point.
IBR	incorporated by reference.
i.e	in other words.
ISO	International Organization for Standardization.
LPG	liquefied petroleum gas.
MPD	magnetopneumatic detection.
NDIR	nondispersive infrared.
NDUV	nondispersive ultraviolet.
NIST	National Institute for Standards and Technology.
NMC	nonmethane cutter.
PDP	positive-displacement pump.
PEMS	portable emission measurement system.
PFD	partial-flow dilution.
PLOT	porous layer open tubular.
PMD	paramagnetic detection.
PMP	Polymethylpentene.
pt	a single point at the mean value expected at the standard.
psi	pounds per square inch.
PTFE	polytetrafluoroethylene (commonly known as Teflon ™).
RE	rounding error.
RESS	rechargeable energy storage system.
RFPF	response factor penetration fraction.
RMC	ramped-modal cycle.
rms	root-mean square.
RTD	resistive temperature detector.
SAW	surface acoustic wave.
SEE	standard estimate of error.
SSV	subsonic venturi.
SI	spark-ignition.
THC–FID	total hydrocarbon flame ionization detector.
TINV	inverse student *t*-test function in Microsoft Excel.
UCL	upper confidence limit.
UFM	ultrasonic flow meter.
U.S.C	United States Code.

[79 FR 23815, Apr. 28, 2014, as amended at 81 FR 74191, Oct. 25, 2016]

EFFECTIVE DATE NOTE: At 86 FR 34575, June 29, 2021, § 1065.1005 was amended, effective July 29, 2021.

§ 1065.1010 Incorporation by reference.

(a) Certain material is incorporated by reference into this part with the approval of the Director of the Federal Register under 5 U.S.C. 552(a) and 1 CFR part 51. To enforce any edition other than that specified in this section, a document must be published in the FEDERAL REGISTER and the material must be available to the public. All approved materials are available for inspection at the Air and Radiation Docket and Information Center (Air Docket) in the EPA Docket Center (EPA/DC) at Rm. 3334, EPA West Bldg., 1301 Constitution Ave. NW., Washington, DC. The EPA/DC Public Reading Room hours of operation are 8:30 a.m. to 4:30 p.m., Monday through Friday, excluding legal holidays. The telephone number of the EPA/DC Public Reading Room is (202) 566–1744, and the telephone number for the Air Docket is (202) 566–1742. These approved materials are also available for inspection at the National Archives and Records Administration (NARA).For information on the availability of this material at NARA, email fedreg.legal@nara.gov or go to www.archives.gov/federal-register/cfr/ibr-locations.html. In addition, these materials are available from the sources listed below.

(b) *ASTM material.* The following standards are available from ASTM International, 100 Barr Harbor Dr., P.O. Box C700, West Conshohocken, PA 19428–2959, (877) 909–2786, or *http://www.astm.org*:

(1) ASTM D86–12, Standard Test Method for Distillation of Petroleum Products at Atmospheric Pressure, approved December 1, 2012 (''ASTM D86''), IBR approved for §§ 1065.703(b) and 1065.710(b) and (c).

(2) ASTM D93–13, Standard Test Methods for Flash Point by Pensky-Martens Closed Cup Tester, approved July 15, 2013 (''ASTM D93''), IBR approved for § 1065.703(b).

(3) ASTM D130–12, Standard Test Method for Corrosiveness to Copper from Petroleum Products by Copper Strip Test, approved November 1, 2012 (''ASTM D130''), IBR approved for § 1065.710(b).

(4) ASTM D381–12, Standard Test Method for Gum Content in Fuels by Jet Evaporation, approved April 15, 2012 (''ASTM D381''), IBR approved for § 1065.710(b).

(5) ASTM D445–12, Standard Test Method for Kinematic Viscosity of Transparent and Opaque Liquids (and Calculation of Dynamic Viscosity), approved April 15, 2012 (''ASTM D445''), IBR approved for § 1065.703(b).

(6) ASTM D525–12a, Standard Test Method for Oxidation Stability of Gasoline (Induction Period Method), approved September 1, 2012 (''ASTM D525''), IBR approved for § 1065.710(b).

(7) ASTM D613–13, Standard Test Method for Cetane Number of Diesel Fuel Oil, approved December 1, 2013 (''ASTM D613''), IBR approved for § 1065.703(b).

(8) ASTM D910–13a, Standard Specification for Aviation Gasolines, approved December 1, 2013 (''ASTM D910''), IBR approved for § 1065.701(f).

(9) ASTM D975–13a, Standard Specification for Diesel Fuel Oils, approved December 1, 2013 (''ASTM D975''), IBR approved for § 1065.701(f).

(10) ASTM D1267–12, Standard Test Method for Gage Vapor Pressure of Liquefied Petroleum (LP) Gases (LP-Gas Method), approved

November 1, 2012 (''ASTM D1267''), IBR approved for § 1065.720(a).

(11) ASTM D1319–13, Standard Test Method for Hydrocarbon Types in Liquid Petroleum Products by Fluorescent Indicator Adsorption, approved May 1, 2013 (''ASTM D1319''), IBR approved for § 1065.710(c).

(12) ASTM D1655–13a, Standard Specification for Aviation Turbine Fuels, approved December 1, 2013 (''ASTM D1655''), IBR approved for § 1065.701(f).

(13) ASTM D1837–11, Standard Test Method for Volatility of Liquefied Petroleum (LP) Gases, approved October 1, 2011 (''ASTM D1837''), IBR approved for § 1065.720(a).

(14) ASTM D1838–12a, Standard Test Method for Copper Strip Corrosion by Liquefied Petroleum (LP) Gases, approved December 1, 2012 (''ASTM D1838''), IBR approved for § 1065.720(a).

(15) ASTM D1945–03 (Reapproved 2010), Standard Test Method for Analysis of Natural Gas by Gas Chromatography, approved January 1, 2010 (''ASTM D1945''), IBR approved for § 1065.715(a).

(16) ASTM D2158–11, Standard Test Method for Residues in Liquefied Petroleum (LP) Gases, approved January 1, 2011 (''ASTM D2158''), IBR approved for § 1065.720(a).

(17) ASTM D2163–07, Standard Test Method for Determination of Hydrocarbons in Liquefied Petroleum (LP) Gases and Propane/Propene Mixtures by Gas Chromatography, approved December 1, 2007 (''ASTM D2163''), IBR approved for § 1065.720(a).

(18) ASTM D2598–12, Standard Practice for Calculation of Certain Physical Properties of Liquefied Petroleum (LP) Gases from Compositional Analysis, approved November 1, 2012 (''ASTM D2598''), IBR approved for § 1065.720(a).

(19) ASTM D2622–16, Standard Test Method for Sulfur in Petroleum Products by Wavelength Dispersive X-ray Fluorescence Spectrometry, approved January 1, 2016 (''ASTM D2622''), IBR approved for §§ 1065.703(b) and 1065.710(b) and (c).

(20) ASTM D2699–13b, Standard Test Method for Research Octane Number of Spark-Ignition Engine Fuel, approved October 1, 2013 (''ASTM D2699''), IBR approved for § 1065.710(b).

(21) ASTM D2700–13b, Standard Test Method for Motor Octane Number of Spark-Ignition Engine Fuel, approved October 1, 2013 (''ASTM D2700''), IBR approved for § 1065.710(b).

(22) ASTM D2713–13, Standard Test Method for Dryness of Propane (Valve Freeze Method), approved October 1, 2013 (''ASTM D2713''), IBR approved for § 1065.720(a).

(23) ASTM D2784–11, Standard Test Method for Sulfur in Liquefied Petroleum Gases (Oxy-Hydrogen Burner or Lamp), approved January 1, 2011 (''ASTM D2784''), IBR approved for § 1065.720(a).

(24) ASTM D2880–13b, Standard Specification for Gas Turbine Fuel Oils, approved November 15, 2013 (''ASTM D2880''), IBR approved for § 1065.701(f).

(25) ASTM D2986–95a, Standard Practice for Evaluation of Air Assay Media by the Monodisperse DOP (Dioctyl Phthalate) Smoke Test, approved September 10, 1995 (''ASTM D2986''), IBR approved for § 1065.170(c). (Note: This standard was withdrawn by ASTM.)

(26) ASTM D3231–13, Standard Test Method for Phosphorus in Gasoline, approved June 15, 2013 (''ASTM D3231''), IBR approved for § 1065.710(b) and (c).

(27) ASTM D3237–12, Standard Test Method for Lead in Gasoline By Atomic Absorption Spectroscopy, approved June 1, 2012 (''ASTM D3237''), IBR approved for § 1065.710(b) and (c).

(28) ASTM D4052–11, Standard Test Method for Density, Relative Density, and API Gravity of Liquids by Digital Density Meter, approved October 15, 2011 (''ASTM D4052''), IBR approved for § 1065.703(b).

(29) ASTM D4629–12, Standard Test Method for Trace Nitrogen in Liquid Petroleum Hydrocarbons by Syringe/Inlet Oxidative Combustion and Chemiluminescence Detection, approved April 15, 2012 (''ASTM D4629''), IBR approved for § 1065.655(e).

(30) ASTM D4814–13b, Standard Specification for Automotive Spark-Ignition Engine Fuel, approved December 1, 2013 (''ASTM D4814''), IBR approved for § 1065.701(f).

(31) ASTM D4815–13, Standard Test Method for Determination of MTBE, ETBE, TAME, DIPE, tertiary-Amyl Alcohol and C_1 to C_4 Alcohols in Gasoline by Gas Chromatography, approved October 1, 2013 (''ASTM D4815''), IBR approved for § 1065.710(b).

(32) ASTM D5186–03 (Reapproved 2009), Standard Test Method for Determination of the Aromatic Content and Polynuclear Aromatic Content of Diesel Fuels and Aviation Turbine Fuels By Supercritical Fluid Chromatography, approved April 15, 2009 (''ASTM D5186''), IBR approved for § 1065.703(b).

(33) ASTM D5191–13, Standard Test Method for Vapor Pressure of Petroleum Products (Mini Method), approved December 1, 2013 (''ASTM D5191''), IBR approved for § 1065.710(b) and (c).

(34) ASTM D5291–10, Standard Test Methods for Instrumental Determination of Carbon, Hydrogen, and Nitrogen in Petroleum Products and Lubricants, approved May 1, 2010 (''ASTM D5291''), IBR approved for § 1065.655(e).

(35) ASTM D5453–19a, Standard Test Method for Determination of Total Sulfur in Light Hydrocarbons, Spark Ignition Engine Fuel, Diesel Engine Fuel, and Engine Oil by Ultraviolet Fluorescence, approved July 1, 2019 (''ASTM D5453''), IBR approved for §§ 1065.703(b) and 1065.710(b).

(36) ASTM D5599–00 (Reapproved 2010), Standard Test Method for Determination of

Oxygenates in Gasoline by Gas Chromatography and Oxygen Selective Flame Ionization Detection, approved October 1, 2010 (''ASTM D5599''), IBR approved for §§ 1065.655(e) and 1065.710(b).

(37) ASTM D5762–12 Standard Test Method for Nitrogen in Petroleum and Petroleum Products by Boat-Inlet Chemiluminescence, approved April 15, 2012 (''ASTM D5762''), IBR approved for § 1065.655(e).

(38) ASTM D5769–10, Standard Test Method for Determination of Benzene, Toluene, and Total Aromatics in Finished Gasolines by Gas Chromatography/Mass Spectrometry, approved May 1, 2010 (''ASTM D5769''), IBR approved for § 1065.710(b).

(39) ASTM D5797–13, Standard Specification for Fuel Methanol (M70- M85) for Automotive Spark-Ignition Engines, approved June 15, 2013 (''ASTM D5797''), IBR approved for § 1065.701(f).

(40) ASTM D5798–13a, Standard Specification for Ethanol Fuel Blends for Flexible Fuel Automotive Spark-Ignition Engines, approved June 15, 2013 (''ASTM D5798''), IBR approved for § 1065.701(f).

(41) ASTM D6348–12$^{\varepsilon 1}$, Standard Test Method for Determination of Gaseous Compounds by Extractive Direct Interface Fourier Transform Infrared (FTIR) Spectroscopy, approved February 1, 2012 (''ASTM D6348''), IBR approved for §§ 1065.266(b) and 1065.275(b).

(42) ASTM D6550–10, Standard Test Method for Determination of Olefin Content of Gasolines by Supercritical-Fluid Chromatography, approved October 1, 2010 (''ASTM D6550''), IBR approved for § 1065.710(b).

(43) ASTM D6615–11a, Standard Specification for Jet B Wide-Cut Aviation Turbine Fuel, approved October 1, 2011 (''ASTM D6615''), IBR approved for § 1065.701(f).

(44) ASTM D6751–12, Standard Specification for Biodiesel Fuel Blend Stock (B100) for Middle Distillate Fuels, approved August 1, 2012 (''ASTM D6751''), IBR approved for § 1065.701(f).

(45) ASTM D6985–04a, Standard Specification for Middle Distillate Fuel Oil—Military Marine Applications, approved November 1, 2004 (''ASTM D6985''), IBR approved for § 1065.701(f). (NOTE: This standard was withdrawn by ASTM.)

(46) ASTM D7039–15a (Reapproved 2020), Standard Test Method for Sulfur in Gasoline, Diesel Fuel, Jet Fuel, Kerosine, Biodiesel, Biodiesel Blends, and Gasoline-Ethanol Blends by Monochromatic Wavelength Dispersive X-ray Fluorescence Spectrometry, approved May 1, 2020 (''ASTM D7039''), IBR approved for §§ 1065.703(b) and 1065.710(b).

(47) ASTM F1471–09, Standard Test Method for Air Cleaning Performance of a High- Efficiency Particulate Air Filter System, approved March 1, 2009 (''ASTM F1471''), IBR approved for § 1065.1001.

(c) *California Air Resources Board material*. The following documents are available from the California Air Resources Board, Haagen-Smit Laboratory, 9528 Telstar Ave., El Monte, CA 91731–2908, (800) 242–4450, or *http://www.arb.ca.gov*:

(1) California Non-Methane Organic Gas Test Procedures, Amended July 30, 2002, Mobile Source Division, California Air Resources Board, IBR approved for § 1065.805(f).

(2) [Reserved]

(d) *Institute of Petroleum material*. The following documents are available from the Energy Institute, 61 New Cavendish St., London, W1G 7AR, UK, or by calling + 44–(0)20–7467–7100, or at *http://www.energyinst.org*:

(1) IP–470, 2005, Determination of aluminum, silicon, vanadium, nickel, iron, calcium, zinc, and sodium in residual fuels by atomic absorption spectrometry, IBR approved for § 1065.705(b).

(2) IP–500, 2003, Determination of the phosphorus content of residual fuels by ultra-violet spectrometry, IBR approved for § 1065.705(b).

(3) IP–501, 2005, Determination of aluminum, silicon, vanadium, nickel, iron, sodium, calcium, zinc and phosphorus in residual fuel oil by ashing, fusion and inductively coupled plasma emission spectrometry, IBR approved for § 1065.705(b).

(e) *ISO material*. The following standards are available from the International Organization for Standardization, 1, ch. de la Voie-Creuse, CP 56, CH–1211 Geneva 20, Switzerland, 41–22–749–01–11, or *http://www.iso.org*:

(1) ISO 2719:2002, Determination of flash point—Pensky-Martens closed cup method (''ISO 2719''), IBR approved for § 1065.705(c).

(2) ISO 3016:1994, Petroleum products—Determination of pour point (''ISO 3016''), IBR approved for § 1065.705(c).

(3) ISO 3104:1994/Cor 1:1997, Petroleum products—Transparent and opaque liquids—Determination of kinematic viscosity and calculation of dynamic viscosity (''ISO 3104''), IBR approved for § 1065.705(c).

(4) ISO 3675:1998, Crude petroleum and liquid petroleum products—Laboratory determination of density—Hydrometer method (''ISO 3675''), IBR approved for § 1065.705(c).

(5) ISO 3733:1999, Petroleum products and bituminous materials—Determination of water—Distillation method (''ISO 3733''), IBR approved for § 1065.705(c).

(6) ISO 6245:2001, Petroleum products—Determination of ash (''ISO 6245''), IBR approved for § 1065.705(c).

(7) ISO 8217:2012(E), Petroleum products—Fuels (class F)—Specifications of marine fuels, Fifth edition, August 15, 2012 (''ISO 8217''), IBR approved for § 1065.705(b) and (c).

(8) ISO 8754:2003, Petroleum products—Determination of sulfur content—Energy-dispersive X-ray Fluorescence spectrometry (''ISO 8754''), IBR approved for § 1065.705(c).

(9) ISO 10307–2(E):2009, Petroleum products—Total sediment in residual fuel oils—Part 2: Determination using standard procedures for ageing, Second Ed., February 1, 2009 (''ISO 10307''), as modified by ISO 10307–2:2009/Cor.1:2010(E), Technical Corrigendum 1, published May 15, 2010, IBR approved for § 1065.705(c).

(10) ISO 10370:1993/Cor 1:1996, Petroleum products—Determination of carbon residue—Micro method (''ISO 10370''), IBR approved for § 1065.705(c).

(11) ISO 10478:1994, Petroleum products—Determination of aluminium and silicon in fuel oils—Inductively coupled plasma emission and atomic absorption spectroscopy methods (''ISO 10478''), IBR approved for § 1065.705(c).

(12) ISO 12185:1996/Cor 1:2001, Crude petroleum and petroleum products—Determination of density—Oscillating U-tube method (''ISO 12185''), IBR approved for § 1065.705(c).

(13) ISO 14596:2007, Petroleum products—Determination of sulfur content—Wavelength-dispersive X-ray fluorescence spectrometry (''ISO 14596''), IBR approved for § 1065.705(c).

(14) ISO 14597:1997, Petroleum products—Determination of vanadium and nickel content—Wavelength dispersive X-ray fluorescence spectrometry (''ISO 14597''), IBR approved for § 1065.705(c).

(15) ISO 14644–1:1999, Cleanrooms and associated controlled environments (''ISO 14644''), IBR approved for § 1065.190(b).

(f) *NIST material.* The following documents are available from National Institute of Standards and Technology, 100 Bureau Drive, Stop 1070, Gaithersburg, MD 20899–1070, (301) 975–6478, or *www.nist.gov*:

(1) NIST Special Publication 811, 2008 Edition, Guide for the Use of the International System of Units (SI), March 2008, IBR approved for §§ 1065.20(a) and 1065.1005.

(2) NIST Technical Note 1297, 1994 Edition, Guidelines for Evaluating and Expressing the Uncertainty of NIST Measurement Results, IBR approved for § 1065.1001.

(g) *SAE International material.* The following standards are available from SAE International, 400 Commonwealth Dr., Warrendale, PA 15096–0001, (724) 776–4841, or *http://www.sae.org*:

(1) SAE 770141, 1977, Optimization of Flame Ionization Detector for Determination of Hydrocarbon in Diluted Automotive Exhausts, Glenn D. Reschke, IBR approved for § 1065.360(c).

(2) SAE J1151, Methane Measurement Using Gas Chromatography, stabilized September 2011, IBR approved for §§ 1065.267(b) and 1065.750(a).

[79 FR 23818, Apr. 28, 2014, as amended at 81 FR 74193, Oct. 25, 2016; 85 FR 78468, Dec. 4, 2020]

EFFECTIVE DATE NOTE: At 86 FR 34579, June 29, 2021, § 1065.1010 was amended, effective July 29, 2021.

Subpart L—Methods for Unregulated and Special Pollutants

SOURCE: 79 FR 23820, Apr. 28, 2014, unless otherwise noted.

§ 1065.1101 Applicability.

This subpart specifies procedures that may be used to measure emission constituents that are not measured (or not separately measured) by the test procedures in the other subparts of this part. These procedures are included to facilitate consistent measurement of unregulated pollutants for purposes other than compliance with emission standards. Unless otherwise specified in the standard-setting part, use of these procedures is optional and does not replace any requirements in the rest of this part.

SEMI-VOLATILE ORGANIC COMPOUNDS

§ 1065.1103 General provisions for SVOC measurement.

The provisions of §§ 1065.1103 through 1065.1111 specify procedures for measuring semi-volatile organic compounds (SVOC) along with PM. These sections specify how to collect a sample of the SVOCs during exhaust emission testing, as well as how to use wet chemistry techniques to extract SVOCs from the sample media for analysis. Note that the precise method you use will depend on the category of SVOCs being measured. For example, the method used to measure polynuclear aromatic hydrocarbons (PAHs) will differ slightly from the method used to measure dioxins. Follow standard analytic

chemistry methods for any aspects of the analysis that are not specified.

(a) Laboratory cleanliness is especially important throughout SVOC testing. Thoroughly clean all sampling system components and glassware before testing to avoid sample contamination. For the purposes of this subpart, the sampling system is defined as sample pathway from the sample probe inlet to the downstream most point where the sample is captured (in this case the condensate trap).

(b) We recommend that media blanks be analyzed for each batch of sample media (sorbent, filters, etc.) prepared for testing. Blank sorbent modules (i.e., field blanks) should be stored in a sealed environment and should periodically accompany the test sampling system throughout the course of a test, including sampling system and sorbent module disassembly, sample packaging, and storage. Use good engineering judgment to determine the frequency with which you should generate field blanks. The field blank sample should be close to the sampler during testing.

(c) We recommend the use of isotope dilution techniques, including the use of isotopically labeled surrogate, internal, alternate, and injection standards.

(d) If your target analytes degrade when exposed to ultraviolet radiation, such as nitropolynuclear aromatic hydrocarbons (nPAHs), perform these procedures in the dark or with ultraviolet filters installed over the lights.

(e) The following definitions and abbreviations apply for SVOC measurements:

(1) *Soxhlet extraction* means the extraction method invented by Franz von Soxhlet, in which the sample is placed in a thimble and rinsed repeatedly with a recycle of the extraction solvent.

(2) *XAD–2* means a hydrophobic crosslinked polystyrene copolymer resin adsorbent known commercially as Amberlite® XAD®-2, or an equivalent adsorbent like XAD–4.

(3) *Semi-volatile organic compound (SVOC)* means an organic compound that is sufficiently volatile to exist in vapor form in engine exhaust, but that readily condenses to liquid or solid form under atmospheric conditions. Most SVOCs have at least 14 carbon atoms per molecule or they have a boiling point between (240 and 400) °C. SVOCs include dioxin, quinone, and nitro-PAH compounds. They may be a natural byproduct of combustion or they may be created post-combustion. Note that SVOCs may be included in measured values of hydrocarbons and/or PM using the procedures specified in this part.

(4) *Kuderna-Danish concentrator* means laboratory glassware known by this name that consists of an air-cooled condenser on top of an extraction bulb.

(5) *Dean-Stark trap* means laboratory glassware known by this name that uses a reflux condenser to collect water from samples extracted under reflux.

(6) *PUF* means polyurethane foam.

(7) *Isotopically labeled* means relating to a compound in which either all the hydrogen atoms are replaced with the atomic isotope hydrogen-2 (deuterium) or one of the carbon atoms at a defined position in the molecule is replaced with the atomic isotope carbon-13.

§ 1065.1105 Sampling system design.

(a) *General*. We recommend that you design your SVOC batch sampler to extract sample from undiluted emissions to maximize the sampled SVOC quantity. If you dilute your sample, we recommend using annular dilution. If you dilute your sample, but do not use annular dilution, you must precondition your sampling system to reach equilibrium with respect to loss and re-entrainment of SVOCs to the walls of the sampling system. To the extent practical, adjust sampling times based on the emission rate of target analytes from the engine to obtain analyte concentrations above the detection limit. In some instances you may need to run repeat test cycles without replacing the sample media or disassembling the batch sampler.

(b) *Sample probe, transfer lines, and sample media holder design and construction*. The sampling system should consist of a sample probe, transfer line, PM filter holder, cooling coil, sorbent module, and condensate trap. Construct sample probes, transfer lines, and sample media holders that have inside surfaces of nickel, titanium or another nonreactive material capable of

withstanding raw exhaust gas temperatures. Seal all joints in the hot zone of the system with gaskets made of nonreactive material similar to that of the sampling system components. You may use teflon gaskets in the cold zone. We recommend locating all components as close to probes as practical to shorten sampling system length and minimize the surface exposed to engine exhaust.

(c) *Sample system configuration.* This paragraph (c) specifies the components necessary to collect SVOC samples, along with our recommended design parameters. Where you do not follow our recommendations, use good engineering judgment to design your sampling system so it does not result in loss of SVOC during sampling. The sampling system should contain the following components in series in the order listed:

(1) Use a sample probe similar to the PM sample probe specified in subpart B of this part.

(2) Use a PM filter holder similar to the holder specified in subpart B of this part, although you will likely need to use a larger size to accommodate the high sample flow rates. We recommend using a 110 mm filter for testing spark ignition engines or engines that utilize exhaust aftertreatment for PM removal and a 293 mm filter for other engines. If you are not analyzing separately for SVOCs in gas and particle phases, you do not have to control the temperature of the filter holder. Note that this differs from normal PM sampling procedures, which maintain the filter at a much lower temperature to capture a significant fraction of exhaust SVOC on the filter. In this method, SVOCs that pass through the filter will be collected on the downstream sorbent module. If you are collecting SVOCs in gas and particle phases, control your filter face temperature according to § 1065.140(e)(4).

(3) Use good engineering judgment to design a cooling coil that will drop the sample temperature to approximately 5 °C. Note that downstream of the cooling coil, the sample will be a mixture of vapor phase hydrocarbons in CO_2, air, and a primarily aqueous liquid phase.

(4) Use a hydrophobic sorbent in a sealed sorbent module. Note that this sorbent module is intended to be the final stage for collecting the SVOC sample and should be sized accordingly. We recommend sizing the module to hold 40 g of XAD–2 along with PUF plugs at either end of the module, noting that you may vary the mass of XAD used for testing based on the anticipated SVOC emission concentration and sample flow rate.

(5) Include a condensate trap to separate the aqueous liquid phase from the gas stream. We recommend using a peristaltic pump to remove water from the condensate trap over the course of the test to prevent build-up of the condensate. Note that for some tests it may be appropriate to collect this water for analysis.

(d) *Sampler flow control.* For testing using the recommended filter and sorbent module sizes, we recommend targeting an average sample flow rate of 70 liters per minute to maximize SVOC collection. The sampler must be designed to maintain proportional sampling throughout the test. Verify proportional sampling after an emission test as described in § 1065.545.

(e) *Water bath.* Design the sample system with a water bath in which the cooling coil, sorbent module, and condensate trap will be submerged. Use a heat exchanger or ice to maintain the bath temperature at (3 to 7) °C.

[79 FR 23820, Apr. 28, 2014, as amended at 81 FR 74195, Oct. 25, 2016]

§ 1065.1107 Sample media and sample system preparation; sample system assembly.

This section describes the appropriate types of sample media and the cleaning procedure required to prepare the media and wetted sample surfaces for sampling.

(a) *Sample media.* The sampling system uses two types of sample media in series: The first to simultaneously capture the PM and associated particle phase SVOCs, and a second to capture SVOCs that remain in the gas phase, as follows:

(1) For capturing PM, we recommend using pure quartz filters with no binder if you are not analyzing separately for SVOCs in gas and particle phases. If you are analyzing separately, you must

use polytetrafluoroethylene (PTFE) filters with PTFE support. Select the filter diameter to minimize filter change intervals, accounting for the expected PM emission rate, sample flow rate. Note that when repeating test cycles to increase sample mass, you may replace the filter without replacing the sorbent or otherwise disassembling the batch sampler. In those cases, include all filters in the extraction.

(2) For capturing gaseous SVOCs, utilize XAD–2 resin with or without PUF plugs. Note that two PUF plugs are typically used to contain the XAD–2 resin in the sorbent module.

(b) *Sample media and sampler preparation*. Prepare pre-cleaned PM filters and pre-cleaned PUF plugs/XAD–2 as needed. Store sample media in containers protected from light and ambient air if you do not use them immediately after cleaning. Use the following preparation procedure, or an analogous procedure with different solvents and extraction times:

(1) Pre-clean the filters via Soxhlet extraction with methylene chloride for 24 hours and dry over dry nitrogen in a low-temperature vacuum oven.

(2) Pre-clean PUF and XAD–2 with a series of Soxhlet extractions: 8 hours with water, 22 hours with methanol, 22 hours with methylene chloride, and 22 hours with toluene, followed by drying with nitrogen.

(3) Clean sampler components, including the probe, filter holder, condenser, sorbent module, and condensate collection vessel by rinsing three times with methylene chloride and then three times with toluene. Prepare pre-cleaned aluminum foil for capping the probe inlet of the sampler after the sampling system has been assembled.

(c) *Sorbent spiking*. Use good engineering judgment to verify the extent to which your extraction methods recover SVOCs absorbed on the sample media. We recommend spiking the XAD–2 resin with a surrogate standard before testing with a carbon-13 or hydrogen-2 isotopically labeled standard for each of the class of analytes targeted for analysis. Perform this spiking as follows:

(1) Insert the lower PUF plug into the bottom of the sorbent module.

(2) Add half of one portion of XAD–2 resin to the module and spike the XAD–2 in the module with the standard.

(3) Wait 1 hour for the solvent from the standard(s) to evaporate, add the remaining 20 g of the XAD–2 resin to the module, and then insert a PUF plug in the top of the sorbent module.

(4) Cover the inlet and outlet of the sorbent module with pre-cleaned aluminum foil.

(d) *Sampling system assembly*. After preparing the sample media and the sampler, assemble the condensate trap, cooling coil, filter holder with filter, sample probe, and sorbent module, then lower the assembly into the reservoir. Cover the probe inlet with pre-cleaned aluminum foil.

[79 FR 23820, Apr. 28, 2014, as amended at 81 FR 74195, Oct. 25, 2016]

§ 1065.1109 Post-test sampler disassembly and sample extraction.

This section describes the process for disassembling and rinsing the sampling system and extracting and cleaning up the sample.

(a) *Sampling system disassembly*. Disassemble the sampling system in a clean environment as follows after the test:

(1) Remove the PM filter, PUF plugs, and all the XAD–2 from the sampling system and store them at or below 5 °C until analysis.

(2) Rinse sampling system wetted surfaces upstream of the condensate trap with acetone followed by toluene (or a comparable solvent system), ensuring that all the solvent remaining in liquid phase is collected (note that a fraction of the acetone and toluene will likely be lost to evaporation during mixing). Rinse with solvent volumes that are sufficient to cover all the surfaces exposed to the sample during testing. We recommend three fresh solvent rinses with acetone and two with toluene. We recommend rinse volumes of 60 ml per rinse for all sampling system components except the condenser coil, of which you should use 200 ml per rinse. Keep the acetone rinsate separate from the toluene rinsate to the extent practicable. Rinsate fractions should be stored separately in glass bottles that have been pre-rinsed with

acetone, hexane, and toluene (or purchase pre-cleaned bottles).

(3) Use good engineering judgment to determine if you should analyze the aqueous condensate phase for SVOCs. If you determine that analysis is necessary, use toluene to perform a liquid-liquid extraction of the SVOCs from the collected aqueous condensate using a separatory funnel or an equivalent method. Add the toluene from this aqueous extraction to the toluene rinsate fraction described in paragraph (a)(2) of this section.

(4) Reduce rinsate solvent volumes as needed using a Kuderna-Danish concentrator or rotary evaporator and retain these rinse solvents for reuse during sample media extraction for the same test. Be careful to avoid loss of low molecular weight analytes when concentrating with rotary evaporation.

(b) *Sample extraction*. Extract the SVOCs from the sorbent using Soxhlet extraction as described in this paragraph (b). Two 16 hour extractions are necessary to accommodate the Soxhlet extractions of all SVOCs from a single sample. This reduces the possibility of losing low molecular weight SVOCs and promotes water removal. We recommend performing the first extraction with acetone/hexane and the second using toluene (or an equivalent solvent system). You may alternatively use an equivalent method such as an automated solvent extractor.

(1) We recommend equipping the Soxhlet extractor with a Dean-Stark trap to facilitate removal of residual water from the sampling system rinse. The Soxhlet apparatus must be large enough to allow extraction of the PUF, XAD–2, and filter in a single batch. Include in the extractor setup a glass thimble with a coarse or extra coarse sintered glass bottom. Pre-clean the extractor using proper glass-cleaning procedures. We recommend that the Soxhlet apparatus be cleaned with a (4 to 8) hour Soxhlet extraction with methylene chloride at a cycling rate of three cycles per hour. Discard the solvent used for pre-cleaning (no analysis is necessary).

(2) Load the extractor thimble before placing it in the extractor by first rolling the PM filter around the inner circumference of the thimble, with the sampled side facing in. Push one PUF plug down into the bottom of the thimble, add approximately half of the XAD–2, and then spike the XAD–2 in the thimble with the isotopically labeled extraction standards of known mass. Target the center of the XAD–2 bed for delivering the extraction standard. We recommend using multiple isotopically labeled extraction standards that cover the range of target analytes. This generally means that you should use isotopically labeled standards at least for the lowest and highest molecular weight analytes for each category of compounds (such as PAHs and dioxins). These extraction standards monitor the efficiency of the extraction and are also used to determine analyte concentrations after analysis. Upon completion of spiking, add the remaining XAD–2 to the thimble, insert the remaining PUF plug, and place the thimble into the extractor. Note that if you are collecting and analyzing for SVOCs in gas and particle phases, perform separate extractions for the filter and XAD–2.

(3) For the initial extraction, combine the concentrated acetone rinses (from the sampling system in paragraph (a) of this section) with enough hexane to bring the solvent volume up to the target level of 700 ml. Assemble the extractor and turn on the heating controls and cooling water. Allow the sample to reflux for 16 hours with the rheostat adjusted to cycle the extraction at a rate of (3.0 ±0.5) cycles per hour. Drain the water from the Dean-Stark trap as it accumulates by opening the stopcock on the trap. Set aside the water for analysis or discard it. In most cases, any water present will be removed within approximately 2 hours after starting the extraction.

(4) After completing the initial extraction, remove the solvent and concentrate it to (4.0 ±0.5) ml using a Kuderna-Danish concentrator that includes a condenser such as a three-ball Snyder column with venting dimples and a graduated collection tube. Hold the water bath temperature at (75 to 80) °C. Using this concentrator will minimize evaporative loss of analytes with lower molecular weight.

(i) Rinse the round bottom flask of the extractor with (60 to 100) ml of

hexane and add the rinsate to this concentrated extract.

(ii) Concentrate the mixture to (4 ±0.5) ml using a Kuderna-Danish concentrator or similar apparatus.

(iii) Repeat the steps in paragraphs (b)(4)(i) and (ii) of this section three times, or as necessary to remove all the residual solvent from the round bottom flask of the extractor, concentrating the final rinsate to (4 ±0.5) ml.

(5) For the second extraction, combine the toluene rinses (from the sampling system in paragraph (a) of this section) with any additional toluene needed to bring the solvent volume up to the target level of 700 ml. As noted in paragraph (a) of this section, you may need to concentrate the rinsate before adding it to the extraction apparatus if the rinsate solvent volume is too large. Allow the sample to reflux for 16 hours with the rheostat adjusted to cycle the extraction at a rate of (3.0 ±0.5) cycles per hour. Check the Dean-Stark trap for water during the first 2 hours of the extraction (though little or no water should be present during this stage).

(6) Upon completion of the second extraction, remove the solvent and concentrate it to (4 ±0.5) ml as described in paragraph (b)(4) of this section. Using hexane from paragraph (b)(4) of this section as the rinse solvent effectively performs a solvent exchange of toluene with hexane.

(7) Combine the concentrated extract from paragraph (b)(4) of this section with the concentrated extract from paragraph (b)(6) of this section. Divide the extract into a number of fractions based on the number of analyses you need to perform. Perform the separate sample clean-up described in paragraph (c) of this section as needed for each fraction.

(c) *Sample clean-up*. This paragraph (c) describes how to perform sample cleaning to remove from the sample extract any solids and any SVOCs that will not be analyzed. This process, known as ''sample clean-up'', reduces the potential for interference or co-elution of peaks during analytical analysis. Before performing the sample clean-up, spike the extract with an alternate standard that contains a known mass of isotopically labeled compounds that are identical to the target analytes (except for the labeling). The category of the target analyte compounds (such as PAHs or dioxin) will determine the number of compounds that make up the standard. For example, PAHs require the use of four compounds in the alternate standard to cover the four basic ring structures of PAHs (2-ring, 3-ring, 4-ring, and 5-ring structures). These alternate standards are used to monitor the efficiency of the clean-up procedure. Before sample clean-up, concentrate the fractionated sample to about 2 ml with a Kuderna-Danish concentrator or rotary evaporator, and then transfer the extract to an 8 ml test tube with hexane rinse. Concentrate it to a volume of about 1 ml using a Kuderna-Danish concentrator. Use good engineering judgment to select an appropriate column chromatographic clean-up option for your target analytes. Note that these clean-up techniques generally remove compounds based on their polarity. The following procedures are examples of clean-up techniques for PAHs and nPAHs.

(1) *PAH clean-up*. The following method is appropriate for clean-up of extracts intended for analysis of PAHs:

(i) Pack a glass gravity column (250 mm × 10 mm recommended) by inserting a clean glass wool plug into the bottom of the column and add 10 g of activated silica gel in methylene chloride. Tap the column to settle the silica gel and then add a 1 cm layer of anhydrous sodium sulfate. Verify the volume of solvent required to completely elute all the PAHs and adjust the weight of the silica gel accordingly to account for variations among batches of silica gel that may affect the elution volume of the various PAHs.

(ii) Elute the column with 40 ml of hexane. The rate for all elutions should be about 2 ml/min. You may increase the elution rate by using dry air or nitrogen to maintain the headspace slightly above atmospheric pressure. Discard the eluate just before exposing the sodium sulfate layer to the air or nitrogen and transfer the 1 ml sample extract onto the column using two additional 2 ml rinses of hexane. Just before exposing the sodium sulfate layer to the air or nitrogen, begin elution of

the column with 25 ml of hexane followed by 25 ml of 40 volume % methylene chloride in hexane. Collect the entire eluate and concentrate it to about 5 ml using the Kuderna-Danish concentrator or a rotary evaporator. Make sure not to evaporate all the solvent from the extract during the concentration process. Transfer the eluate to a small sample vial using a hexane rinse and concentrate it to 100 µl using a stream of nitrogen without violently disturbing the solvent. Store the extracts in a refrigerator at or below 4 °C, and away from light.

(2) *nPAH clean up*. The following procedure, adapted from ''Determination and Comparison of Nitrated-Polycyclic Aromatic Hydrocarbons Measured in Air and Diesel Particulate Reference Materials'' (Bamford, H.A., *et al*, Chemosphere, Vol. 50, Issue 5, pages 575–587), is an appropriate method to clean up extracts intended for analysis of nPAHs:

(i) Condition an aminopropyl solid phase extraction (SPE) cartridge by eluting it with 20 ml of 20 volume % methylene chloride in hexane. Transfer the extract quantitatively to the SPE cartridge with at least two methylene chloride rinses. Elute the extract through the SPE cartridge by using 40 ml of 20 volume % methylene chloride in hexane to minimize potential interference of polar constituents, and then reduce the extract to 0.5 ml in hexane and subject it to normal-phase liquid chromatography using a pre-prepared 9.6 mm × 25 cm semi-preparative Chromegabond® amino/cyano column (5 µm particle size) to isolate the nPAH fraction. The mobile phase is 20 volume % methylene chloride in hexane at a constant flow rate of 5 ml per minute. Back-flash the column with 60 ml of methylene chloride and then condition it with 200 ml of 20 volume % methylene chloride in hexane before each injection. Collect the effluent and concentrate it to about 2 ml using the Kuderna-Danish concentrator or a rotary evaporator. Transfer it to a minivial using a hexane rinse and concentrate it to 100 µl using a gentle stream of nitrogen. Store the extracts at or below 4 °C, and away from light.

(ii) [Reserved]

[79 FR 23820, Apr. 28, 2014, as amended at 81 FR 74195, Oct. 25, 2016]

§ 1065.1111 Sample analysis.

This subpart does not specify chromatographic or analytical methods to analyze extracts, because the appropriateness of such methods is highly dependent on the nature of the target analytes. However, we recommend that you spike the extract with an injection standard that contains a known mass of an isotopically labeled compound that is identical to one of the target analytes (except for labeling). This injection standard allows you to monitor the efficiency of the analytical process by verifying the volume of sample injected for analysis.

PART 1066—VEHICLE-TESTING PROCEDURES

Subpart A—Applicability and General Provisions

Sec.
1066.1 Applicability.
1066.2 Submitting information to EPA under this part.
1066.5 Overview of this part 1066 and its relationship to the standard-setting part.
1066.10 Other procedures.
1066.15 Overview of test procedures.
1066.20 Units of measure and overview of calculations.
1066.25 Recordkeeping.

Subpart B—Equipment, Measurement Instruments, Fuel, and Analytical Gas Specifications

1066.101 Overview.
1066.105 Ambient controls and vehicle cooling fans.
1066.110 Equipment specifications for emission sampling systems.
1066.120 Measurement instruments.
1066.125 Data updating, recording, and control.
1066.130 Measurement instrument calibrations and verifications.
1066.135 Linearity verification.
1066.140 Diluted exhaust flow calibration.
1066.145 Test fuel, engine fluids, analytical gases, and other calibration standards.
1066.150 Analyzer interference and quench verification limit.

Subpart C—Dynamometer Specifications

1066.201 Dynamometer overview.